LM60/LM60-Q1 2.7V, SOT-23 or TO-92 Temperature Sensor

Check for Samples: LM60/LM60-Q1

FEATURES

- **Calibrated linear scale factor of +6.25 mV/°C**
- **Rated for full −40°C to +125°C range**
- **Suitable for remote applications**
- **Available in SOT-23 and TO-92 packages**
- **LM60Q is AEC-Q100 Grade 1 qualified and is manufactured on an Automotive Grade flow.**

APPLICATIONS

- **Automotive**
- **Cell Phones & Computers**
- **Power Supply Modules**
- **Battery Management**
- **FAX Machines & Printers**
- **HVAC & Disk Drives**
- **Appliances**

KEY SPECIFICATIONS

- **Accuracy at 25°C: ±2.0°C and ±3.0°C (max)**
- **Accuracy for −40°C to +125°C: ±4.0°C (max)**
- **Accuracy for −25°C to +125°C: ±3.0°C (max)**
- **Temperature Slope: +6.25mV/°C**
- **Power Supply Voltage Range: +2.7V to +10V**
- **Current Drain at 25°C: 110µA (max)**
- **Nonlinearity: ±0.8°C (max)**
- **Output Impedance: 800Ω (max)**

CONNECTION DIAGRAMS

SOT-23 (TOP VIEW)

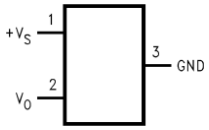

SVA-1268101

TO-92 (BOTTOM VIEW)

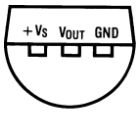

BOTTOM VIEW

SVA-1268123

DESCRIPTION

The LM60/LM60-Q1 is a precision integrated-circuit temperature sensor that can sense a −40°C to +125°C temperature range while operating from a single +2.7V supply. The LM60/LM60-Q1's output voltage is linearly proportional to Celsius (Centigrade) temperature (+6.25 mV/°C) and has a DC offset of +424 mV. The offset allows reading negative temperatures without the need for a negative supply. The nominal output voltage of the LM60/LM60-Q1 ranges from +174 mV to +1205 mV for a −40°C to +125°C temperature range. The LM60/LM60-Q1 is calibrated to provide accuracies of ±2.0°C at room temperature and ±3°C over the full −25°C to +125°C temperature range.

The LM60/LM60-Q1's linear output, +424 mV offset, and factory calibration simplify external circuitry required in a single supply environment where reading negative temperatures is required. Because the LM60/LM60-Q1's quiescent current is less than 110 µA, self-heating is limited to a very low 0.1°C in still air in the SOT-23 package. Shutdown capability for the LM60/LM60-Q1 is intrinsic because its inherent low power consumption allows it to be powered directly from the output of many logic gates.

TYPICAL APPLICATION

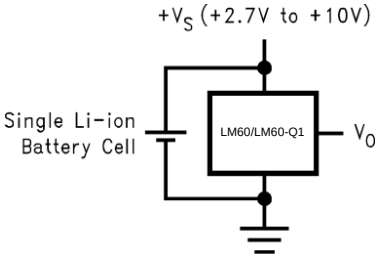

SVA-1268102

V_O = (+6.25 mV/°C × T°C) + 424 mV

Temperature (T)	Typical VO
+125°C	+1205 mV
+100°C	+1049 mV
+25°C	+580 mV
0°C	+424 mV
–25°C	+268 mV
–40°C	+174 mV

Figure 1. Full-Range Centigrade Temperature Sensor (−40°C to 125°C) Operating from a Single Li-Ion Battery Cell

Please be aware that an important notice concerning availability, standard warranty, and use in critical applications of Texas Instruments semiconductor products and disclaimers thereto appears at the end of this data sheet.

PRODUCTION DATA information is current as of publication date. Products conform to specifications per the terms of the Texas Instruments standard warranty. Production processing does not necessarily include testing of all parameters.

Copyright © 2004–2012, Texas Instruments Incorporated

These devices have limited built-in ESD protection. The leads should be shorted together or the device placed in conductive foam during storage or handling to prevent electrostatic damage to the MOS gates.

ORDERING INFORMATION

ORDER NUMBER	DEVICE TOP MARK	ACCURACY OVER SPECIFIED TEMPERATURE RANGE	SPECIFIED TEMPERATURE RANGE
LM60BIM3	T6B	±3	–25°C ≤ T_A ≤ +125°C
LM60BIM3X	T6B		
LM60CIM3	T6C	±4	–40°C ≤ T_A ≤ +125°C
LM60CIM3X	T6C		
LM60QIM3	L60Q	±4	–40°C ≤ T_A ≤ +125°C
LM60QIM3X	L60Q		
LM60BIZ	LM60BIZ	±3	–25°C ≤ TA ≤ +125°C
LM60CIZ	LM60CIZ	±4	–40°C ≤ TA ≤ +125°C

ABSOLUTE MAXIMUM RATINGS(1)

over operating free-air temperature range (unless otherwise noted)

			VALUE	UNIT
Supply voltage			+12 to −0.2	V
Output voltage			(+V_S + 0.6) to −0.6	V
Output current			10	mA
Input Current at any pin (2)			5	mA
ESD Susceptibility(3)	Human Body Model		2500	V
	Machine Model	SOT-23	250	V
		TO-92	200	V
Storage temperature			−65 to +150	°C
Maximum junction temperature (T_{JMAX})			125	°C

(1) Absolute Maximum Ratings indicate limits beyond which damage to the device may occur. Operating Ratings indicate conditions for which the device is functional, but do **not** guarantee specific performance limits. For specified specifications and test conditions, see the Electrical Characteristics. The specified specifications apply only for the test conditions listed. Some performance characteristics may degrade when the device is not operated under the listed test conditions.
(2) When the input voltage (V_I) at any pin exceeds power supplies (V_I < GND or V_I > +V_S), the current at that pin should be limited to 5 mA.
(3) The human body model is a 100 pF capacitor discharged through a 1.5 kΩ resistor into each pin. The machine model is a 200 pF capacitor discharged directly into each pin.

RECOMMENDED OPERATING CONDITIONS(1)

over operating free-air temperature range (unless otherwise noted)

		MIN	NOM	MAX	UNIT
Specified Temperature Range:	T_{MIN} ≤ T_A ≤ T_{MAX}				
	LM60B			–25 ≤ T_A ≤ +125	°C
	LM60C/LM60-Q1			–40 ≤ T_A ≤ +125	°C
Supply Voltage Range (+V_S)		2.7		10	V
Thermal Resistance, θ_{JA} (2)	SOT-23			450	°C/W
	TO-92			180	°C/W

(1) Absolute Maximum Ratings indicate limits beyond which damage to the device may occur. Operating Ratings indicate conditions for which the device is functional, but do **not** guarantee specific performance limits. For specified specifications and test conditions, see the Electrical Characteristics. The specified specifications apply only for the test conditions listed. Some performance characteristics may degrade when the device is not operated under the listed test conditions.
(2) The junction to ambient thermal resistance (θ_{JA}) is specified without a heat sink in still air.

Copyright © 2004–2012, Texas Instruments Incorporated

ELECTRICAL CHARACTERISTICS

Unless otherwise noted, these specifications apply for $+V_S$ = +3.0 V_{DC} and I_{LOAD} = 1 μA. **Boldface limits apply for $T_A = T_J = T_{MIN}$ to T_{MAX}**; all other limits $T_A = T_J$ = 25°C.

PARAMETER	CONDITIONS	TYPICAL (1)	LM60B Limits (2)	LM60C/LM60-Q1 Limits (2)	UNITS (Limit)
Accuracy (3)			±2.0	±3.0	°C (max)
			±3.0	**±4.0**	°C (max)
Output Voltage at 0°C		+424			mV
Nonlinearity (4)			**±0.6**	**±0.8**	°C (max)
Sensor Gain (Average Slope)		+6.25	**6.06**	**6**	mV/°C (min)
			6.44	**6.5**	mV/°C (max)
Output Impedance			**800**	**800**	Ω (max)
Line Regulation (5)	+3.0 V ≤ $+V_S$ ≤ +10 V		**±0.3**	**±0.3**	mV/V (max)
	+2.7 V ≤ $+V_S$ ≤ +3.3 V		**±2.3**	**±2.3**	mV (max)
Quiescent Current	+2.7 V ≤ $+V_S$ ≤ +10 V	82	110	110	μA (max)
			125	**125**	μA (max)
Change of Quiescent Current	+2.7 V ≤ $+V_S$ ≤ +10 V	±5.0			μA (max)
Temperature Coefficient of Quiescent Current		0.2			μA/°C
Long Term Stability (6)	$T_J = T_{MAX}$ = +125°C for 1000 hours	±0.2			°C

(1) Typicals are at $T_J = T_A$ = 25°C and represent most likely parametric norm.
(2) Limits are specified to National's AOQL (Average Outgoing Quality Level).
(3) Accuracy is defined as the error between the output voltage and +6.25 mV/°C times the device's case temperature plus 424 mV, at specified conditions of voltage, current, and temperature (expressed in °C).
(4) Nonlinearity is defined as the deviation of the output-voltage-versus-temperature curve from the best-fit straight line, over the device's rated temperature range.
(5) Regulation is measured at constant junction temperature, using pulse testing with a low duty cycle. Changes in output due to heating effects can be computed by multiplying the internal dissipation by the thermal resistance.
(6) For best long-term stability, any precision circuit will give best results if the unit is aged at a warm temperature, and/or temperature cycled for at least 46 hours before long-term life test begins. This is especially true when a small (Surface-Mount) part is wave-soldered; allow time for stress relaxation to occur. The majority of the drift will occur in the first 1000 hours at elevated temperatures. The drift after 1000 hours will not continue at the first 1000 hour rate.

Copyright © 2004–2012, Texas Instruments Incorporated

TYPICAL CHARACTERISTICS

To generate these curves the LM60/LM60-Q1 was mounted to a printed circuit board as shown in Figure 13.

Thermal Resistance Junction to Air

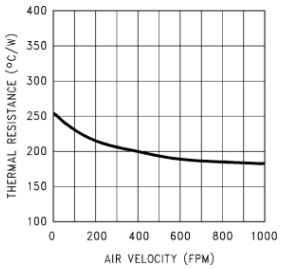

SVA-1268103

Figure 2.

Thermal Time Constant

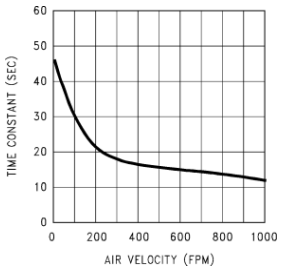

SVA-1268104

Figure 3.

Thermal Response in Still Air with Heat Sink

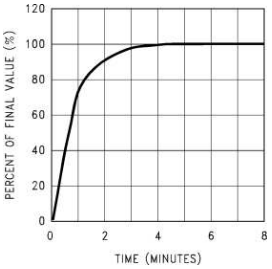

SVA-1268105

Figure 4.

Thermal Response in Stirred Oil Bath with Heat Sink

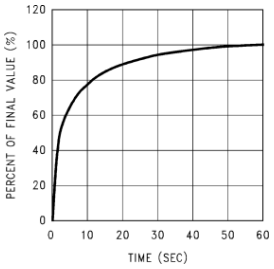

SVA-1268106

Figure 5.

Start-Up Voltage vs Temperature

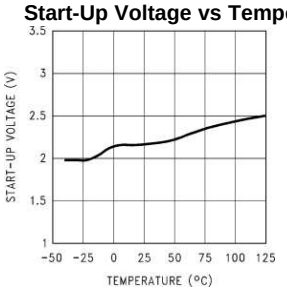

SVA-1268107

Figure 6.

Thermal Response in Still Air without a Heat Sink

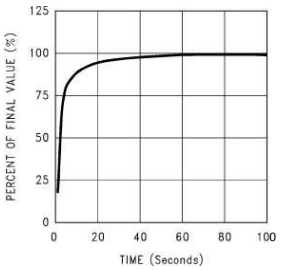

SVA-1268108

Figure 7.

Quiescent Current vs Temperature

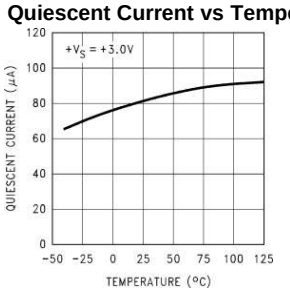

SVA-1268109

Figure 8.

Accuracy vs Temperature

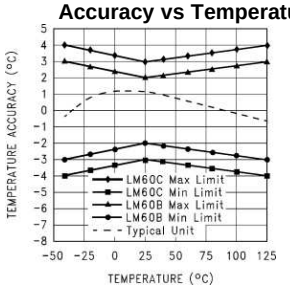

SVA-1268110

Figure 9.

Copyright © 2004–2012, Texas Instruments Incorporated

TYPICAL CHARACTERISTICS (continued)

To generate these curves the LM60/LM60-Q1 was mounted to a printed circuit board as shown in Figure 13.

Noise Voltage

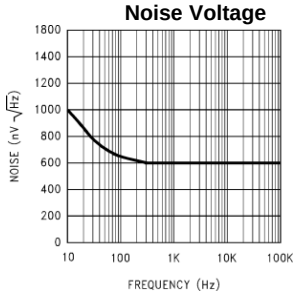

SVA-1268111

Figure 10.

Supply Voltage vs Supply Current

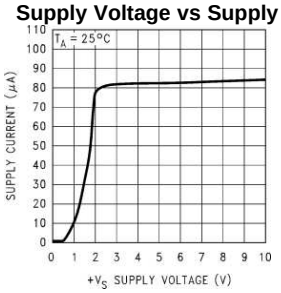

SVA-1268112

Figure 11.

Start-Up Response

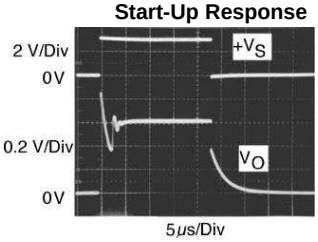

SVA-1268122

Figure 12.

APPLICATION INFORMATION

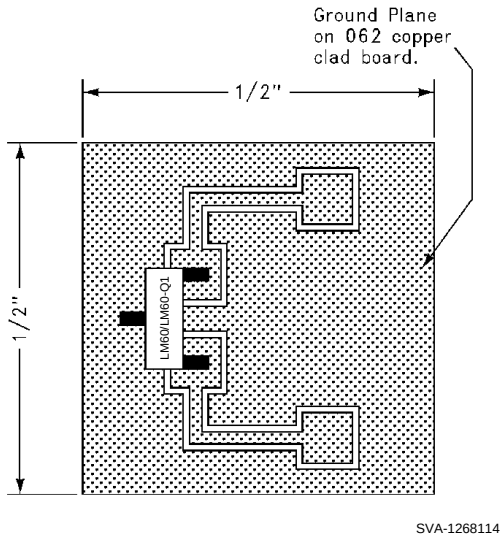

NOTE: 1/2" Square Printed Circuit Board with 2 oz. Copper Foil or Similar.

Figure 13. Printed Circuit Board Used for Heat Sink to Generate All Curves

Mounting

The LM60/LM60-Q1 can be applied easily in the same way as other integrated-circuit temperature sensors. It can be glued or cemented to a surface. The temperature that the LM60/LM60-Q1 is sensing will be within about +0.1°C of the surface temperature that LM60/LM60-Q1's leads are attached to.

This presumes that the ambient air temperature is almost the same as the surface temperature; if the air temperature were much higher or lower than the surface temperature, the actual temperature of the LM60/LM60-Q1 die would be at an intermediate temperature between the surface temperature and the air temperature.

To ensure good thermal conductivity the backside of the LM60/LM60-Q1 die is directly attached to the GND pin. The lands and traces to the LM60/LM60-Q1 will, of course, be part of the printed circuit board, which is the object whose temperature is being measured. These printed circuit board lands and traces will not cause the LM60/LM60-Q1's temperature to deviate from the desired temperature.

Alternatively, the LM60/LM60-Q1 can be mounted inside a sealed-end metal tube, and can then be dipped into a bath or screwed into a threaded hole in a tank. As with any IC, the LM60/LM60-Q1 and accompanying wiring and circuits must be kept insulated and dry, to avoid leakage and corrosion. This is especially true if the circuit may operate at cold temperatures where condensation can occur. Printed-circuit coatings and varnishes such as Humiseal and epoxy paints or dips are often used to ensure that moisture cannot corrode the LM60/LM60-Q1 or its connections.

The thermal resistance junction to ambient (θ_{JA}) is the parameter used to calculate the rise of a device junction temperature due to the device power dissipation. For the LM60/LM60-Q1 the equation used to calculate the rise in the die temperature is as follows:

$$T_J = T_A + \theta_{JA} [(+V_S I_Q) + (+V_S - V_O) I_L]$$

where I_Q is the quiescent current and I_L is the load current on the output.

Table 1 summarizes the rise in die temperature of the LM60/LM60-Q1 without any loading, and the thermal resistance for different conditions.

Copyright © 2004–2012, Texas Instruments Incorporated

Table 1. Temperature Rise of LM60/LM60-Q1 Due to Self-Heating and Thermal Resistance (θ_{JA})

	SOT-23 (1) no heat sink		SOT-23 (2) small heat fin		TO-92 (1) no heat fin		TO-92 (3) small heat fin	
	θ_{JA} (°C/W)	$T_J - T_A$ (°C)	θJ_A (°C/W)	$T_J - T_A$ (°C)	θJ_A	$T_J - T_A$	θJ_A	$T_J - T_A$
Still air	450	0.17	260	0.1	180	0.07	140	0.05
Moving air			180	0.07	90	0.034	70	0.026

(1) Part soldered to 30 gauge wire.
(2) Heat sink used is 1/2" square printed circuit board with 2 oz. foil with part attached as shown in Figure 13.
(3) Part glued or leads soldered to 1" square of 1/16" printed circuit board with 2 oz. foil or similar.

Capacitive Loads

The LM60/LM60-Q1 handles capacitive loading well. Without any special precautions, the LM60/LM60-Q1 can drive any capacitive load as shown in Figure 14. Over the specified temperature range the LM60/LM60-Q1 has a maximum output impedance of 800Ω. In an extremely noisy environment it may be necessary to add some filtering to minimize noise pickup. It is recommended that 0.1 µF be added from +V S to GND to bypass the power supply voltage, as shown in Figure 15. In a noisy environment it may be necessary to add a capacitor from the output to ground. A 1 µF output capacitor with the 800Ω output impedance will form a 199 Hz lowpass filter. Since the thermal time constant of the LM60/LM60-Q1 is much slower than the 6.3 ms time constant formed by the RC, the overall response time of the LM60/LM60-Q1 will not be significantly affected. For much larger capacitors this additional time lag will increase the overall response time of the LM60/LM60-Q1.

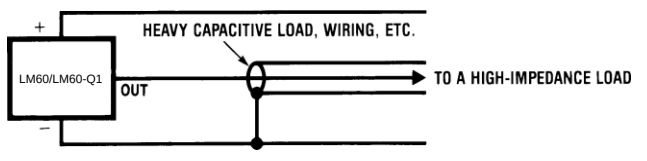

Figure 14. LM60/LM60-Q1 No Decoupling Required for Capacitive Load

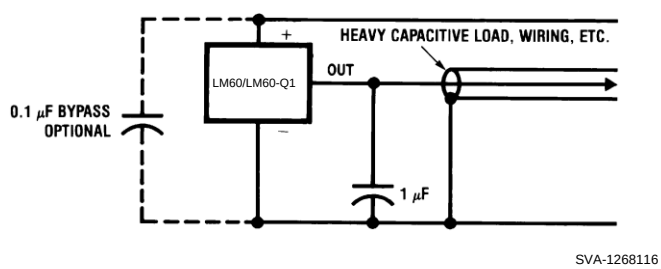

Figure 15. LM60/LM60-Q1 with Filter for Noisy Environment

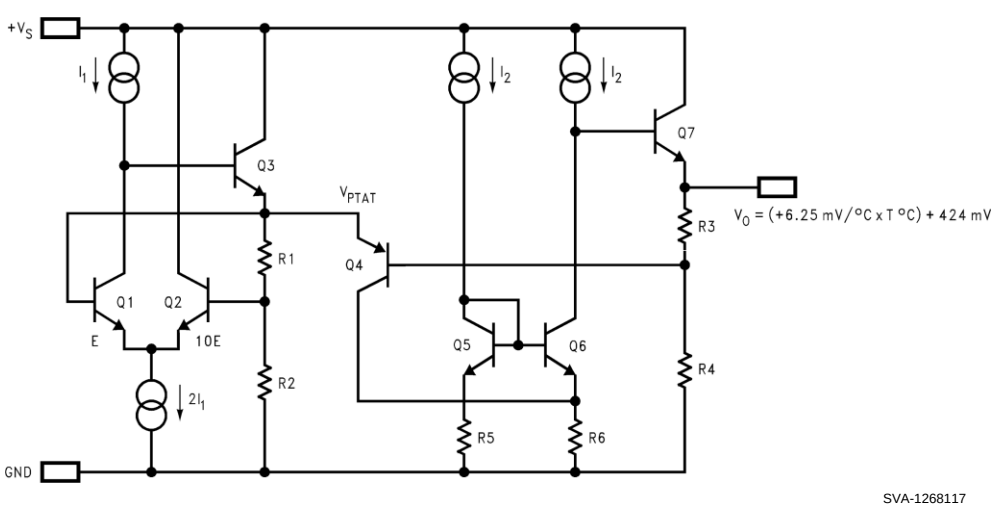

Figure 16. Simplified Schematic

Applications Circuits

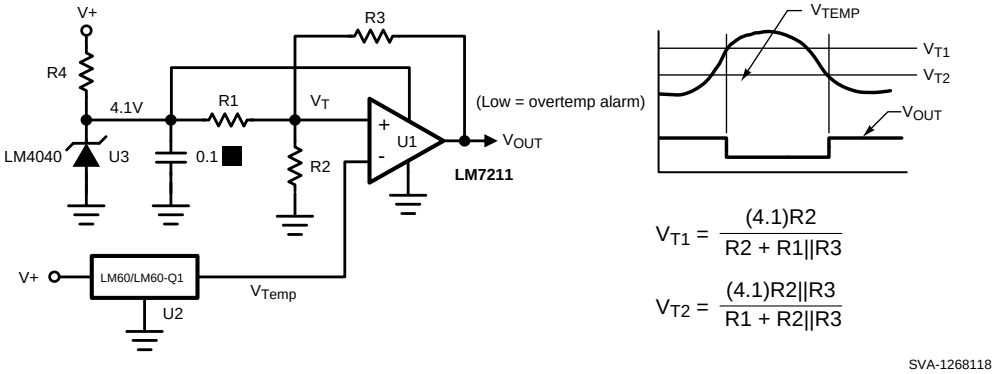

Figure 17. Centigrade Thermostat

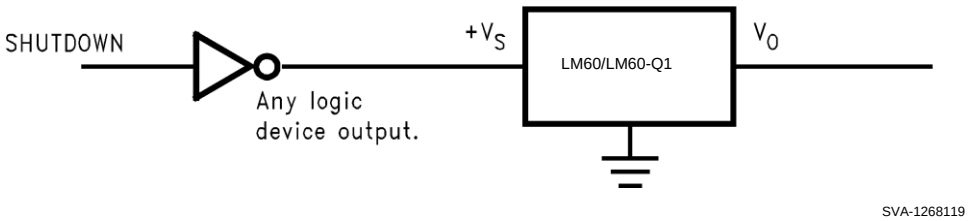

Figure 18. Conserving Power Dissipation with Shutdown

Copyright © 2004–2012, Texas Instruments Incorporated

PACKAGING INFORMATION

Orderable Device	Status (1)	Package Type	Package Drawing	Pins	Package Qty	Eco Plan (2)	Lead/Ball Finish (6)	MSL Peak Temp (3)	Op Temp (°C)	Device Marking (4/5)	Samples
LM60BIM3	NRND	SOT-23	DBZ	3	1000	TBD	Call TI	Call TI	-25 to 125	T6B	
LM60BIM3/NOPB	ACTIVE	SOT-23	DBZ	3	1000	Green (RoHS & no Sb/Br)	CU SN	Level-1-260C-UNLIM	-25 to 125	T6B	Samples
LM60BIM3X	NRND	SOT-23	DBZ	3	3000	TBD	Call TI	Call TI	-25 to 125	T6B	
LM60BIM3X/NOPB	ACTIVE	SOT-23	DBZ	3	3000	Green (RoHS & no Sb/Br)	CU SN	Level-1-260C-UNLIM	-25 to 125	T6B	Samples
LM60BIZ/LFT3	ACTIVE	TO-92	LP	3	2000	Green (RoHS & no Sb/Br)	SNCU | CU SN	N / A for Pkg Type		LM60 BIZ	Samples
LM60BIZ/NOPB	ACTIVE	TO-92	LP	3	1800	Green (RoHS & no Sb/Br)	SN | Call TI	N / A for Pkg Type	-25 to 125	LM60 BIZ	Samples
LM60CIM3	NRND	SOT-23	DBZ	3	1000	TBD	Call TI	Call TI	-40 to 125	T6C	
LM60CIM3/NOPB	ACTIVE	SOT-23	DBZ	3	1000	Green (RoHS & no Sb/Br)	CU SN	Level-1-260C-UNLIM	-40 to 125	T6C	Samples
LM60CIM3X	NRND	SOT-23	DBZ	3	3000	TBD	Call TI	Call TI	-40 to 125	T6C	
LM60CIM3X/NOPB	ACTIVE	SOT-23	DBZ	3	3000	Green (RoHS & no Sb/Br)	CU SN	Level-1-260C-UNLIM	-40 to 125	T6C	Samples
LM60CIZ/NOPB	ACTIVE	TO-92	LP	3	1800	Green (RoHS & no Sb/Br)	SN | Call TI	N / A for Pkg Type	-40 to 125	LM60 CIZ	Samples
LM60QIM3/NOPB	ACTIVE	SOT-23	DBZ	3	1000	Green (RoHS & no Sb/Br)	CU SN	Level-1-260C-UNLIM	-40 to 125	L60Q	Samples
LM60QIM3X/NOPB	ACTIVE	SOT-23	DBZ	3	3000	Green (RoHS & no Sb/Br)	CU SN	Level-1-260C-UNLIM	-40 to 125	L60Q	Samples

(1) The marketing status values are defined as follows:
ACTIVE: Product device recommended for new designs.
LIFEBUY: TI has announced that the device will be discontinued, and a lifetime-buy period is in effect.
NRND: Not recommended for new designs. Device is in production to support existing customers, but TI does not recommend using this part in a new design.
PREVIEW: Device has been announced but is not in production. Samples may or may not be available.
OBSOLETE: TI has discontinued the production of the device.

(2) Eco Plan - The planned eco-friendly classification: Pb-Free (RoHS), Pb-Free (RoHS Exempt), or Green (RoHS & no Sb/Br) - please check http://www.ti.com/productcontent for the latest availability information and additional product content details.
TBD: The Pb-Free/Green conversion plan has not been defined.
Pb-Free (RoHS): TI's terms "Lead-Free" or "Pb-Free" mean semiconductor products that are compatible with the current RoHS requirements for all 6 substances, including the requirement that lead not exceed 0.1% by weight in homogeneous materials. Where designed to be soldered at high temperatures, TI Pb-Free products are suitable for use in specified lead-free processes.

Pb-Free (RoHS Exempt): This component has a RoHS exemption for either 1) lead-based flip-chip solder bumps used between the die and package, or 2) lead-based die adhesive used between the die and leadframe. The component is otherwise considered Pb-Free (RoHS compatible) as defined above.
Green (RoHS & no Sb/Br): TI defines "Green" to mean Pb-Free (RoHS compatible), and free of Bromine (Br) and Antimony (Sb) based flame retardants (Br or Sb do not exceed 0.1% by weight in homogeneous material)

(3) MSL, Peak Temp. - The Moisture Sensitivity Level rating according to the JEDEC industry standard classifications, and peak solder temperature.

(4) There may be additional marking, which relates to the logo, the lot trace code information, or the environmental category on the device.

(5) Multiple Device Markings will be inside parentheses. Only one Device Marking contained in parentheses and separated by a "~" will appear on a device. If a line is indented then it is a continuation of the previous line and the two combined represent the entire Device Marking for that device.

(6) Lead/Ball Finish - Orderable Devices may have multiple material finish options. Finish options are separated by a vertical ruled line. Lead/Ball Finish values may wrap to two lines if the finish value exceeds the maximum column width.

Important Information and Disclaimer: The information provided on this page represents TI's knowledge and belief as of the date that it is provided. TI bases its knowledge and belief on information provided by third parties, and makes no representation or warranty as to the accuracy of such information. Efforts are underway to better integrate information from third parties. TI has taken and continues to take reasonable steps to provide representative and accurate information but may not have conducted destructive testing or chemical analysis on incoming materials and chemicals. TI and TI suppliers consider certain information to be proprietary, and thus CAS numbers and other limited information may not be available for release.

In no event shall TI's liability arising out of such information exceed the total purchase price of the TI part(s) at issue in this document sold by TI to Customer on an annual basis.

OTHER QUALIFIED VERSIONS OF LM60, LM60-Q1 :

- Catalog: LM60
- Automotive: LM60-Q1

NOTE: Qualified Version Definitions:

- Catalog - TI's standard catalog product
- Automotive - Q100 devices qualified for high-reliability automotive applications targeting zero defects

TAPE AND REEL INFORMATION

REEL DIMENSIONS

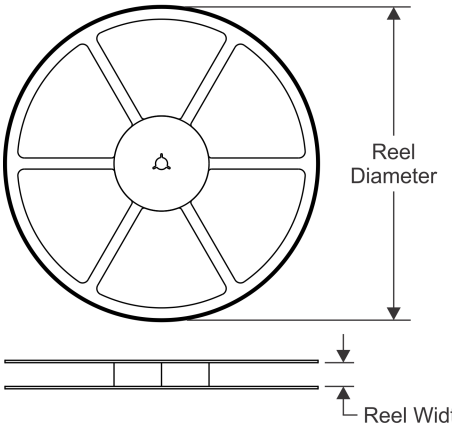

TAPE DIMENSIONS

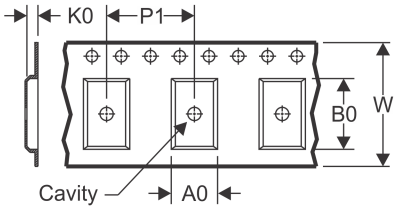

A0	Dimension designed to accommodate the component width
B0	Dimension designed to accommodate the component length
K0	Dimension designed to accommodate the component thickness
W	Overall width of the carrier tape
P1	Pitch between successive cavity centers

QUADRANT ASSIGNMENTS FOR PIN 1 ORIENTATION IN TAPE

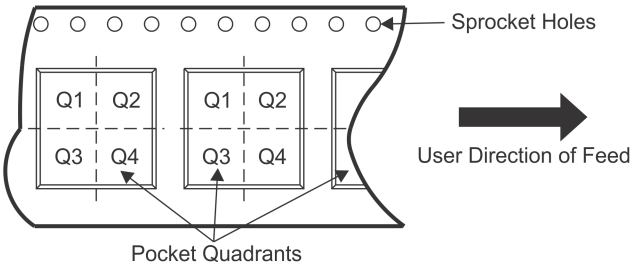

*All dimensions are nominal

Device	Package Type	Package Drawing	Pins	SPQ	Reel Diameter (mm)	Reel Width W1 (mm)	A0 (mm)	B0 (mm)	K0 (mm)	P1 (mm)	W (mm)	Pin1 Quadrant
LM60BIM3	SOT-23	DBZ	3	1000	178.0	8.4	3.3	2.9	1.22	4.0	8.0	Q3
LM60BIM3X	SOT-23	DBZ	3	3000	178.0	8.4	3.3	2.9	1.22	4.0	8.0	Q3
LM60CIM3	SOT-23	DBZ	3	1000	178.0	8.4	3.3	2.9	1.22	4.0	8.0	Q3
LM60CIM3X	SOT-23	DBZ	3	3000	178.0	8.4	3.3	2.9	1.22	4.0	8.0	Q3
LM60QIM3/NOPB	SOT-23	DBZ	3	1000	178.0	8.4	3.3	2.9	1.22	4.0	8.0	Q3
LM60QIM3X/NOPB	SOT-23	DBZ	3	3000	178.0	8.4	3.3	2.9	1.22	4.0	8.0	Q3

TAPE AND REEL BOX DIMENSIONS

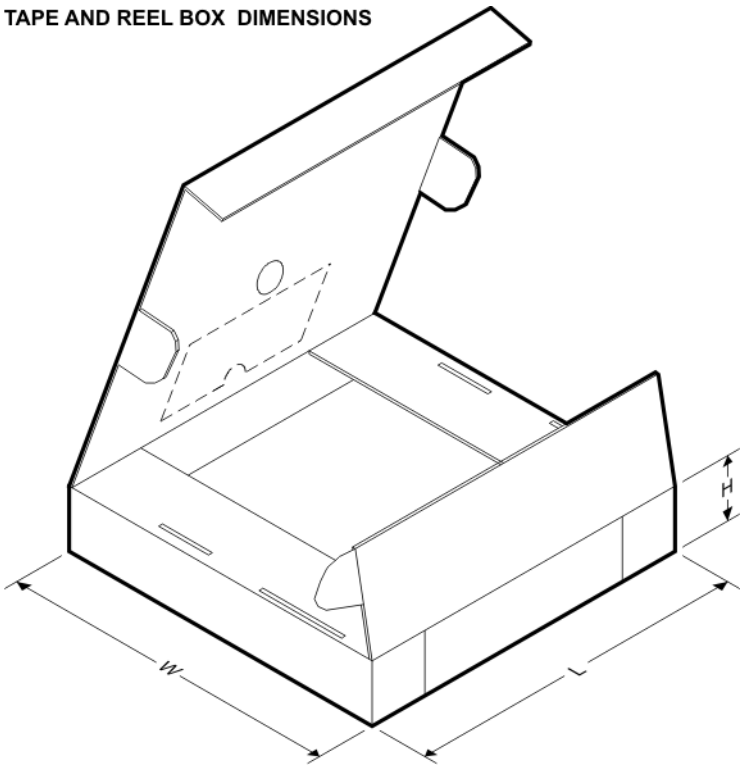

*All dimensions are nominal

Device	Package Type	Package Drawing	Pins	SPQ	Length (mm)	Width (mm)	Height (mm)
LM60BIM3	SOT-23	DBZ	3	1000	210.0	185.0	35.0
LM60BIM3X	SOT-23	DBZ	3	3000	210.0	185.0	35.0
LM60CIM3	SOT-23	DBZ	3	1000	210.0	185.0	35.0
LM60CIM3X	SOT-23	DBZ	3	3000	210.0	185.0	35.0
LM60QIM3/NOPB	SOT-23	DBZ	3	1000	210.0	185.0	35.0
LM60QIM3X/NOPB	SOT-23	DBZ	3	3000	210.0	185.0	35.0

DBZ (R–PDSO–G3) PLASTIC SMALL–OUTLINE

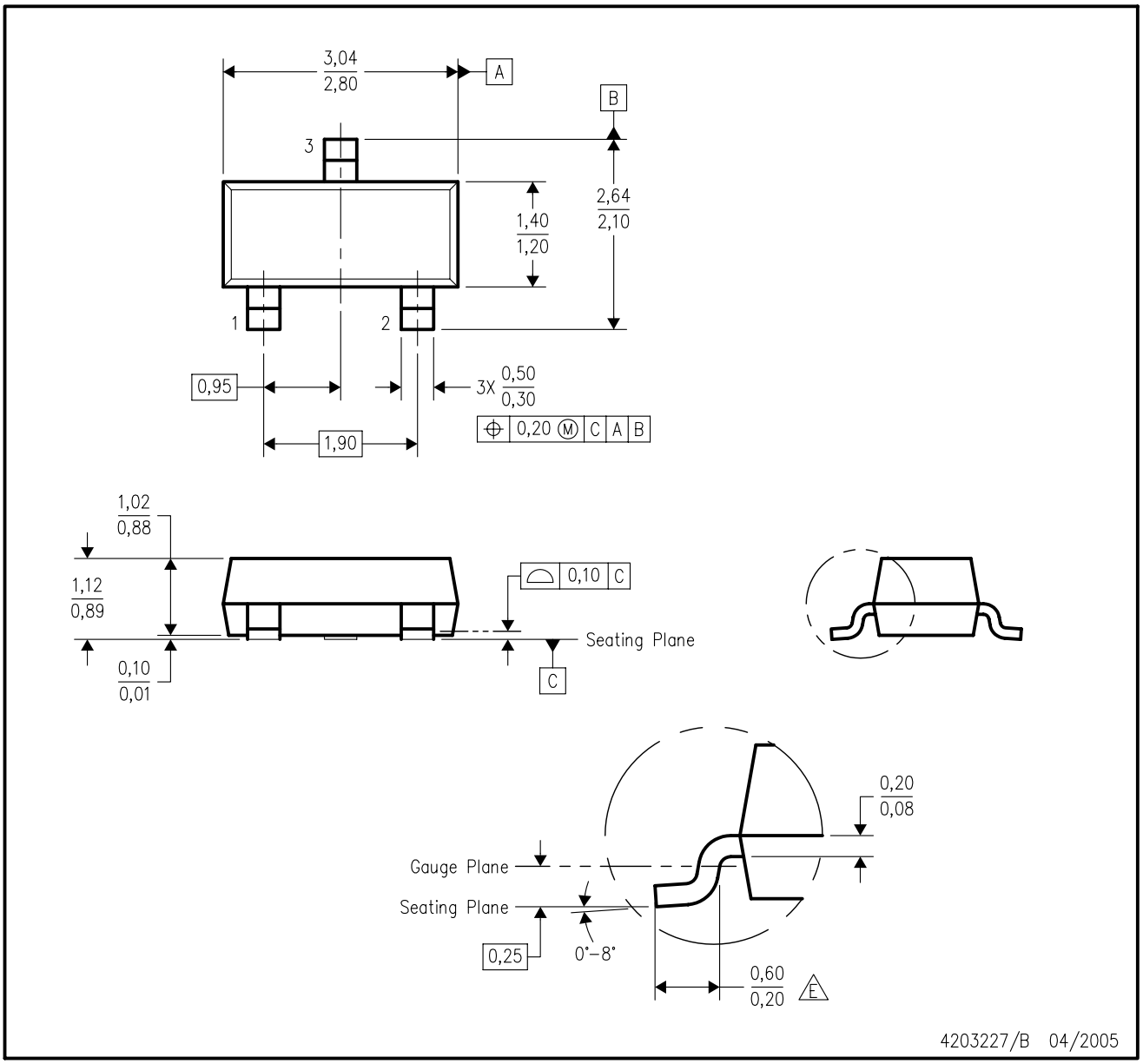

NOTES:
A. All linear dimensions are in millimeters. Dimensioning and tolerancing per ASME Y14.5M–1994.
B. This drawing is subject to change without notice.
C. Lead dimensions are inclusive of plating.
D. Body dimensions are exclusive of mold flash and protrusion. Mold flash and protrusion not to exceed 0.25 per side.
E. Falls within JEDEC TO–236 variation AB, except minimum foot length.

LP (O–PBCY–W3) PLASTIC CYLINDRICAL PACKAGE

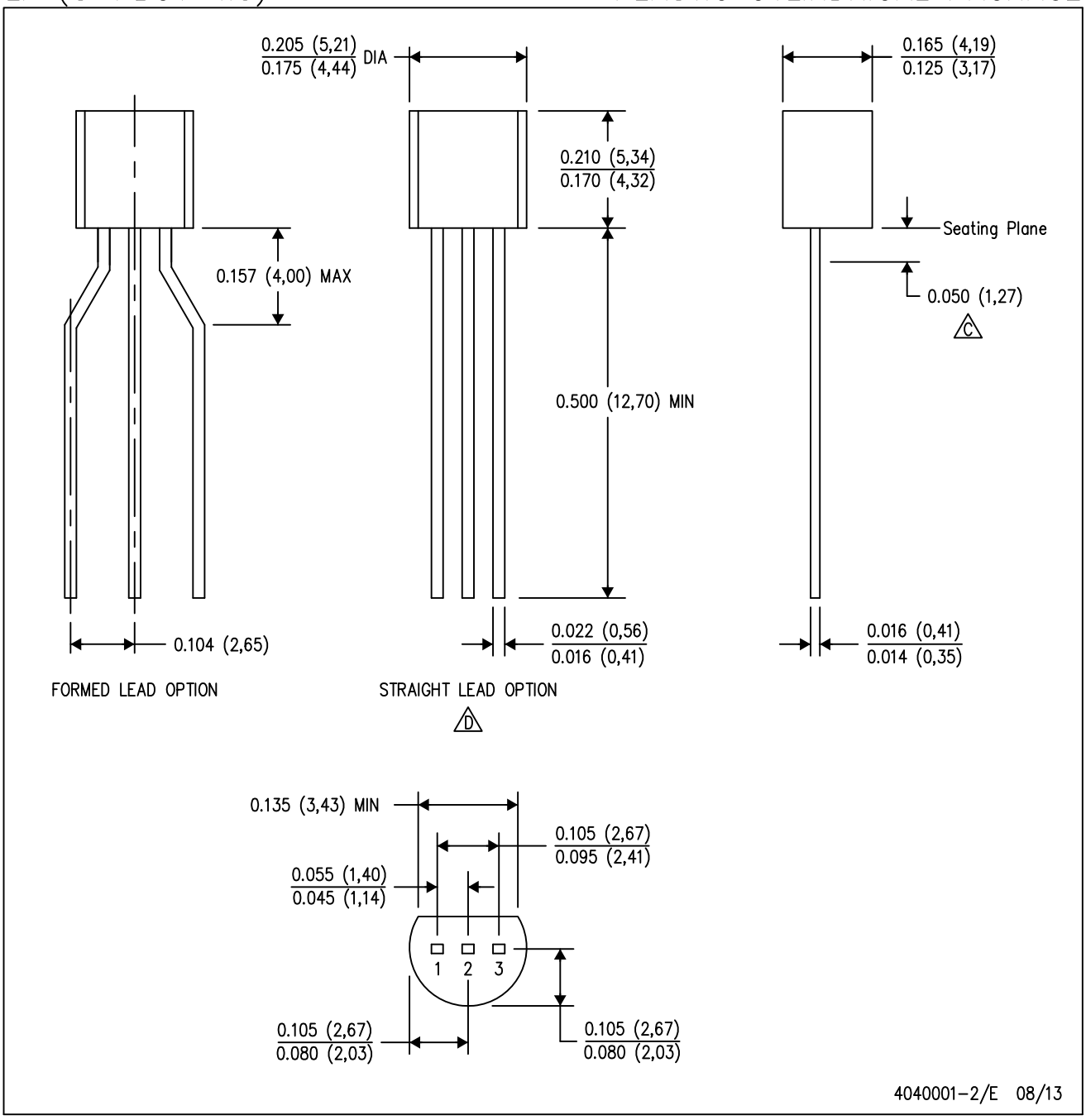

NOTES: A. All linear dimensions are in inches (millimeters).
B. This drawing is subject to change without notice.
C. Lead dimensions are not controlled within this area.
D. Falls within JEDEC TO–226 Variation AA (TO–226 replaces TO–92).
E. Shipping Method:
Straight lead option available in bulk pack only.
Formed lead option available in tape & reel or ammo pack.
Specific products can be offered in limited combinations of shipping mediums and lead options.
Consult product folder for more information on available options.

LP (O–PBCY–W3) PLASTIC CYLINDRICAL PACKAGE

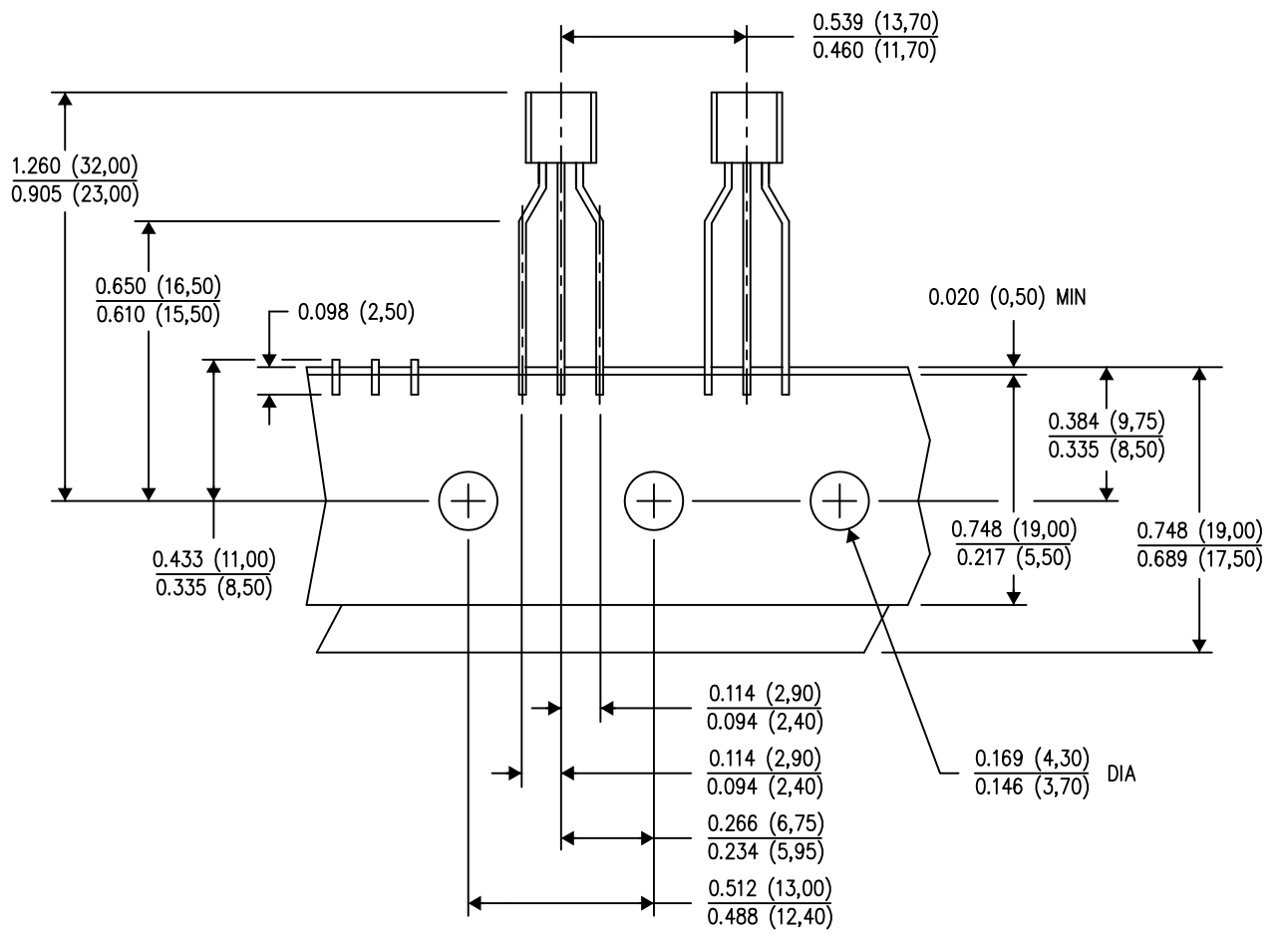

TAPE & REEL

4040001–3/E 08/13

NOTES:
A. All linear dimensions are in inches (millimeters).
B. This drawing is subject to change without notice.
C. Tape and Reel information for the Formed Lead Option package.

IMPORTANT NOTICE

Texas Instruments Incorporated and its subsidiaries (TI) reserve the right to make corrections, enhancements, improvements and other changes to its semiconductor products and services per JESD46, latest issue, and to discontinue any product or service per JESD48, latest issue. Buyers should obtain the latest relevant information before placing orders and should verify that such information is current and complete. All semiconductor products (also referred to herein as “components”) are sold subject to TI’s terms and conditions of sale supplied at the time of order acknowledgment.

TI warrants performance of its components to the specifications applicable at the time of sale, in accordance with the warranty in TI’s terms and conditions of sale of semiconductor products. Testing and other quality control techniques are used to the extent TI deems necessary to support this warranty. Except where mandated by applicable law, testing of all parameters of each component is not necessarily performed.

TI assumes no liability for applications assistance or the design of Buyers’ products. Buyers are responsible for their products and applications using TI components. To minimize the risks associated with Buyers’ products and applications, Buyers should provide adequate design and operating safeguards.

TI does not warrant or represent that any license, either express or implied, is granted under any patent right, copyright, mask work right, or other intellectual property right relating to any combination, machine, or process in which TI components or services are used. Information published by TI regarding third-party products or services does not constitute a license to use such products or services or a warranty or endorsement thereof. Use of such information may require a license from a third party under the patents or other intellectual property of the third party, or a license from TI under the patents or other intellectual property of TI.

Reproduction of significant portions of TI information in TI data books or data sheets is permissible only if reproduction is without alteration and is accompanied by all associated warranties, conditions, limitations, and notices. TI is not responsible or liable for such altered documentation. Information of third parties may be subject to additional restrictions.

Resale of TI components or services with statements different from or beyond the parameters stated by TI for that component or service voids all express and any implied warranties for the associated TI component or service and is an unfair and deceptive business practice. TI is not responsible or liable for any such statements.

Buyer acknowledges and agrees that it is solely responsible for compliance with all legal, regulatory and safety-related requirements concerning its products, and any use of TI components in its applications, notwithstanding any applications-related information or support that may be provided by TI. Buyer represents and agrees that it has all the necessary expertise to create and implement safeguards which anticipate dangerous consequences of failures, monitor failures and their consequences, lessen the likelihood of failures that might cause harm and take appropriate remedial actions. Buyer will fully indemnify TI and its representatives against any damages arising out of the use of any TI components in safety-critical applications.

In some cases, TI components may be promoted specifically to facilitate safety-related applications. With such components, TI’s goal is to help enable customers to design and create their own end-product solutions that meet applicable functional safety standards and requirements. Nonetheless, such components are subject to these terms.

No TI components are authorized for use in FDA Class III (or similar life-critical medical equipment) unless authorized officers of the parties have executed a special agreement specifically governing such use.

Only those TI components which TI has specifically designated as military grade or “enhanced plastic” are designed and intended for use in military/aerospace applications or environments. Buyer acknowledges and agrees that any military or aerospace use of TI components which have ***not*** been so designated is solely at the Buyer's risk, and that Buyer is solely responsible for compliance with all legal and regulatory requirements in connection with such use.

TI has specifically designated certain components as meeting ISO/TS16949 requirements, mainly for automotive use. In any case of use of non-designated products, TI will not be responsible for any failure to meet ISO/TS16949.

Products		**Applications**	
Audio	www.ti.com/audio	Automotive and Transportation	www.ti.com/automotive
Amplifiers	amplifier.ti.com	Communications and Telecom	www.ti.com/communications
Data Converters	dataconverter.ti.com	Computers and Peripherals	www.ti.com/computers
DLP® Products	www.dlp.com	Consumer Electronics	www.ti.com/consumer-apps
DSP	dsp.ti.com	Energy and Lighting	www.ti.com/energy
Clocks and Timers	www.ti.com/clocks	Industrial	www.ti.com/industrial
Interface	interface.ti.com	Medical	www.ti.com/medical
Logic	logic.ti.com	Security	www.ti.com/security
Power Mgmt	power.ti.com	Space, Avionics and Defense	www.ti.com/space-avionics-defense
Microcontrollers	microcontroller.ti.com	Video and Imaging	www.ti.com/video
RFID	www.ti-rfid.com		
OMAP Applications Processors	www.ti.com/omap	**TI E2E Community**	e2e.ti.com
Wireless Connectivity	www.ti.com/wirelessconnectivity		

Mailing Address: Texas Instruments, Post Office Box 655303, Dallas, Texas 75265
Copyright © 2014, Texas Instruments Incorporated