MCP9808

±0.5°C Maximum Accuracy Digital Temperature Sensor

Features

- Accuracy:
  - ±0.25 (typical) from -40°C to +125°C
  - ±0.5°C (maximum) from -20°C to 100°C
  - ±1°C (maximum) from -40°C to +125°C
- User-Selectable Measurement Resolution:
  - +0.5°C, +0.25°C, +0.125°C, +0.0625°C
- User-Programmable Temperature Limits:
  - Temperature Window Limit
  - Critical Temperature Limit
- User-Programmable Temperature Alert Output
- Operating Voltage Range: 2.7V to 5.5V
- Operating Current: 200 µA (typical)
- Shutdown Current: 0.1 µA (typical)
- 2-wire Interface: I^2C™/SMBus Compatible
- Available Packages: 2x3 DFN-8, MSOP-8

Typical Applications

- General Purpose
- Industrial Applications
- Industrial Freezers and Refrigerators
- Food Processing
- Personal Computers and Servers
- PC Peripherals
- Consumer Electronics
- Handheld/Portable Devices

Temperature Accuracy

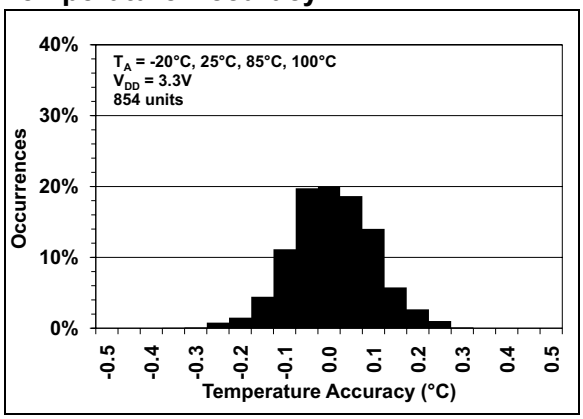

Description

Microchip Technology Inc.'s MCP9808 digital temperature sensor converts temperatures between -20°C and +100°C to a digital word with ±0.25°C/±0.5°C (typical/maximum) accuracy.

The MCP9808 comes with user-programmable registers that provide flexibility for temperature sensing applications. The registers allow user-selectable settings such as Shutdown or Low-Power modes and the specification of temperature Alert window limits and critical output limits. When the temperature changes beyond the specified boundary limits, the MCP9808 outputs an Alert signal. The user has the option of setting the Alert output signal polarity as an active-low or active-high comparator output for thermostat operation, or as a temperature Alert interrupt output for microprocessor-based systems. The Alert output can also be configured as a critical temperature output only.

This sensor has an industry standard 400 kHz, 2-wire, SMBus/I^2C compatible serial interface, allowing up to eight or sixteen sensors to be controlled with a single serial bus (see Table 3-2 for available Address codes). These features make the MCP9808 ideal for sophisticated, multi-zone, temperature-monitoring applications.

Package Types

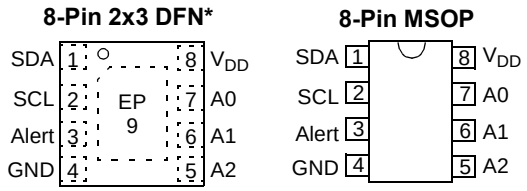

* Includes Exposed Thermal Pad (EP); see Table 3-1.

© 2011 Microchip Technology Inc.

Functional Block Diagram

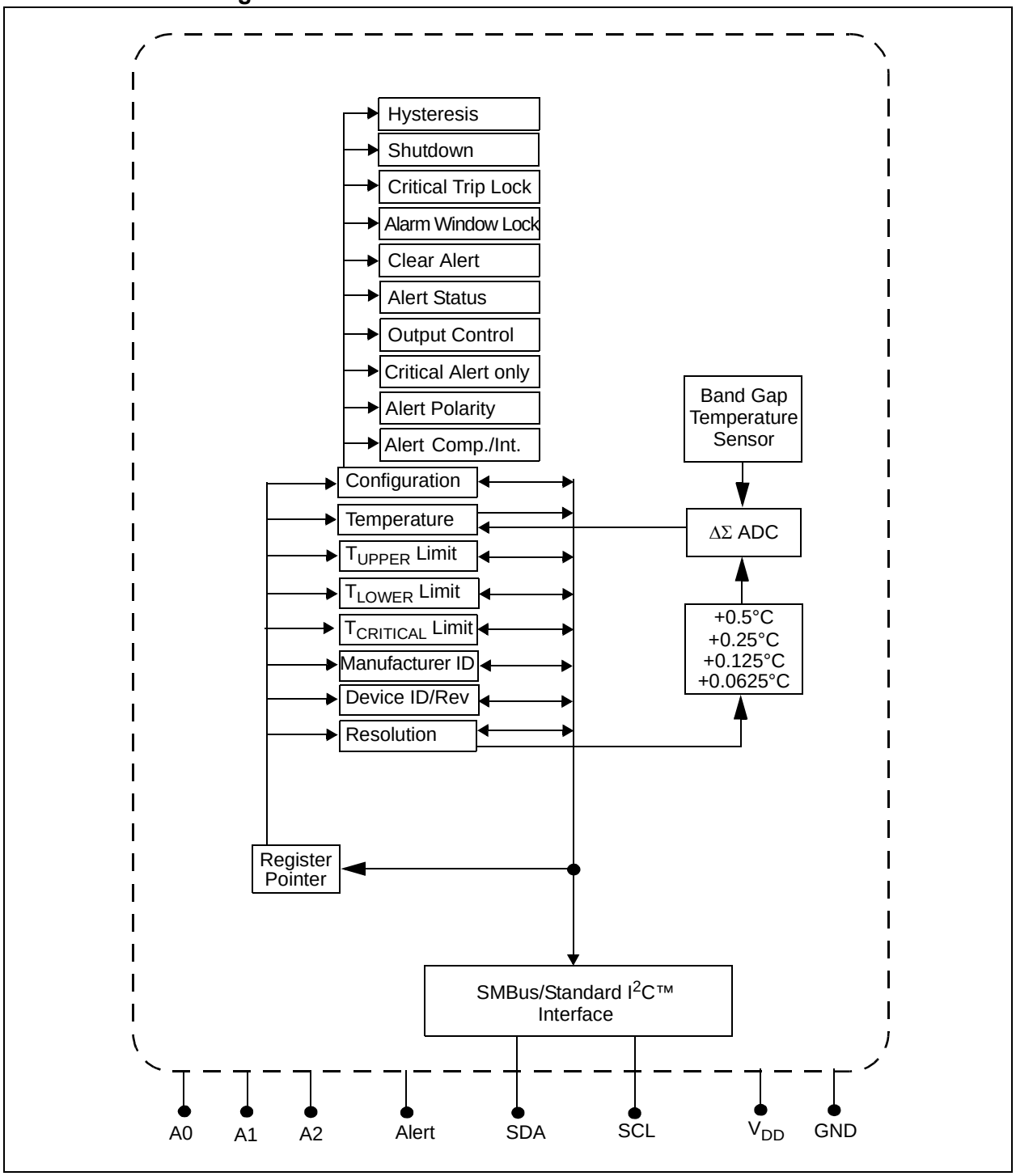

© 2011 Microchip Technology Inc.

1.0 ELECTRICAL CHARACTERISTICS

Absolute Maximum Ratings †

V_{DD} 6.0V
Voltage at All Input/Output Pins ..... GND – 0.3V to 6.0V
Storage Temperature .....-65°C to +150°C
Ambient Temperature with Power Applied ....-40°C to +125°C
Junction Temperature (T_J) .....+150°C
ESD Protection on All Pins (HBM:MM) ..... (4 kV:400V)
Latch-up Current at Each Pin (+25°C) ..... ±200 mA

†Notice: Stresses above those listed under "Maximum ratings" may cause permanent damage to the device. This is a stress rating only and functional operation of the device at those or any other conditions above those indicated in the operational listings of this specification is not implied. Exposure to maximum rating conditions for extended periods may affect device reliability.

TEMPERATURE SENSOR DC CHARACTERISTICS

Electrical Specifications: Unless otherwise indicated, V_{DD} = 2.7V to 5.5V, GND = Ground and T_A = -40°C to +125°C.

Parameters	Sym	Min	Typ	Max	Unit	Conditions
Temperature Sensor Accuracy						
-20°C < T_A ≤ +100°C	T_{ACY}	-0.5	±0.25	+0.5	°C	V_{DD} = 3.3V
-40°C < T_A ≤ +125°C	T_{ACY}	-1.0	±0.25	+1.0	°C	V_{DD} = 3.3V
Temperature Conversion Time						
0.5°C/bit	t_{CONV}	—	30	—	ms	33s/sec (typical)
0.25°C/bit		—	65	—	ms	15s/sec (typical)
0.125°C/bit		—	130	—	ms	7s/sec (typical)
0.0625°C/bit		—	250	—	ms	4s/sec (typical)
Power Supply						
Operating Voltage Range	V_{DD}	2.7	—	5.5	V	
Operating Current	I_{DD}	—	200	400	µA	
Shutdown Current	I_{SHDN}	—	0.1	2	µA	
Power-on Reset (POR)	V_{POR}	—	2.2	—	V	Threshold for falling V_{DD}
Power Supply Rejection	$\Delta°C/\Delta V_{DD}$	—	-0.1	—	°C/V	V_{DD} = 2.7V to 5.5V, T_A = +25°C
Alert Output (open-drain output, external pull-up resistor required), see Section 5.2.3 "Alert Output Configuration"						
High-Level Current (leakage)	I_{OH}	—	—	1	µA	V_{OH} = V_{DD} (Active-Low, Pull-up Resistor)
Low-Level Voltage	V_{OL}	—	—	0.4	V	I_{OL}= 3 mA (Active-Low, Pull-up Resistor)
Thermal Response, from +25°C (air) to +125°C (oil bath)						
8L-DFN	t_{RES}	—	0.7	—	s	Time to 63% (+89°C)
8L-MSOP		—	1.4	—	s	

DIGITAL INPUT/OUTPUT PIN CHARACTERISTICS

Electrical Specifications: Unless otherwise indicated, V_{DD} = 2.7V to 5.5V, GND = Ground and T_A = -40°C to +125°C.

Parameters	Sym	Min	Typ	Max	Units	Conditions
Serial Input/Output (SCL, SDA, A0, A1, A2)						
Input						
High-Level Voltage	V_{IH}	0.7 V_{DD}	—	V_{DD}	V	
Low-Level Voltage	V_{IL}	GND	—	0.3 V_{DD}	V	
Input Current	I_{IN}	—	—	±5	µA	
Output (SDA)						
Low-Level Voltage	V_{OL}	—	—	0.4	V	I_{OL}= 3 mA
High-Level Current (leakage)	I_{OH}	—	—	1	µA	V_{OH} = 5.5V
Low-Level Current	I_{OL}	6	—	—	mA	V_{OL} = 0.6V
SDA and SCL Inputs						
Hysteresis	V_{HYST}	—	0.05 V_{DD}	—	V	
Spike Suppression	t_{SP}	—	—	50	ns	
Capacitance	C_{IN}	—	5	—	pF	

GRAPHICAL SYMBOL DESCRIPTION

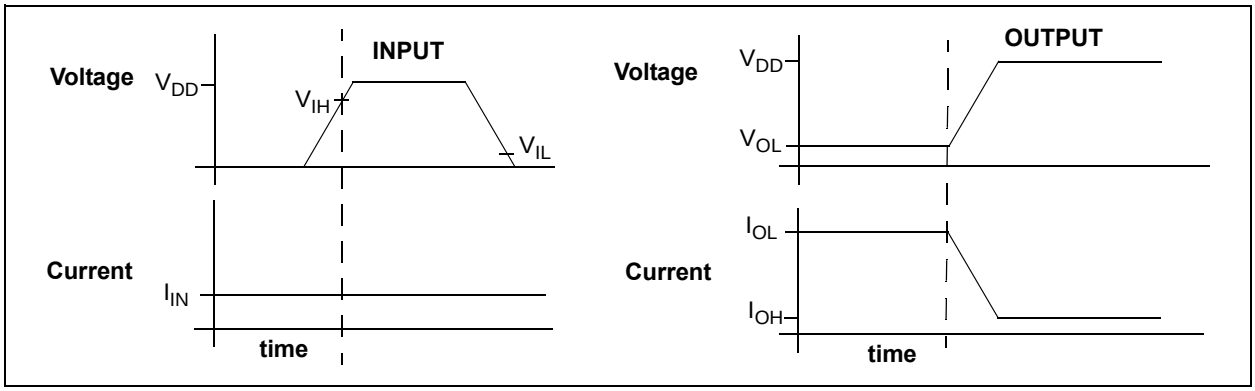

TEMPERATURE CHARACTERISTICS

Electrical Specifications: Unless otherwise indicated, V_{DD} = 2.7V to 5.5V and GND = Ground.

Parameters	Sym	Min	Typ	Max	Units	Conditions
Temperature Ranges						
Specified Temperature Range	T_A	-40	—	+125	°C	**(Note 1)**
Operating Temperature Range	T_A	-40	—	+125	°C	
Storage Temperature Range	T_A	-65	—	+150	°C	
Thermal Package Resistances						
Thermal Resistance, 8L-DFN	θ_{JA}	—	68	—	°C/W	
Thermal Resistance, 8L-MSOP	θ_{JA}	—	211	—	°C/W	

Note 1: Operation in this range must not cause T_J to exceed Maximum Junction Temperature (+150°C).

© 2011 Microchip Technology Inc.

SENSOR SERIAL INTERFACE TIMING SPECIFICATIONS

Electrical Specifications: Unless otherwise indicated, V_{DD} = 2.7V to 5.5V, T_A = -40°C to +125°C, GND = Ground and C_L = 80 pF. (**Note 1**)

Parameters	Sym	Min	Max	Units	Conditions
2-Wire SMBus/Standard Mode I²C™ Compatible Interface (Note 1)					
Serial Port Clock Frequency	f_{SC}	0	400	kHz	**(Note 2, 4)**
Low Clock	t_{LOW}	1300	—	ns	**(Note 2)**
High Clock	t_{HIGH}	600	—	ns	**(Note 2)**
Rise Time	t_R	20	300	ns	
Fall Time	t_F	20	300	ns	
Data in Setup Time	t_{SU-DI}	100	—	ns	**(Note 3)**
Data In Hold Time	t_{HD-DI}	0	—	ns	**(Note 5)**
Data Out Hold Time	t_{HD-DO}	200	900	ns	**(Note 4)**
Start Condition Setup Time	$t_{SU-START}$	600	—	ns	
Start Condition Hold Time	$t_{HD-START}$	600	—	ns	
Stop Condition Setup Time	$t_{SU-STOP}$	600	—	ns	
Bus Free	t_{B-FREE}	1300	—	ns	
Time-out	t_{OUT}	25	35	ms	
Bus Capacitive Load	C_b	—	400	pf	

Note 1: All values referred to $V_{IL\ MAX}$ and $V_{IH\ MIN}$ levels.

2: If $t_{LOW} > t_{OUT}$ or $t_{HIGH} > t_{OUT}$, the temperature sensor I²C interface will time-out. A Repeat Start command is required for communication.

3: This device can be used in a Standard mode I²C bus system, but the requirement, $t_{SU-DI} \geq 100$ ns, must be met. This device does not stretch the SCL Low time.

4: As a transmitter, the device provides internal minimum delay time, $t_{HD-DO\ MIN}$, to bridge the undefined region (min. 200 ns) of the falling edge of SCL, $t_{F\ MAX}$, to avoid unintended generation of Start or Stop conditions.

5: As a receiver, SDA should not be sampled at the falling edge of SCL. SDA can transition t_{HD-DI} 0 ns after SCL toggles Low.

TIMING DIAGRAM

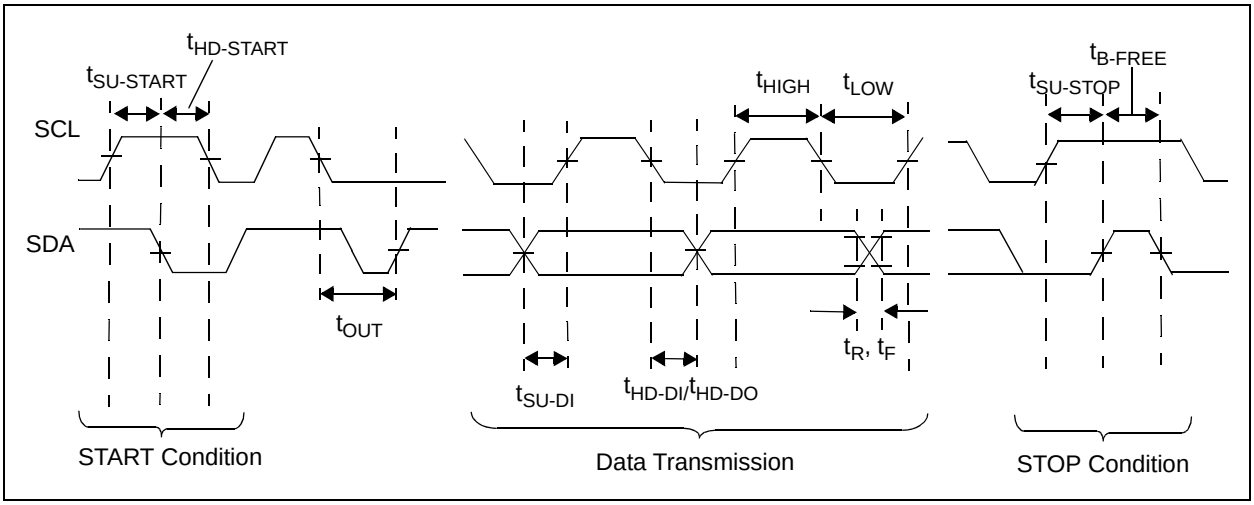

NOTES:

© 2011 Microchip Technology Inc.

2.0 TYPICAL PERFORMANCE CURVES

Note: The graphs and tables provided following this note are a statistical summary based on a limited number of samples and are provided for informational purposes only. The performance characteristics listed herein are not tested or guaranteed. In some graphs or tables, the data presented may be outside the specified operating range (e.g., outside specified power supply range) and therefore outside the warranted range.

Note: Unless otherwise indicated, V_{DD} = 2.7V to 5.5V, GND = Ground, SDA/SCL pulled-up to V_{DD} and T_A = -40°C to +125°C.

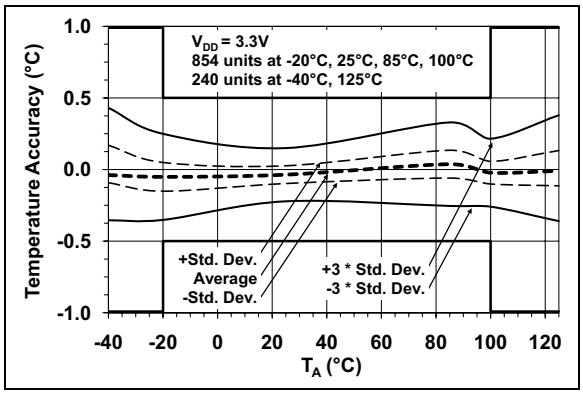

FIGURE 2-1: *Temperature Accuracy.*

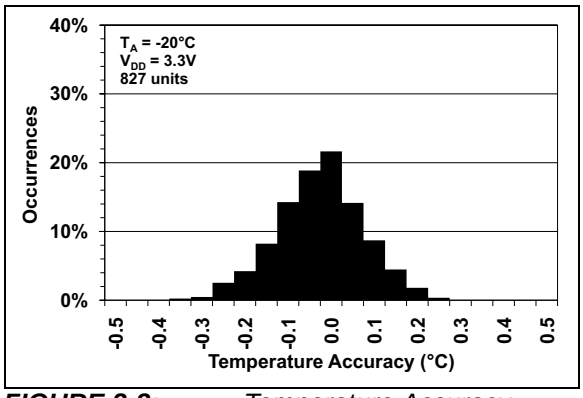

FIGURE 2-2: *Temperature Accuracy Histogram, T_A = -20°C.*

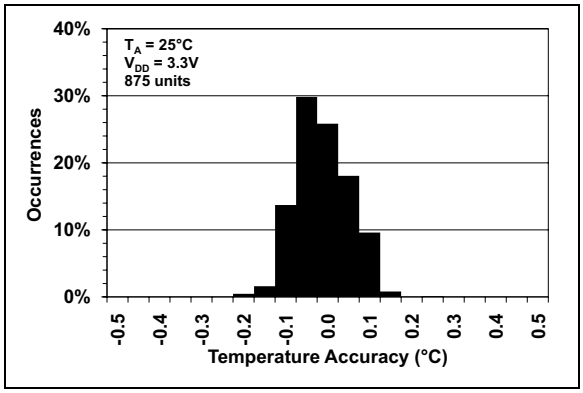

FIGURE 2-3: *Temperature Accuracy Histogram, T_A = +25°C.*

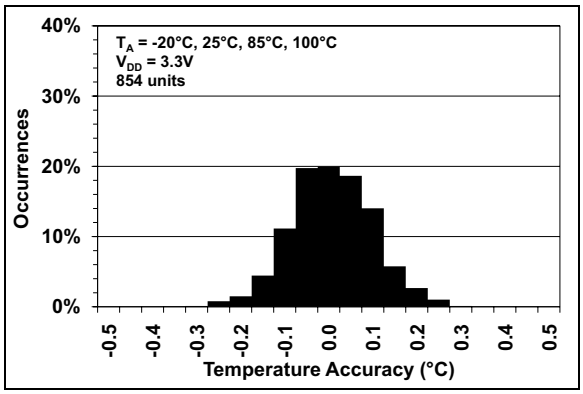

FIGURE 2-4: *Temperature Accuracy Histogram.*

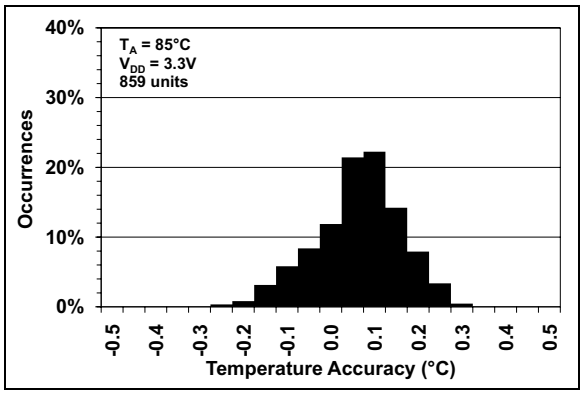

FIGURE 2-5: *Temperature Accuracy Histogram, T_A = +85°C.*

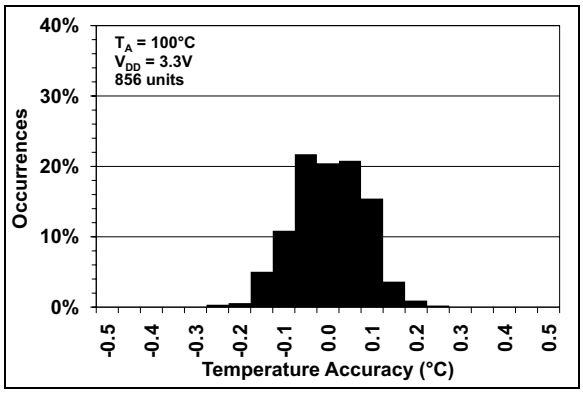

FIGURE 2-6: *Temperature Accuracy Histogram, T_A = +100°C.*

Note: Unless otherwise indicated, V_{DD} = 2.7V to 5.5V, GND = Ground, SDA/SCL pulled-up to V_{DD} and T_A = -40°C to +125°C.

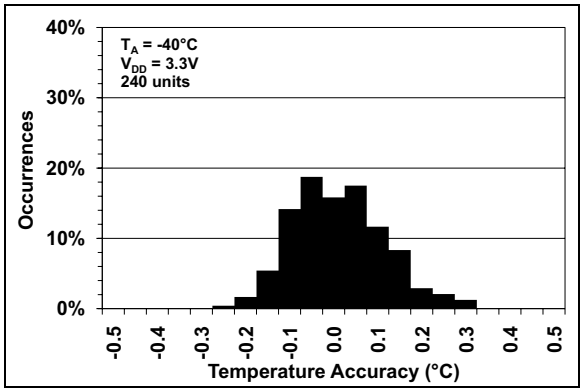

FIGURE 2-7: *Temperature Accuracy Histogram, T_A = -40°C.*

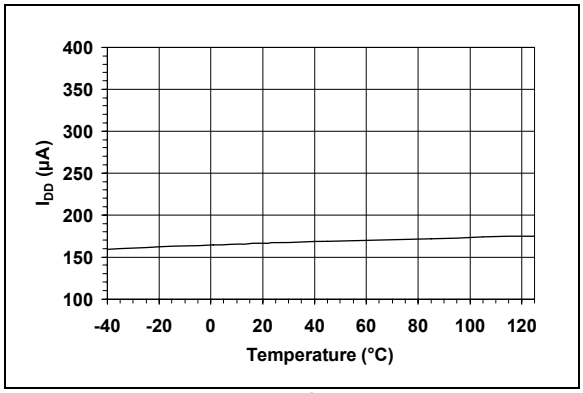

FIGURE 2-8: *Supply Current vs. Temperature.*

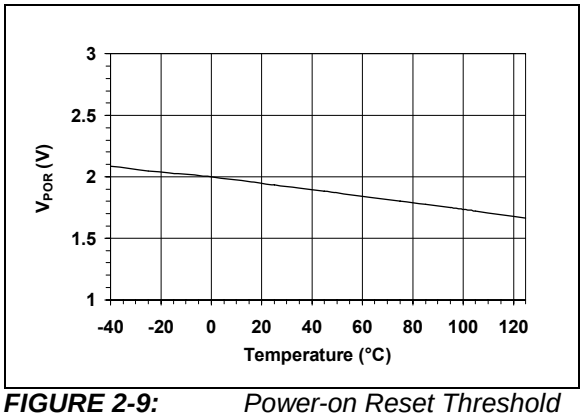

FIGURE 2-9: *Power-on Reset Threshold Voltage vs. Temperature.*

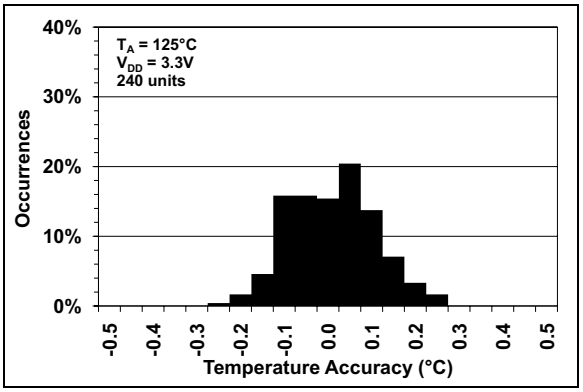

FIGURE 2-10: *Temperature Accuracy Histogram, T_A = +125°C.*

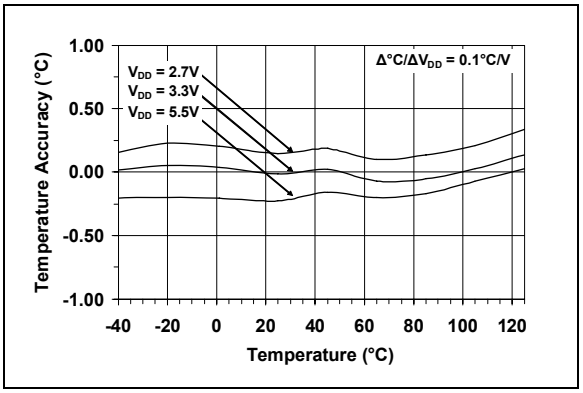

FIGURE 2-11: *Temperature Accuracy vs Supply Voltage.*

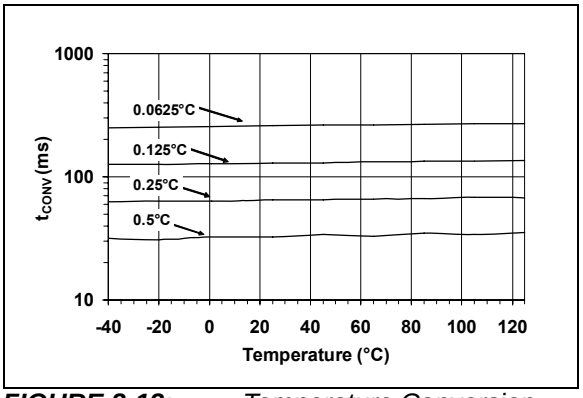

FIGURE 2-12: *Temperature Conversion Time vs. Temperature.*

© 2011 Microchip Technology Inc.

Note: Unless otherwise indicated, V_{DD} = 2.7V to 5.5V, GND = Ground, SDA/SCL pulled-up to V_{DD} and T_A = -40°C to +125°C.

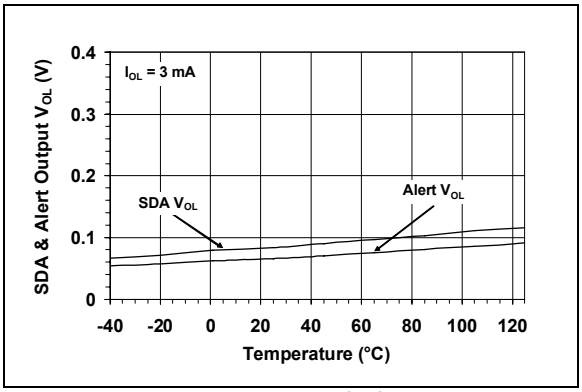

FIGURE 2-13: *SDA and Alert Output V_{OL} vs. Temperature.*

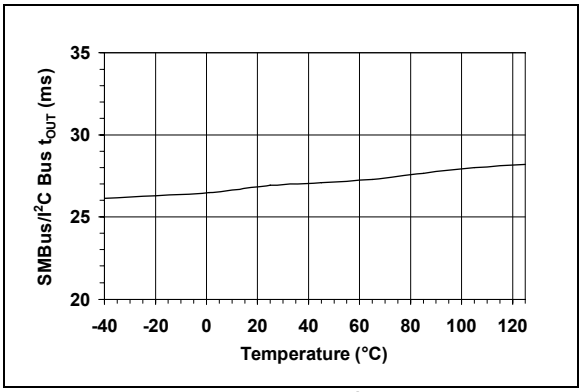

FIGURE 2-16: *SMBus Time-out vs. Temperature.*

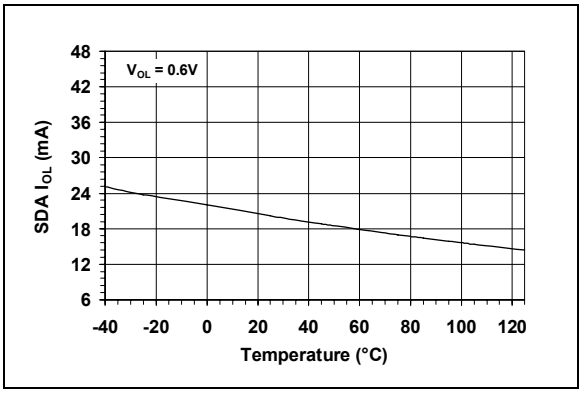

FIGURE 2-14: *SDA I_{OL} vs. Temperature.*

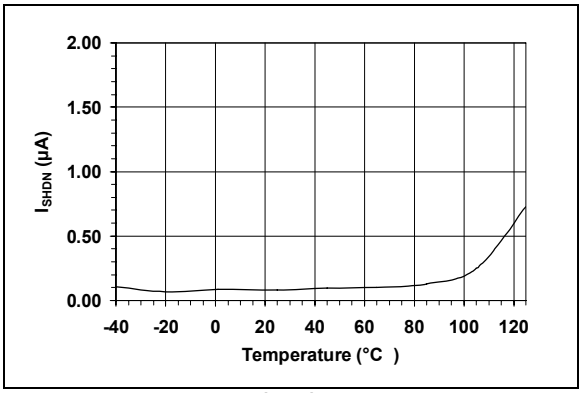

FIGURE 2-17: *Shutdown Current vs Temperature.*

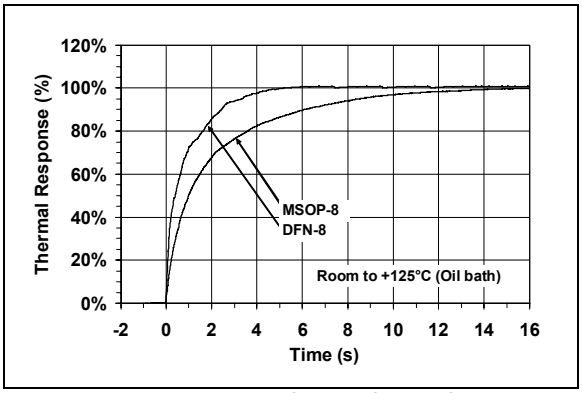

FIGURE 2-15: *Package Thermal Response.*

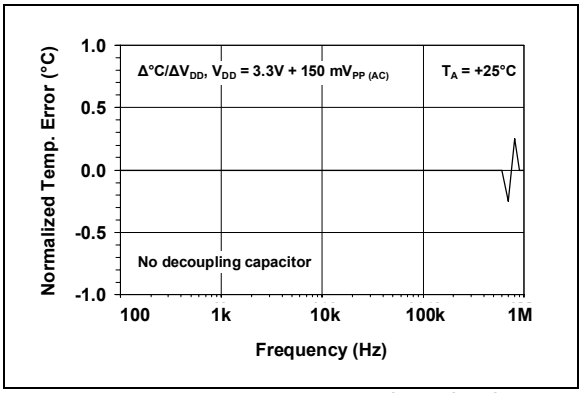

FIGURE 2-18: *Power Supply Rejection vs. Frequency.*

NOTES:

© 2011 Microchip Technology Inc.

3.0 PIN DESCRIPTION

The descriptions of the pins are listed in Table 3-1.

TABLE 3-1: PIN FUNCTION TABLE

DFN	MSOP	Symbol	Pin Function
1	1	SDA	Serial Data Line
2	2	SCL	Serial Clock Line
3	3	Alert	Temperature Alert Output
4	4	GND	Ground
5	5	A2	Slave Address
6	6	A1	Slave Address
7	7	A0	Slave Address
8	8	V_{DD}	Power Pin
9	—	EP	Exposed Thermal Pad (EP); must be connected to GND

3.1 Serial Data Line (SDA)

SDA is a bidirectional input/output pin, used to serially transmit data to/from the host controller. This pin requires a pull-up resistor. (See **Section 4.0 "Serial Communication"**.)

3.2 Serial Clock Line (SCL)

The SCL is a clock input pin. All communication and timing is relative to the signal on this pin. The clock is generated by the host or master controller on the bus. (See **Section 4.0 "Serial Communication"**.)

3.3 Temperature Alert, Open-Drain Output (Alert)

The MCP9808 temperature Alert output pin is an open-drain output. The device outputs a signal when the ambient temperature goes beyond the user-programmed temperature limit. (See **Section 5.2.3 "Alert Output Configuration"**).

3.4 Ground Pin (GND)

The GND pin is the system ground pin.

3.5 Address Pins (A0, A1, A2)

These pins are device address input pins.

The address pins correspond to the Least Significant bits (LSbs) of the address bits and the Most Significant bits (MSbs): A6, A5, A4, A3. This is illustrated in Table 3-2.

TABLE 3-2: MCP9808 ADDRESS BYTE

Device	Address Code				Slave Address		
	A6	A5	A4	A3	A2	A1	A0
MCP9808	0	0	1	1	x(1)	x	x
MCP9808(2)	1	0	0	1	x	x	x

Note 1: User-selectable address is shown by 'x'. A2, A1 and A0 must match the corresponding device pin configuration.

2: Contact factory for this address code.

3.6 Power Pin (V_{DD})

V_{DD} is the power pin. The operating voltage range, as specified in the DC electrical specification table, is applied on this pin.

3.7 Exposed Thermal Pad (EP)

There is an internal electrical connection between the Exposed Thermal Pad (EP) and the GND pin. The EP may be connected to the system ground on the Printed Circuit Board (PCB).

© 2011 Microchip Technology Inc.

NOTES:

© 2011 Microchip Technology Inc.

4.0 SERIAL COMMUNICATION

4.1 2-Wire Standard Mode I²C™ Protocol Compatible Interface

The MCP9808 Serial Clock (SCL) input and the bidirectional Serial Data (SDA) line form a 2-wire bidirectional, Standard mode, I²C compatible communication port (refer to the **Digital Input/Output Pin Characteristics** and **Sensor Serial Interface Timing Specifications** tables).

The following bus protocol has been defined:

TABLE 4-1: MCP9808 SERIAL BUS PROTOCOL DESCRIPTIONS

Term	Description
Master	The device that controls the serial bus, typically a microcontroller.
Slave	The device addressed by the master, such as the MCP9808.
Transmitter	Device sending data to the bus.
Receiver	Device receiving data from the bus.
START	A unique signal from the master to initiate serial interface with a slave.
STOP	A unique signal from the master to terminate serial interface from a slave.
Read/Write	A read or write to the MCP9808 registers.
ACK	A receiver Acknowledges (ACK) the reception of each byte by polling the bus.
NAK	A receiver Not-Acknowledges (NAK) or releases the bus to show End-of-Data (EOD).
Busy	Communication is not possible because the bus is in use.
Not Busy	The bus is in the Idle state; both SDA and SCL remain high.
Data Valid	SDA must remain stable before SCL becomes high in order for a data bit to be considered valid. During normal data transfers, SDA only changes state while SCL is low.

4.1.1 DATA TRANSFER

Data transfers are initiated by a Start condition (START), followed by a 7-bit device address and a read/write bit. An Acknowledge (ACK) from the slave confirms the reception of each byte. Each access must be terminated by a Stop condition (STOP).

Repeated communication is initiated after $t_{B\text{-}FREE}$.

This device does not support sequential register read/write. Each register needs to be addressed using the Register Pointer.

This device supports the receive protocol. The register can be specified using the pointer for the initial read. Each repeated read or receive begins with a Start condition and address byte. The MCP9808 retains the previously selected register. Therefore, it outputs data from the previously specified register (repeated pointer specification is not necessary).

4.1.2 MASTER/SLAVE

The bus is controlled by a master device (typically a microcontroller) that controls the bus access and generates the Start and Stop conditions. The MCP9808 is a slave device and does not control other devices in the bus. Both master and slave devices can operate as either transmitter or receiver. However, the master device determines which mode is activated.

4.1.3 START/STOP CONDITION

A high-to-low transition of the SDA line (while SCL is high) is the Start condition. All data transfers must be preceded by a Start condition from the master. A low-to-high transition of the SDA line (while SCL is high) signifies a Stop condition.

If a Start or Stop condition is introduced during data transmission, the MCP9808 releases the bus. All data transfers are ended by a Stop condition from the master.

4.1.4 ADDRESS BYTE

Following the Start condition, the host must transmit an 8-bit address byte to the MCP9808. The address for the MCP9808 temperature sensor is '0011,A2,A1,A0' in binary, where the A2, A1 and A0 bits are set externally by connecting the corresponding pins to V_{DD} '1' or GND '0'. The 7-bit address, transmitted in the serial bit stream, must match the selected address for the MCP9808 to respond with an ACK. Bit 8 in the address byte is a read/write bit. Setting this bit to '1' commands a read operation, while '0' commands a write operation (see Figure 4-1).

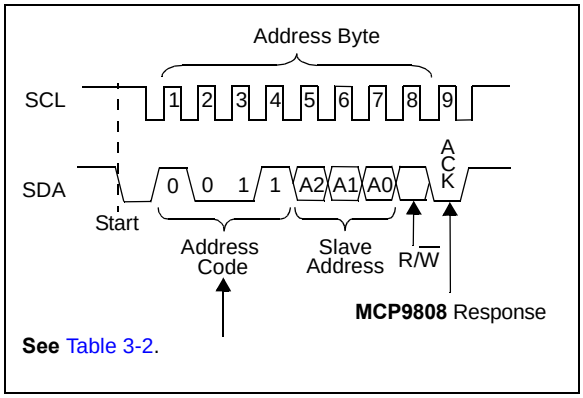

FIGURE 4-1: *Device Addressing.*

4.1.5 DATA VALID

After the Start condition, each bit of data in the transmission needs to be settled for a time specified by $t_{SU\text{-}DATA}$ before SCL toggles from low-to-high (see the Sensor Serial Interface Timing Specifications section).

4.1.6 ACKNOWLEDGE (ACK/NAK)

Each receiving device, when addressed, must generate an ACK bit after the reception of each byte. The master device must generate an extra clock pulse for ACK to be recognized.

The Acknowledging device pulls down the SDA line for $t_{SU\text{-}DATA}$ before the low-to-high transition of SCL from the master. SDA also needs to remain pulled down for $t_{H\text{-}DATA}$ after a high-to-low transition of SCL.

During read, the master must signal an End-of-Data (EOD) to the slave, by not generating an ACK bit (NAK), once the last bit has been clocked out of the slave. In this case, the slave will leave the data line released to enable the master to generate the Stop condition.

4.1.7 TIME-OUT

If the SCL stays low or high for the time specified by t_{OUT}, the MCP9808 temperature sensor resets the serial interface. This dictates the minimum clock speed as outlined in the specification.

© 2011 Microchip Technology Inc.

5.0 FUNCTIONAL DESCRIPTION

The MCP9808 temperature sensors consist of a band-gap-type temperature sensor, a Delta-Sigma Analog-to-Digital Converter (ΔΣ ADC), user-programmable registers and a 2-wire SMBus/I^{2}C protocol compatible serial interface. Figure 5-1 shows a block diagram of the register structure.

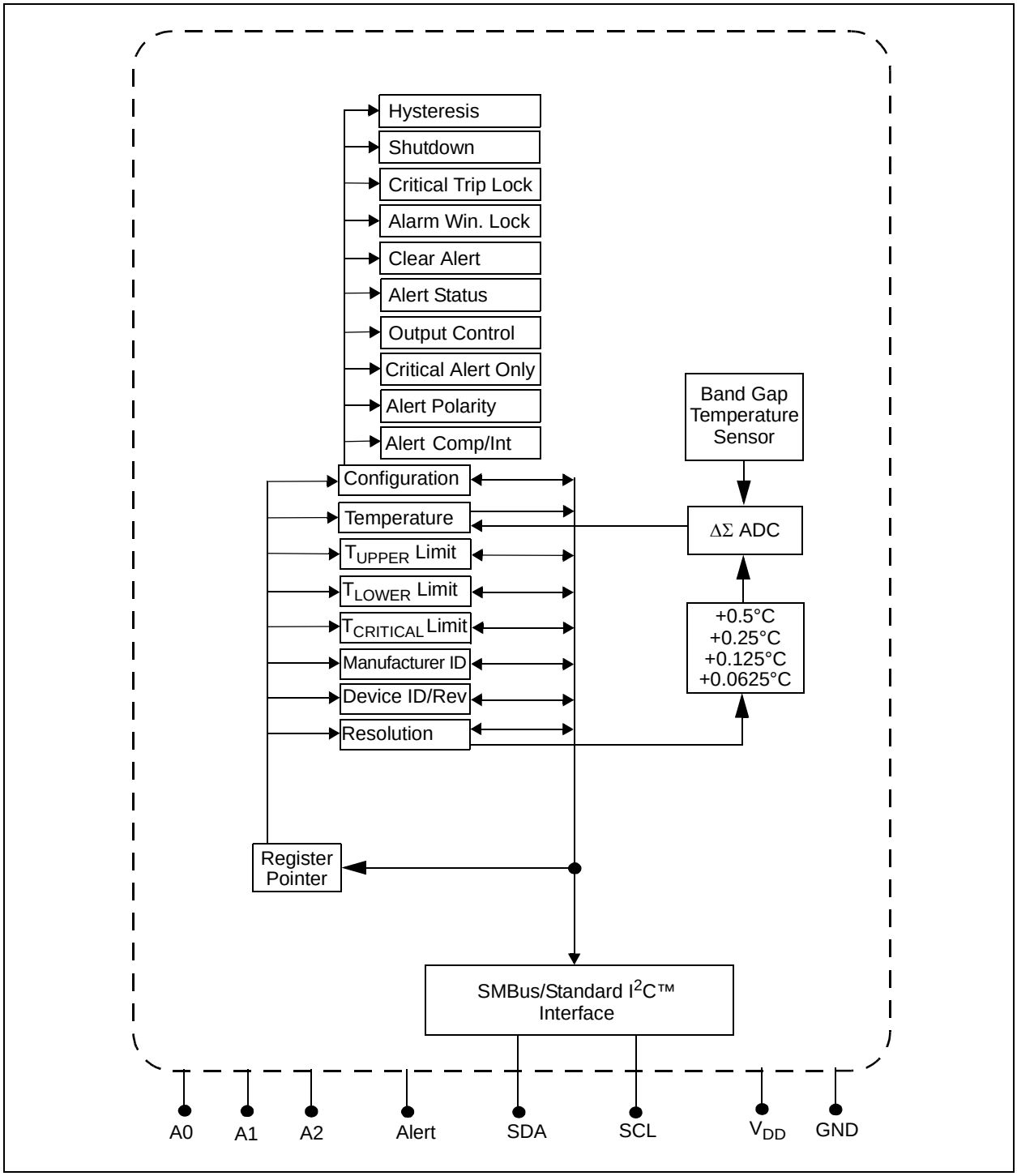

FIGURE 5-1: *Functional Block Diagram.*

5.1 Registers

The MCP9808 has several registers that are user-accessible. These registers include the Temperature register, Configuration register, Temperature Alert Upper Boundary and Lower Boundary Limit registers, Critical Temperature Limit register, Manufacturer Identification register and Device Identification register.

The Temperature register is read-only, used to access the ambient temperature data. This register is double-buffered and it is updated every t_{CONV}. The Temperature Alert Upper Boundary and Lower Boundary Limit registers are read/write registers. If the ambient temperature drifts beyond the user-specified limits, the MCP9808 outputs a signal using the Alert pin (refer to **Section 5.2.3 "Alert Output Configuration"**). In addition, the Critical Temperature Limit register is used to provide an additional critical temperature limit.

The Configuration register provides access to configure the MCP9808 device's various features. These registers are described in further detail in the following sections.

The registers are accessed by sending a Register Pointer to the MCP9808, using the serial interface. This is an 8-bit write-only pointer. However, the four Least Significant bits are used as pointers and all unused bits (Register Pointer<7:4>) need to be cleared or set to '0'. Register 5-1 describes the pointer or the address of each register.

REGISTER 5-1: REGISTER POINTER (WRITE-ONLY)

W-0	W-0	W-0	W-0	W-0	W-0	W-0	W-0
—	—	—	—	Pointer bits			
bit 7							bit 0

Legend:			
R = Readable bit	W = Writable bit	U = Unimplemented bit, read as '0'	
-n = Value at POR	'1' = Bit is set	'0' = Bit is cleared	x = Bit is unknown

bit 7-4 **W:** Writable bits

Write '0'.

Bits 7-4 must always be cleared or written to '0'. This device has additional registers that are reserved for test and calibration. If these registers are accessed, the device may not perform according to the specification.

bit 3-0 **Pointer bits**

0000 = RFU, Reserved for Future Use (Read-Only register)
0001 = Configuration register (CONFIG)
0010 = Alert Temperature Upper Boundary Trip register (T_{UPPER})
0011 = Alert Temperature Lower Boundary Trip register (T_{LOWER})
0100 = Critical Temperature Trip register (T_{CRIT})
0101 = Temperature register (T_A)
0110 = Manufacturer ID register
0111 = Device ID/Revision register
1000 = Resolution register
1xxx = Reserved[(1)]

Note 1: Some registers contain calibration codes and should not be accessed.

© 2011 Microchip Technology Inc.

TABLE 5-1: BIT ASSIGNMENT SUMMARY FOR ALL REGISTERS (See Section 5.3 "Summary of Power-on Default" for Power-on Defaults)

Register Pointer (Hex)	MSB/ LSB	Bit Assignment							
		7	6	5	4	3	2	1	0
0x00	MSB	0	0	0	0	0	0	0	0
	LSB	0	0	0	1	1	1	1	1
0x01	MSB	0	0	0	0	0	Hysteresis		SHDN
	LSB	Crt Loc	Win Loc	Int Clr	Alt Stat	Alt Cnt	Alt Sel	Alt Pol	Alt Mod
0x02	MSB	0	0	0	SIGN	2^{7}°C	2^{6}°C	2^{5}°C	2^{4}°C
	LSB	2^{3}°C	2^{2}°C	2^{1}°C	2^{0}°C	2^{-1}°C	2^{-2}°C	0	0
0x03	MSB	0	0	0	SIGN	2^{7}°C	2^{6}°C	2^{5}°C	2^{4}°C
	LSB	2^{3}°C	2^{2}°C	2^{1}°C	2^{0}°C	2^{-1}°C	2^{-2}°C	0	0
0x04	MSB	0	0	0	SIGN	2^{7}°C	2^{6}°C	2^{5}°C	2^{4}°C
	LSB	2^{3}°C	2^{2}°C	2^{1}°C	2^{0}°C	2^{-1}°C	2^{-2}°C	0	0
0x05	MSB	$T_A \geq T_{CRIT}$	$T_A > T_{UPPER}$	$T_A < T_{LOWER}$	SIGN	2^{7}°C	2^{6}°C	2^{5}°C	2^{4}°C
	LSB	2^{3}°C	2^{2}°C	2^{1}°C	2^{0}°C	2^{-1}°C	2^{-2}°C	2^{-3}°C	2^{-4}°C
0x06	MSB	0	0	0	0	0	0	0	0
	LSB	0	1	0	1	0	1	0	0
0x07	MSB	0	0	0	0	0	1	0	0
	LSB	0	0	0	0	0	0	0	0
0x08	LSB	0	0	0	0	0	0	1	1

5.1.1 SENSOR CONFIGURATION REGISTER (CONFIG)

The MCP9808 has a 16-bit Configuration register (CONFIG) that allows the user to set various functions for a robust temperature monitoring system. Bits 10 through 0 are used to select the temperature alert output hysteresis, device shutdown or Low-Power mode, temperature boundary and critical temperature lock, and temperature Alert output enable/disable. In addition, Alert output condition (output set for T_{UPPER} and T_{LOWER} temperature boundary or T_{CRIT} only), Alert output status and Alert output polarity and mode (Comparator Output or Interrupt Output mode) are user-configurable.

The temperature hysteresis bits 10 and 9 can be used to prevent output chatter when the ambient temperature gradually changes beyond the user-specified temperature boundary (see **Section 5.2.2 "Temperature Hysteresis (T_{HYST})"**. The Continuous Conversion or Shutdown mode is selected using bit 8. In Shutdown mode, the band gap temperature sensor circuit stops converting temperature and the Ambient Temperature register (T_A) holds the previous temperature data (see **Section 5.2.1 "Shutdown Mode"**). Bits 7 and 6 are used to lock the user-specified boundaries T_{UPPER}, T_{LOWER} and T_{CRIT} to prevent an accidental rewrite. The Lock bits are cleared by resetting the power. Bits 5 through 0 are used to configure the temperature Alert output pin. All functions are described in Register 5-2 (see **Section 5.2.3 "Alert Output Configuration"**).

REGISTER 5-2: CONFIG: CONFIGURATION REGISTER (→ ADDRESS '0000 0001'b)

U-0	U-0	U-0	U-0	U-0	R/W-0	R/W-0	R/W-0
—	—	—	—	—	T_{HYST}		SHDN
bit 15							bit 8

R/W-0	R/W-0	R/W-0	R-0	R/W-0	R/W-0	R/W-0	R/W-0
Crit. Lock	Win. Lock	Int. Clear	Alert Stat.	Alert Cnt.	Alert Sel.	Alert Pol.	Alert Mod.
bit 7							bit 0

Legend:			
R = Readable bit	W = Writable bit	U = Unimplemented bit, read as '0'	
-n = Value at POR	'1' = Bit is set	'0' = Bit is cleared	x = Bit is unknown

bit 15-11 **Unimplemented:** Read as '0'

bit 10-9 **T_{HYST}**: T_{UPPER} and T_{LOWER} Limit Hysteresis bits
00 = 0°C (power-up default)
01 = +1.5°C
10 = +3.0°C
11 = +6.0°C

(Refer to **Section 5.2.3 "Alert Output Configuration"**.)

This bit can not be altered when either of the Lock bits are set (bit 6 and bit 7).

This bit can be programmed in Shutdown mode.

bit 8 **SHDN:** Shutdown Mode bit
0 = Continuous conversion (power-up default)
1 = Shutdown (Low-Power mode)

In shutdown, all power-consuming activities are disabled, though all registers can be written to or read.

This bit cannot be set to '1' when either of the Lock bits is set (bit 6 and bit 7). However, it can be cleared to '0' for continuous conversion while locked (refer to **Section 5.2.1 "Shutdown Mode"**).

© 2011 Microchip Technology Inc.

REGISTER 5-2: CONFIG: CONFIGURATION REGISTER (→ ADDRESS '0000 0001'b)

bit 7 **Crit. Lock:** T_{CRIT} Lock bit

0 = Unlocked. T_{CRIT} register can be written (power-up default)
1 = Locked. T_{CRIT} register can not be written

When enabled, this bit remains set to '1' or locked until cleared by an internal Reset (**Section 5.3 "Summary of Power-on Default"**).

This bit can be programmed in Shutdown mode.

bit 6 **Win. Lock:** T_{UPPER} and T_{LOWER} Window Lock bit

0 = Unlocked; T_{UPPER} and T_{LOWER} registers can be written (power-up default)
1 = Locked; T_{UPPER} and T_{LOWER} registers can not be written

When enabled, this bit remains set to '1' or locked until cleared by a Power-on Reset (**Section 5.3 "Summary of Power-on Default"**).

This bit can be programmed in Shutdown mode.

bit 5 **Int. Clear:** Interrupt Clear bit

0 = No effect (power-up default)
1 = Clear interrupt output; when read, this bit returns to '0'

This bit can not be set to '1' in Shutdown mode, but it can be cleared after the device enters Shutdown mode.

bit 4 **Alert Stat.:** Alert Output Status bit

0 = Alert output is not asserted by the device (power-up default)
1 = Alert output is asserted as a comparator/Interrupt or critical temperature output

This bit can not be set to '1' or cleared to '0' in Shutdown mode. However, if the Alert output is configured as Interrupt mode, and if the host controller clears to '0', the interrupt, using bit 5 while the device is in Shutdown mode, then this bit will also be cleared '0'.

bit 3 **Alert Cnt.:** Alert Output Control bit

0 = Disabled (power-up default)
1 = Enabled

This bit can not be altered when either of the Lock bits are set (bit 6 and bit 7).

This bit can be programmed in Shutdown mode, but the Alert output will not assert or deassert.

bit 2 **Alert Sel.:** Alert Output Select bit

0 = Alert output for T_{UPPER}, T_{LOWER} and T_{CRIT} (power-up default)
1 = $T_A > T_{CRIT}$ only (T_{UPPER} and T_{LOWER} temperature boundaries are disabled)

When the Alarm Window Lock bit is set, this bit cannot be altered until unlocked (bit 6).

This bit can be programmed in Shutdown mode, but the Alert output will not assert or deassert.

bit 1 **Alert Pol.:** Alert Output Polarity bit

0 = Active-low (power-up default; pull-up resistor required)
1 = Active-high

This bit cannot be altered when either of the Lock bits are set (bit 6 and bit 7).

This bit can be programmed in Shutdown mode, but the Alert output will not assert or deassert.

bit 0 **Alert Mod.:** Alert Output Mode bit

0 = Comparator output (power-up default)
1 = Interrupt output

This bit cannot be altered when either of the Lock bits are set (bit 6 and bit 7).

This bit can be programmed in Shutdown mode, but the Alert output will not assert or deassert.

Writing to the CONFIG Register to Enable the Event Output Pin <0000 0000 0000 1000>b:

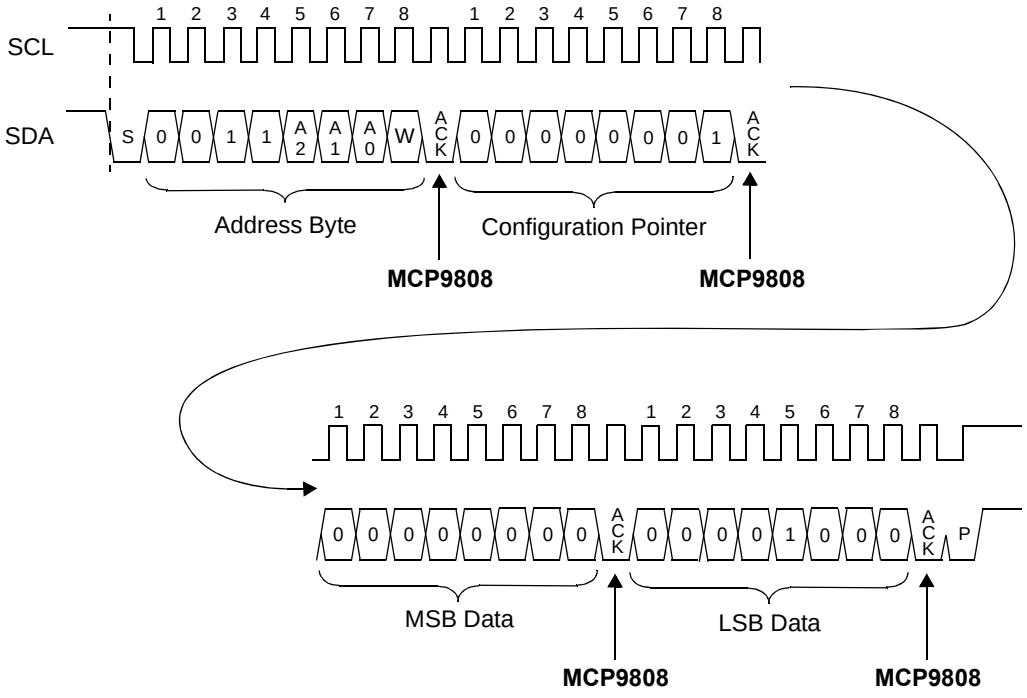

Note: This is an example routine (see **Appendix A: "Source Code"**).

```
i2c_start();                        // send START command
i2c_write(AddressByte & 0xFE);      //WRITE Command (see Section 4.1.4 "Address Byte")
                                    //also, make sure bit 0 is cleared '0'
i2c_write(0x01);                    // Write CONFIG Register
i2c_write(0x00);                    // Write data
i2c_write(0x08);                    // Write data
i2c_stop();                         // send STOP command
```

FIGURE 5-2: *Timing Diagram for Writing to the Configuration Register (see **Section 4.0 "Serial Communication"**).*

© 2011 Microchip Technology Inc.

Reading the CONFIG Register:

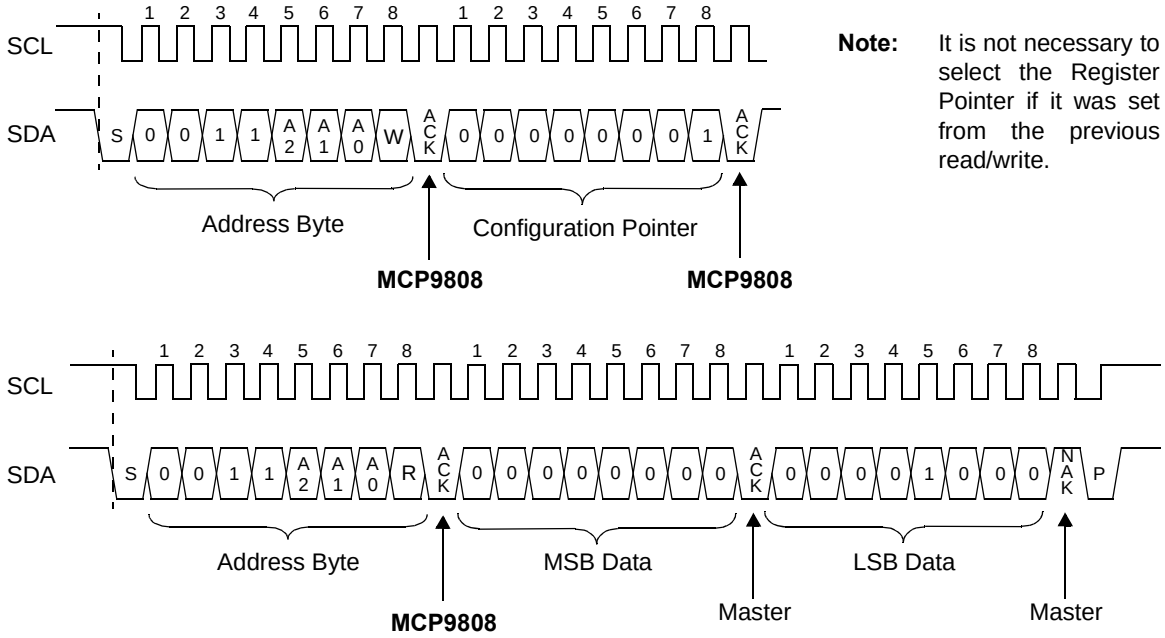

Note: It is not necessary to select the Register Pointer if it was set from the previous read/write.

Note: This is an example routine (see **Appendix A: "Source Code"**).

```
i2c_start();                        // send START command
i2c_write(AddressByte & 0xFE);      //WRITE Command (see Section 4.1.4 "Address Byte")
                                    //also, make sure bit 0 is cleared '0'
i2c_write(0x01);                    // Write CONFIG Register
i2c_start();                        // send Repeat START command
i2c_write(AddressByte | 0x01);      //READ Command
                                    //also, make sure bit 0 is set '1'
UpperByte = i2c_read(ACK);          // READ 8 bits
                                    //and Send ACK bit
LowerByte = i2c_read(NAK);          // READ 8 bits
                                    //and Send NAK bit
i2c_stop();                         // send STOP command
```

FIGURE 5-3: *Timing Diagram for Reading from the Configuration Register (see **Section 4.0 "Serial Communication"**).*

5.1.2 UPPER/LOWER/CRITICAL TEMPERATURE LIMIT REGISTERS ($T_{UPPER}/T_{LOWER}/T_{CRIT}$)

The MCP9808 has a 16-bit read/write Alert Output Temperature Upper Boundary register (T_{UPPER}), a 16-bit Lower Boundary register (T_{LOWER}) and a 16-bit Critical Boundary register (T_{CRIT}) that contain 11-bit data in two's complement format (0.25°C). This data represents the maximum and minimum temperature boundary or temperature window that can be used to monitor ambient temperature. If this feature is enabled (**Section 5.1.1 "Sensor Configuration Register (CONFIG)"**) and the ambient temperature exceeds the specified boundary or window, the MCP9808 asserts an Alert output. (Refer to **Section 5.2.3 "Alert Output Configuration"**).

REGISTER 5-3: $T_{UPPER}/T_{LOWER}/T_{CRIT}$ UPPER/LOWER/CRITICAL TEMPERATURE LIMIT REGISTER (→ ADDRESS '0000 0010'b/'0000 0011'b/'0000 0100'b)(1)

U-0	U-0	U-0	R/W-0	R/W-0	R/W-0	R/W-0	R/W-0
—	—	—	Sign	2^7°C	2^6°C	2^5°C	2^4°C
bit 15							bit 8

R/W-0	R/W-0	R/W-0	R/W-0	R/W-0	R/W-0	U-0	U-0
2^3°C	2^2°C	2^1°C	2^0°C	2^{-1}°C	2^{-2}°C	—	—
bit 7							bit 0

Legend:			
R = Readable bit	W = Writable bit	U = Unimplemented bit, read as '0'	
-n = Value at POR	'1' = Bit is set	'0' = Bit is cleared	x = Bit is unknown

bit 15-13 **Unimplemented:** Read as '0'

bit 12 **Sign:** Sign bit
0 = $T_A \geq 0$°C
1 = $T_A < 0$°C

bit 11-2 **$T_{UPPER}/T_{LOWER}/T_{CRIT}$:** Temperature Boundary bits
Temperature boundary trip data in two's complement format.

bit 1-0 **Unimplemented:** Read as '0'

Note 1: This table shows two 16-bit registers for T_{UPPER}, T_{LOWER} and T_{CRIT}, located at '0000 0010b', '0000 0011b' and '0000 0100b', respectively.

© 2011 Microchip Technology Inc.

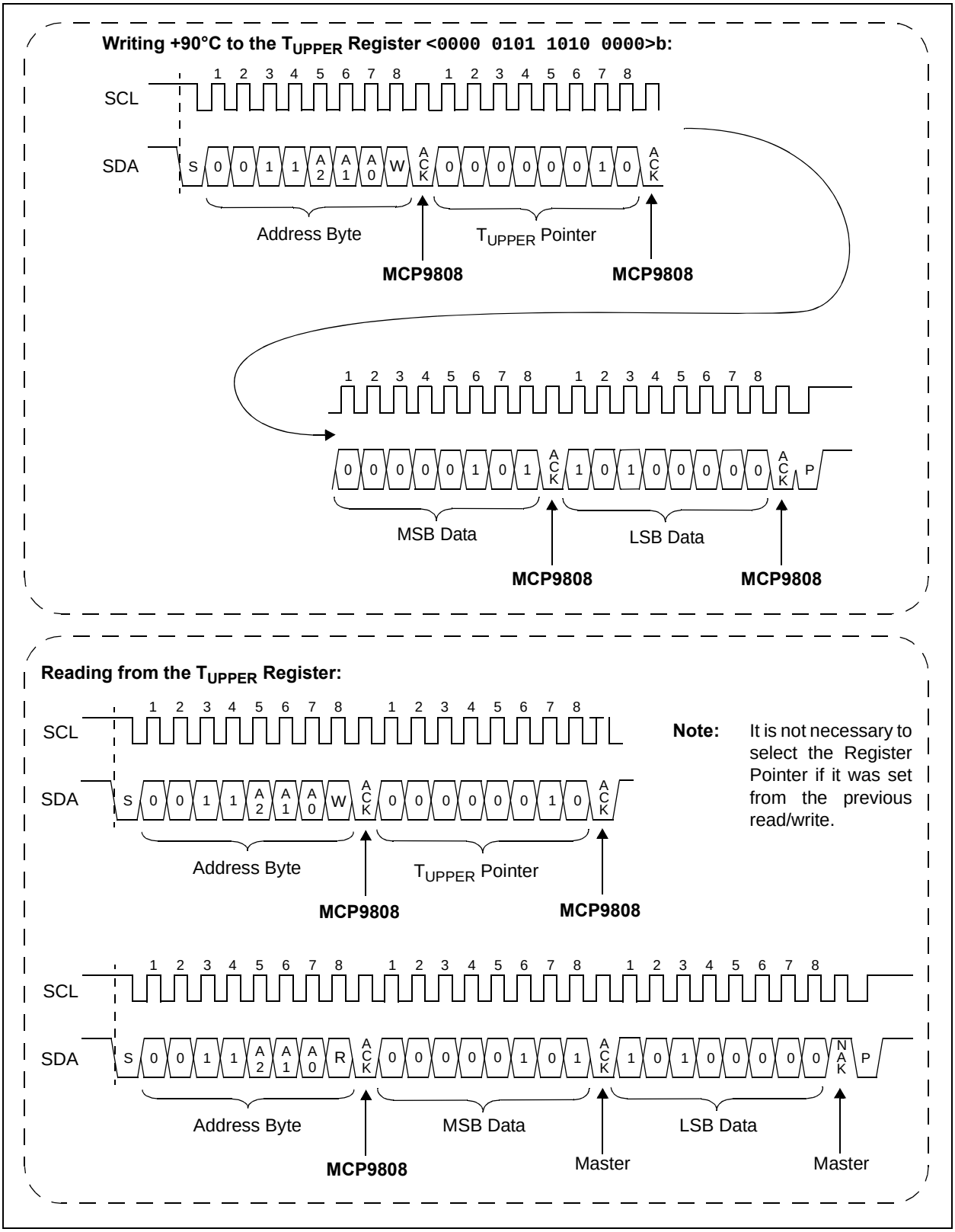

FIGURE 5-4: *Timing Diagram for Writing and Reading from the T_{UPPER} Register (see* ***Section 4.0 "Serial Communication"****).*

5.1.3 AMBIENT TEMPERATURE REGISTER (T_A)

The MCP9808 uses a band gap temperature sensor circuit to output analog voltage proportional to absolute temperature. An internal ΔΣ ADC is used to convert the analog voltage to a digital word. The digital word is loaded to a 16-bit read-only Ambient Temperature register (T_A) that contains 13-bit temperature data in two's complement format.

The T_A register bits (T_A<12:0>) are double-buffered. Therefore, the user can access the register, while in the background, the MCP9808 performs an Analog-to-Digital conversion. The temperature data from the ΔΣ ADC is loaded in parallel to the T_A register at t_{CONV} refresh rate.

In addition, the T_A register uses three bits (T_A<15:13>) to reflect the Alert pin state. This allows the user to identify the cause of the Alert output trigger (see **Section 5.2.3 "Alert Output Configuration"**); bit 15 is set to '1' if T_A is greater than or equal to T_{CRIT}, bit 14 is set to '1' if T_A is greater than T_{UPPER} and bit 13 is set to '1' if T_A is less than T_{LOWER}.

The T_A register bit assignment and boundary conditions are described in Register 5-4.

REGISTER 5-4: T_A: AMBIENT TEMPERATURE REGISTER (→ ADDRESS '0000 0101'b)(1)

R-0	R-0	R-0	R-0	R-0	R-0	R-0	R-0
T_A vs. T_{CRIT}(1)	T_A vs. T_{UPPER}(1)	T_A vs. T_{LOWER}(1)	SIGN	2^7 °C	2^6 °C	2^5 °C	2^4 °C
bit 15							bit 8

R-0	R-0	R-0	R-0	R-0	R-0	R-0	R-0
2^3 °C	2^2 °C	2^1 °C	2^0 °C	2^{-1} °C	2^{-2} °C(2)	2^{-3} °C(2)	2^{-4} °C(2)
bit 7							bit 0

Legend:			
R = Readable bit	W = Writable bit	U = Unimplemented bit, read as '0'	
-n = Value at POR	'1' = Bit is set	'0' = Bit is cleared	x = Bit is unknown

bit 15 **T_A vs. T_{CRIT} bit(1)**
0 = $T_A < T_{CRIT}$
1 = $T_A \geq T_{CRIT}$

bit 14 **T_A vs. T_{UPPER} bit(1)**
0 = $T_A \leq T_{UPPER}$
1 = $T_A > T_{UPPER}$

bit 13 **T_A vs. T_{LOWER} bit(1)**
0 = $T_A \geq T_{LOWER}$
1 = $T_A < T_{LOWER}$

bit 12 **SIGN bit**
0 = $T_A \geq 0°C$
1 = $T_A < 0°C$

bit 11-0 **T_A:** Ambient Temperature bits(2)
12-bit ambient temperature data in two's complement format.

Note 1: Bits 15, 14 and 13 are not affected by the status of the Alert Output Configuration (CONFIG<5:0> bits, Register 5-2).

2: Bits 2, 1 and 0 may remain clear at '0' depending on the status of the Resolution register (Register 5-7). The power-up default is 0.25°C/bit; bits 1 and 0 remain clear '0'.

© 2011 Microchip Technology Inc.

5.1.3.1 T_A Bits to Temperature Conversion

To convert the T_A bits to decimal temperature, the upper three boundary bits (T_A<15:13>) must be masked out. Then, determine the SIGN bit (bit 12) to check positive or negative temperature, shift the bits accordingly, and combine the upper and lower bytes of the 16-bit register. The upper byte contains data for temperatures greater than +32°C while the lower byte contains data for temperature less than +32°C, including fractional data. When combining the upper and lower bytes, the upper byte must be right-shifted by 4 bits (or multiply by 2^4) and the lower byte must be left-shifted by 4 bits (or multiply by 2^{-4}). Adding the results of the shifted values provides the temperature data in decimal format (see Equation 5-1).

The temperature bits are in two's compliment format, therefore, positive temperature data and negative temperature data are computed differently. Equation 5-1 shows the temperature computation. The example instruction code, outlined in Example 5-1, shows the communication flow; also see Figure 5-5 for the timing diagram.

EQUATION 5-1: BYTES TO TEMPERATURE CONVERSION

Temperature $T_A \geq 0°C$

$$T_A = (UpperByte \times 2^4 + LowerByte \times 2^{-4})$$

Temperature < 0°C

$$T_A = 256 - (UpperByte \times 2^4 + LowerByte \times 2^{-4})$$

Where:

T_A = Ambient Temperature (°C)

UpperByte = T_A bit 15 to bit 8

LowerByte = T_A bit 7 to bit 0

EXAMPLE 5-1: SAMPLE INSTRUCTION CODE

This example routine assumes the variables and I²C™ communication subroutines are predefined (see Appendix A: "Source Code"):

```
i2c_start();                        // send START command
i2c_write (AddressByte & 0xFE);     //WRITE Command (see Section 4.1.4 "Address Byte")
                                    //also, make sure bit 0 is cleared '0'
i2c_write(0x05);                    // Write TA Register Address
i2c_start();                        //Repeat START
i2c_write(AddressByte | 0x01);      // READ Command (see Section 4.1.4 "Address Byte")
                                    //also, make sure bit 0 is Set '1'
UpperByte = i2c_read(ACK);          // READ 8 bits
                                    //and Send ACK bit
LowerByte = i2c_read(NAK);          // READ 8 bits
                                    //and Send NAK bit
i2c_stop();                         // send STOP command
//Convert the temperature data
//First Check flag bits
if ((UpperByte & 0x80) == 0x80){    //TA ³ TCRIT
}
if ((UpperByte & 0x40) == 0x40){    //TA > TUPPER
}
if ((UpperByte & 0x20) == 0x20){    //TA < TLOWER
}
UpperByte = UpperByte & 0x1F;       //Clear flag bits
if ((UpperByte & 0x10) == 0x10){    //TA < 0°C
    UpperByte = UpperByte & 0x0F;   //Clear SIGN
    Temperature = 256 - (UpperByte x 16 + LowerByte / 16);
}else                               //TA  ³ 0°C
    Temperature = (UpperByte x 16 + LowerByte / 16);
                                    //Temperature = Ambient Temperature (°C)
```

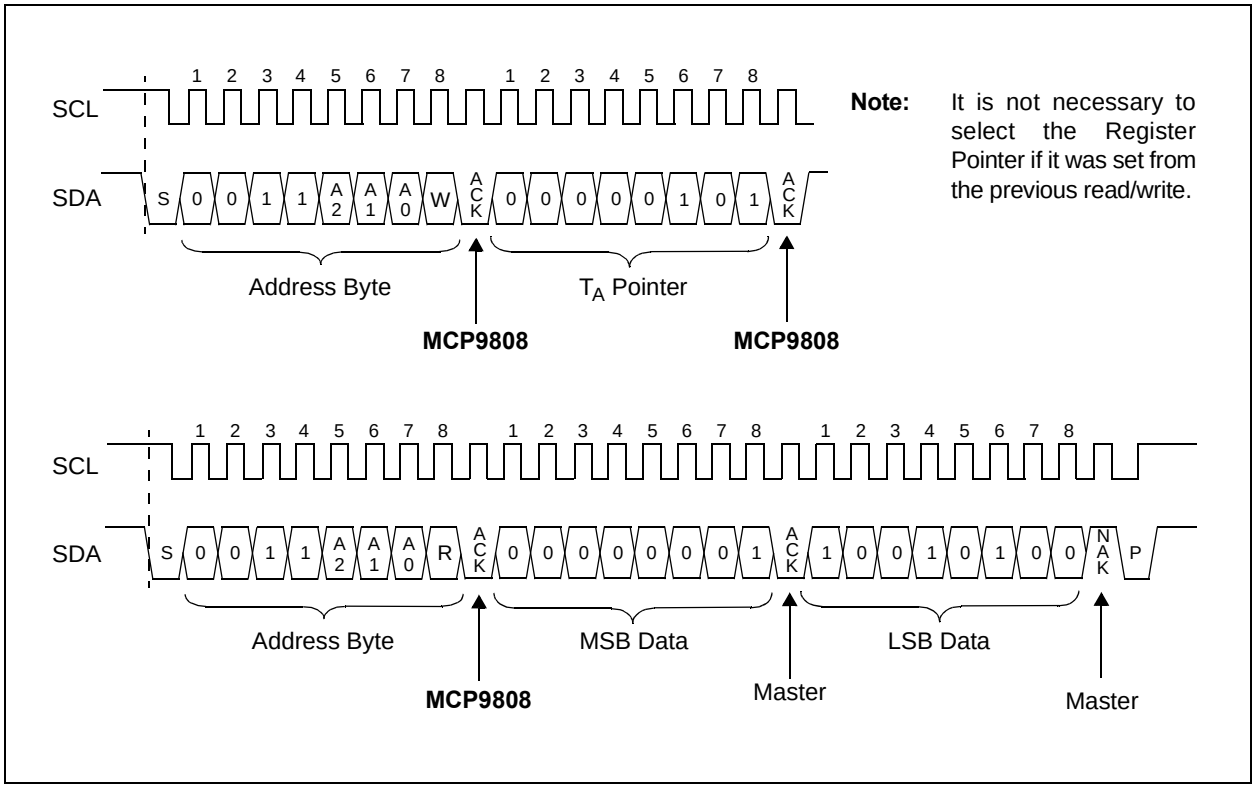

FIGURE 5-5: *Timing Diagram for Reading +25.25°C Temperature from the T_A Register (see* ***Section 4.0 "Serial Communication"****).*

© 2011 Microchip Technology Inc.

5.1.4 MANUFACTURER ID REGISTER

This register is used to identify the manufacturer of the device in order to perform manufacturer-specific operation. The Manufacturer ID for the MCP9808 is 0x0054 (hexadecimal).

REGISTER 5-5: MANUFACTURER ID REGISTER – READ-ONLY (→ ADDRESS `'0000 0110'b`)

R-0	R-0	R-0	R-0	R-0	R-0	R-0	R-0
Manufacturer ID							
bit 15							bit 8

R-0	R-1	R-0	R-1	R-0	R-1	R-0	R-0
Manufacturer ID							
bit 7							bit 0

Legend:			
R = Readable bit	W = Writable bit	U = Unimplemented bit, read as '0'	
-n = Value at POR	'1' = Bit is set	'0' = Bit is cleared	x = Bit is unknown

bit 15-0 **Device Manufacturer Identification bits**

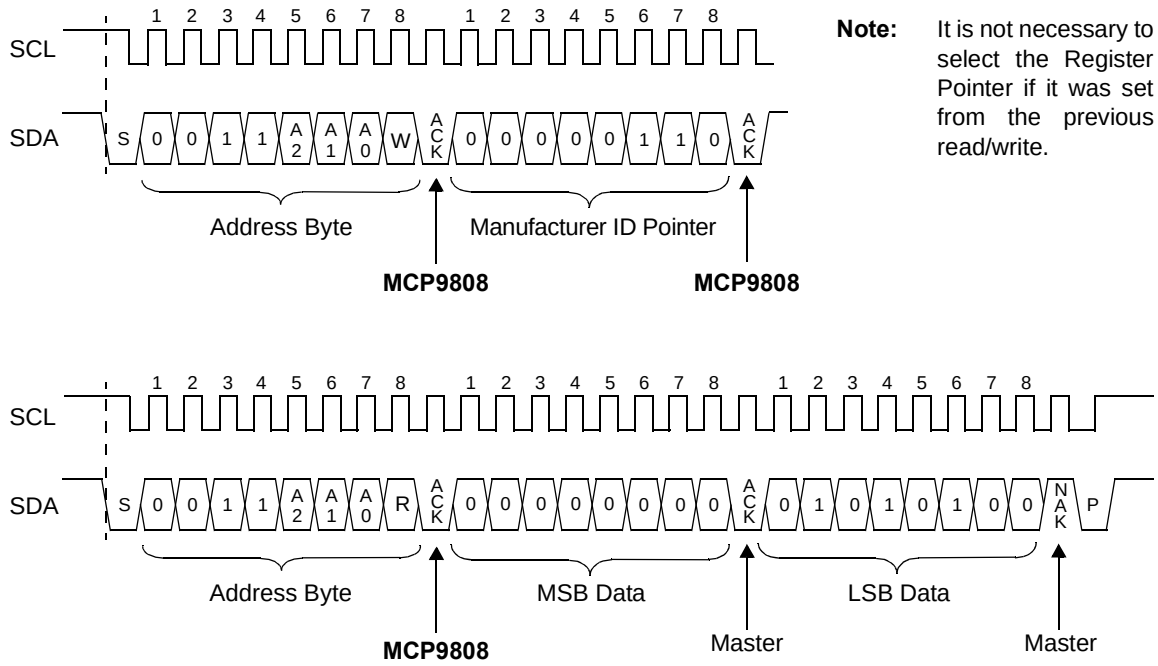

Note: It is not necessary to select the Register Pointer if it was set from the previous read/write.

FIGURE 5-6: *Timing Diagram for Reading the Manufacturer ID Register (see* ***Section 4.0 "Serial Communication"****).*

5.1.5 DEVICE ID AND REVISION REGISTER

The upper byte of this register is used to specify the device identification and the lower byte is used to specify the device revision. The Device ID for the MCP9808 is 0x04 (hex).

The revision begins with 0x00 (hex) for the first release, with the number being incremented as revised versions are released.

REGISTER 5-6: DEVICE ID AND DEVICE REVISION – READ-ONLY (→ ADDRESS ‘0000 0111’b)

R-0	R-0	R-0	R-0	R-0	R-1	R-0	R-0
Device ID							
bit 15							bit 8

R-0	R-0	R-0	R-0	R-0	R-0	R-0	R-0
Device Revision							
bit 7							bit 0

Legend:			
R = Readable bit	W = Writable bit	U = Unimplemented bit, read as ‘0’	
-n = Value at POR	‘1’ = Bit is set	‘0’ = Bit is cleared	x = Bit is unknown

bit 15-8 **Device ID:** Bit 15 to bit 8 are used for device ID

bit 7-0 **Device Revision:** Bit 7 to bit 0 are used for device revision

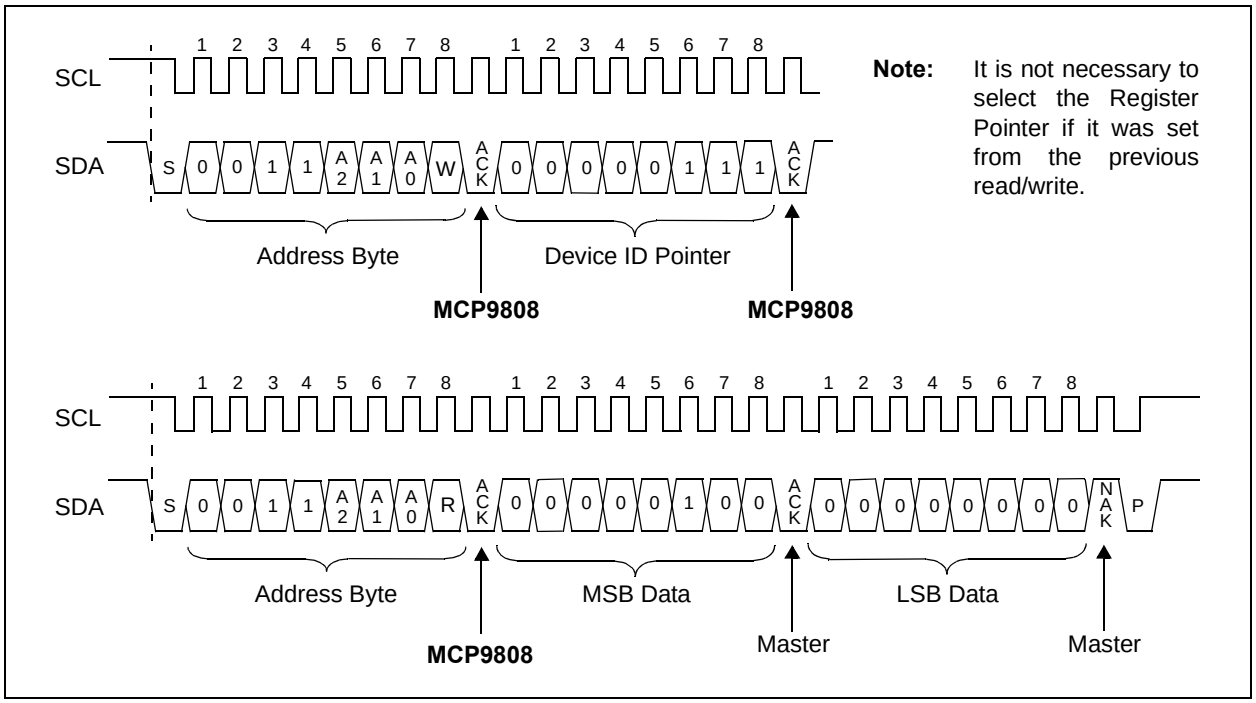

FIGURE 5-7: *Timing Diagram for Reading Device ID and Device Revision Register (see* ***Section 4.0 “Serial Communication”****).*

© 2011 Microchip Technology Inc.

5.1.6 RESOLUTION REGISTER

This register allows the user to change the sensor resolution (see **Section 5.2.4 "Temperature Resolution"**). The POR default resolution is +0.0625°C. The selected resolution is also reflected in the Capability register (see Register 5-2).

REGISTER 5-7: RESOLUTION REGISTER (→ ADDRESS '0000 1000'b)

U-0	U-0	U-0	U-0	U-0	U-0	R/W-1	R/W-1
—	—	—	—	—	—	Resolution	
bit 7							bit 0

Legend:			
R = Readable bit	W = Writable bit	U = Unimplemented bit, read as '0'	
-n = Value at POR	'1' = Bit is set	'0' = Bit is cleared	x = Bit is unknown

bit 7-2 **Unimplemented:** Read as '0'

bit 1-0 **Resolution bits**

00 = +0.5°C (t_{CONV} = 30 ms typical)
01 = +0.25°C (t_{CONV} = 65 ms typical)
10 = +0.125°C (t_{CONV} = 130 ms typical)
11 = +0.0625°C (power-up default, t_{CONV} = 250 ms typical)

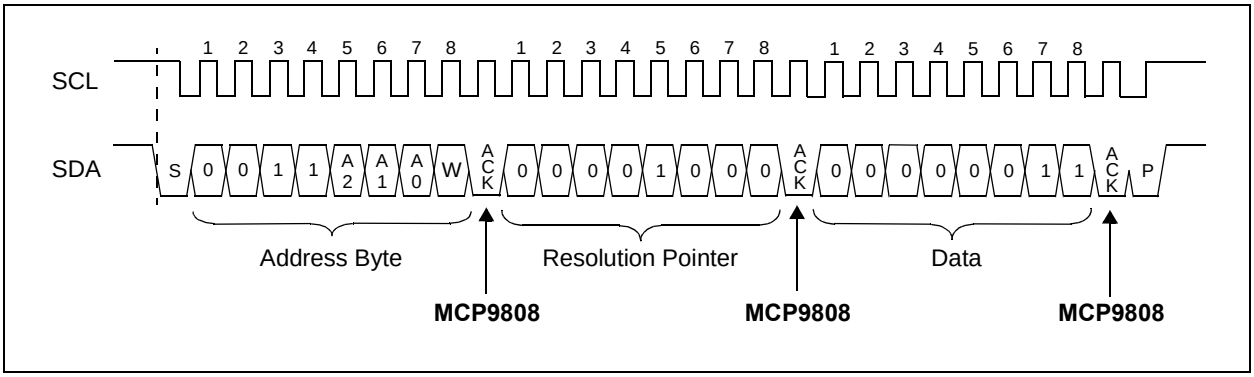

FIGURE 5-8: *Timing Diagram for Changing T_A Resolution to +0.0625°C <0000 0011>b (see **Section 4.0 "Serial Communication"**).*

5.2 SENSOR FEATURE DESCRIPTION

5.2.1 SHUTDOWN MODE

Shutdown mode disables all power consuming activities (including temperature sampling operations) while leaving the serial interface active. This mode is selected by setting bit 8 of CONFIG to '1'. In this mode, the device consumes I_{SHDN}. It remains in this mode until bit 8 is cleared to '0' to enable Continuous Conversion mode or until power is recycled.

The Shutdown bit (bit 8) cannot be set to '1' while the CONFIG<7:6> bits (Lock bits) are set to '1'. However, it can be cleared to '0' or returned to Continuous Conversion mode while locked.

In Shutdown mode, all registers can be read or written. However, the serial bus activity increases the shutdown current. In addition, if the device is in shutdown while the Alert pin is asserted, the device will retain the active state during shutdown. This increases the shutdown current due to the additional Alert output current.

5.2.2 TEMPERATURE HYSTERESIS (T_{HYST})

A hysteresis of 0°C, +1.5°C, +3°C or +6°C can be selected for the T_{UPPER}, T_{LOWER} and T_{CRIT} temperate boundaries, using bits 10 and 9 of CONFIG. The hysteresis applies for decreasing temperature only (hot to cold) or as temperature drifts below the specified limit.

The Hysteresis bits can not be changed if either of the Lock bits (CONFIG<7:6) are set to '1'.

The T_{UPPER}, T_{LOWER} and T_{CRIT} boundary conditions are described graphically in Figure 5-10.

5.2.3 ALERT OUTPUT CONFIGURATION

The Alert output can be enabled by using bit 3 of the CONFIG register (Alert Output Control bit) and can be configured as either a comparator output or as an Interrupt Output mode using bit 0 of CONFIG (Alert Output Mode bit). The polarity can also be specified as active-high or active-low using bit 1 of CONFIG (Alert Polarity bit). This is an open-drain output and requires a pull-up resistor.

When the ambient temperature increases above the critical temperature limit, the Alert output is forced to a comparator output (regardless of CONFIG<0>). When the temperature drifts below the critical temperature limit minus hysteresis, the Alert output automatically returns to the state specified by CONFIG<0> bit.

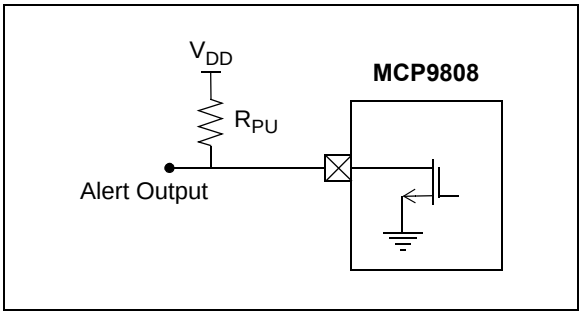

FIGURE 5-9: *Active-Low Alert Output Configuration.*

The status of the Alert output can be read using CONFIG<4> (Alert Output Status bit). This bit can not be set to '1' in Shutdown mode.

Bits 7 and 6 of the CONFIG register can be used to lock the T_{UPPER}, T_{LOWER} and T_{CRIT} registers. These bits prevent false triggers at the Alert output due to an accidental rewrite to these registers.

The Alert output can also be used as a critical temperature output using bit 2 of CONFIG (Alert Output Select bit). When this feature is selected, the Alert output becomes a comparator output. In this mode, the interrupt output configuration (Alert Output Mode bit, CONFIG<0>) is ignored.

5.2.3.1 Comparator Mode

Comparator mode is selected using bit 0 of CONFIG. In this mode, the Alert output is asserted as active-high or active-low, using bit 1 of CONFIG. Figure 5-10 shows the conditions that toggle the Alert output.

If the device enters Shutdown mode with asserted Alert output, the output remains asserted during Shutdown mode. The device must be operating in Continuous Conversion mode for t_{CONV}. The T_A vs. T_{UPPER}, T_{LOWER} and T_{CRIT} boundary conditions need to be satisfied in order for the Alert output to deassert.

Comparator mode is useful for thermostat type applications, such as turning on a cooling fan or triggering a system shutdown when the temperature exceeds a safe operating range.

© 2011 Microchip Technology Inc.

5.2.3.2 Interrupt Mode

In Interrupt mode, the Alert output is asserted as active-high or active-low (depending on the polarity configuration) when T_A drifts above or below T_{UPPER} and T_{LOWER} limits. The output is deasserted by setting bit 5 (Interrupt Clear bit) of CONFIG. Shutting down the device will not reset or deassert the Alert output. This mode can not be selected when the Alert output is used as a critical temperature output only, using bit 2 of CONFIG.

This mode is designed for interrupt driven microcontroller-based systems. The microcontroller receiving the interrupt will have to Acknowledge the interrupt by setting bit 5 of the CONFIG register from the MCP9808.

5.2.4 TEMPERATURE RESOLUTION

The MCP9808 is capable of providing temperature data with +0.5°C to +0.0625°C resolution. The resolution can be selected using the Resolution register (Register 5-7). It is located at address, '`00001000`'b, and it provides measurement flexibility. A +0.0625°C resolution is set as a POR default by the factory.

TABLE 5-2: TEMPERATURE CONVERSION TIME

Resolution	t_{CONV} (ms)	Samples/sec (typical)
+0.5°C	30	33
+0.25°C	65	15
+0.125°C	130	7
+0.0625°C (Power-up Default)	250	4

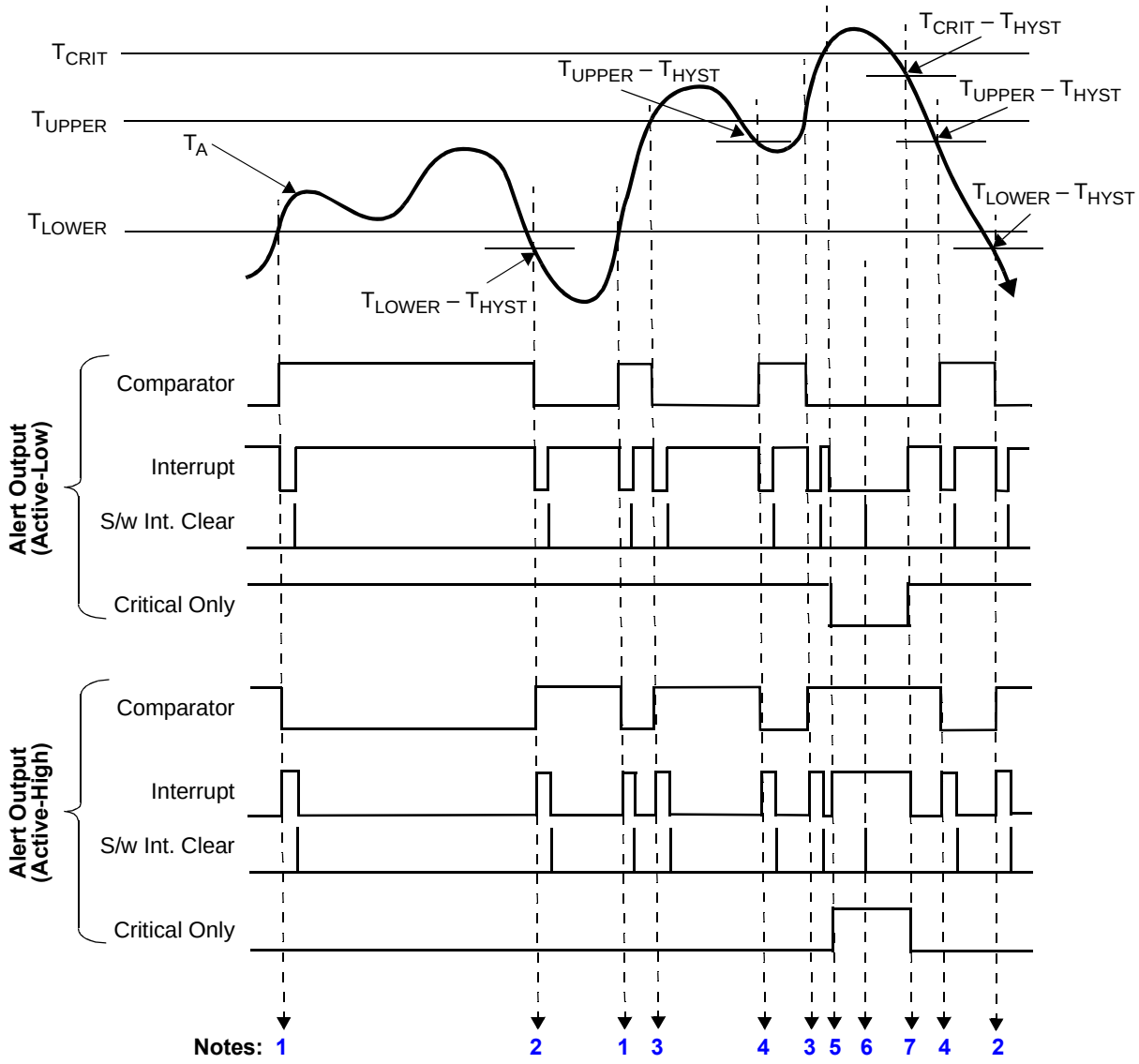

Notes	Alert Output Boundary Conditions	Comparator	Interrupt	Critical	T_A Bits		
		Alert Output (Active-Low/High)			15	14	13
1	$T_A \geq T_{LOWER}$	High/Low	Low/High	High/Low	0	0	0
2	$T_A < T_{LOWER} - T_{HYST}$	Low/High	Low/High	High/Low	0	0	1
3	$T_A > T_{UPPER}$	Low/High	Low/High	High/Low	0	1	0
4	$T_A \leq T_{UPPER} - T_{HYST}$	High/Low	Low/High	High/Low	0	0	0
5	$T_A \geq T_{CRIT}$	Low/High	Low/High	Low/High	1	1	0
6	When $T_A \geq T_{CRIT}$, the Alert output is forced to Comparator mode and the CONFIG<0> (Alert Output Mode bit) is ignored until $T_A < T_{CRIT} - T_{HYST}$. In the Interrupt mode, if the interrupt is not cleared (bit 5 of CONFIG), as shown in the diagram at **Note 6**, then Alert will remain asserted at **Note 7** until the interrupt is cleared by the controller.						
7	$T_A < T_{CRIT} - T_{HYST}$	Low/High	High/Low	High/Low	0	1	0

FIGURE 5-10: *Alert Output Conditions.*

© 2011 Microchip Technology Inc.

5.3 Summary of Power-on Default

The MCP9808 has an internal Power-on Reset (POR) circuit. If the power supply voltage, V_{DD}, glitches below the V_{POR} threshold, the device resets the registers to the power-on default settings.

Table 5-3 shows the power-on default summary for the Temperature Sensor registers.

TABLE 5-3: POWER-ON RESET DEFAULTS

Registers		Default Register Data (Hexadecimal)	Power-Up Default Register Description
Address (Hexadecimal)	Register Name		
0x01	CONFIG	0x0000	Comparator Mode Active-Low Output Alert and Critical Output Output Disabled Alert Not Asserted Interrupt Cleared Alert Limits Unlocked Critical Limit Unlocked Continuous Conversion 0°C Hysteresis
0x02	T_{UPPER}	0x0000	0°C
0x03	T_{LOWER}	0x0000	0°C
0x04	T_{CRIT}	0x0000	0°C
0x05	T_A	0x0000	0°C
0x06	Manufacturer ID	0x0054	0x0054 (hex)
0x07	Device ID/Device Revision	0x0400	0x0400 (hex)
0x08	Resolution	0x03	0x03 (hex)

© 2011 Microchip Technology Inc.

NOTES:

© 2011 Microchip Technology Inc.

6.0 APPLICATIONS INFORMATION

6.1 Layout Considerations

The MCP9808 does not require any additional components besides the master controller in order to measure temperature. However, it is recommended that a decoupling capacitor of 0.1 µF to 1 µF be used between the V_{DD} and GND pins. A high-frequency ceramic capacitor is recommended. It is necessary for the capacitor to be located as close as possible to the power and ground pins of the device in order to provide effective noise protection.

In addition, good PCB layout is key for better thermal conduction from the PCB temperature to the sensor die. For good temperature sensitivity, add a ground layer under the device pins, as shown in Figure 6-1.

6.2 Thermal Considerations

A potential for self-heating errors can exist if the MCP9808 SDA, SCL and Event lines are heavily loaded with pull-ups (high current). Typically, the self-heating error is negligible because of the relatively small current consumption of the MCP9808. A temperature accuracy error of approximately +0.5°C could result from self-heating if the communication pins sink/source the maximum current specified.

For example, if the event output is loaded to maximum I_{OL}, Equation 6-1 can be used to determine the effect of self-heating.

EQUATION 6-1: EFFECT OF SELF-HEATING

$$T_{\Delta} = \theta_{JA}(V_{DD} \bullet I_{DD} + V_{OL_Alert} \bullet I_{OL_Alert} + V_{OL_SDA} \bullet I_{OL_SDA})$$

Where:

T_{Δ} = $T_J - T_A$

T_J = Junction Temperature

T_A = Ambient Temperature

θ_{JA} = Package Thermal Resistance

$V_{OL_Alert,\ SDA}$ = Alert and SDA Output V_{OL} (0.4 V_{max})

$I_{OL_Alert,\ SDA}$ = Alert and SDA Output I_{OL} (3 mA_{max})

At room temperature (T_A = +25°C) with maximum I_{DD} = 500 µA and V_{DD} = 3.6V, the self-heating due to power dissipation T_{Δ} is +0.2°C for the DFN-8 package and +0.5°C for the TSSOP-8 package.

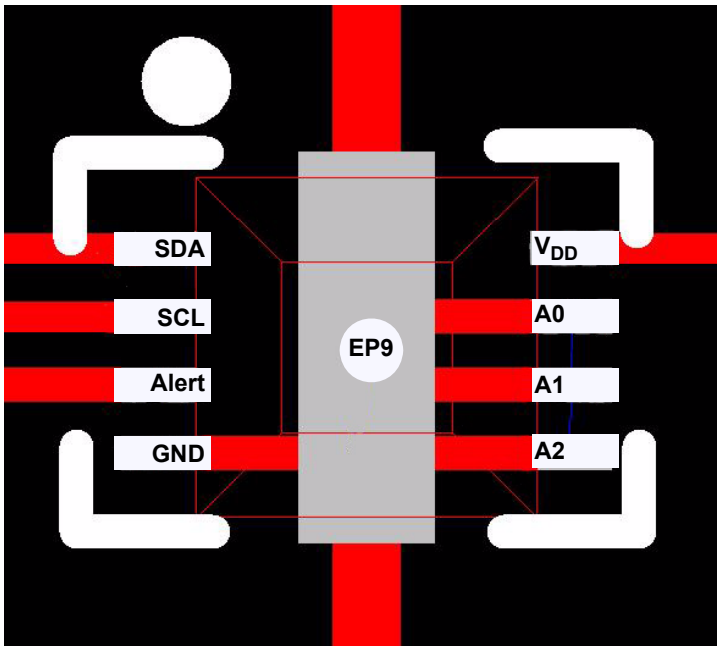

FIGURE 6-1: *DFN Package Layout (Top View).*

NOTES:

© 2011 Microchip Technology Inc.

7.0 PACKAGING INFORMATION

7.1 Package Marking Information

8-Lead DFN (2x3x0.9 mm)

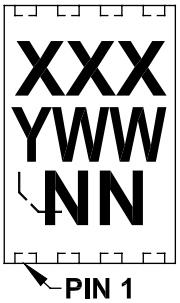

Example

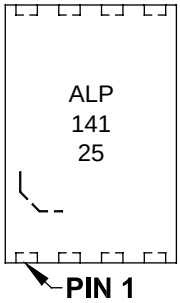

8-Lead MSOP (3x3 mm)

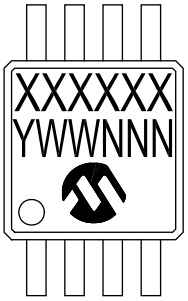

Example

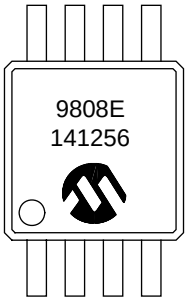

Legend:	XX...X	Customer-specific information
	Y	Year code (last digit of calendar year)
	YY	Year code (last 2 digits of calendar year)
	WW	Week code (week of January 1 is week ‘01’)
	NNN	Alphanumeric traceability code
	(e3)	Pb-free JEDEC designator for Matte Tin (Sn)
	*	This package is Pb-free. The Pb-free JEDEC designator ((e3)) can be found on the outer packaging for this package.

Note: In the event the full Microchip part number cannot be marked on one line, it will be carried over to the next line, thus limiting the number of available characters for customer-specific information.

8-Lead Plastic Dual Flat, No Lead Package (MC) – 2x3x0.9 mm Body [DFN]

Note: For the most current package drawings, please see the Microchip Packaging Specification located at http://www.microchip.com/packaging

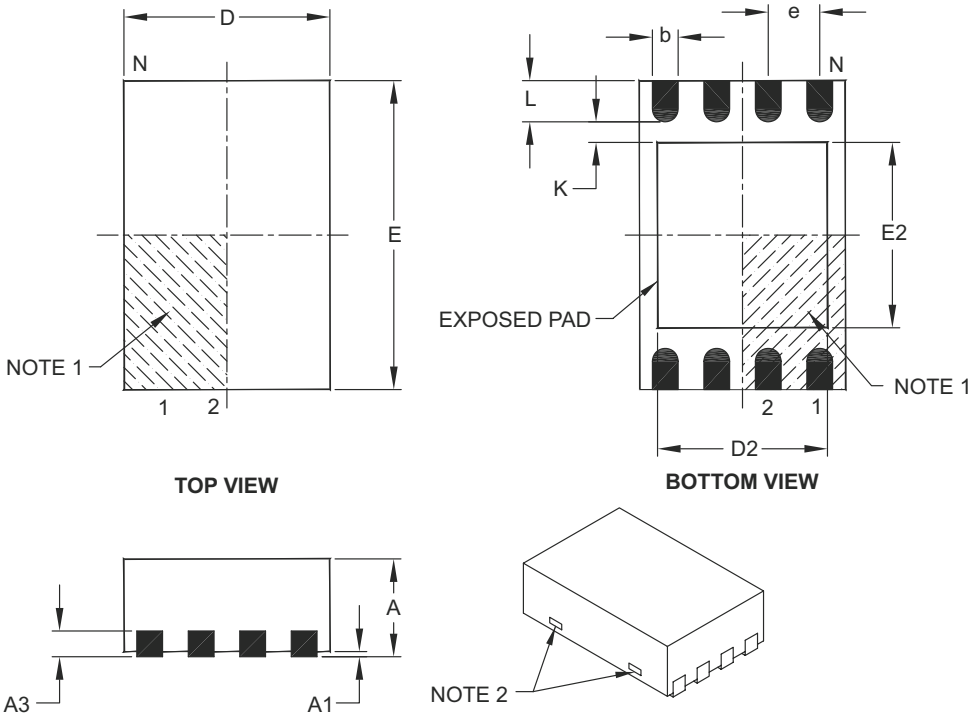

Units		MILLIMETERS		
Dimension Limits		MIN	NOM	MAX
Number of Pins	N	8		
Pitch	e	0.50 BSC		
Overall Height	A	0.80	0.90	1.00
Standoff	A1	0.00	0.02	0.05
Contact Thickness	A3	0.20 REF		
Overall Length	D	2.00 BSC		
Overall Width	E	3.00 BSC		
Exposed Pad Length	D2	1.30	–	1.55
Exposed Pad Width	E2	1.50	–	1.75
Contact Width	b	0.20	0.25	0.30
Contact Length	L	0.30	0.40	0.50
Contact-to-Exposed Pad	K	0.20	–	–

Notes:

1. Pin 1 visual index feature may vary, but must be located within the hatched area.
2. Package may have one or more exposed tie bars at ends.
3. Package is saw singulated.
4. Dimensioning and tolerancing per ASME Y14.5M.

   BSC: Basic Dimension. Theoretically exact value shown without tolerances.

   REF: Reference Dimension, usually without tolerance, for information purposes only.

Microchip Technology Drawing C04-123C

© 2011 Microchip Technology Inc.

8-Lead Plastic Dual Flat, No Lead Package (MC) - 2x3x0.9mm Body [DFN]

Note: For the most current package drawings, please see the Microchip Packaging Specification located at http://www.microchip.com/packaging

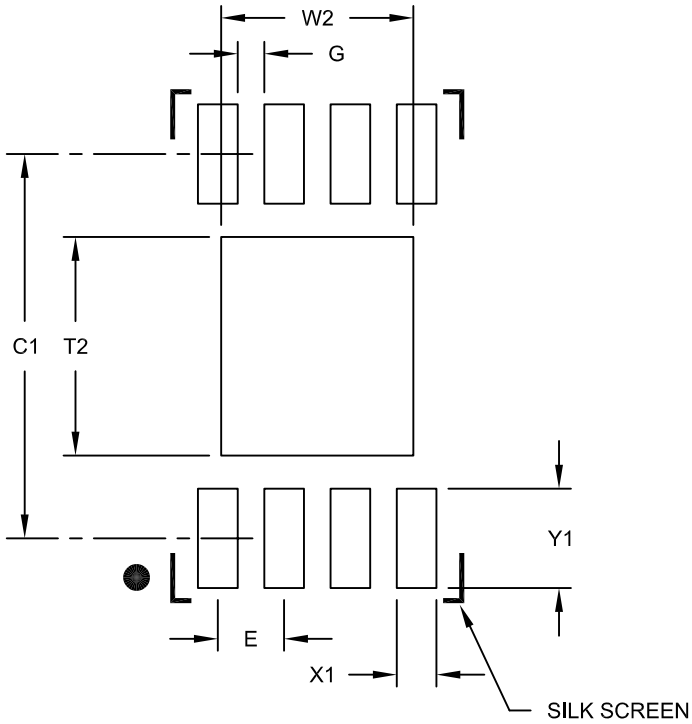

RECOMMENDED LAND PATTERN

Units		MILLIMETERS		
Dimension Limits		MIN	NOM	MAX
Contact Pitch	E		0.50 BSC	
Optional Center Pad Width	W2			1.45
Optional Center Pad Length	T2			1.75
Contact Pad Spacing	C1		2.90	
Contact Pad Width (X8)	X1			0.30
Contact Pad Length (X8)	Y1			0.75
Distance Between Pads	G	0.20		

Notes:

1. Dimensioning and tolerancing per ASME Y14.5M

BSC: Basic Dimension. Theoretically exact value shown without tolerances.

Microchip Technology Drawing No. C04-2123B

8-Lead Plastic Micro Small Outline Package (MS) [MSOP]

Note: For the most current package drawings, please see the Microchip Packaging Specification located at http://www.microchip.com/packaging

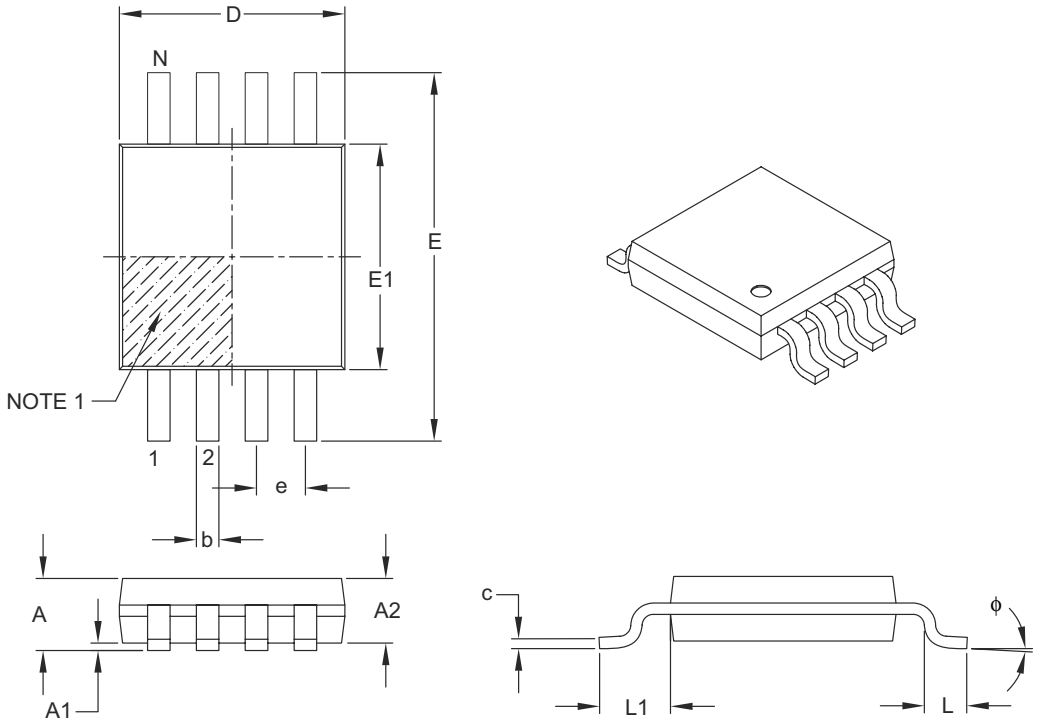

Units		MILLIMETERS		
Dimension Limits		MIN	NOM	MAX
Number of Pins	N	8		
Pitch	e	0.65 BSC		
Overall Height	A	–	–	1.10
Molded Package Thickness	A2	0.75	0.85	0.95
Standoff	A1	0.00	–	0.15
Overall Width	E	4.90 BSC		
Molded Package Width	E1	3.00 BSC		
Overall Length	D	3.00 BSC		
Foot Length	L	0.40	0.60	0.80
Footprint	L1	0.95 REF		
Foot Angle	ϕ	0°	–	8°
Lead Thickness	c	0.08	–	0.23
Lead Width	b	0.22	–	0.40

Notes:

1. Pin 1 visual index feature may vary, but must be located within the hatched area.
2. Dimensions D and E1 do not include mold flash or protrusions. Mold flash or protrusions shall not exceed 0.15 mm per side.
3. Dimensioning and tolerancing per ASME Y14.5M.

   BSC: Basic Dimension. Theoretically exact value shown without tolerances.

   REF: Reference Dimension, usually without tolerance, for information purposes only.

Microchip Technology Drawing C04-111B

© 2011 Microchip Technology Inc.

8-Lead Plastic Micro Small Outline Package (MS) [MSOP]

Note: For the most current package drawings, please see the Microchip Packaging Specification located at http://www.microchip.com/packaging

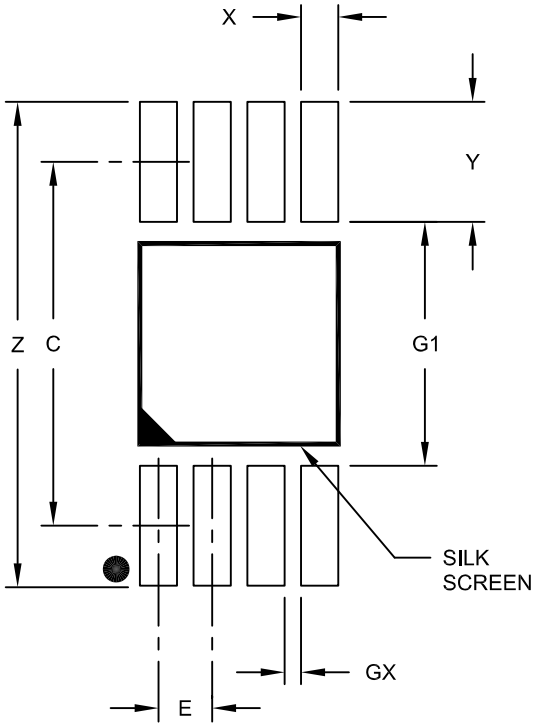

RECOMMENDED LAND PATTERN

Units		MILLIMETERS		
Dimension Limits		MIN	NOM	MAX
Contact Pitch	E		0.65 BSC	
Contact Pad Spacing	C		4.40	
Overall Width	Z			5.85
Contact Pad Width (X8)	X1			0.45
Contact Pad Length (X8)	Y1			1.45
Distance Between Pads	G1	2.95		
Distance Between Pads	GX	0.20		

Notes:

1. Dimensioning and tolerancing per ASME Y14.5M
   BSC: Basic Dimension. Theoretically exact value shown without tolerances.

Microchip Technology Drawing No. C04-2111A

NOTES:

© 2011 Microchip Technology Inc.

Software License Agreement

The software supplied herewith by Microchip Technology Incorporated (the "Company") is intended and supplied to you, the Company's customer, for use solely and exclusively with products manufactured by the Company.

The software is owned by the Company and/or its supplier, and is protected under applicable copyright laws. All rights are reserved. Any use in violation of the foregoing restrictions may subject the user to criminal sanctions under applicable laws, as well as to civil liability for the breach of the terms and conditions of this license.

THIS SOFTWARE IS PROVIDED IN AN "AS IS" CONDITION. NO WARRANTIES, WHETHER EXPRESS, IMPLIED OR STATUTORY, INCLUDING, BUT NOT LIMITED TO, IMPLIED WARRANTIES OF MERCHANTABILITY AND FITNESS FOR A PARTICULAR PURPOSE APPLY TO THIS SOFTWARE. THE COMPANY SHALL NOT, IN ANY CIRCUMSTANCES, BE LIABLE FOR SPECIAL, INCIDENTAL OR CONSEQUENTIAL DAMAGES, FOR ANY REASON WHATSOEVER.

APPENDIX A: SOURCE CODE

```
/*******************************************************************
 FileName:     I2C.c
 Processor:   PIC18 Microcontrollers
 Complier:    Microchip C18 (for PIC18) or C30 (for PIC24)
 Company:     Microchip Technology, Inc.

#include <p18cxxx.h> // This code is developed for PIC18F2550
//It can be modified to be used with any PICmicro with MSSP module

/** PRIVATE PROTOTYPES ********************************************/
void i2c_init(void);
void i2c_start(void);
void i2c_repStart(void);
void i2c_stop(void);
unsigned char i2c_write( unsigned char i2cWriteData );
unsigned char i2c_read( unsigned char ack );


/*******************************************************************
*   Function Name:  i2c_init
*   Return Value:   void
*   Parameters:     Enable SSP
*   Description:    This function sets up the SSP1 module on a
*                   PIC18CXXX device for use with a Microchip I2C
*******************************************************************/
void i2c_init(void) {

    TRISBbits.TRISB0 = 1;         // Digital Output (make it input only when reading data)
    TRISBbits.TRISB1 = 1;         // Digital Output

    SSPCON1 = 0x28;               // enable I2C Master mode
    SSPCON2 = 0x00;               // clear control bits
    SSPSTAT = 0x80;               // disable slew rate control; disable SMBus

    SSPADD = 19;                  // set baud rate to 100 kHz (Fosc = 48 MHz)

    PIR1bits.SSPIF = 0;
    PIR2bits.BCLIF = 0;

    SSPCON2bits.SEN = 0;          // force idle condition

}
```

```
/*******************************************************************
*     Function Name:    i2c_start
*     Return Value:     void
*     Parameters:       void
*     Description:      Send I2C Start Command
*******************************************************************/
void i2c_start(void) {

    PIR1bits.SSPIF = 0;  //clear flag
    while (SSPSTATbits.BF );   // wait for idle condition

    SSPCON2bits.SEN = 1;        // initiate START condition

    while (!PIR1bits.SSPIF) ;   // wait for a flag to be set
    PIR1bits.SSPIF = 0;  // clear flag
}

/*******************************************************************
*     Function Name:    i2c_repStart
*     Return Value:     void
*     Parameters:       void
*     Description:      Resend I2C Start Command
*
*******************************************************************/
void i2c_repStart(void) {

    PIR1bits.SSPIF = 0; // clear flag
    while ( SSPSTATbits.BF ) ;  // wait for idle condition

    SSPCON2bits.RSEN = 1;        // initiate Repeated START condition

    while (!PIR1bits.SSPIF) ;  // wait for a flag to be set
    PIR1bits.SSPIF = 0; // clear flag

}

/*******************************************************************
*     Function Name:    i2c_stop
*     Return Value:     void
*     Parameters:       void
*     Description:      Send I2C Stop command
*
*******************************************************************/
void i2c_stop(void) {

    PIR1bits.SSPIF = 0; // clear flag
    while ( SSPSTATbits.BF ) ;  // wait for idle condition

    SSPCON2bits.PEN = 1;         // Initiate STOP condition

    while (!PIR1bits.SSPIF) ;  // wait for a flag to be set
    PIR1bits.SSPIF = 0; // clear flag

}
```


© 2011 Microchip Technology Inc.

```
/*******************************************************************
*     Function Name:    i2c_write
*     Return Value:     Status byte for WCOL detection.
*     Parameters:       Single data byte for I2C2 bus.
*     Description:      This routine writes a single byte to the
*                       I2C2 bus.
*******************************************************************/
unsigned char i2c_write( unsigned char i2cWriteData ) {

    PIR1bits.SSPIF = 0; // clear interrupt
    while ( SSPSTATbits.BF ) ;  // wait for idle condition

    SSPBUF = i2cWriteData;       // Load SSPBUF with i2cWriteData (the value to be transmit-
ted)

    while (!PIR1bits.SSPIF) ;  // wait for a flag to be set
    PIR1bits.SSPIF = 0; // clear flag

    return ( !SSPCON2bits.ACKSTAT ); // function returns '1' if transmission is acknowledged

}


/*******************************************************************
*     Function Name:    i2c_read
*     Return Value:     contents of SSP2BUF register
*     Parameters:       ack = 1 and nak = 0
*     Description:      Read a byte from I2C bus and ACK/NAK device
*******************************************************************/
unsigned char i2c_read( unsigned char ack ) {

    unsigned char i2cReadData;

    PIR1bits.SSPIF = 0;// clear interrupt

    while ( SSPSTATbits.BF ) ; // wait for idle condition
    SSPCON2bits.RCEN = 1;       // enable receive mode

    while (!PIR1bits.SSPIF) ; // wait for a flag to be set
    PIR1bits.SSPIF = 0;// clear flag

    i2cReadData = SSPBUF;       // Read SSPBUF and put it in i2cReadData

    if ( ack ) {                // if ack=1
        SSPCON2bits.ACKDT = 0;  //   then transmit an Acknowledge
    } else {
        SSPCON2bits.ACKDT = 1;  //   otherwise transmit a Not Acknowledge
    }

    SSPCON2bits.ACKEN = 1;      // send acknowledge sequence

    while (!PIR1bits.SSPIF) ; // wait for a flag to be set
    PIR1bits.SSPIF = 0;// clear flag

    return( i2cReadData );      // return the value read from SSPBUF

}
```

NOTES:

© 2011 Microchip Technology Inc.

APPENDIX B: REVISION HISTORY

Revision A (October 2011)

- Original Release of this Document.

NOTES:

© 2011 Microchip Technology Inc.

PRODUCT IDENTIFICATION SYSTEM

To order or obtain information, e.g., on pricing or delivery, refer to the factory or the listed sales office.

PART NO.	X	-X	/XX
Device	Tape and Reel and/or Alternate Pinout	Temperature Range	Package

Device:	MCP9808:	Digital Temperature Sensor
	MCP9808T:	Digital Temperature Sensor (Tape and Reel)
Temperature Range:	E =	-40°C to +125°C
Package:	MC =	Plastic Dual Flat No-Lead (DFN) 2x3, 8-lead
	MS =	Plastic Micro Small Outline (MSOP), 8-lead

Examples:

a) MCP9808-E/MC: Extended Temperature 8LD DFN package.

b) MCP9808-E/MS: Extended Temperature 8LD MSOP package.

c) MCP9808T-E/MC: Tape and Reel, Extended Temperature 8LD DFN package.

d) MCP9808T-E/MS: Tape and Reel, Extended Temperature 8LD MSOP package.

NOTES:

© 2011 Microchip Technology Inc.

Note the following details of the code protection feature on Microchip devices:

- Microchip products meet the specification contained in their particular Microchip Data Sheet.
- Microchip believes that its family of products is one of the most secure families of its kind on the market today, when used in the intended manner and under normal conditions.
- There are dishonest and possibly illegal methods used to breach the code protection feature. All of these methods, to our knowledge, require using the Microchip products in a manner outside the operating specifications contained in Microchip's Data Sheets. Most likely, the person doing so is engaged in theft of intellectual property.
- Microchip is willing to work with the customer who is concerned about the integrity of their code.
- Neither Microchip nor any other semiconductor manufacturer can guarantee the security of their code. Code protection does not mean that we are guaranteeing the product as "unbreakable."

Code protection is constantly evolving. We at Microchip are committed to continuously improving the code protection features of our products. Attempts to break Microchip's code protection feature may be a violation of the Digital Millennium Copyright Act. If such acts allow unauthorized access to your software or other copyrighted work, you may have a right to sue for relief under that Act.

Information contained in this publication regarding device applications and the like is provided only for your convenience and may be superseded by updates. It is your responsibility to ensure that your application meets with your specifications. MICROCHIP MAKES NO REPRESENTATIONS OR WARRANTIES OF ANY KIND WHETHER EXPRESS OR IMPLIED, WRITTEN OR ORAL, STATUTORY OR OTHERWISE, RELATED TO THE INFORMATION, INCLUDING BUT NOT LIMITED TO ITS CONDITION, QUALITY, PERFORMANCE, MERCHANTABILITY OR FITNESS FOR PURPOSE**.** Microchip disclaims all liability arising from this information and its use. Use of Microchip devices in life support and/or safety applications is entirely at the buyer's risk, and the buyer agrees to defend, indemnify and hold harmless Microchip from any and all damages, claims, suits, or expenses resulting from such use. No licenses are conveyed, implicitly or otherwise, under any Microchip intellectual property rights.

QUALITY MANAGEMENT SYSTEM
CERTIFIED BY DNV
ISO/TS 16949:2009

Trademarks

The Microchip name and logo, the Microchip logo, dsPIC, KEELOQ, KEELOQ logo, MPLAB, PIC, PICmicro, PICSTART, PIC32 logo, rfPIC and UNI/O are registered trademarks of Microchip Technology Incorporated in the U.S.A. and other countries.

FilterLab, Hampshire, HI-TECH C, Linear Active Thermistor, MXDEV, MXLAB, SEEVAL and The Embedded Control Solutions Company are registered trademarks of Microchip Technology Incorporated in the U.S.A.

Analog-for-the-Digital Age, Application Maestro, chipKIT, chipKIT logo, CodeGuard, dsPICDEM, dsPICDEM.net, dsPICworks, dsSPEAK, ECAN, ECONOMONITOR, FanSense, HI-TIDE, In-Circuit Serial Programming, ICSP, Mindi, MiWi, MPASM, MPLAB Certified logo, MPLIB, MPLINK, mTouch, Omniscient Code Generation, PICC, PICC-18, PICDEM, PICDEM.net, PICkit, PICtail, REAL ICE, rfLAB, Select Mode, Total Endurance, TSHARC, UniWinDriver, WiperLock and ZENA are trademarks of Microchip Technology Incorporated in the U.S.A. and other countries.

SQTP is a service mark of Microchip Technology Incorporated in the U.S.A.

All other trademarks mentioned herein are property of their respective companies.

© 2011, Microchip Technology Incorporated, Printed in the U.S.A., All Rights Reserved.

Printed on recycled paper.

ISBN: 978-1-61341-739-3

Microchip received ISO/TS-16949:2009 certification for its worldwide headquarters, design and wafer fabrication facilities in Chandler and Tempe, Arizona; Gresham, Oregon and design centers in California and India. The Company's quality system processes and procedures are for its PIC® MCUs and dsPIC® DSCs, KEELOQ® code hopping devices, Serial EEPROMs, microperipherals, nonvolatile memory and analog products. In addition, Microchip's quality system for the design and manufacture of development systems is ISO 9001:2000 certified.

Worldwide Sales and Service

AMERICAS

Corporate Office
2355 West Chandler Blvd.
Chandler, AZ 85224-6199
Tel: 480-792-7200
Fax: 480-792-7277
Technical Support:
http://www.microchip.com/support
Web Address:
www.microchip.com

Atlanta
Duluth, GA
Tel: 678-957-9614
Fax: 678-957-1455

Boston
Westborough, MA
Tel: 774-760-0087
Fax: 774-760-0088

Chicago
Itasca, IL
Tel: 630-285-0071
Fax: 630-285-0075

Cleveland
Independence, OH
Tel: 216-447-0464
Fax: 216-447-0643

Dallas
Addison, TX
Tel: 972-818-7423
Fax: 972-818-2924

Detroit
Farmington Hills, MI
Tel: 248-538-2250
Fax: 248-538-2260

Indianapolis
Noblesville, IN
Tel: 317-773-8323
Fax: 317-773-5453

Los Angeles
Mission Viejo, CA
Tel: 949-462-9523
Fax: 949-462-9608

Santa Clara
Santa Clara, CA
Tel: 408-961-6444
Fax: 408-961-6445

Toronto
Mississauga, Ontario, Canada
Tel: 905-673-0699
Fax: 905-673-6509

ASIA/PACIFIC

Asia Pacific Office
Suites 3707-14, 37th Floor
Tower 6, The Gateway
Harbour City, Kowloon
Hong Kong
Tel: 852-2401-1200
Fax: 852-2401-3431

Australia - Sydney
Tel: 61-2-9868-6733
Fax: 61-2-9868-6755

China - Beijing
Tel: 86-10-8569-7000
Fax: 86-10-8528-2104

China - Chengdu
Tel: 86-28-8665-5511
Fax: 86-28-8665-7889

China - Chongqing
Tel: 86-23-8980-9588
Fax: 86-23-8980-9500

China - Hangzhou
Tel: 86-571-2819-3187
Fax: 86-571-2819-3189

China - Hong Kong SAR
Tel: 852-2401-1200
Fax: 852-2401-3431

China - Nanjing
Tel: 86-25-8473-2460
Fax: 86-25-8473-2470

China - Qingdao
Tel: 86-532-8502-7355
Fax: 86-532-8502-7205

China - Shanghai
Tel: 86-21-5407-5533
Fax: 86-21-5407-5066

China - Shenyang
Tel: 86-24-2334-2829
Fax: 86-24-2334-2393

China - Shenzhen
Tel: 86-755-8203-2660
Fax: 86-755-8203-1760

China - Wuhan
Tel: 86-27-5980-5300
Fax: 86-27-5980-5118

China - Xian
Tel: 86-29-8833-7252
Fax: 86-29-8833-7256

China - Xiamen
Tel: 86-592-2388138
Fax: 86-592-2388130

China - Zhuhai
Tel: 86-756-3210040
Fax: 86-756-3210049

ASIA/PACIFIC

India - Bangalore
Tel: 91-80-3090-4444
Fax: 91-80-3090-4123

India - New Delhi
Tel: 91-11-4160-8631
Fax: 91-11-4160-8632

India - Pune
Tel: 91-20-2566-1512
Fax: 91-20-2566-1513

Japan - Yokohama
Tel: 81-45-471- 6166
Fax: 81-45-471-6122

Korea - Daegu
Tel: 82-53-744-4301
Fax: 82-53-744-4302

Korea - Seoul
Tel: 82-2-554-7200
Fax: 82-2-558-5932 or
82-2-558-5934

Malaysia - Kuala Lumpur
Tel: 60-3-6201-9857
Fax: 60-3-6201-9859

Malaysia - Penang
Tel: 60-4-227-8870
Fax: 60-4-227-4068

Philippines - Manila
Tel: 63-2-634-9065
Fax: 63-2-634-9069

Singapore
Tel: 65-6334-8870
Fax: 65-6334-8850

Taiwan - Hsin Chu
Tel: 886-3-5778-366
Fax: 886-3-5770-955

Taiwan - Kaohsiung
Tel: 886-7-536-4818
Fax: 886-7-330-9305

Taiwan - Taipei
Tel: 886-2-2500-6610
Fax: 886-2-2508-0102

Thailand - Bangkok
Tel: 66-2-694-1351
Fax: 66-2-694-1350

EUROPE

Austria - Wels
Tel: 43-7242-2244-39
Fax: 43-7242-2244-393

Denmark - Copenhagen
Tel: 45-4450-2828
Fax: 45-4485-2829

France - Paris
Tel: 33-1-69-53-63-20
Fax: 33-1-69-30-90-79

Germany - Munich
Tel: 49-89-627-144-0
Fax: 49-89-627-144-44

Italy - Milan
Tel: 39-0331-742611
Fax: 39-0331-466781

Netherlands - Drunen
Tel: 31-416-690399
Fax: 31-416-690340

Spain - Madrid
Tel: 34-91-708-08-90
Fax: 34-91-708-08-91

UK - Wokingham
Tel: 44-118-921-5869
Fax: 44-118-921-5820

08/02/11

© 2011 Microchip Technology Inc.