LM135/LM235/LM335, LM135A/LM235A/LM335A Precision Temperature Sensors

Check for Samples: LM135, LM135A, LM235, LM235A, LM335, LM335A

FEATURES

- **Directly Calibrated in °Kelvin**
- **1°C Initial Accuracy Available**
- **Operates from 400 µA to 5 mA**
- **Less than 1Ω Dynamic Impedance**
- **Easily Calibrated**
- **Wide Operating Temperature Range**
- **200°C Overrange**
- **Low Cost**

DESCRIPTION

The LM135 series are precision, easily-calibrated, integrated circuit temperature sensors. Operating as a 2-terminal zener, the LM135 has a breakdown voltage directly proportional to absolute temperature at +10 mV/°K. With less than 1Ω dynamic impedance the device operates over a current range of 400 µA to 5 mA with virtually no change in performance. When calibrated at 25°C the LM135 has typically less than 1°C error over a 100°C temperature range. Unlike other sensors the LM135 has a linear output.

Applications for the LM135 include almost any type of temperature sensing over a −55°C to 150°C temperature range. The low impedance and linear output make interfacing to readout or control circuitry especially easy.

The LM135 operates over a −55°C to 150°C temperature range while the LM235 operates over a −40°C to 125°C temperature range. The LM335 operates from −40°C to 100°C. The LM135/LM235/LM335 are available packaged in hermetic TO transistor packages while the LM335 is also available in plastic TO-92 packages.

Schematic Diagram

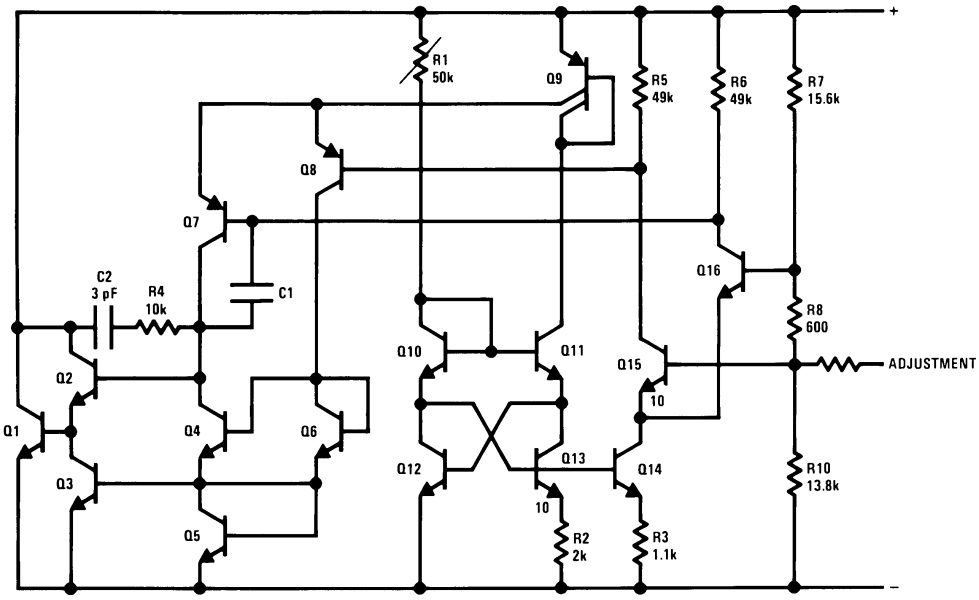

These devices have limited built-in ESD protection. The leads should be shorted together or the device placed in conductive foam during storage or handling to prevent electrostatic damage to the MOS gates.

Please be aware that an important notice concerning availability, standard warranty, and use in critical applications of Texas Instruments semiconductor products and disclaimers thereto appears at the end of this data sheet.

All trademarks are the property of their respective owners.

PRODUCTION DATA information is current as of publication date. Products conform to specifications per the terms of the Texas Instruments standard warranty. Production processing does not necessarily include testing of all parameters.

Copyright © 1999–2013, Texas Instruments Incorporated

Absolute Maximum Ratings[1][2]

Reverse Current		15 mA
Forward Current		10 mA
Storage Temperature		
8-Pin SOIC Package		−65°C to 150°C
TO-92 Package		−60°C to 150°C
TO Package		−60°C to 180°C
Specified Operating Temp. Range		
	Continuous	**Intermittent**[3]
LM135, LM135A	−55°C to 150°C	150°C to 200°C
LM235, LM235A	−40°C to 125°C	125°C to 150°C
LM335, LM335A	−40°C to 100°C	100°C to 125°C
Lead Temp. (Soldering, 10 seconds)		
8-Pin SOIC Package:		300°C
Vapor Phase (60 seconds):		215°C
Infrared (15 seconds):		220°C
TO-92 Package:		260°C
TO Package:		300°C

(1) Refer to RETS135H for military specifications.
(2) If Military/Aerospace specified devices are required, please contact the TI Sales Office/Distributors for availability and specifications.
(3) Continuous operation at these temperatures for 10,000 hours for NDV package and 5,000 hours for LP package may decrease life expectancy of the device.

Temperature Accuracy[1]

LM135/LM235, LM135A/LM235A

Parameter	Conditions	LM135A/LM235A			LM135/LM235			Units
		Min	Typ	Max	Min	Typ	Max	
Operating Output Voltage	T_C = 25°C, I_R = 1 mA	2.97	2.98	2.99	2.95	2.98	3.01	V
Uncalibrated Temperature Error	T_C = 25°C, I_R = 1 mA		0.5	1		1	3	°C
Uncalibrated Temperature Error	$T_{MIN} \le T_C \le T_{MAX}$, I_R = 1 mA		1.3	2.7		2	5	°C
Temperature Error with 25°C	$T_{MIN} \le T_C \le T_{MAX}$, I_R = 1 mA		0.3	1		0.5	1.5	°C
Calibration								
Calibrated Error at Extended	$T_C = T_{MAX}$ (Intermittent)		2			2		°C
Temperatures								
Non-Linearity	I_R = 1 mA		0.3	0.5		0.3	1	°C

(1) Accuracy measurements are made in a well-stirred oil bath. For other conditions, self heating must be considered.

Temperature Accuracy[1]

LM335, LM335A

Parameter	Conditions	LM335A			LM335			Units
		Min	Typ	Max	Min	Typ	Max	
Operating Output Voltage	T_C = 25°C, I_R = 1 mA	2.95	2.98	3.01	2.92	2.98	3.04	V
Uncalibrated Temperature Error	T_C = 25°C, I_R = 1 mA		1	3		2	6	°C
Uncalibrated Temperature Error	$T_{MIN} \le T_C \le T_{MAX}$, I_R = 1 mA		2	5		4	9	°C
Temperature Error with 25°C	$T_{MIN} \le T_C \le T_{MAX}$, I_R = 1 mA		0.5	1		1	2	°C
Calibration								
Calibrated Error at Extended	$T_C = T_{MAX}$ (Intermittent)		2			2		°C
Temperatures								
Non-Linearity	I_R = 1 mA		0.3	1.5		0.3	1.5	°C

(1) Accuracy measurements are made in a well-stirred oil bath. For other conditions, self heating must be considered.

Copyright © 1999–2013, Texas Instruments Incorporated

Electrical Characteristics (1)

		LM135/LM235			LM335			
Parameter	**Conditions**	**LM135A/LM235A**			**LM335A**			**Units**
		Min	**Typ**	**Max**	**Min**	**Typ**	**Max**	
Operating Output Voltage	400 μA ≤ I_R ≤ 5 mA		2.5	10		3	14	mV
Change with Current	At Constant Temperature							
Dynamic Impedance	I_R = 1 mA		0.5			0.6		Ω
Output Voltage Temperature			+10			+10		mV/°C
Coefficient								
Time Constant	Still Air		80			80		sec
	100 ft/Min Air		10			10		sec
	Stirred Oil		1			1		sec
Time Stability	T_C = 125°C		0.2			0.2		°C/khr

(1) Accuracy measurements are made in a well-stirred oil bath. For other conditions, self heating must be considered.

Thermal Resistance	8-Pin SOIC	TO-92	TO
θ_{JA} (Junction to Ambient)	165°C/W	202°C/W	400°C/W
θ_{JC} (Junction to Case)	N/A	170°C/W	N/A

CONNECTION DIAGRAMS

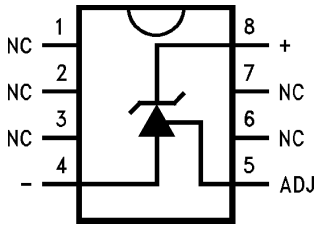

Figure 1. 8-Pin SOIC Surface Mount Package Top View Package Number M08A

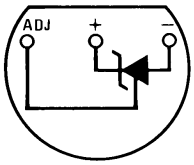

Figure 2. TO-92 Plastic Package Bottom View Package Z03A

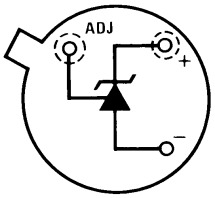

Figure 3. TO Metal Can Package (1) Bottom View Package Number H03H

(1) Case is connected to negative pin.

Typical Performance Characteristics

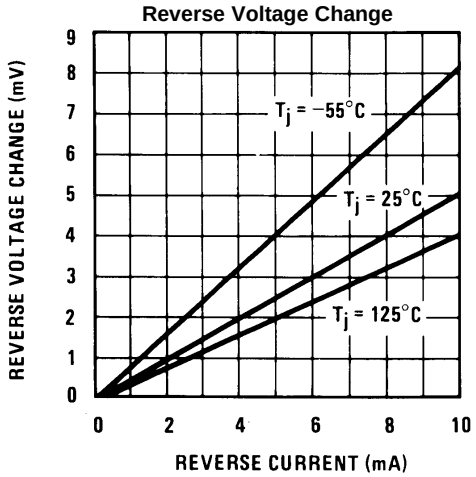

Figure 4.

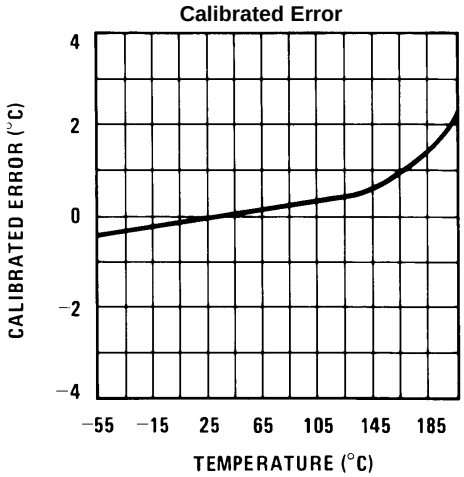

Figure 5.

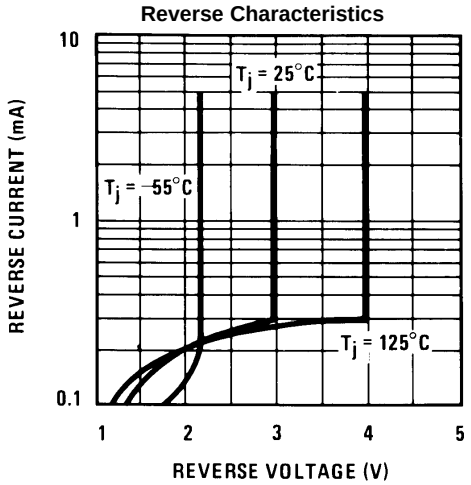

Figure 6.

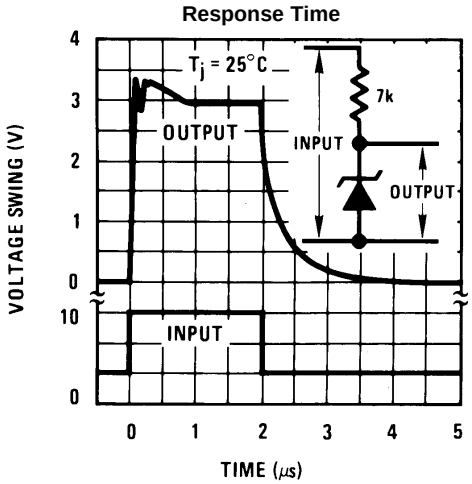

Figure 7.

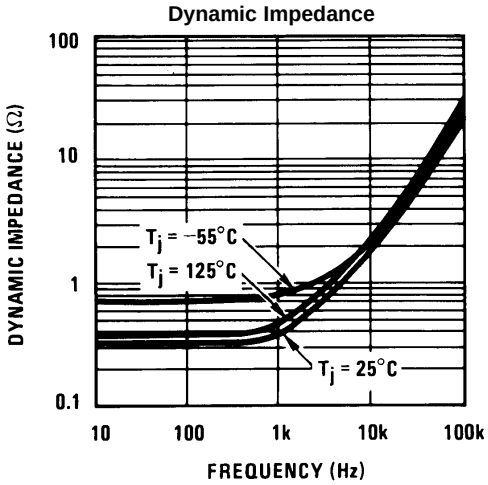

Figure 8.

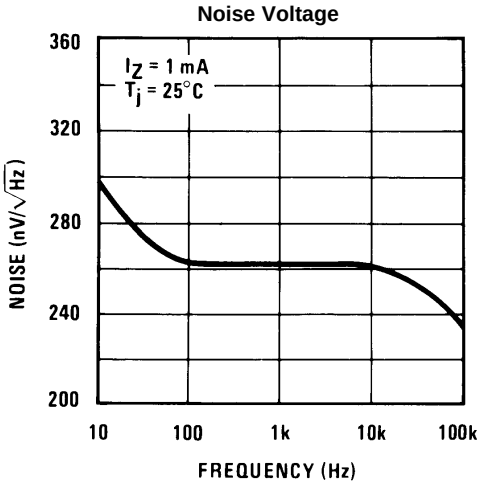

Figure 9.

Copyright © 1999–2013, Texas Instruments Incorporated

Typical Performance Characteristics (continued)

Thermal Resistance Junction to Air

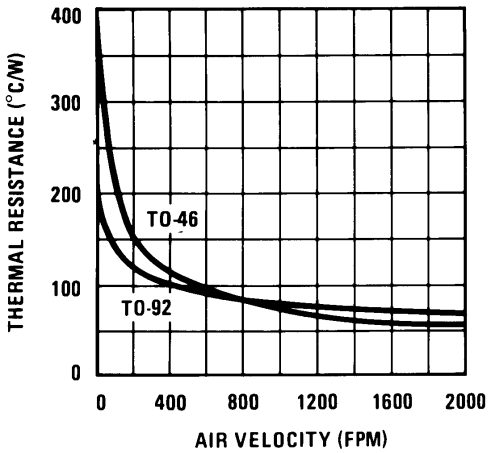

Figure 10.

Thermal Time Constant

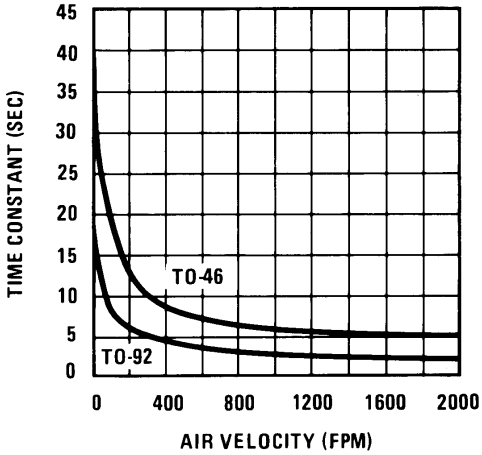

Figure 11.

Thermal Response in Still Air

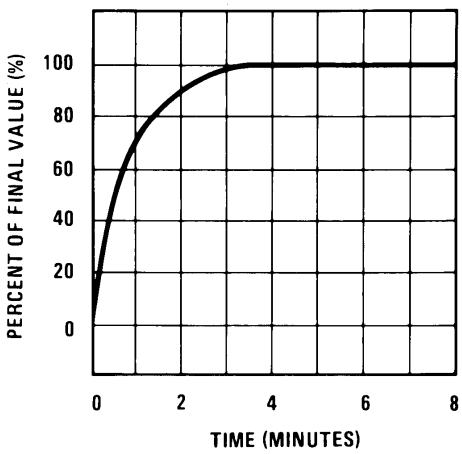

Figure 12.

Thermal Response in Stirred Oil Bath

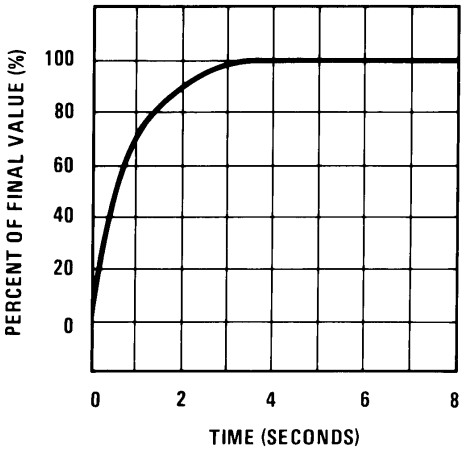

Figure 13.

Forward Characteristics

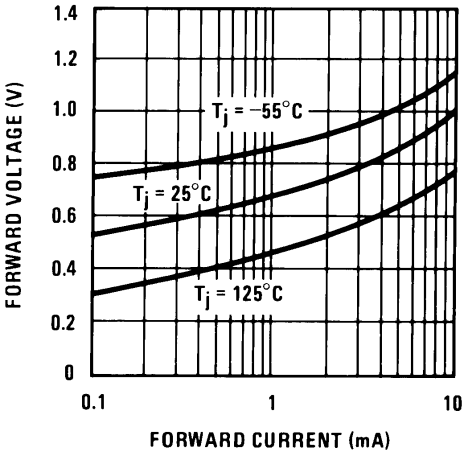

Figure 14.

APPLICATION INFORMATION

CALIBRATING THE LM135

Included on the LM135 chip is an easy method of calibrating the device for higher accuracies. A pot connected across the LM135 with the arm tied to the adjustment terminal allows a 1-point calibration of the sensor that corrects for inaccuracy over the full temperature range.

This single point calibration works because the output of the LM135 is proportional to absolute temperature with the extrapolated output of sensor going to 0V output at 0°K (−273.15°C). Errors in output voltage versus temperature are only slope (or scale factor) errors so a slope calibration at one temperature corrects at all temperatures.

The output of the device (calibrated or uncalibrated) can be expressed as:

$$V_{OUT_T} = V_{OUT_{T_o}} \times \frac{T}{T_o} \tag{1}$$

where T is the unknown temperature and T_o is a reference temperature, both expressed in degrees Kelvin. By calibrating the output to read correctly at one temperature the output at all temperatures is correct. Nominally the output is calibrated at 10 mV/°K.

To insure good sensing accuracy several precautions must be taken. Like any temperature sensing device, self heating can reduce accuracy. The LM135 should be operated at the lowest current suitable for the application. Sufficient current, of course, must be available to drive both the sensor and the calibration pot at the maximum operating temperature as well as any external loads.

If the sensor is used in an ambient where the thermal resistance is constant, self heating errors can be calibrated out. This is possible if the device is run with a temperature stable current. Heating will then be proportional to zener voltage and therefore temperature. This makes the self heating error proportional to absolute temperature the same as scale factor errors.

WATERPROOFING SENSORS

Meltable inner core heat shrinkable tubing such as manufactured by Raychem can be used to make low-cost waterproof sensors. The LM335 is inserted into the tubing about ½″ from the end and the tubing heated above the melting point of the core. The unfilled ½″ end melts and provides a seal over the device.

Typical Applications

Figure 15. Basic Temperature Sensor

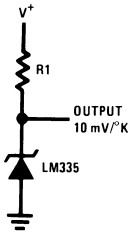

Figure 16. Calibrated Sensor

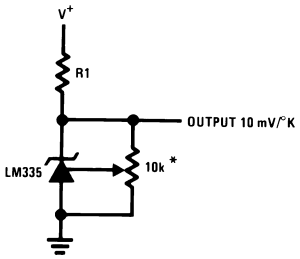

*Calibrate for 2.982V at 25°C

Figure 17. Wide Operating Supply

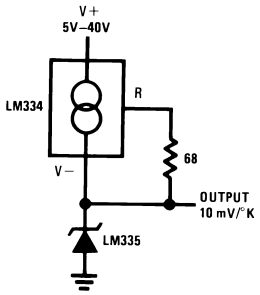

Copyright © 1999–2013, Texas Instruments Incorporated

Figure 18. Minimum Temperature Sensing

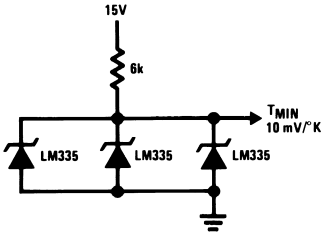

Figure 19. Average Temperature Sensing

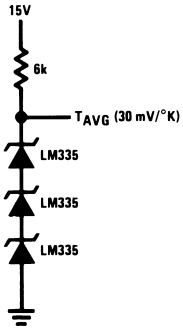

Figure 20. Remote Temperature Sensing

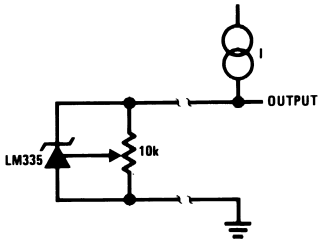

Wire length for 1°C error due to wire drop

	I_R = 1 mA	I_R = 0.5 mA (1)
AWG	**FEET**	**FEET**
14	4000	8000
16	2500	5000
18	1600	3200
20	1000	2000
22	625	1250
24	400	800

(1) For I_R = 0.5 mA, the trim pot must be deleted.

Figure 21. Isolated Temperature Sensor

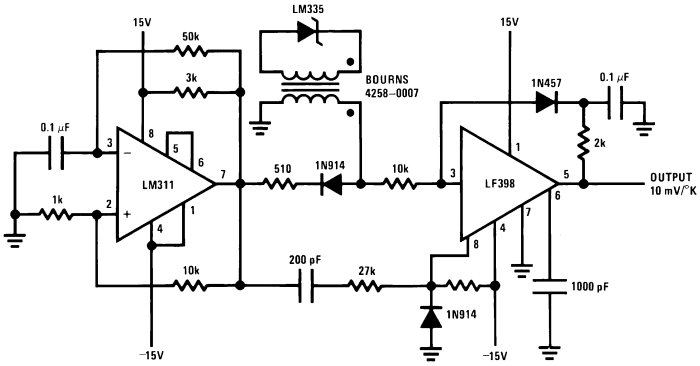

Figure 22. Simple Temperature Controller

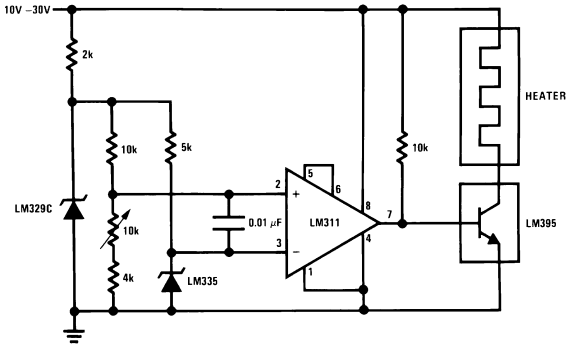

Figure 23. Simple Temperature Control

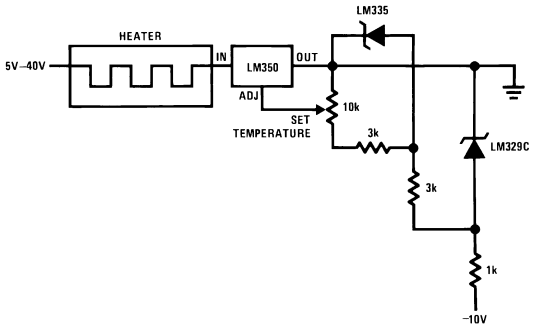

Figure 24. Ground Referred Fahrenheit Thermometer

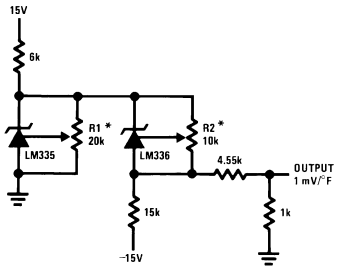

*Adjust R2 for 2.554V across LM336.
Adjust R1 for correct output.

Figure 25. Centigrade Thermometer

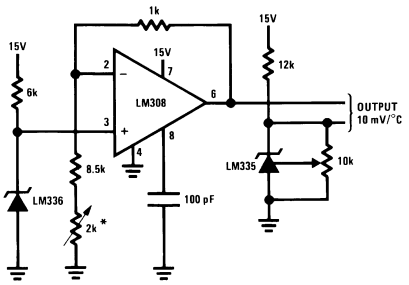

*Adjust for 2.7315V at output of LM308

Copyright © 1999–2013, Texas Instruments Incorporated

Figure 26. Fahrenheit Thermometer

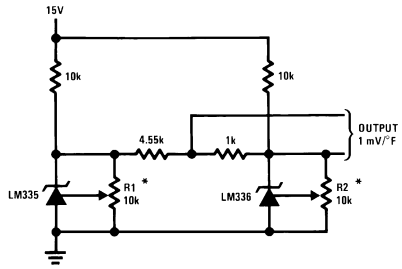

*To calibrate adjust R2 for 2.554V across LM336.
Adjust R1 for correct output.

Figure 27. THERMOCOUPLE COLD JUNCTION COMPENSATION

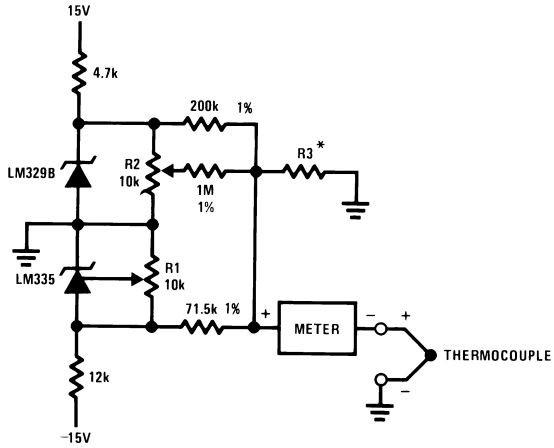

Compensation for Grounded Thermocouple

*Select R3 for proper thermocouple type

THERMO-COUPLE	R3 (±1%)	SEEBECK COEFFICIENT
J	377Ω	52.3 μV/°C
T	308Ω	42.8 μV/°C
K	293Ω	40.8 μV/°C
S	45.8Ω	6.4 μV/°C

Adjustments: Compensates for both sensor and resistor tolerances

1. Short LM329B
2. Adjust R1 for Seebeck Coefficient times ambient temperature (in degrees K) across R3.
3. Short LM335 and adjust R2 for voltage across R3 corresponding to thermocouple type.

J 14.32 mV K 11.17 mV

T 11.79 mV S 1.768 mV

Copyright © 1999–2013, Texas Instruments Incorporated

Figure 28. Single Power Supply Cold Junction Compensation

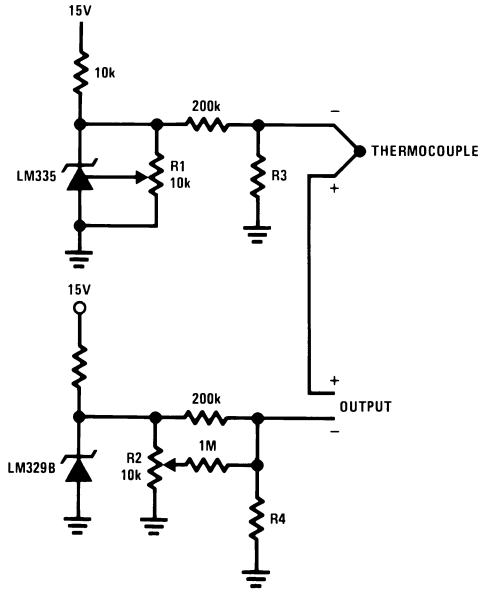

*Select R3 and R4 for thermocouple type

THERMO-COUPLE	R3	R4	SEEBECK COEFFICIENT
J	1.05K	385Ω	52.3 µV/°C
T	856Ω	315Ω	42.8 µV/°C
K	816Ω	300Ω	40.8 µV/°C
S	128Ω	46.3Ω	6.4 µV/°C
Adjustments: 1. Adjust R1 for the voltage across R3 equal to the Seebeck Coefficient times ambient temperature in degrees Kelvin. 2. Adjust R2 for voltage across R4 corresponding to thermocouple.			
J	14.32 mV		
T	11.79 mV		
K	11.17 mV		
S	1.768 mV		

Copyright © 1999–2013, Texas Instruments Incorporated

Figure 29. Centigrade Calibrated Thermocouple Thermometer

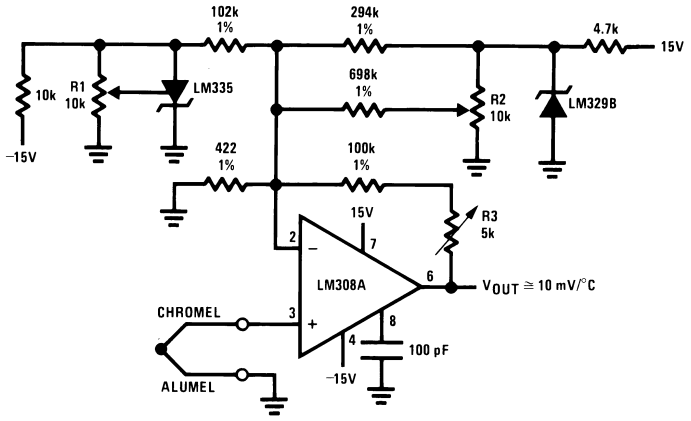

Terminate thermocouple reference junction in close proximity to LM335.

Adjustments:

1. Apply signal in place of thermocouple and adjust R3 for a gain of 245.7.
2. Short non-inverting input of LM308A and output of LM329B to ground.
3. Adjust R1 so that V_{OUT} = 2.982V @ 25°C.
4. Remove short across LM329B and adjust R2 so that V_{OUT} = 246 mV @ 25°C.
5. Remove short across thermocouple.

Figure 30. Fast Charger for Nickel-Cadmium Batteries

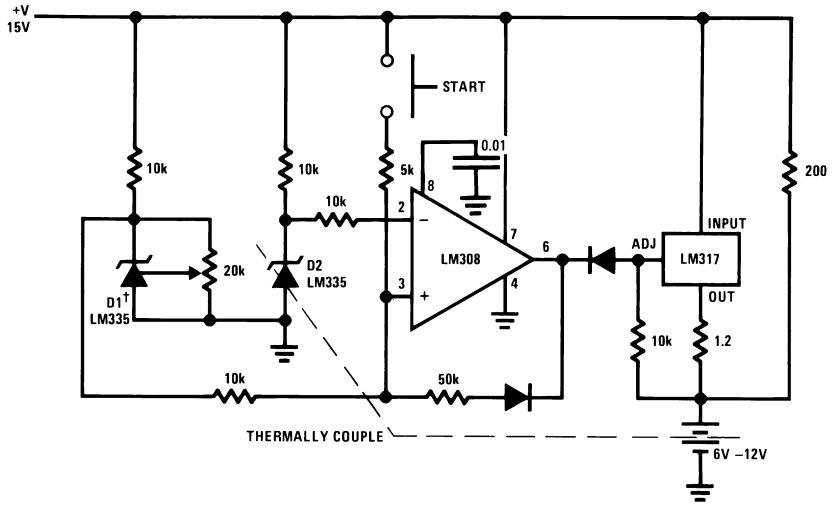

†Adjust D1 to 50 mV greater V_Z than D2.
Charge terminates on 5°C temperature rise. Couple D2 to battery.

Figure 31. Differential Temperature Sensor

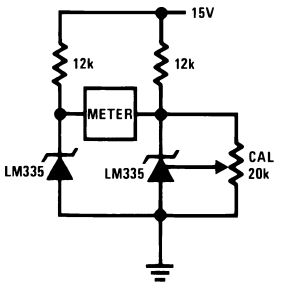

Figure 32. Differential Temperature Sensor

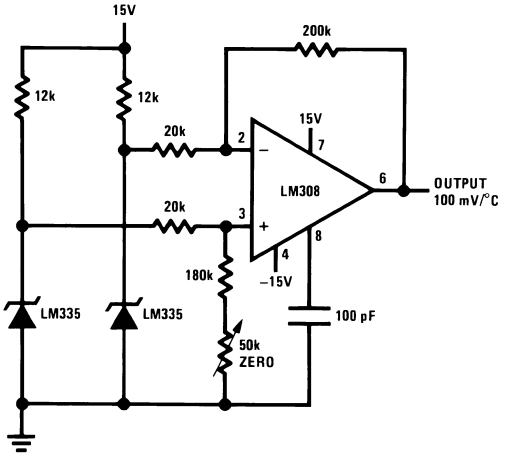

Figure 33. Variable Offset Thermometer‡

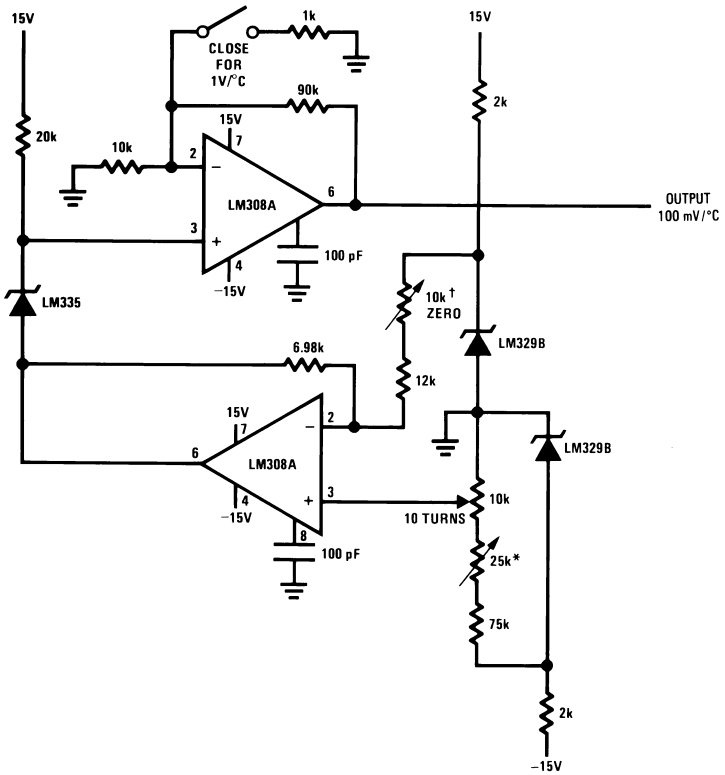

†Adjust for zero with sensor at 0°C and 10T pot set at 0°C
*Adjust for zero output with 10T pot set at 100°C and sensor at 100°C
‡Output reads difference between temperature and dial setting of 10T pot

Copyright © 1999–2013, Texas Instruments Incorporated

Figure 34. Ground Referred Centigrade Thermometer

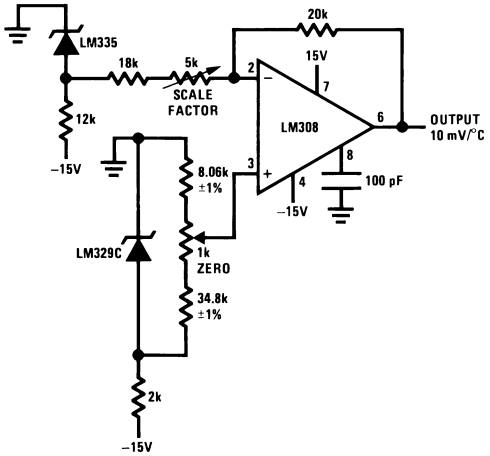

Figure 35. Air Flow Detector*

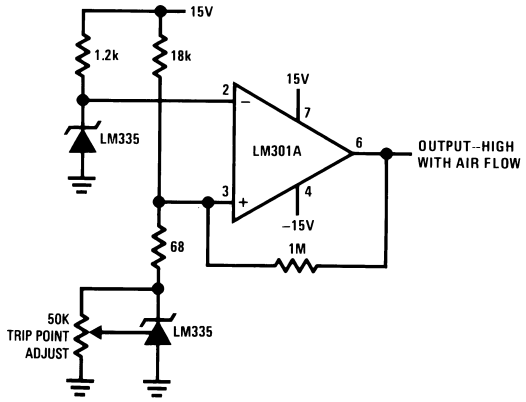

*Self heating is used to detect air flow

DEFINITION OF TERMS

Operating Output Voltage: The voltage appearing across the positive and negative terminals of the device at specified conditions of operating temperature and current.

Uncalibrated Temperature Error: The error between the operating output voltage at 10 mV/°K and case temperature at specified conditions of current and case temperature.

Calibrated Temperature Error: The error between operating output voltage and case temperature at 10 mV/°K over a temperature range at a specified operating current with the 25°C error adjusted to zero.

Copyright © 1999–2013, Texas Instruments Incorporated

REVISION HISTORY

Changes from Revision C (March 2013) to Revision D	Page
• Changed layout of National Data Sheet to TI format	13

Copyright © 1999–2013, Texas Instruments Incorporated

PACKAGING INFORMATION

Orderable Device	Status (1)	Package Type	Package Drawing	Pins	Package Qty	Eco Plan (2)	Lead/Ball Finish (6)	MSL Peak Temp (3)	Op Temp (°C)	Device Marking (4/5)	Samples
LM135AH	ACTIVE	TO	NDV	3	1000	TBD	Call TI	Call TI	-55 to 150	LM135AH	Samples
LM135AH/NOPB	ACTIVE	TO	NDV	3	1000	Green (RoHS & no Sb/Br)	Call TI | POST-PLATE	Level-1-NA-UNLIM	-55 to 150	LM135AH	Samples
LM135H	ACTIVE	TO	NDV	3	1000	TBD	Call TI	Call TI	-55 to 150	LM135H	Samples
LM135H/NOPB	ACTIVE	TO	NDV	3	1000	Green (RoHS & no Sb/Br)	Call TI | POST-PLATE	Level-1-NA-UNLIM	-55 to 150	LM135H	Samples
LM235AH	ACTIVE	TO	NDV	3	1000	TBD	Call TI	Call TI	-40 to 125	LM235AH	Samples
LM235AH/NOPB	ACTIVE	TO	NDV	3	1000	Green (RoHS & no Sb/Br)	Call TI | POST-PLATE	Level-1-NA-UNLIM	-40 to 125	LM235AH	Samples
LM235H	ACTIVE	TO	NDV	3	1000	TBD	Call TI	Call TI	-40 to 125	LM235H	Samples
LM235H/NOPB	ACTIVE	TO	NDV	3	1000	Green (RoHS & no Sb/Br)	Call TI | POST-PLATE	Level-1-NA-UNLIM	-40 to 125	LM235H	Samples
LM335AH	ACTIVE	TO	NDV	3	1000	TBD	Call TI	Call TI	-40 to 100	LM335AH	Samples
LM335AH/NOPB	ACTIVE	TO	NDV	3	1000	Green (RoHS & no Sb/Br)	POST-PLATE	Level-1-NA-UNLIM	-40 to 100	LM335AH	Samples
LM335AM	NRND	SOIC	D	8	95	TBD	Call TI	Call TI	-40 to 100	LM335 AM	
LM335AM/NOPB	ACTIVE	SOIC	D	8	95	Green (RoHS & no Sb/Br)	SN | CU SN	Level-1-260C-UNLIM	-40 to 100	LM335 AM	Samples
LM335AMX	NRND	SOIC	D	8	2500	TBD	Call TI	Call TI	-40 to 100	LM335 AM	
LM335AMX/NOPB	ACTIVE	SOIC	D	8	2500	Green (RoHS & no Sb/Br)	SN | CU SN	Level-1-260C-UNLIM	-40 to 100	LM335 AM	Samples
LM335AZ/LFT1	ACTIVE	TO-92	LP	3	2000	Green (RoHS & no Sb/Br)	SN | CU SN	N / A for Pkg Type		LM335 AZ	Samples
LM335AZ/NOPB	ACTIVE	TO-92	LP	3	1800	Green (RoHS & no Sb/Br)	SN | Call TI	N / A for Pkg Type	-40 to 100	LM335 AZ	Samples
LM335H	ACTIVE	TO	NDV	3	1000	TBD	Call TI	Call TI	-40 to 100	LM335H	Samples
LM335H/NOPB	ACTIVE	TO	NDV	3	1000	Green (RoHS & no Sb/Br)	POST-PLATE	Level-1-NA-UNLIM	-40 to 100	LM335H	Samples

Orderable Device	Status (1)	Package Type	Package Drawing	Pins	Package Qty	Eco Plan (2)	Lead/Ball Finish (6)	MSL Peak Temp (3)	Op Temp (°C)	Device Marking (4/5)	Samples
LM335M	NRND	SOIC	D	8	95	TBD	Call TI	Call TI	-40 to 100	LM335 M	
LM335M/NOPB	ACTIVE	SOIC	D	8	95	Green (RoHS & no Sb/Br)	SN | CU SN	Level-1-260C-UNLIM	-40 to 100	LM335 M	Samples
LM335MX	NRND	SOIC	D	8	2500	TBD	Call TI	Call TI	-40 to 100	LM335 M	
LM335MX/NOPB	ACTIVE	SOIC	D	8	2500	Green (RoHS & no Sb/Br)	SN | CU SN	Level-1-260C-UNLIM	-40 to 100	LM335 M	Samples
LM335Z/LFT7	ACTIVE	TO-92	LP	3	2000	Green (RoHS & no Sb/Br)	SNCU | CU SN	N / A for Pkg Type		LM335 Z	Samples
LM335Z/NOPB	ACTIVE	TO-92	LP	3	1800	Green (RoHS & no Sb/Br)	SN | Call TI	N / A for Pkg Type	-40 to 100	LM335 Z	Samples

(1) The marketing status values are defined as follows:
ACTIVE: Product device recommended for new designs.
LIFEBUY: TI has announced that the device will be discontinued, and a lifetime-buy period is in effect.
NRND: Not recommended for new designs. Device is in production to support existing customers, but TI does not recommend using this part in a new design.
PREVIEW: Device has been announced but is not in production. Samples may or may not be available.
OBSOLETE: TI has discontinued the production of the device.

(2) Eco Plan - The planned eco-friendly classification: Pb-Free (RoHS), Pb-Free (RoHS Exempt), or Green (RoHS & no Sb/Br) - please check http://www.ti.com/productcontent for the latest availability information and additional product content details.
TBD: The Pb-Free/Green conversion plan has not been defined.
Pb-Free (RoHS): TI's terms "Lead-Free" or "Pb-Free" mean semiconductor products that are compatible with the current RoHS requirements for all 6 substances, including the requirement that lead not exceed 0.1% by weight in homogeneous materials. Where designed to be soldered at high temperatures, TI Pb-Free products are suitable for use in specified lead-free processes.
Pb-Free (RoHS Exempt): This component has a RoHS exemption for either 1) lead-based flip-chip solder bumps used between the die and package, or 2) lead-based die adhesive used between the die and leadframe. The component is otherwise considered Pb-Free (RoHS compatible) as defined above.
Green (RoHS & no Sb/Br): TI defines "Green" to mean Pb-Free (RoHS compatible), and free of Bromine (Br) and Antimony (Sb) based flame retardants (Br or Sb do not exceed 0.1% by weight in homogeneous material)

(3) MSL, Peak Temp. - The Moisture Sensitivity Level rating according to the JEDEC industry standard classifications, and peak solder temperature.

(4) There may be additional marking, which relates to the logo, the lot trace code information, or the environmental category on the device.

(5) Multiple Device Markings will be inside parentheses. Only one Device Marking contained in parentheses and separated by a "~" will appear on a device. If a line is indented then it is a continuation of the previous line and the two combined represent the entire Device Marking for that device.

(6) Lead/Ball Finish - Orderable Devices may have multiple material finish options. Finish options are separated by a vertical ruled line. Lead/Ball Finish values may wrap to two lines if the finish value exceeds the maximum column width.

Important Information and Disclaimer: The information provided on this page represents TI's knowledge and belief as of the date that it is provided. TI bases its knowledge and belief on information provided by third parties, and makes no representation or warranty as to the accuracy of such information. Efforts are underway to better integrate information from third parties. TI has taken and continues to take reasonable steps to provide representative and accurate information but may not have conducted destructive testing or chemical analysis on incoming materials and chemicals. TI and TI suppliers consider certain information to be proprietary, and thus CAS numbers and other limited information may not be available for release.

In no event shall TI's liability arising out of such information exceed the total purchase price of the TI part(s) at issue in this document sold by TI to Customer on an annual basis.

TAPE AND REEL INFORMATION

REEL DIMENSIONS

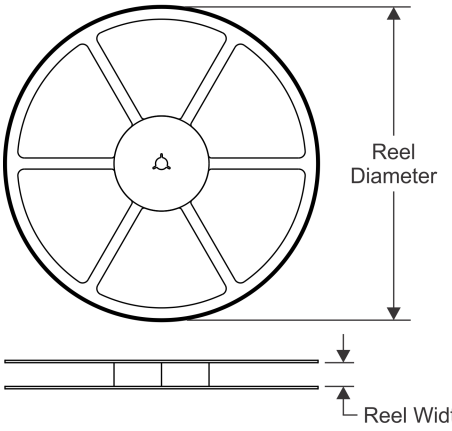

TAPE DIMENSIONS

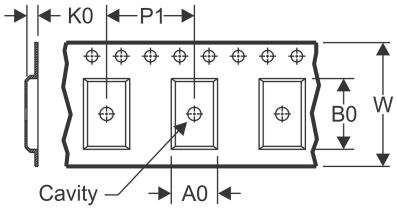

A0	Dimension designed to accommodate the component width
B0	Dimension designed to accommodate the component length
K0	Dimension designed to accommodate the component thickness
W	Overall width of the carrier tape
P1	Pitch between successive cavity centers

QUADRANT ASSIGNMENTS FOR PIN 1 ORIENTATION IN TAPE

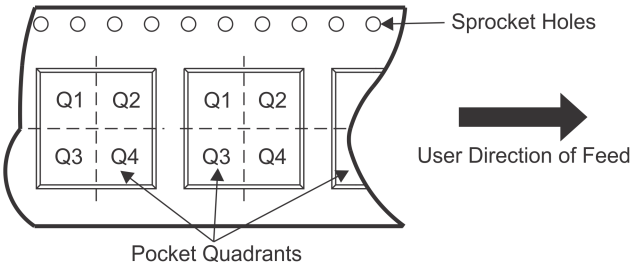

*All dimensions are nominal

Device	Package Type	Package Drawing	Pins	SPQ	Reel Diameter (mm)	Reel Width W1 (mm)	A0 (mm)	B0 (mm)	K0 (mm)	P1 (mm)	W (mm)	Pin1 Quadrant
LM335AMX	SOIC	D	8	2500	330.0	12.4	6.5	5.4	2.0	8.0	12.0	Q1
LM335AMX/NOPB	SOIC	D	8	2500	330.0	12.4	6.5	5.4	2.0	8.0	12.0	Q1
LM335MX	SOIC	D	8	2500	330.0	12.4	6.5	5.4	2.0	8.0	12.0	Q1
LM335MX/NOPB	SOIC	D	8	2500	330.0	12.4	6.5	5.4	2.0	8.0	12.0	Q1

TAPE AND REEL BOX DIMENSIONS

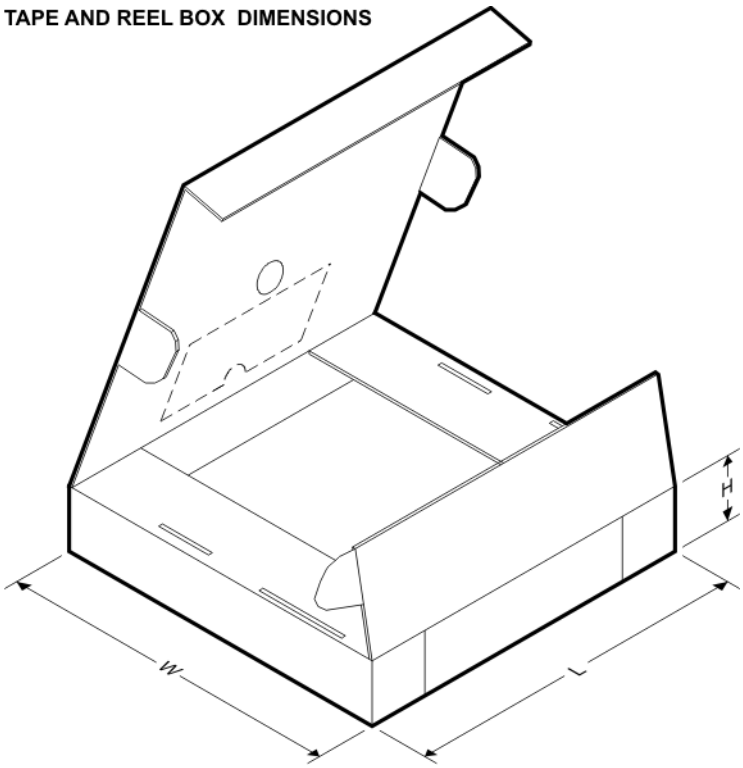

*All dimensions are nominal

Device	Package Type	Package Drawing	Pins	SPQ	Length (mm)	Width (mm)	Height (mm)
LM335AMX	SOIC	D	8	2500	367.0	367.0	35.0
LM335AMX/NOPB	SOIC	D	8	2500	367.0	367.0	35.0
LM335MX	SOIC	D	8	2500	367.0	367.0	35.0
LM335MX/NOPB	SOIC	D	8	2500	367.0	367.0	35.0

NDV0003H

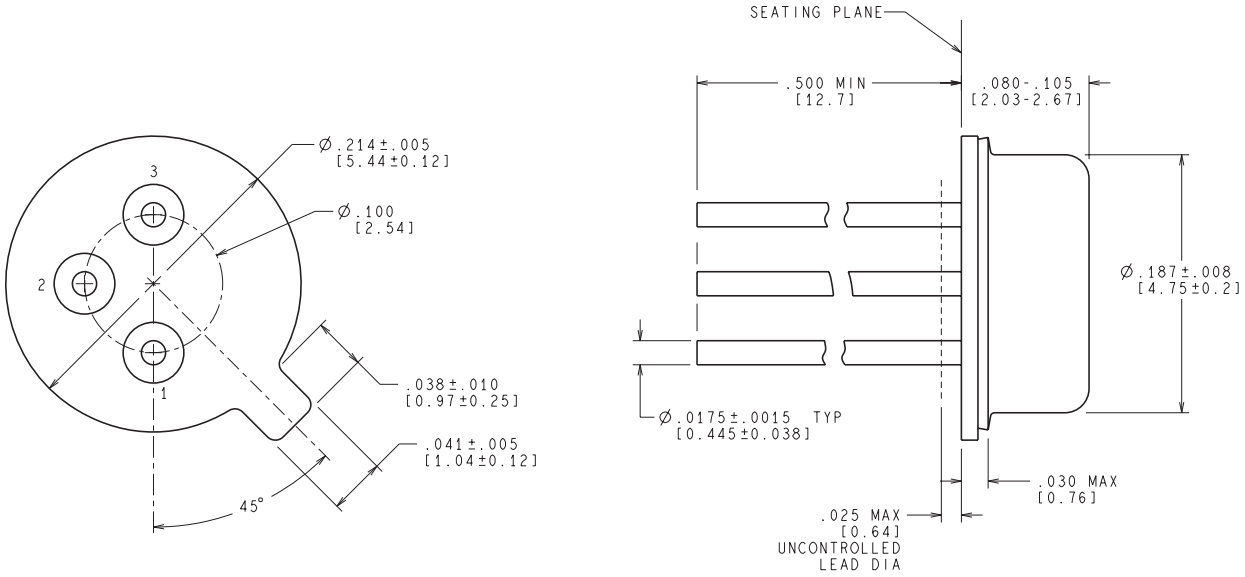

CONTROLLING DIMENSION IS INCH
VALUES IN [ ] ARE IN MILLIMETERS

H03H (Rev F)

D (R–PDSO–G8) PLASTIC SMALL OUTLINE

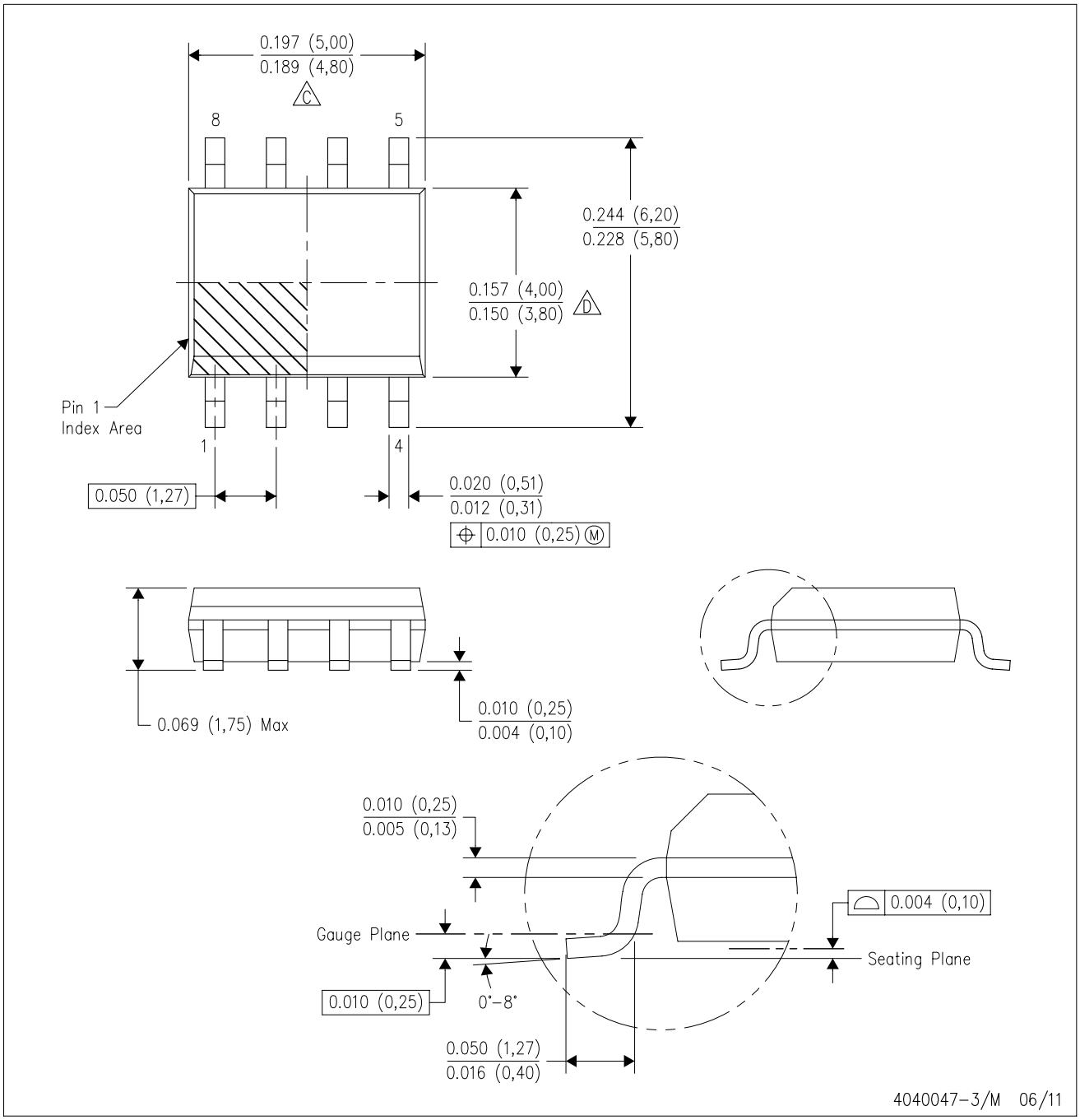

NOTES:
A. All linear dimensions are in inches (millimeters).
B. This drawing is subject to change without notice.
C. Body length does not include mold flash, protrusions, or gate burrs. Mold flash, protrusions, or gate burrs shall not exceed 0.006 (0,15) each side.
D. Body width does not include interlead flash. Interlead flash shall not exceed 0.017 (0,43) each side.
E. Reference JEDEC MS–012 variation AA.

LP (O–PBCY–W3) PLASTIC CYLINDRICAL PACKAGE

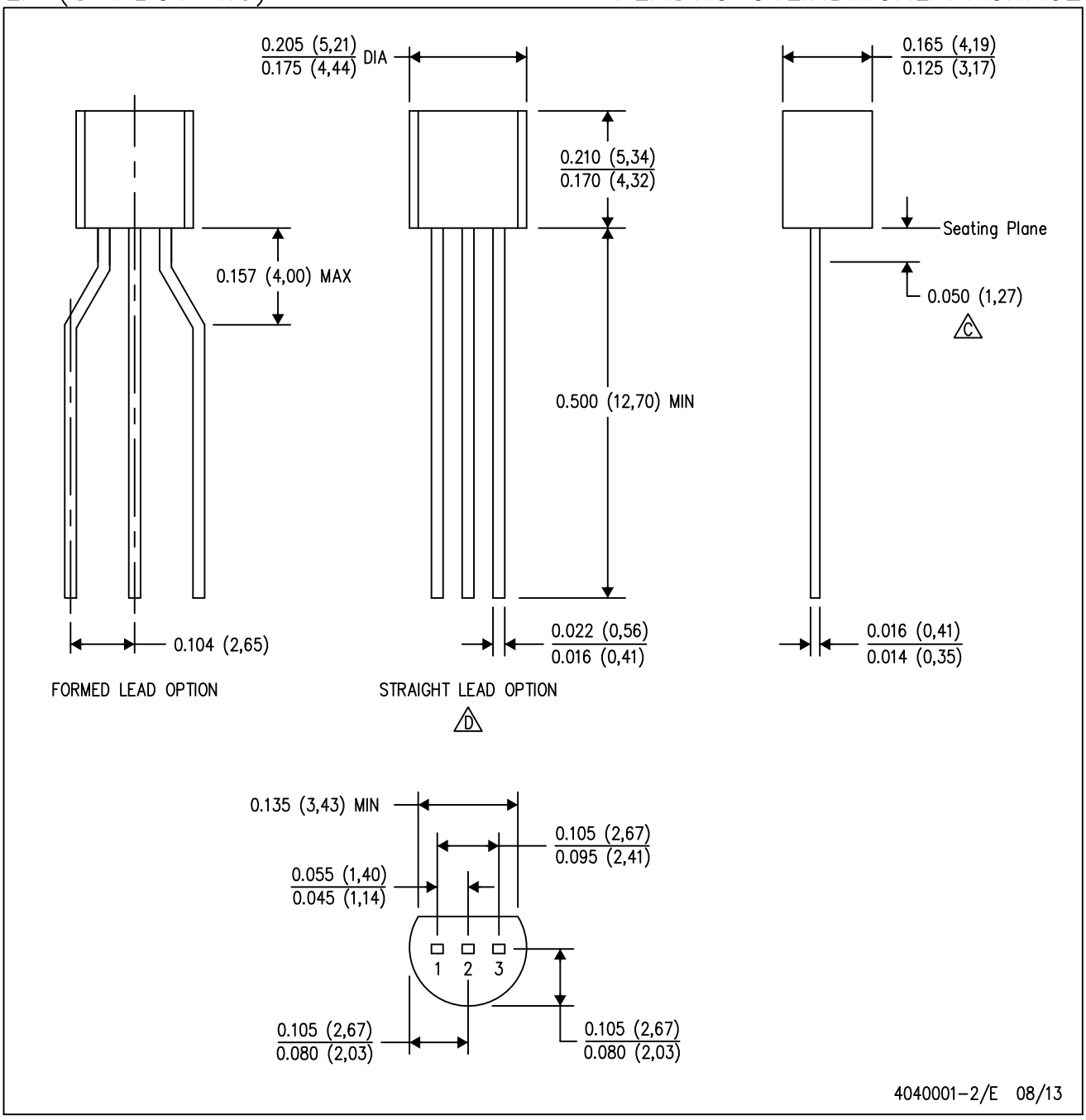

NOTES: A. All linear dimensions are in inches (millimeters).
B. This drawing is subject to change without notice.
C. Lead dimensions are not controlled within this area.
D. Falls within JEDEC TO–226 Variation AA (TO–226 replaces TO–92).
E. Shipping Method:
Straight lead option available in bulk pack only.
Formed lead option available in tape & reel or ammo pack.
Specific products can be offered in limited combinations of shipping mediums and lead options.
Consult product folder for more information on available options.

LP (O–PBCY–W3) PLASTIC CYLINDRICAL PACKAGE

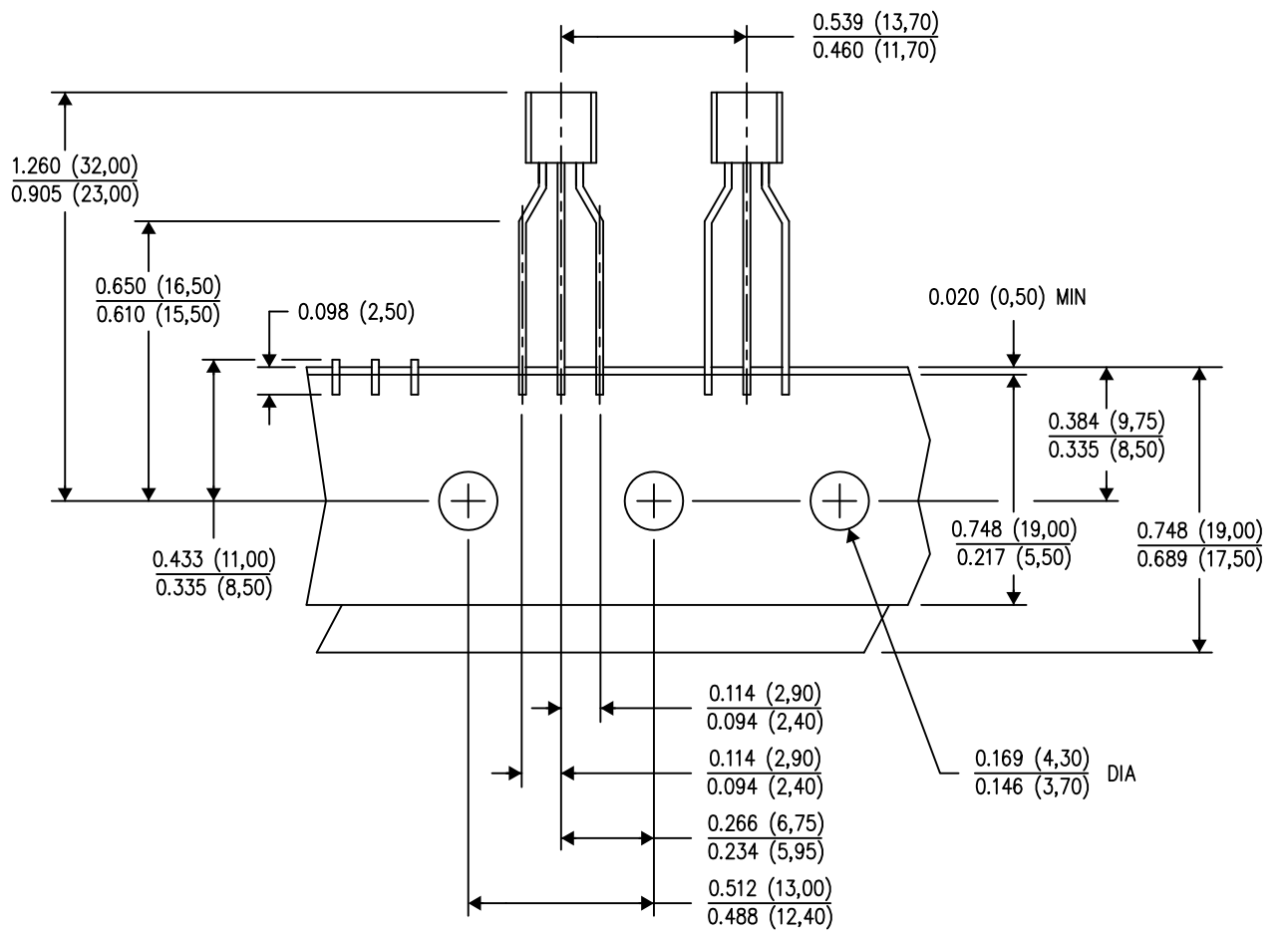

TAPE & REEL

4040001–3/E 08/13

NOTES:
A. All linear dimensions are in inches (millimeters).
B. This drawing is subject to change without notice.
C. Tape and Reel information for the Formed Lead Option package.

IMPORTANT NOTICE

Texas Instruments Incorporated and its subsidiaries (TI) reserve the right to make corrections, enhancements, improvements and other changes to its semiconductor products and services per JESD46, latest issue, and to discontinue any product or service per JESD48, latest issue. Buyers should obtain the latest relevant information before placing orders and should verify that such information is current and complete. All semiconductor products (also referred to herein as “components”) are sold subject to TI’s terms and conditions of sale supplied at the time of order acknowledgment.

TI warrants performance of its components to the specifications applicable at the time of sale, in accordance with the warranty in TI’s terms and conditions of sale of semiconductor products. Testing and other quality control techniques are used to the extent TI deems necessary to support this warranty. Except where mandated by applicable law, testing of all parameters of each component is not necessarily performed.

TI assumes no liability for applications assistance or the design of Buyers’ products. Buyers are responsible for their products and applications using TI components. To minimize the risks associated with Buyers’ products and applications, Buyers should provide adequate design and operating safeguards.

TI does not warrant or represent that any license, either express or implied, is granted under any patent right, copyright, mask work right, or other intellectual property right relating to any combination, machine, or process in which TI components or services are used. Information published by TI regarding third-party products or services does not constitute a license to use such products or services or a warranty or endorsement thereof. Use of such information may require a license from a third party under the patents or other intellectual property of the third party, or a license from TI under the patents or other intellectual property of TI.

Reproduction of significant portions of TI information in TI data books or data sheets is permissible only if reproduction is without alteration and is accompanied by all associated warranties, conditions, limitations, and notices. TI is not responsible or liable for such altered documentation. Information of third parties may be subject to additional restrictions.

Resale of TI components or services with statements different from or beyond the parameters stated by TI for that component or service voids all express and any implied warranties for the associated TI component or service and is an unfair and deceptive business practice. TI is not responsible or liable for any such statements.

Buyer acknowledges and agrees that it is solely responsible for compliance with all legal, regulatory and safety-related requirements concerning its products, and any use of TI components in its applications, notwithstanding any applications-related information or support that may be provided by TI. Buyer represents and agrees that it has all the necessary expertise to create and implement safeguards which anticipate dangerous consequences of failures, monitor failures and their consequences, lessen the likelihood of failures that might cause harm and take appropriate remedial actions. Buyer will fully indemnify TI and its representatives against any damages arising out of the use of any TI components in safety-critical applications.

In some cases, TI components may be promoted specifically to facilitate safety-related applications. With such components, TI’s goal is to help enable customers to design and create their own end-product solutions that meet applicable functional safety standards and requirements. Nonetheless, such components are subject to these terms.

No TI components are authorized for use in FDA Class III (or similar life-critical medical equipment) unless authorized officers of the parties have executed a special agreement specifically governing such use.

Only those TI components which TI has specifically designated as military grade or “enhanced plastic” are designed and intended for use in military/aerospace applications or environments. Buyer acknowledges and agrees that any military or aerospace use of TI components which have ***not*** been so designated is solely at the Buyer's risk, and that Buyer is solely responsible for compliance with all legal and regulatory requirements in connection with such use.

TI has specifically designated certain components as meeting ISO/TS16949 requirements, mainly for automotive use. In any case of use of non-designated products, TI will not be responsible for any failure to meet ISO/TS16949.

Products		**Applications**	
Audio	www.ti.com/audio	Automotive and Transportation	www.ti.com/automotive
Amplifiers	amplifier.ti.com	Communications and Telecom	www.ti.com/communications
Data Converters	dataconverter.ti.com	Computers and Peripherals	www.ti.com/computers
DLP® Products	www.dlp.com	Consumer Electronics	www.ti.com/consumer-apps
DSP	dsp.ti.com	Energy and Lighting	www.ti.com/energy
Clocks and Timers	www.ti.com/clocks	Industrial	www.ti.com/industrial
Interface	interface.ti.com	Medical	www.ti.com/medical
Logic	logic.ti.com	Security	www.ti.com/security
Power Mgmt	power.ti.com	Space, Avionics and Defense	www.ti.com/space-avionics-defense
Microcontrollers	microcontroller.ti.com	Video and Imaging	www.ti.com/video
RFID	www.ti-rfid.com		
OMAP Applications Processors	www.ti.com/omap	**TI E2E Community**	e2e.ti.com
Wireless Connectivity	www.ti.com/wirelessconnectivity		

Mailing Address: Texas Instruments, Post Office Box 655303, Dallas, Texas 75265
Copyright © 2014, Texas Instruments Incorporated