STM32F427xx STM32F429xx

32b Arm® Cortex®-M4 MCU+FPU, 225DMIPS, up to 2MB Flash/256+4KB RAM, USB OTG HS/FS, Ethernet, 17 TIMs, 3 ADCs, 20 com. interfaces, camera & LCD-TFT

Datasheet - production data

Features

- Core: Arm® 32-bit Cortex®-M4 CPU with FPU, Adaptive real-time accelerator (ART Accelerator™) allowing 0-wait state execution from Flash memory, frequency up to 180 MHz, MPU, 225 DMIPS/1.25 DMIPS/MHz (Dhrystone 2.1), and DSP instructions
- Memories
  - Up to 2 MB of Flash memory organized into two banks allowing read-while-write
  - Up to 256+4 KB of SRAM including 64-KB of CCM (core coupled memory) data RAM
  - Flexible external memory controller with up to 32-bit data bus: SRAM, PSRAM, SDRAM/LPSDR SDRAM, Compact Flash/NOR/NAND memories
- LCD parallel interface, 8080/6800 modes
- LCD-TFT controller with fully programmable resolution (total width up to 4096 pixels, total height up to 2048 lines and pixel clock up to 83 MHz)
- Chrom-ART Accelerator™ for enhanced graphic content creation (DMA2D)
- Clock, reset and supply management
  - 1.7 V to 3.6 V application supply and I/Os
  - POR, PDR, PVD and BOR
  - 4-to-26 MHz crystal oscillator
  - Internal 16 MHz factory-trimmed RC (1% accuracy)
  - 32 kHz oscillator for RTC with calibration
  - Internal 32 kHz RC with calibration
- Low power
  - Sleep, Stop and Standby modes
  - V_{BAT} supply for RTC, 20×32 bit backup registers + optional 4 KB backup SRAM
- 3×12-bit, 2.4 MSPS ADC: up to 24 channels and 7.2 MSPS in triple interleaved mode
- 2×12-bit D/A converters
- General-purpose DMA: 16-stream DMA controller with FIFOs and burst support
- Up to 17 timers: up to twelve 16-bit and two 32-bit timers up to 180 MHz, each with up to 4 IC/OC/PWM or pulse counter and quadrature (incremental) encoder input

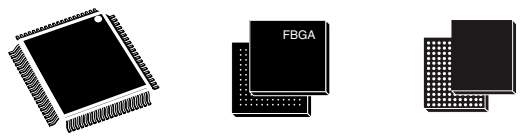

LQFP100 (14 × 14 mm)
LQFP144 (20 × 20 mm)
LQFP176 (24 × 24 mm)
LQFP208 (28 × 28 mm)

UFBGA176 (10 x 10 mm)
UFBGA169 (7 × 7 mm)
TFBGA216 (13 x 13 mm)

WLCSP143

- Debug mode
  - SWD & JTAG interfaces
  - Cortex-M4 Trace Macrocell™
- Up to 168 I/O ports with interrupt capability
  - Up to 164 fast I/Os up to 90 MHz
  - Up to 166 5 V-tolerant I/Os
- Up to 21 communication interfaces
  - Up to 3 × I^2C interfaces (SMBus/PMBus)
  - Up to 4 USARTs/4 UARTs (11.25 Mbit/s, ISO7816 interface, LIN, IrDA, modem control)
  - Up to 6 SPIs (45 Mbits/s), 2 with muxed full-duplex I^2S for audio class accuracy via internal audio PLL or external clock
  - 1 x SAI (serial audio interface)
  - 2 × CAN (2.0B Active) and SDIO interface
- Advanced connectivity
  - USB 2.0 full-speed device/host/OTG controller with on-chip PHY
  - USB 2.0 high-speed/full-speed device/host/OTG controller with dedicated DMA, on-chip full-speed PHY and ULPI
  - 10/100 Ethernet MAC with dedicated DMA: supports IEEE 1588v2 hardware, MII/RMII
- 8- to 14-bit parallel camera interface up to 54 Mbytes/s
- True random number generator
- CRC calculation unit
- RTC: subsecond accuracy, hardware calendar
- 96-bit unique ID

This is information on a product in full production. www.st.com

Table 1. Device summary

Reference	Part number
STM32F427xx	STM32F427VG, STM32F427ZG, STM32F427IG, STM32F427AG, STM32F427VI, STM32F427ZI, STM32F427II, STM32F427AI
STM32F429xx	STM32F429VG, STM32F429ZG, STM32F429IG, STM32F429BG, STM32F429NG, STM32F429AG, STM32F429VI, STM32F429ZI, STM32F429II,, STM32F429BI, STM32F429NI,STM32F429AI, STM32F429VE, STM32F429ZE, STM32F429IE, STM32F429BE, STM32F429NE

Contents

1 Introduction 13

2 Description 14

2.1 Full compatibility throughout the family 18

3 Functional overview 21

3.1 Arm® Cortex®-M4 with FPU and embedded Flash and SRAM 21

3.2 Adaptive real-time memory accelerator (ART Accelerator™) 21

3.3 Memory protection unit 21

3.4 Embedded Flash memory 22

3.5 CRC (cyclic redundancy check) calculation unit 22

3.6 Embedded SRAM 22

3.7 Multi-AHB bus matrix 22

3.8 DMA controller (DMA) 23

3.9 Flexible memory controller (FMC) 24

3.10 LCD-TFT controller (available only on STM32F429xx) 24

3.11 Chrom-ART Accelerator™ (DMA2D) 25

3.12 Nested vectored interrupt controller (NVIC) 25

3.13 External interrupt/event controller (EXTI) 25

3.14 Clocks and startup 25

3.15 Boot modes 26

3.16 Power supply schemes 26

3.17 Power supply supervisor 26

3.17.1 Internal reset ON 26

3.17.2 Internal reset OFF 27

3.18 Voltage regulator 28

3.18.1 Regulator ON 28

3.18.2 Regulator OFF 29

3.18.3 Regulator ON/OFF and internal reset ON/OFF availability 32

3.19 Real-time clock (RTC), backup SRAM and backup registers 32

3.20 Low-power modes 33

3.21 V_{BAT} operation 34

3.22 Timers and watchdogs 34
3.22.1 Advanced-control timers (TIM1, TIM8) 36
3.22.2 General-purpose timers (TIMx) 36
3.22.3 Basic timers TIM6 and TIM7 36
3.22.4 Independent watchdog 37
3.22.5 Window watchdog 37
3.22.6 SysTick timer 37
3.23 Inter-integrated circuit interface (I^2C) 37
3.24 Universal synchronous/asynchronous receiver transmitters (USART) . . 37
3.25 Serial peripheral interface (SPI) 38
3.26 Inter-integrated sound (I^2S) 39
3.27 Serial Audio interface (SAI1) 39
3.28 Audio PLL (PLLI2S) 39
3.29 Audio and LCD PLL(PLLSAI) 39
3.30 Secure digital input/output interface (SDIO) 40
3.31 Ethernet MAC interface with dedicated DMA and IEEE 1588 support . . . 40
3.32 Controller area network (bxCAN) 40
3.33 Universal serial bus on-the-go full-speed (OTG_FS) 41
3.34 Universal serial bus on-the-go high-speed (OTG_HS) 41
3.35 Digital camera interface (DCMI) 42
3.36 Random number generator (RNG) 42
3.37 General-purpose input/outputs (GPIOs) 42
3.38 Analog-to-digital converters (ADCs) 42
3.39 Temperature sensor 43
3.40 Digital-to-analog converter (DAC) 43
3.41 Serial wire JTAG debug port (SWJ-DP) 43
3.42 Embedded Trace Macrocell™ 44

4 Pinouts and pin description 45

5 Memory mapping 86

6 Electrical characteristics 91
6.1 Parameter conditions 91
6.1.1 Minimum and maximum values 91

6.1.2 Typical values . . . 91
6.1.3 Typical curves . . . 91
6.1.4 Loading capacitor . . . 91
6.1.5 Pin input voltage . . . 91
6.1.6 Power supply scheme . . . 92
6.1.7 Current consumption measurement . . . 93
6.2 Absolute maximum ratings . . . 93
6.3 Operating conditions . . . 95
6.3.1 General operating conditions . . . 95
6.3.2 VCAP1/VCAP2 external capacitor . . . 97
6.3.3 Operating conditions at power-up / power-down (regulator ON) . . . 98
6.3.4 Operating conditions at power-up / power-down (regulator OFF) . . . 98
6.3.5 Reset and power control block characteristics . . . 99
6.3.6 Over-drive switching characteristics . . . 100
6.3.7 Supply current characteristics . . . 101
6.3.8 Wakeup time from low-power modes . . . 117
6.3.9 External clock source characteristics . . . 118
6.3.10 Internal clock source characteristics . . . 122
6.3.11 PLL characteristics . . . 124
6.3.12 PLL spread spectrum clock generation (SSCG) characteristics . . . 127
6.3.13 Memory characteristics . . . 129
6.3.14 EMC characteristics . . . 131
6.3.15 Absolute maximum ratings (electrical sensitivity) . . . 133
6.3.16 I/O current injection characteristics . . . 134
6.3.17 I/O port characteristics . . . 135
6.3.18 NRST pin characteristics . . . 141
6.3.19 TIM timer characteristics . . . 142
6.3.20 Communications interfaces . . . 142
6.3.21 12-bit ADC characteristics . . . 157
6.3.22 Temperature sensor characteristics . . . 163
6.3.23 V_{BAT} monitoring characteristics . . . 164
6.3.24 Reference voltage . . . 164
6.3.25 DAC electrical characteristics . . . 165
6.3.26 FMC characteristics . . . 168
6.3.27 Camera interface (DCMI) timing specifications . . . 193
6.3.28 LCD-TFT controller (LTDC) characteristics . . . 194
6.3.29 SD/SDIO MMC card host interface (SDIO) characteristics . . . 196

6.3.30 RTC characteristics 197

7 Package information 198

7.1 LQFP100 package information 198

7.2 WLCSP143 package information 202

7.3 LQFP144 package information 205

7.4 LQFP176 package information 209

7.5 LQFP208 package information 213

7.6 UFBGA169 package information 217

7.7 UFBGA176+25 package information 220

7.8 TFBGA216 package information 223

7.9 Thermal characteristics 225

8 Part numbering 226

Appendix A Recommendations when using internal reset OFF 227

A.1 Operating conditions 227

Appendix B Application block diagrams 228

B.1 USB OTG full speed (FS) interface solutions 228

B.2 USB OTG high speed (HS) interface solutions 230

B.3 Ethernet interface solutions. 231

9 Revision history 233

List of tables

Table 1. Device summary . . . 2
Table 2. STM32F427xx and STM32F429xx features and peripheral counts . . . 16
Table 3. Voltage regulator configuration mode versus device operating mode . . . 29
Table 4. Regulator ON/OFF and internal reset ON/OFF availability . . . 32
Table 5. Voltage regulator modes in stop mode . . . 33
Table 6. Timer feature comparison . . . 35
Table 7. Comparison of I2C analog and digital filters . . . 37
Table 8. USART feature comparison . . . 38
Table 9. Legend/abbreviations used in the pinout table . . . 53
Table 10. STM32F427xx and STM32F429xx pin and ball definitions . . . 53
Table 11. FMC pin definition . . . 72
Table 12. STM32F427xx and STM32F429xx alternate function mapping . . . 75
Table 13. STM32F427xx and STM32F429xx register boundary addresses . . . 87
Table 14. Voltage characteristics . . . 93
Table 15. Current characteristics . . . 94
Table 16. Thermal characteristics . . . 94
Table 17. General operating conditions . . . 95
Table 18. Limitations depending on the operating power supply range . . . 97
Table 19. VCAP1/VCAP2 operating conditions . . . 97
Table 20. Operating conditions at power-up / power-down (regulator ON) . . . 98
Table 21. Operating conditions at power-up / power-down (regulator OFF) . . . 98
Table 22. reset and power control block characteristics . . . 99
Table 23. Over-drive switching characteristics . . . 100
Table 24. Typical and maximum current consumption in Run mode, code with data processing running from Flash memory (ART accelerator enabled except prefetch) or RAM . . . 102
Table 25. Typical and maximum current consumption in Run mode, code with data processing running from Flash memory (ART accelerator disabled) . . . 103
Table 26. Typical and maximum current consumption in Sleep mode . . . 104
Table 27. Typical and maximum current consumptions in Stop mode . . . 105
Table 28. Typical and maximum current consumptions in Standby mode . . . 106
Table 29. Typical and maximum current consumptions in V_{BAT} mode . . . 106
Table 30. Typical current consumption in Run mode, code with data processing running from Flash memory or RAM, regulator ON (ART accelerator enabled except prefetch), VDD=1.7 V . . . 108
Table 31. Typical current consumption in Run mode, code with data processing running from Flash memory, regulator OFF (ART accelerator enabled except prefetch) . . . 109
Table 32. Typical current consumption in Sleep mode, regulator ON, VDD=1.7 V . . . 110
Table 33. Tyical current consumption in Sleep mode, regulator OFF . . . 111
Table 34. Switching output I/O current consumption . . . 113
Table 35. Peripheral current consumption . . . 114
Table 36. Low-power mode wakeup timings . . . 117
Table 37. High-speed external user clock characteristics . . . 118
Table 38. Low-speed external user clock characteristics . . . 119
Table 39. HSE 4-26 MHz oscillator characteristics . . . 120
Table 40. LSE oscillator characteristics (f_{LSE} = 32.768 kHz) . . . 121
Table 41. HSI oscillator characteristics . . . 122
Table 42. LSI oscillator characteristics . . . 123
Table 43. Main PLL characteristics . . . 124

Table 44. PLLI2S (audio PLL) characteristics . . . 125
Table 45. PLLISAI (audio and LCD-TFT PLL) characteristics . . . 126
Table 46. SSCG parameters constraint . . . 127
Table 47. Flash memory characteristics . . . 129
Table 48. Flash memory programming . . . 129
Table 49. Flash memory programming with V_{PP} . . . 130
Table 50. Flash memory endurance and data retention . . . 131
Table 51. EMS characteristics . . . 131
Table 52. EMI characteristics . . . 132
Table 53. ESD absolute maximum ratings . . . 133
Table 54. Electrical sensitivities . . . 133
Table 55. I/O current injection susceptibility . . . 134
Table 56. I/O static characteristics . . . 135
Table 57. Output voltage characteristics . . . 138
Table 58. I/O AC characteristics . . . 139
Table 59. NRST pin characteristics . . . 141
Table 60. TIMx characteristics . . . 142
Table 61. I2C analog filter characteristics . . . 143
Table 62. SPI dynamic characteristics . . . 143
Table 63. I^2S dynamic characteristics . . . 146
Table 64. SAI characteristics . . . 148
Table 65. USB OTG full speed startup time . . . 150
Table 66. USB OTG full speed DC electrical characteristics . . . 150
Table 67. USB OTG full speed electrical characteristics . . . 151
Table 68. USB HS DC electrical characteristics . . . 151
Table 69. USB HS clock timing parameters . . . 152
Table 70. Dynamic characteristics: USB ULPI . . . 153
Table 71. Dynamics characteristics: Ethernet MAC signals for SMI . . . 154
Table 72. Dynamics characteristics: Ethernet MAC signals for RMII . . . 155
Table 73. Dynamics characteristics: Ethernet MAC signals for MII . . . 156
Table 74. ADC characteristics . . . 157
Table 75. ADC static accuracy at f_{ADC} = 18 MHz . . . 158
Table 76. ADC static accuracy at f_{ADC} = 30 MHz . . . 159
Table 77. ADC static accuracy at f_{ADC} = 36 MHz . . . 159
Table 78. ADC dynamic accuracy at f_{ADC} = 18 MHz - limited test conditions . . . 159
Table 79. ADC dynamic accuracy at f_{ADC} = 36 MHz - limited test conditions . . . 159
Table 80. Temperature sensor characteristics . . . 163
Table 81. Temperature sensor calibration values . . . 163
Table 82. V_{BAT} monitoring characteristics . . . 164
Table 83. internal reference voltage . . . 164
Table 84. Internal reference voltage calibration values . . . 164
Table 85. DAC characteristics . . . 165
Table 86. Asynchronous non-multiplexed SRAM/PSRAM/NOR - read timings . . . 169
Table 87. Asynchronous non-multiplexed SRAM/PSRAM/NOR read - NWAIT timings . . . 170
Table 88. Asynchronous non-multiplexed SRAM/PSRAM/NOR write timings . . . 171
Table 89. Asynchronous non-multiplexed SRAM/PSRAM/NOR write - NWAIT timings . . . 172
Table 90. Asynchronous multiplexed PSRAM/NOR read timings . . . 173
Table 91. Asynchronous multiplexed PSRAM/NOR read-NWAIT timings . . . 173
Table 92. Asynchronous multiplexed PSRAM/NOR write timings . . . 174

Table 93. Asynchronous multiplexed PSRAM/NOR write-NWAIT timings 175
Table 94. Synchronous multiplexed NOR/PSRAM read timings 176
Table 95. Synchronous multiplexed PSRAM write timings 178
Table 96. Synchronous non-multiplexed NOR/PSRAM read timings 179
Table 97. Synchronous non-multiplexed PSRAM write timings 180
Table 98. Switching characteristics for PC Card/CF read and write cycles in attribute/common space 185
Table 99. Switching characteristics for PC Card/CF read and write cycles in I/O space 186
Table 100. Switching characteristics for NAND Flash read cycles 188
Table 101. Switching characteristics for NAND Flash write cycles 189
Table 102. SDRAM read timings 190
Table 103. LPSDR SDRAM read timings 190
Table 104. SDRAM write timings 192
Table 105. LPSDR SDRAM write timings 192
Table 106. DCMI characteristics 193
Table 107. LTDC characteristics 194
Table 108. Dynamic characteristics: SD / MMC characteristics 197
Table 109. RTC characteristics 197
Table 110. LQPF100 100-pin, 14 x 14 mm low-profile quad flat package mechanical data 199
Table 111. WLCSP143 - 143-ball, 4.521x 5.547 mm, 0.4 mm pitch wafer level chip scale package mechanical data 203
Table 112. WLCSP143 recommended PCB design rules (0.4 mm pitch) 204
Table 113. LQFP144 - 144-pin, 20 x 20 mm low-profile quad flat package mechanical data 206
Table 114. LQFP176 - 176-pin, 24 x 24 mm low-profile quad flat package mechanical data 209
Table 115. LQFP208 - 208-pin, 28 x 28 mm low-profile quad flat package mechanical data 214
Table 116. UFBGA169 - 169-ball 7 x 7 mm 0.50 mm pitch, ultra fine pitch ball grid array package mechanical data 217
Table 117. UFBGA169 recommended PCB design rules (0.5 mm pitch BGA) 218
Table 118. UFBGA176+25 - ball, 10 x 10 mm, 0.65 mm pitch, ultra fine pitch ball grid array package mechanical data 220
Table 119. UFBGA176+25 recommended PCB design rules (0.65 mm pitch BGA) 221
Table 120. TFBGA216 - 216 ball 13 × 13 mm 0.8 mm pitch thin fine pitch ball grid array package mechanical data 223
Table 121. Package thermal characteristics 225
Table 122. Ordering information scheme 226
Table 123. Limitations depending on the operating power supply range 227
Table 124. Document revision history 233

List of figures

Figure 1. Compatible board design STM32F10xx/STM32F2xx/STM32F4xx for LQFP100 package . . . 18
Figure 2. Compatible board design between STM32F10xx/STM32F2xx/STM32F4xx for LQFP144 package . . . 19
Figure 3. Compatible board design between STM32F2xx and STM32F4xx for LQFP176 and UFBGA176 packages . . . 19
Figure 4. STM32F427xx and STM32F429xx block diagram . . . 20
Figure 5. STM32F427xx and STM32F429xx Multi-AHB matrix . . . 23
Figure 6. Power supply supervisor interconnection with internal reset OFF . . . 27
Figure 7. PDR_ON control with internal reset OFF . . . 28
Figure 8. Regulator OFF . . . 30
Figure 9. Startup in regulator OFF: slow V_{DD} slope - power-down reset risen after V_{CAP_1}/V_{CAP_2} stabilization . . . 31
Figure 10. Startup in regulator OFF mode: fast V_{DD} slope - power-down reset risen before V_{CAP_1}/V_{CAP_2} stabilization . . . 31
Figure 11. STM32F42x LQFP100 pinout . . . 45
Figure 12. STM32F42x WLCSP143 ballout . . . 46
Figure 13. STM32F42x LQFP144 pinout . . . 47
Figure 14. STM32F42x LQFP176 pinout . . . 48
Figure 15. STM32F42x LQFP208 pinout . . . 49
Figure 16. STM32F42x UFBGA169 ballout . . . 50
Figure 17. STM32F42x UFBGA176 ballout . . . 51
Figure 18. STM32F42x TFBGA216 ballout . . . 52
Figure 19. Memory map . . . 86
Figure 20. Pin loading conditions . . . 91
Figure 21. Pin input voltage . . . 91
Figure 22. Power supply scheme . . . 92
Figure 23. Current consumption measurement scheme . . . 93
Figure 24. External capacitor C_{EXT} . . . 97
Figure 25. Typical V_{BAT} current consumption (LSE and RTC ON/backup RAM OFF) . . . 107
Figure 26. Typical V_{BAT} current consumption (LSE and RTC ON/backup RAM ON) . . . 107
Figure 27. High-speed external clock source AC timing diagram . . . 119
Figure 28. Low-speed external clock source AC timing diagram . . . 120
Figure 29. Typical application with an 8 MHz crystal . . . 121
Figure 30. Typical application with a 32.768 kHz crystal . . . 122
Figure 31. ACCHSI accuracy versus temperature . . . 123
Figure 32. ACC_{LSI} versus temperature . . . 124
Figure 33. PLL output clock waveforms in center spread mode . . . 128
Figure 34. PLL output clock waveforms in down spread mode . . . 128
Figure 35. FT I/O input characteristics . . . 137
Figure 36. I/O AC characteristics definition . . . 140
Figure 37. Recommended NRST pin protection . . . 141
Figure 38. SPI timing diagram - slave mode and CPHA = 0 . . . 144
Figure 39. SPI timing diagram - slave mode and CPHA = 1 . . . 145
Figure 40. SPI timing diagram - master mode . . . 145
Figure 41. I^2S slave timing diagram (Philips protocol)(1) . . . 147
Figure 42. I^2S master timing diagram (Philips protocol)(1) . . . 147
Figure 43. SAI master timing waveforms . . . 149

Figure 44. SAI slave timing waveforms . . . 149
Figure 45. USB OTG full speed timings: definition of data signal rise and fall time . . . 151
Figure 46. ULPI timing diagram . . . 152
Figure 47. Ethernet SMI timing diagram . . . 154
Figure 48. Ethernet RMII timing diagram . . . 155
Figure 49. Ethernet MII timing diagram . . . 156
Figure 50. ADC accuracy characteristics . . . 160
Figure 51. Typical connection diagram using the ADC . . . 161
Figure 52. Power supply and reference decoupling (V_{REF+} not connected to V_{DDA}) . . . 162
Figure 53. Power supply and reference decoupling (V_{REF+} connected to V_{DDA}) . . . 163
Figure 54. 12-bit buffered /non-buffered DAC . . . 167
Figure 55. Asynchronous non-multiplexed SRAM/PSRAM/NOR read waveforms . . . 169
Figure 56. Asynchronous non-multiplexed SRAM/PSRAM/NOR write waveforms . . . 171
Figure 57. Asynchronous multiplexed PSRAM/NOR read waveforms . . . 172
Figure 58. Asynchronous multiplexed PSRAM/NOR write waveforms . . . 174
Figure 59. Synchronous multiplexed NOR/PSRAM read timings . . . 176
Figure 60. Synchronous multiplexed PSRAM write timings . . . 177
Figure 61. Synchronous non-multiplexed NOR/PSRAM read timings . . . 179
Figure 62. Synchronous non-multiplexed PSRAM write timings . . . 180
Figure 63. PC Card/CompactFlash controller waveforms for common memory read access . . . 182
Figure 64. PC Card/CompactFlash controller waveforms for common memory write access . . . 182
Figure 65. PC Card/CompactFlash controller waveforms for attribute memory read access . . . 183
Figure 66. PC Card/CompactFlash controller waveforms for attribute memory write access . . . 184
Figure 67. PC Card/CompactFlash controller waveforms for I/O space read access . . . 184
Figure 68. PC Card/CompactFlash controller waveforms for I/O space write access . . . 185
Figure 69. NAND controller waveforms for read access . . . 187
Figure 70. NAND controller waveforms for write access . . . 187
Figure 71. NAND controller waveforms for common memory read access . . . 188
Figure 72. NAND controller waveforms for common memory write access . . . 188
Figure 73. SDRAM read access waveforms (CL = 1) . . . 189
Figure 74. SDRAM write access waveforms . . . 191
Figure 75. DCMI timing diagram . . . 193
Figure 76. LCD-TFT horizontal timing diagram . . . 195
Figure 77. LCD-TFT vertical timing diagram . . . 195
Figure 78. SDIO high-speed mode . . . 196
Figure 79. SD default mode . . . 196
Figure 80. LQFP100 -100-pin, 14 x 14 mm low-profile quad flat package outline . . . 198
Figure 81. LQPF100 - 100-pin, 14 x 14 mm low-profile quad flat recommended footprint . . . 200
Figure 82. LQFP100 marking example (package top view) . . . 201
Figure 83. WLCSP143 - 143-ball, 4.521x 5.547 mm, 0.4 mm pitch wafer level chip scale package outline . . . 202
Figure 84. WLCSP143 - 143-ball, 4.521x 5.547 mm, 0.4 mm pitch wafer level chip scale recommended footprint . . . 203
Figure 85. WLCSP143 marking example (package top view) . . . 204
Figure 86. LQFP144-144-pin, 20 x 20 mm low-profile quad flat package outline . . . 205
Figure 87. LQPF144- 144-pin,20 x 20 mm low-profile quad flat package recommended footprint . . . 207
Figure 88. LQFP144 marking example (package top view) . . . 208
Figure 89. LQFP176 - 176-pin, 24 x 24 mm low-profile quad flat package outline . . . 209

Figure 90. LQFP176 - 176-pin, 24 x 24 mm low profile quad flat recommended footprint. 211
Figure 91. LQFP176 marking (package top view) 212
Figure 92. LQFP208 - 208-pin, 28 x 28 mm low-profile quad flat package outline 213
Figure 93. LQFP208 - 208-pin, 28 x 28 mm low-profile quad flat package recommended footprint. 215
Figure 94. LQFP208 marking example (package top view) 216
Figure 95. UFBGA169 - 169-ball 7 x 7 mm 0.50 mm pitch, ultra fine pitch ball grid array package outline. 217
Figure 96. UFBGA169 - 169-ball, 7 x 7 mm, 0.50 mm pitch, ultra fine pitch ball grid array recommended footprint 218
Figure 97. UFBGA169 marking example (package top view) 219
Figure 98. UFBGA176+25 - ball 10 x 10 mm, 0.65 mm pitch ultra thin fine pitch ball grid array package outline 220
Figure 99. UFBGA176+25-ball, 10 x 10 mm, 0.65 mm pitch, ultra fine pitch ball grid array package recommended footprint 221
Figure 100. UFBGA176+25 marking example (package top view) 222
Figure 101. TFBGA216 - 216 ball 13 × 13 mm 0.8 mm pitch thin fine pitch ball grid array package outline 223
Figure 102. TFBGA176 marking example (package top view) 224
Figure 103. USB controller configured as peripheral-only and used in Full speed mode 228
Figure 104. USB controller configured as host-only and used in full speed mode. 228
Figure 105. USB controller configured in dual mode and used in full speed mode 229
Figure 106. USB controller configured as peripheral, host, or dual-mode and used in high speed mode. 230
Figure 107. MII mode using a 25 MHz crystal 231
Figure 108. RMII with a 50 MHz oscillator 231
Figure 109. RMII with a 25 MHz crystal and PHY with PLL. 232

1 Introduction

This datasheet provides the description of the STM32F427xx and STM32F429xx line of microcontrollers. For more details on the whole STMicroelectronics STM32 family, please refer to *Section 2.1: Full compatibility throughout the family*.

The STM32F427xx and STM32F429xx datasheet should be read in conjunction with the STM32F4xx reference manual.

For information on the Cortex®-M4 core, please refer to the Cortex®-M4 programming manual (PM0214), available from *www.st.com*.

2 Description

The STM32F427xx and STM32F429xx devices are based on the high-performance Arm® Cortex®-M4 32-bit RISC core operating at a frequency of up to 180 MHz. The Cortex-M4 core features a Floating point unit (FPU) single precision which supports all Arm® single-precision data-processing instructions and data types. It also implements a full set of DSP instructions and a memory protection unit (MPU) which enhances application security.

The STM32F427xx and STM32F429xx devices incorporate high-speed embedded memories (Flash memory up to 2 Mbyte, up to 256 Kbytes of SRAM), up to 4 Kbytes of backup SRAM, and an extensive range of enhanced I/Os and peripherals connected to two APB buses, two AHB buses and a 32-bit multi-AHB bus matrix.

All devices offer three 12-bit ADCs, two DACs, a low-power RTC, twelve general-purpose 16-bit timers including two PWM timers for motor control, two general-purpose 32-bit timers. They also feature standard and advanced communication interfaces.

- Up to three I^2Cs
- Six SPIs, two I^2Ss full duplex. To achieve audio class accuracy, the I^2S peripherals can be clocked via a dedicated internal audio PLL or via an external clock to allow synchronization.
- Four USARTs plus four UARTs
- An USB OTG full-speed and a USB OTG high-speed with full-speed capability (with the ULPI),
- Two CANs
- One SAI serial audio interface
- An SDIO/MMC interface
- Ethernet and camera interface
- LCD-TFT display controller
- Chrom-ART Accelerator™.

Advanced peripherals include an SDIO, a flexible memory control (FMC) interface, a camera interface for CMOS sensors. Refer to *Table 2: STM32F427xx and STM32F429xx features and peripheral counts* for the list of peripherals available on each part number.

The STM32F427xx and STM32F429xx devices operates in the –40 to +105 °C temperature range from a 1.7 to 3.6 V power supply.

The supply voltage can drop to 1.7 V with the use of an external power supply supervisor (refer to *Section 3.17.2: Internal reset OFF*). A comprehensive set of power-saving mode allows the design of low-power applications.

The STM32F427xx and STM32F429xx devices offer devices in 8 packages ranging from 100 pins to 216 pins. The set of included peripherals changes with the device chosen.

These features make the STM32F427xx and STM32F429xx microcontrollers suitable for a wide range of applications:

- Motor drive and application control
- Medical equipment
- Industrial applications: PLC, inverters, circuit breakers
- Printers, and scanners
- Alarm systems, video intercom, and HVAC
- Home audio appliances

Figure 4 shows the general block diagram of the device family.

Table 2. STM32F427xx and STM32F429xx features and peripheral counts

Peripherals		STM32F427 Vx		STM32F429Vx			STM32F427 Zx		STM32F429Zx			STM32F427 Ax		STM32F429 Ax		STM32F427 Ix		STM32F429Ix			STM32F429Bx			STM32F429Nx		
Flash memory in Kbytes		1024	2048	512	1024	2048	1024	2048	512	1024	2048	1024	2048	1024	2048	1024	2048	512	1024	2048	512	1024	2048	512	1024	2048
SRAM in Kbytes	System	256(112+16+64+64)																								
	Backup	4																								
FMC memory controller		Yes(1)																								
Ethernet		Yes																								
Timers	General-purpose	10																								
	Advanced -control	2																								
	Basic	2																								
Random number generator		Yes																								
Communication interfaces	SPI / I^2S	4/2 (full duplex)(2)					6/2 (full duplex)(2)																			
	I^2C	3																								
	USART/ UART	4/4																								
	USB OTG FS	Yes																								
	USB OTG HS	Yes																								
	CAN	2																								
	SAI	1																								
	SDIO	Yes																								
Camera interface		Yes																								
LCD-TFT (STM32F429xx only)		No		Yes			No		Yes			No		Yes		No		Yes								
Chrom-ART Accelerator™		Yes																								
GPIOs		82					114					130				140					168					
12-bit ADC Number of channels		3																								
		16					24																			

Table 2. STM32F427xx and STM32F429xx features and peripheral counts (continued)

Peripherals	STM32F427 Vx	STM32F429Vx	STM32F427 Zx	STM32F429Zx	STM32F427 Ax	STM32F429 Ax	STM32F427 Ix	STM32F429Ix	STM32F429Bx	STM32F429Nx
12-bit DAC Number of channels	Yes 2									
Maximum CPU frequency	180 MHz									
Operating voltage	1.8 to 3.6 V(3)									
Operating temperatures	Ambient temperatures: –40 to +85 °C /–40 to +105 °C									
	Junction temperature: –40 to + 125 °C									
Packages	LQFP100		WLCSP143 LQFP144		UFBGA169		UFBGA176 LQFP176		LQFP208	TFBGA216

1. For the LQFP100 package, only FMC Bank1 or Bank2 are available. Bank1 can only support a multiplexed NOR/PSRAM memory using the NE1 Chip Select. Bank2 can only support a 16- or 8-bit NAND Flash memory using the NCE2 Chip Select. The interrupt line cannot be used since Port G is not available in this package. For UFBGA169 package, only SDRAM, NAND and multiplexed static memories are supported.
2. The SPI2 and SPI3 interfaces give the flexibility to work in an exclusive way in either the SPI mode or the I2S audio mode.
3. V_{DD}/V_{DDA} minimum value of 1.7 V is obtained when the device operates in reduced temperature range, and with the use of an external power supply supervisor (refer to *Section 3.17.2: Internal reset OFF*).

2.1 Full compatibility throughout the family

The STM32F427xx and STM32F429xx devices are part of the STM32F4 family. They are fully pin-to-pin, software and feature compatible with the STM32F2xx devices, allowing the user to try different memory densities, peripherals, and performances (FPU, higher frequency) for a greater degree of freedom during the development cycle.

The STM32F427xx and STM32F429xx devices maintain a close compatibility with the whole STM32F10xx family. All functional pins are pin-to-pin compatible. The STM32F427xx and STM32F429xx, however, are not drop-in replacements for the STM32F10xx devices: the two families do not have the same power scheme, and so their power pins are different. Nonetheless, transition from the STM32F10xx to the STM32F42x family remains simple as only a few pins are impacted.

Figure 1, *Figure 2*, and *Figure 3*, give compatible board designs between the STM32F4xx, STM32F2xx, and STM32F10xx families.

Figure 1. Compatible board design STM32F10xx/STM32F2xx/STM32F4xx for LQFP100 package

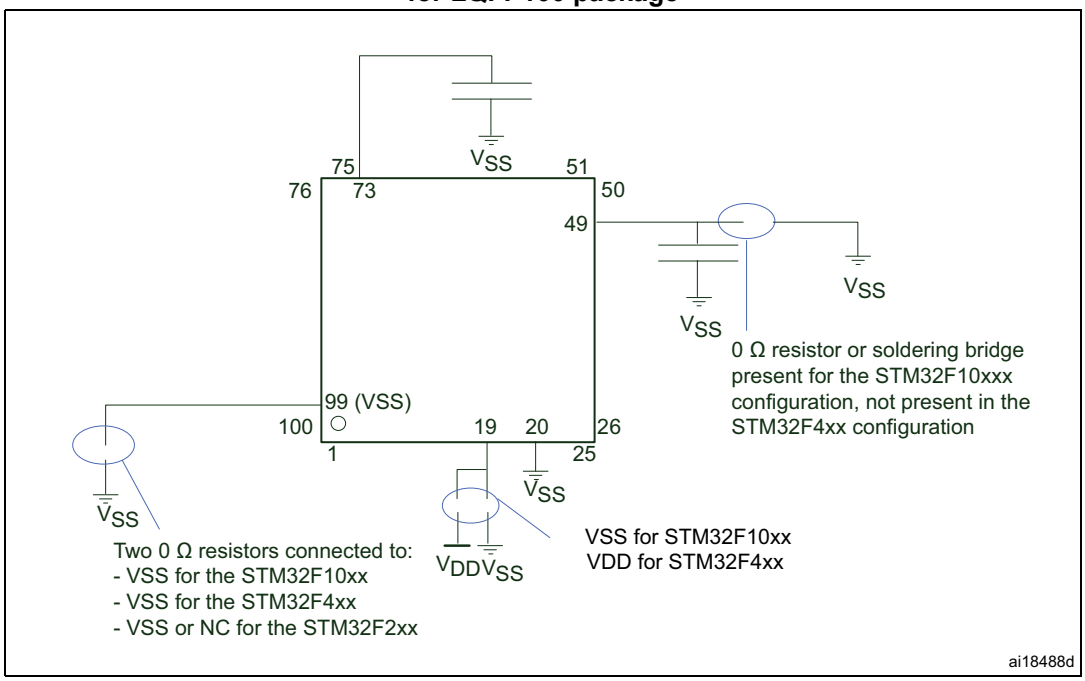

Figure 2. Compatible board design between STM32F10xx/STM32F2xx/STM32F4xx for LQFP144 package

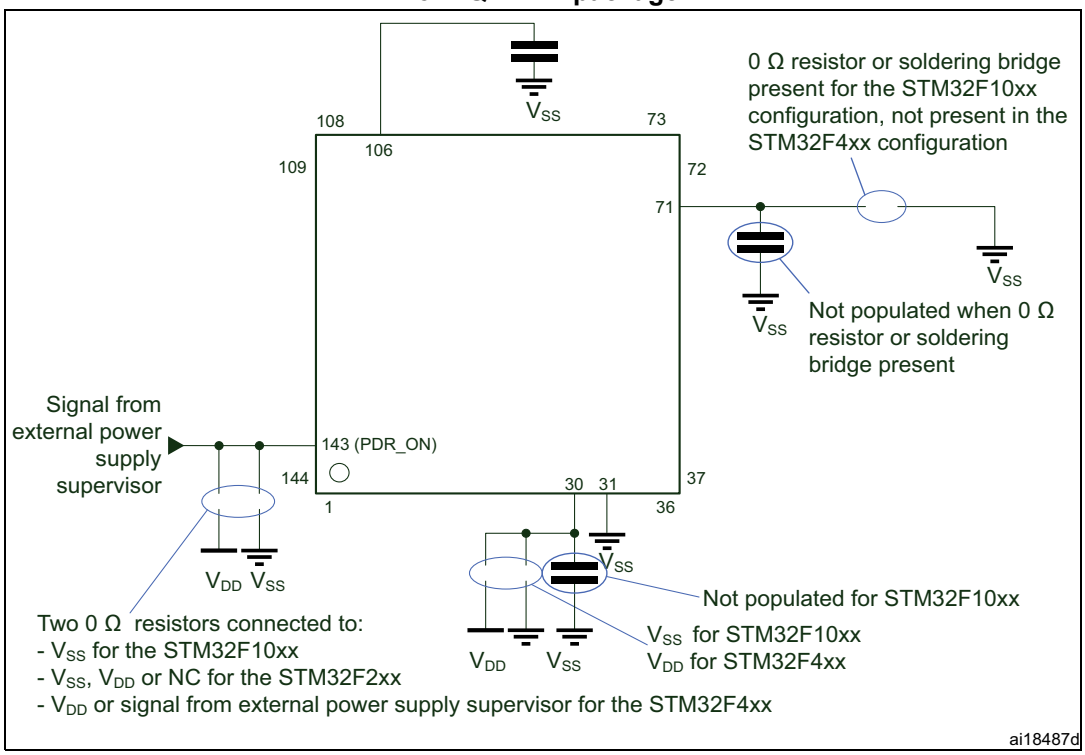

Figure 3. Compatible board design between STM32F2xx and STM32F4xx for LQFP176 and UFBGA176 packages

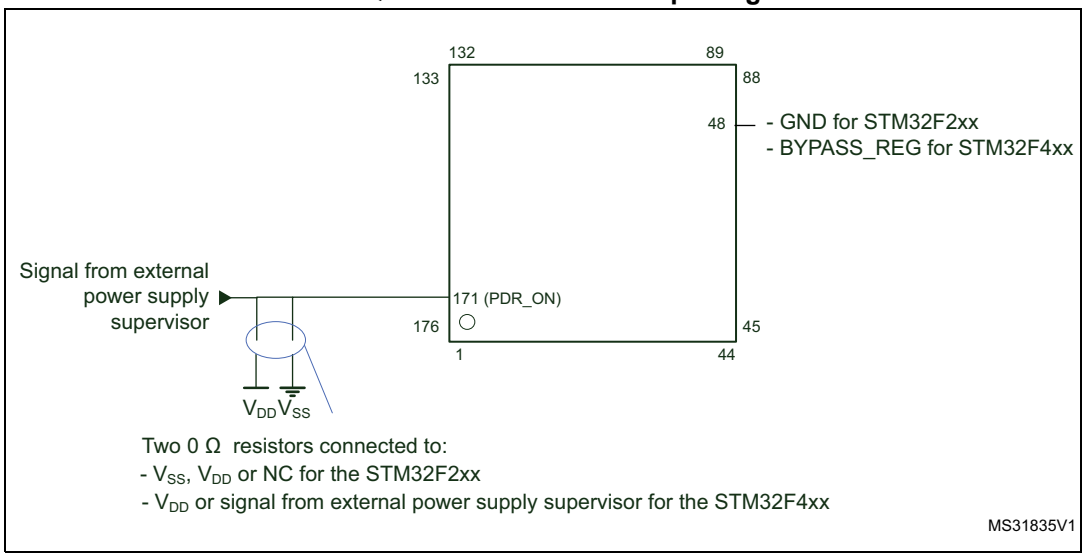

Figure 4. STM32F427xx and STM32F429xx block diagram

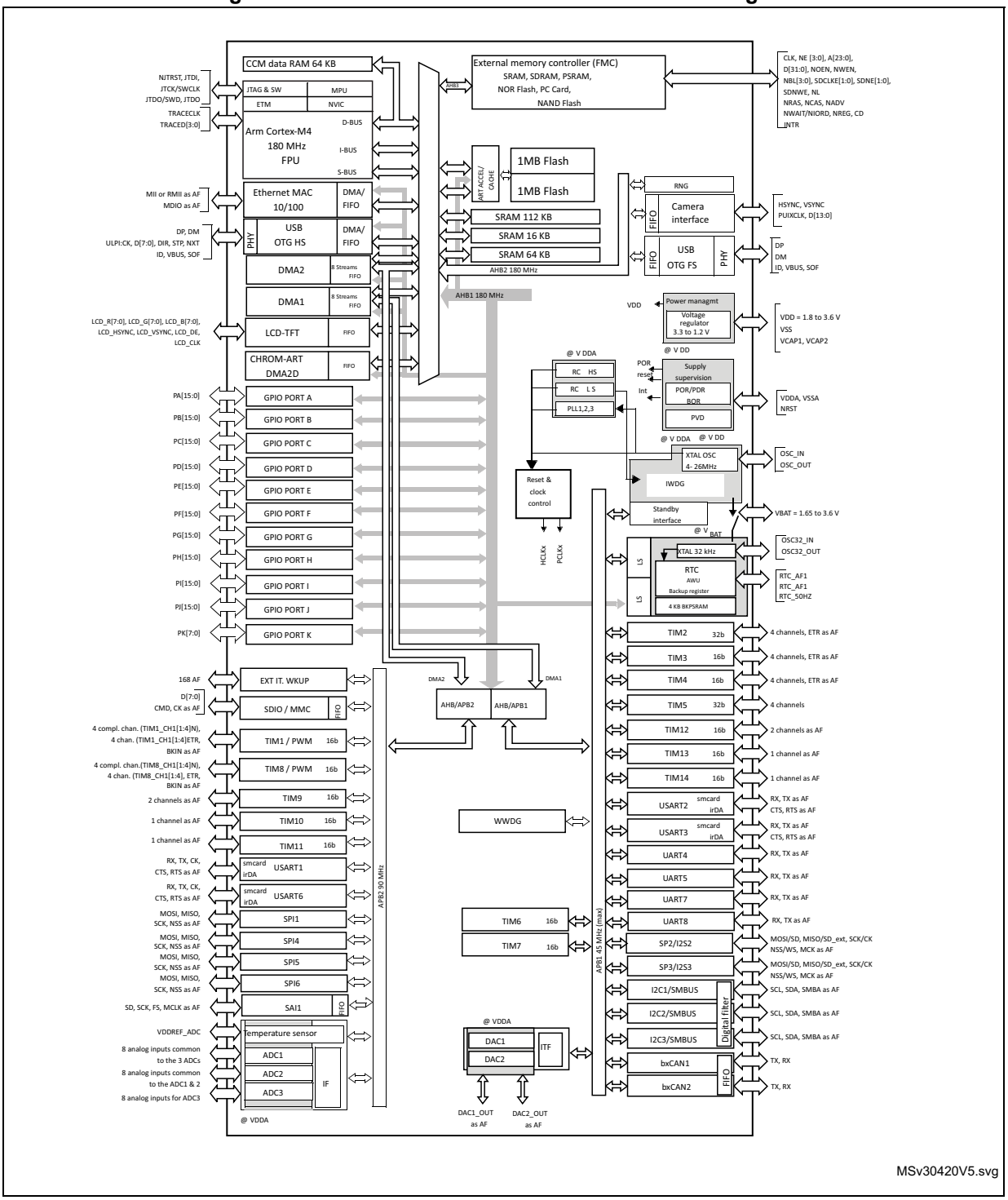

1. The timers connected to APB2 are clocked from TIMxCLK up to 180 MHz, while the timers connected to APB1 are clocked from TIMxCLK either up to 90 MHz or 180 MHz depending on TIMPRE bit configuration in the RCC_DCKCFGR register.
2. The LCD-TFT is available only on STM32F429xx devices.

3 Functional overview

3.1 Arm® Cortex®-M4 with FPU and embedded Flash and SRAM

The Arm® Cortex®-M4 with FPU processor is the latest generation of Arm processors for embedded systems. It was developed to provide a low-cost platform that meets the needs of MCU implementation, with a reduced pin count and low-power consumption, while delivering outstanding computational performance and an advanced response to interrupts.

The Arm® Cortex®-M4 with FPU core is a 32-bit RISC processor that features exceptional code-efficiency, delivering the high-performance expected from an Arm core in the memory size usually associated with 8- and 16-bit devices.

The processor supports a set of DSP instructions which allow efficient signal processing and complex algorithm execution.

Its single precision FPU (floating point unit) speeds up software development by using metalanguage development tools, while avoiding saturation.

The STM32F42x family is compatible with all Arm tools and software.

Figure 4 shows the general block diagram of the STM32F42x family.

Note: Cortex-M4 with FPU core is binary compatible with the Cortex-M3 core.

3.2 Adaptive real-time memory accelerator (ART Accelerator™)

The ART Accelerator™ is a memory accelerator which is optimized for STM32 industry-standard Arm® Cortex®-M4 with FPU processors. It balances the inherent performance advantage of the Arm® Cortex®-M4 with FPU over Flash memory technologies, which normally requires the processor to wait for the Flash memory at higher frequencies.

To release the processor full 225 DMIPS performance at this frequency, the accelerator implements an instruction prefetch queue and branch cache, which increases program execution speed from the 128-bit Flash memory. Based on CoreMark benchmark, the performance achieved thanks to the ART Accelerator is equivalent to 0 wait state program execution from Flash memory at a CPU frequency up to 180 MHz.

3.3 Memory protection unit

The memory protection unit (MPU) is used to manage the CPU accesses to memory to prevent one task to accidentally corrupt the memory or resources used by any other active task. This memory area is organized into up to 8 protected areas that can in turn be divided up into 8 subareas. The protection area sizes are between 32 bytes and the whole 4 gigabytes of addressable memory.

The MPU is especially helpful for applications where some critical or certified code has to be protected against the misbehavior of other tasks. It is usually managed by an RTOS (real-time operating system). If a program accesses a memory location that is prohibited by the MPU, the RTOS can detect it and take action. In an RTOS environment, the kernel can dynamically update the MPU area setting, based on the process to be executed.

The MPU is optional and can be bypassed for applications that do not need it.

3.4 Embedded Flash memory

The devices embed a Flash memory of up to 2 Mbytes available for storing programs and data.

3.5 CRC (cyclic redundancy check) calculation unit

The CRC (cyclic redundancy check) calculation unit is used to get a CRC code from a 32-bit data word and a fixed generator polynomial.

Among other applications, CRC-based techniques are used to verify data transmission or storage integrity. In the scope of the EN/IEC 60335-1 standard, they offer a means of verifying the Flash memory integrity. The CRC calculation unit helps compute a software signature during runtime, to be compared with a reference signature generated at link-time and stored at a given memory location.

3.6 Embedded SRAM

All devices embed:

- Up to 256Kbytes of system SRAM including 64 Kbytes of CCM (core coupled memory) data RAM

  RAM memory is accessed (read/write) at CPU clock speed with 0 wait states.
- 4 Kbytes of backup SRAM

  This area is accessible only from the CPU. Its content is protected against possible unwanted write accesses, and is retained in Standby or V_{BAT} mode.

3.7 Multi-AHB bus matrix

The 32-bit multi-AHB bus matrix interconnects all the masters (CPU, DMAs, Ethernet, USB HS, LCD-TFT, and DMA2D) and the slaves (Flash memory, RAM, FMC, AHB and APB peripherals) and ensures a seamless and efficient operation even when several high-speed peripherals work simultaneously.

Figure 5. STM32F427xx and STM32F429xx Multi-AHB matrix

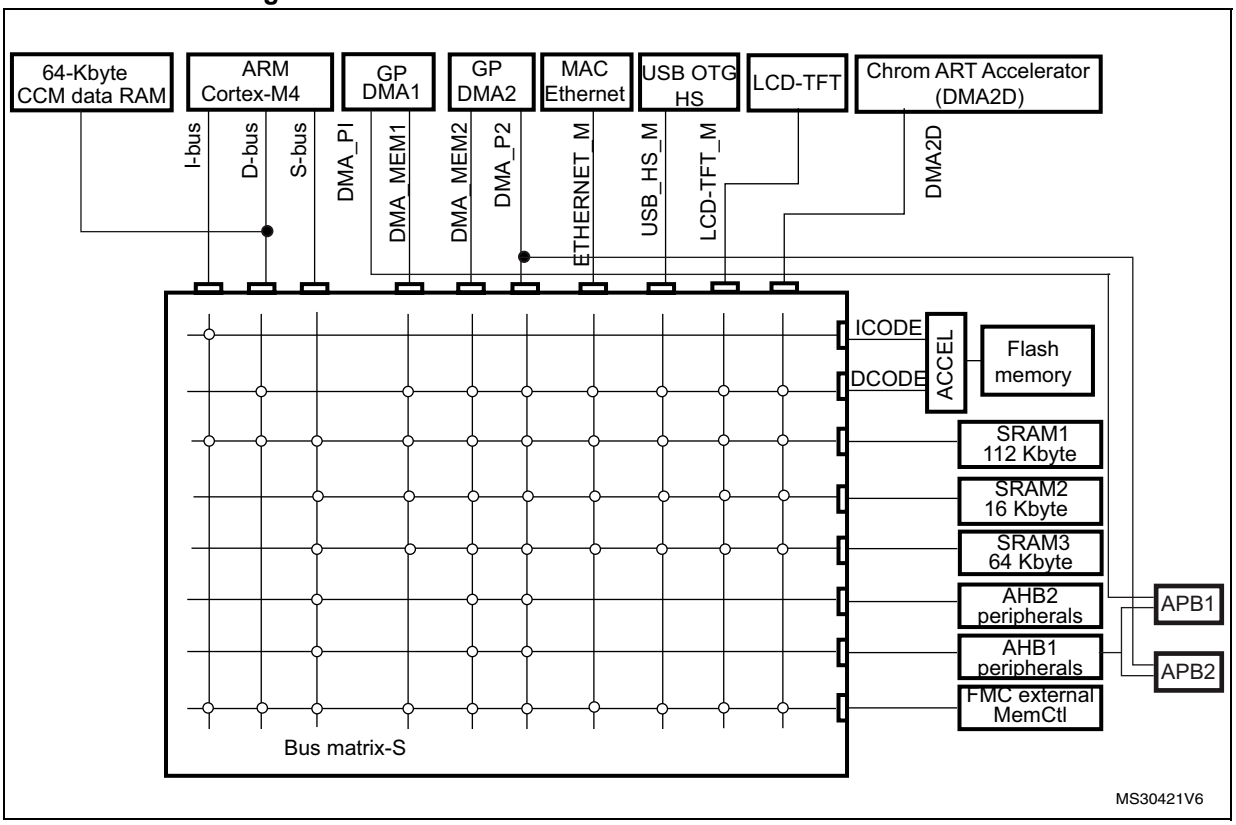

3.8 DMA controller (DMA)

The devices feature two general-purpose dual-port DMAs (DMA1 and DMA2) with 8 streams each. They are able to manage memory-to-memory, peripheral-to-memory and memory-to-peripheral transfers. They feature dedicated FIFOs for APB/AHB peripherals, support burst transfer and are designed to provide the maximum peripheral bandwidth (AHB/APB).

The two DMA controllers support circular buffer management, so that no specific code is needed when the controller reaches the end of the buffer. The two DMA controllers also have a double buffering feature, which automates the use and switching of two memory buffers without requiring any special code.

Each stream is connected to dedicated hardware DMA requests, with support for software trigger on each stream. Configuration is made by software and transfer sizes between source and destination are independent.

The DMA can be used with the main peripherals:

- SPI and I^2S
- I^2C
- USART
- General-purpose, basic and advanced-control timers TIMx
- DAC
- SDIO
- Camera interface (DCMI)
- ADC
- SAI1.

3.9 Flexible memory controller (FMC)

All devices embed an FMC. It has four Chip Select outputs supporting the following modes: PCCard/Compact Flash, SDRAM/LPSDR SDRAM, SRAM, PSRAM, NOR Flash and NAND Flash.

Functionality overview:

- 8-,16-, 32-bit data bus width
- Read FIFO for SDRAM controller
- Write FIFO
- Maximum FMC_CLK/FMC_SDCLK frequency for synchronous accesses is 90 MHz.

LCD parallel interface

The FMC can be configured to interface seamlessly with most graphic LCD controllers. It supports the Intel 8080 and Motorola 6800 modes, and is flexible enough to adapt to specific LCD interfaces. This LCD parallel interface capability makes it easy to build cost-effective graphic applications using LCD modules with embedded controllers or high performance solutions using external controllers with dedicated acceleration.

3.10 LCD-TFT controller (available only on STM32F429xx)

The LCD-TFT display controller provides a 24-bit parallel digital RGB (Red, Green, Blue) and delivers all signals to interface directly to a broad range of LCD and TFT panels up to XGA (1024x768) resolution with the following features:

- 2 displays layers with dedicated FIFO (64x32-bit)
- Color Look-Up table (CLUT) up to 256 colors (256x24-bit) per layer
- Up to 8 Input color formats selectable per layer
- Flexible blending between two layers using alpha value (per pixel or constant)
- Flexible programmable parameters for each layer
- Color keying (transparency color)
- Up to 4 programmable interrupt events.

3.11 Chrom-ART Accelerator™ (DMA2D)

The Chrom-Art Accelerator™ (DMA2D) is a graphic accelerator which offers advanced bit blitting, row data copy and pixel format conversion. It supports the following functions:

- Rectangle filling with a fixed color
- Rectangle copy
- Rectangle copy with pixel format conversion
- Rectangle composition with blending and pixel format conversion.

Various image format coding are supported, from indirect 4bpp color mode up to 32bpp direct color. It embeds dedicated memory to store color lookup tables.

An interrupt can be generated when an operation is complete or at a programmed watermark.

All the operations are fully automatized and are running independently from the CPU or the DMAs.

3.12 Nested vectored interrupt controller (NVIC)

The devices embed a nested vectored interrupt controller able to manage 16 priority levels, and handle up to 91 maskable interrupt channels plus the 16 interrupt lines of the Cortex®-M4 with FPU core.

- Closely coupled NVIC gives low-latency interrupt processing
- Interrupt entry vector table address passed directly to the core
- Allows early processing of interrupts
- Processing of late arriving, higher-priority interrupts
- Support tail chaining
- Processor state automatically saved
- Interrupt entry restored on interrupt exit with no instruction overhead

This hardware block provides flexible interrupt management features with minimum interrupt latency.

3.13 External interrupt/event controller (EXTI)

The external interrupt/event controller consists of 23 edge-detector lines used to generate interrupt/event requests. Each line can be independently configured to select the trigger event (rising edge, falling edge, both) and can be masked independently. A pending register maintains the status of the interrupt requests. The EXTI can detect an external line with a pulse width shorter than the Internal APB2 clock period. Up to 168 GPIOs can be connected to the 16 external interrupt lines.

3.14 Clocks and startup

On reset the 16 MHz internal RC oscillator is selected as the default CPU clock. The 16 MHz internal RC oscillator is factory-trimmed to offer 1% accuracy over the full temperature range. The application can then select as system clock either the RC oscillator or an external 4-26 MHz clock source. This clock can be monitored for failure. If a failure is

detected, the system automatically switches back to the internal RC oscillator and a software interrupt is generated (if enabled). This clock source is input to a PLL thus allowing to increase the frequency up to 180 MHz. Similarly, full interrupt management of the PLL clock entry is available when necessary (for example if an indirectly used external oscillator fails).

Several prescalers allow the configuration of the two AHB buses, the high-speed APB (APB2) and the low-speed APB (APB1) domains. The maximum frequency of the two AHB buses is 180 MHz while the maximum frequency of the high-speed APB domains is 90 MHz. The maximum allowed frequency of the low-speed APB domain is 45 MHz.

The devices embed a dedicated PLL (PLLI2S) and PLLSAI which allows to achieve audio class performance. In this case, the I^2S master clock can generate all standard sampling frequencies from 8 kHz to 192 kHz.

3.15 Boot modes

At startup, boot pins are used to select one out of three boot options:

- Boot from user Flash
- Boot from system memory
- Boot from embedded SRAM

The boot loader is located in system memory. It is used to reprogram the Flash memory through a serial interface. Refer to application note AN2606 for details.

3.16 Power supply schemes

- V_{DD} = 1.7 to 3.6 V: external power supply for I/Os and the internal regulator (when enabled), provided externally through V_{DD} pins.
- V_{SSA}, V_{DDA} = 1.7 to 3.6 V: external analog power supplies for ADC, DAC, Reset blocks, RCs and PLL. V_{DDA} and V_{SSA} must be connected to V_{DD} and V_{SS}, respectively.
- V_{BAT} = 1.65 to 3.6 V: power supply for RTC, external clock 32 kHz oscillator and backup registers (through power switch) when V_{DD} is not present.

Note: V_{DD}/V_{DDA} minimum value of 1.7 V is obtained with the use of an external power supply supervisor (refer to Section 3.17.2: Internal reset OFF). Refer to Table 3: Voltage regulator configuration mode versus device operating mode to identify the packages supporting this option.

3.17 Power supply supervisor

3.17.1 Internal reset ON

On packages embedding the PDR_ON pin, the power supply supervisor is enabled by holding PDR_ON high. On the other package, the power supply supervisor is always enabled.

The device has an integrated power-on reset (POR)/ power-down reset (PDR) circuitry coupled with a Brownout reset (BOR) circuitry. At power-on, POR/PDR is always active and ensures proper operation starting from 1.8 V. After the 1.8 V POR threshold level is

reached, the option byte loading process starts, either to confirm or modify default BOR thresholds, or to disable BOR permanently. Three BOR thresholds are available through option bytes. The device remains in reset mode when V_{DD} is below a specified threshold, $V_{POR/PDR}$ or V_{BOR}, without the need for an external reset circuit.

The device also features an embedded programmable voltage detector (PVD) that monitors the V_{DD}/V_{DDA} power supply and compares it to the V_{PVD} threshold. An interrupt can be generated when V_{DD}/V_{DDA} drops below the V_{PVD} threshold and/or when V_{DD}/V_{DDA} is higher than the V_{PVD} threshold. The interrupt service routine can then generate a warning message and/or put the MCU into a safe state. The PVD is enabled by software.

3.17.2 Internal reset OFF

This feature is available only on packages featuring the PDR_ON pin. The internal power-on reset (POR) / power-down reset (PDR) circuitry is disabled through the PDR_ON pin.

An external power supply supervisor should monitor V_{DD} and should maintain the device in reset mode as long as V_{DD} is below a specified threshold. PDR_ON should be connected to this external power supply supervisor. Refer to *Figure 6: Power supply supervisor interconnection with internal reset OFF*.

Figure 6. Power supply supervisor interconnection with internal reset OFF

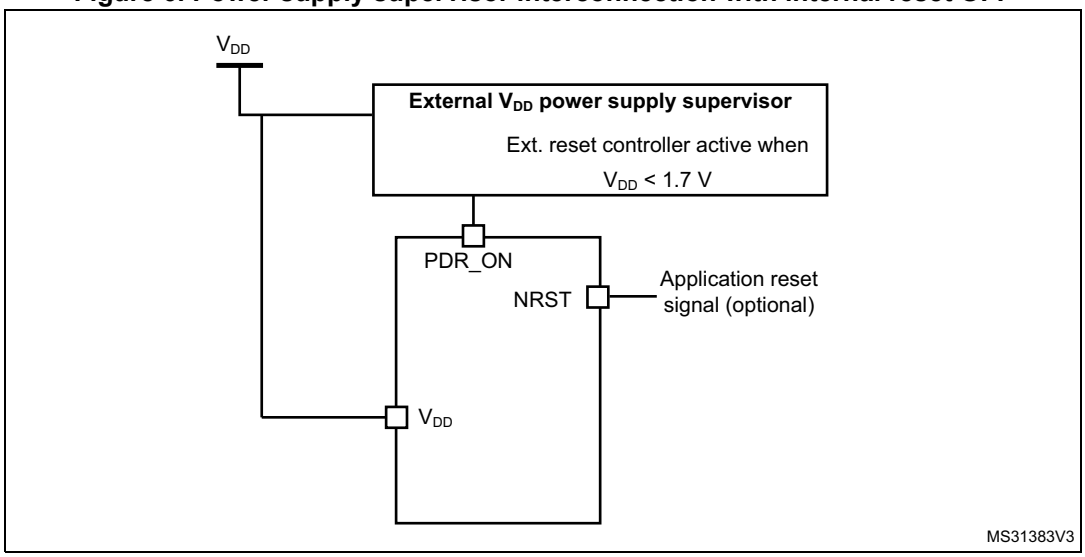

The V_{DD} specified threshold, below which the device must be maintained under reset, is 1.7 V (see *Figure 7*).

A comprehensive set of power-saving mode allows to design low-power applications.

When the internal reset is OFF, the following integrated features are no more supported:

- The integrated power-on reset (POR) / power-down reset (PDR) circuitry is disabled
- The brownout reset (BOR) circuitry must be disabled
- The embedded programmable voltage detector (PVD) is disabled
- V_{BAT} functionality is no more available and V_{BAT} pin should be connected to V_{DD}.

All packages, except for the LQFP100, allow to disable the internal reset through the PDR_ON signal.

Figure 7. PDR_ON control with internal reset OFF

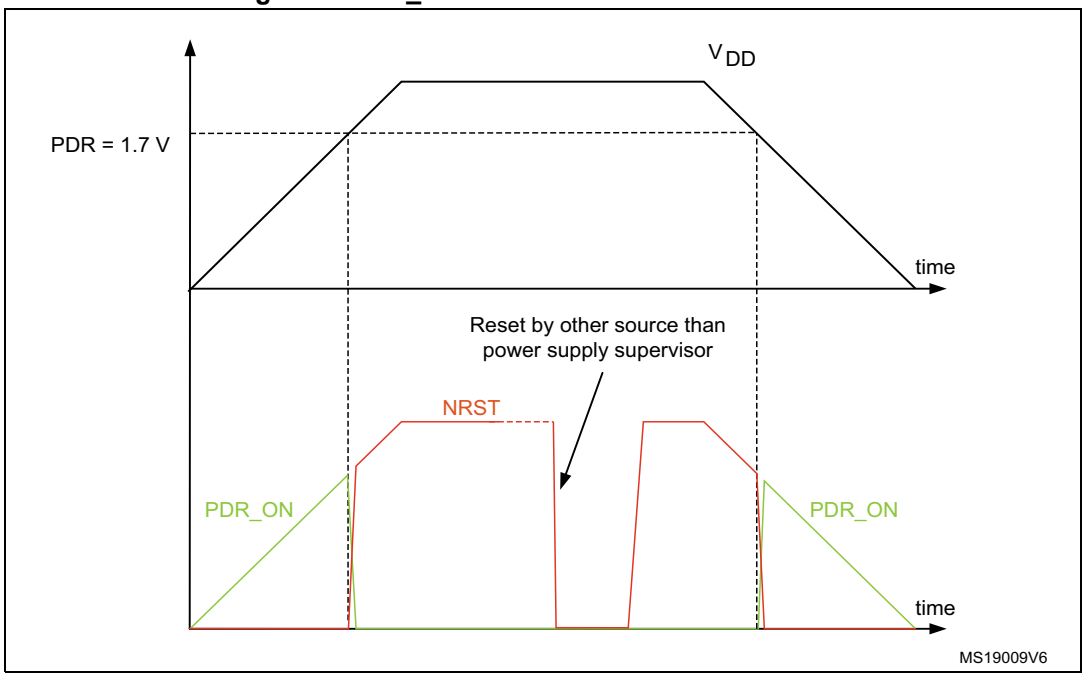

3.18 Voltage regulator

The regulator has four operating modes:

- Regulator ON
  - Main regulator mode (MR)
  - Low power regulator (LPR)
  - Power-down
- Regulator OFF

3.18.1 Regulator ON

On packages embedding the BYPASS_REG pin, the regulator is enabled by holding BYPASS_REG low. On all other packages, the regulator is always enabled.

There are three power modes configured by software when the regulator is ON:

- MR mode used in Run/sleep modes or in Stop modes
  - In Run/Sleep mode

    The MR mode is used either in the normal mode (default mode) or the over-drive mode (enabled by software). Different voltages scaling are provided to reach the best compromise between maximum frequency and dynamic power consumption.

The over-drive mode allows operating at a higher frequency than the normal mode for a given voltage scaling.

– In Stop modes

The MR can be configured in two ways during stop mode:

MR operates in normal mode (default mode of MR in stop mode)

MR operates in under-drive mode (reduced leakage mode).

- LPR is used in the Stop modes:

  The LP regulator mode is configured by software when entering Stop mode.

  Like the MR mode, the LPR can be configured in two ways during stop mode:

  – LPR operates in normal mode (default mode when LPR is ON)

  – LPR operates in under-drive mode (reduced leakage mode).

- Power-down is used in Standby mode.

  The Power-down mode is activated only when entering in Standby mode. The regulator output is in high impedance and the kernel circuitry is powered down, inducing zero consumption. The contents of the registers and SRAM are lost.

Refer to *Table 3* for a summary of voltage regulator modes versus device operating modes.

Two external ceramic capacitors should be connected on V_{CAP_1} and V_{CAP_2} pin. Refer to *Figure 22: Power supply scheme* and *Table 19: VCAP1/VCAP2 operating conditions*.

All packages have the regulator ON feature.

Table 3. Voltage regulator configuration mode versus device operating mode(1)

Voltage regulator configuration	Run mode	Sleep mode	Stop mode	Standby mode
Normal mode	MR	MR	MR or LPR	-
Over-drive mode(2)	MR	MR	-	-
Under-drive mode	-	-	MR or LPR	-
Power-down mode	-	-	-	Yes

1. '-' means that the corresponding configuration is not available.
2. The over-drive mode is not available when V_{DD} = 1.7 to 2.1 V.

3.18.2 Regulator OFF

This feature is available only on packages featuring the BYPASS_REG pin. The regulator is disabled by holding BYPASS_REG high. The regulator OFF mode allows to supply externally a V_{12} voltage source through V_{CAP_1} and V_{CAP_2} pins.

Since the internal voltage scaling is not managed internally, the external voltage value must be aligned with the targeted maximum frequency. Refer to *Table 17: General operating conditions*.The two 2.2 µF ceramic capacitors should be replaced by two 100 nF decoupling capacitors. Refer to *Figure 22: Power supply scheme*.

When the regulator is OFF, there is no more internal monitoring on V_{12}. An external power supply supervisor should be used to monitor the V_{12} of the logic power domain. PA0 pin should be used for this purpose, and act as power-on reset on V_{12} power domain.

In regulator OFF mode, the following features are no more supported:

- PA0 cannot be used as a GPIO pin since it allows to reset a part of the V_{12} logic power domain which is not reset by the NRST pin.
- As long as PA0 is kept low, the debug mode cannot be used under power-on reset. As a consequence, PA0 and NRST pins must be managed separately if the debug connection under reset or pre-reset is required.
- The over-drive and under-drive modes are not available.
- The Standby mode is not available.

Figure 8. Regulator OFF

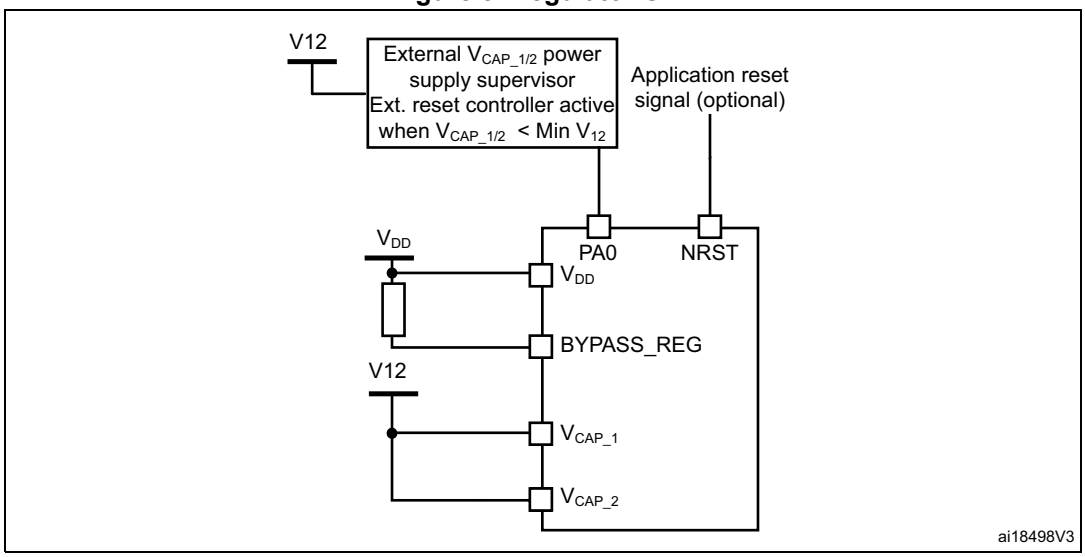

The following conditions must be respected:

- V_{DD} should always be higher than V_{CAP_1} and V_{CAP_2} to avoid current injection between power domains.
- If the time for V_{CAP_1} and V_{CAP_2} to reach V_{12} minimum value is faster than the time for V_{DD} to reach 1.7 V, then PA0 should be kept low to cover both conditions: until V_{CAP_1} and V_{CAP_2} reach V_{12} minimum value and until V_{DD} reaches 1.7 V (see *Figure 9*).
- Otherwise, if the time for V_{CAP_1} and V_{CAP_2} to reach V_{12} minimum value is slower than the time for V_{DD} to reach 1.7 V, then PA0 could be asserted low externally (see *Figure 10*).
- If V_{CAP_1} and V_{CAP_2} go below V_{12} minimum value and V_{DD} is higher than 1.7 V, then a reset must be asserted on PA0 pin.

Note: The minimum value of V_{12} depends on the maximum frequency targeted in the application (see Table 17: General operating conditions).

Figure 9. Startup in regulator OFF: slow V_{DD} slope - power-down reset risen after V_{CAP_1}/V_{CAP_2} stabilization

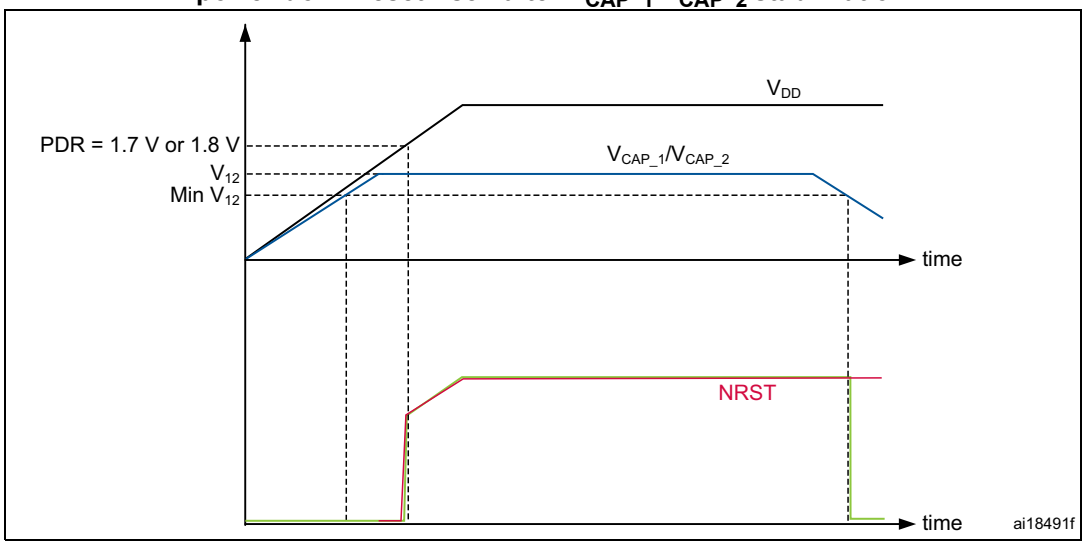

1. This figure is valid whatever the internal reset mode (ON or OFF).

Figure 10. Startup in regulator OFF mode: fast V_{DD} slope - power-down reset risen before V_{CAP_1}/V_{CAP_2} stabilization

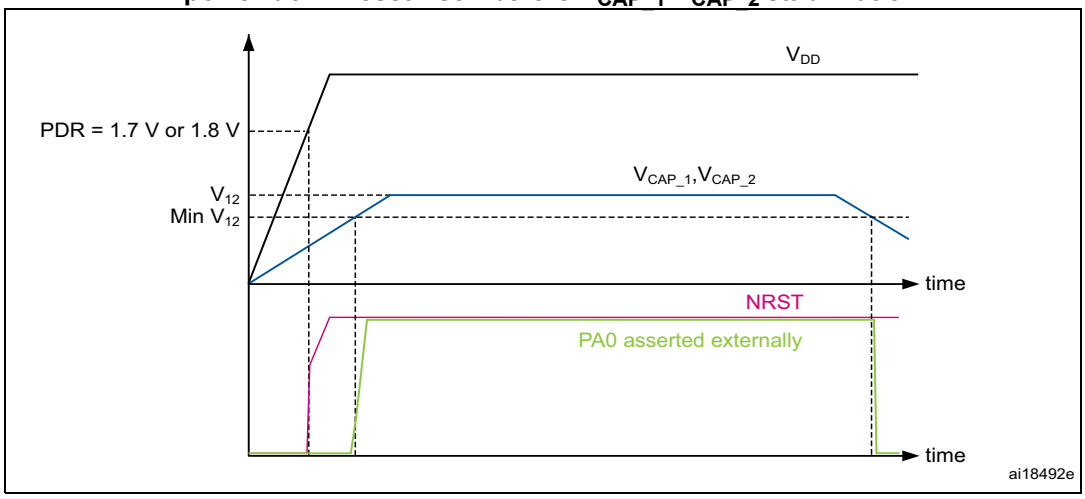

1. This figure is valid whatever the internal reset mode (ON or OFF).

3.18.3 Regulator ON/OFF and internal reset ON/OFF availability

Table 4. Regulator ON/OFF and internal reset ON/OFF availability

Package	Regulator ON	Regulator OFF	Internal reset ON	Internal reset OFF
LQFP100	Yes	No	Yes	No
LQFP144, LQFP208			Yes PDR_ON set to V_{DD}	Yes PDR_ON connected to an external power supply supervisor
WLCSP143, LQFP176, UFBGA169, UFBGA176, TFBGA216	Yes BYPASS_REG set to V_{SS}	Yes BYPASS_REG set to V_{DD}		

3.19 Real-time clock (RTC), backup SRAM and backup registers

The backup domain includes:

- The real-time clock (RTC)
- 4 Kbytes of backup SRAM
- 20 backup registers

The real-time clock (RTC) is an independent BCD timer/counter. Dedicated registers contain the second, minute, hour (in 12/24 hour), week day, date, month, year, in BCD (binary-coded decimal) format. Correction for 28, 29 (leap year), 30, and 31 day of the month are performed automatically. The RTC provides a programmable alarm and programmable periodic interrupts with wakeup from Stop and Standby modes. The sub-seconds value is also available in binary format.

It is clocked by a 32.768 kHz external crystal, resonator or oscillator, the internal low-power RC oscillator or the high-speed external clock divided by 128. The internal low-speed RC has a typical frequency of 32 kHz. The RTC can be calibrated using an external 512 Hz output to compensate for any natural quartz deviation.

Two alarm registers are used to generate an alarm at a specific time and calendar fields can be independently masked for alarm comparison. To generate a periodic interrupt, a 16-bit programmable binary auto-reload downcounter with programmable resolution is available and allows automatic wakeup and periodic alarms from every 120 µs to every 36 hours.

A 20-bit prescaler is used for the time base clock. It is by default configured to generate a time base of 1 second from a clock at 32.768 kHz.

The 4-Kbyte backup SRAM is an EEPROM-like memory area. It can be used to store data which need to be retained in VBAT and standby mode. This memory area is disabled by default to minimize power consumption (see *Section 3.20: Low-power modes*). It can be enabled by software.

The backup registers are 32-bit registers used to store 80 bytes of user application data when V_{DD} power is not present. Backup registers are not reset by a system, a power reset, or when the device wakes up from the Standby mode (see *Section 3.20: Low-power modes*).

Additional 32-bit registers contain the programmable alarm subseconds, seconds, minutes, hours, day, and date.

Like backup SRAM, the RTC and backup registers are supplied through a switch that is powered either from the V_{DD} supply when present or from the V_{BAT} pin.

3.20 Low-power modes

The devices support three low-power modes to achieve the best compromise between low power consumption, short startup time and available wakeup sources:

- **Sleep mode**

  In Sleep mode, only the CPU is stopped. All peripherals continue to operate and can wake up the CPU when an interrupt/event occurs.

- **Stop mode**

  The Stop mode achieves the lowest power consumption while retaining the contents of SRAM and registers. All clocks in the 1.2 V domain are stopped, the PLL, the HSI RC and the HSE crystal oscillators are disabled.

  The voltage regulator can be put either in main regulator mode (MR) or in low-power mode (LPR). Both modes can be configured as follows (see *Table 5: Voltage regulator modes in stop mode*):

  – Normal mode (default mode when MR or LPR is enabled)

  – Under-drive mode.

  The device can be woken up from the Stop mode by any of the EXTI line (the EXTI line source can be one of the 16 external lines, the PVD output, the RTC alarm / wakeup / tamper / time stamp events, the USB OTG FS/HS wakeup or the Ethernet wakeup).

Table 5. Voltage regulator modes in stop mode

Voltage regulator configuration	Main regulator (MR)	Low-power regulator (LPR)
Normal mode	MR ON	LPR ON
Under-drive mode	MR in under-drive mode	LPR in under-drive mode

- **Standby mode**

  The Standby mode is used to achieve the lowest power consumption. The internal voltage regulator is switched off so that the entire 1.2 V domain is powered off. The PLL, the HSI RC and the HSE crystal oscillators are also switched off. After entering Standby mode, the SRAM and register contents are lost except for registers in the backup domain and the backup SRAM when selected.

  The device exits the Standby mode when an external reset (NRST pin), an IWDG reset, a rising edge on the WKUP pin, or an RTC alarm / wakeup / tamper /time stamp event occurs.

  The standby mode is not supported when the embedded voltage regulator is bypassed and the 1.2 V domain is controlled by an external power.

3.21 V_{BAT} operation

The V_{BAT} pin allows to power the device V_{BAT} domain from an external battery, an external supercapacitor, or from V_{DD} when no external battery and an external supercapacitor are present.

V_{BAT} operation is activated when V_{DD} is not present.

The V_{BAT} pin supplies the RTC, the backup registers and the backup SRAM.

Note: When the microcontroller is supplied from V_{BAT}, external interrupts and RTC alarm/events do not exit it from V_{BAT} operation.

When PDR_ON pin is not connected to V_{DD} (Internal Reset OFF), the V_{BAT} functionality is no more available and V_{BAT} pin should be connected to V_{DD}.

3.22 Timers and watchdogs

The devices include two advanced-control timers, eight general-purpose timers, two basic timers and two watchdog timers.

All timer counters can be frozen in debug mode.

Table 6 compares the features of the advanced-control, general-purpose and basic timers.

Table 6. Timer feature comparison

Timer type	Timer	Counter resolution	Counter type	Prescaler factor	DMA request generation	Capture/ compare channels	Complementary output	Max interface clock (MHz)	Max timer clock (MHz) (1)
Advanced -control	TIM1, TIM8	16-bit	Up, Down, Up/down	Any integer between 1 and 65536	Yes	4	Yes	90	180
General purpose	TIM2, TIM5	32-bit	Up, Down, Up/down	Any integer between 1 and 65536	Yes	4	No	45	90/180
	TIM3, TIM4	16-bit	Up, Down, Up/down	Any integer between 1 and 65536	Yes	4	No	45	90/180
	TIM9	16-bit	Up	Any integer between 1 and 65536	No	2	No	90	180
	TIM10 , TIM11	16-bit	Up	Any integer between 1 and 65536	No	1	No	90	180
	TIM12	16-bit	Up	Any integer between 1 and 65536	No	2	No	45	90/180
	TIM13 , TIM14	16-bit	Up	Any integer between 1 and 65536	No	1	No	45	90/180
Basic	TIM6, TIM7	16-bit	Up	Any integer between 1 and 65536	Yes	0	No	45	90/180

1. The maximum timer clock is either 90 or 180 MHz depending on TIMPRE bit configuration in the RCC_DCKCFGR register.

3.22.1 Advanced-control timers (TIM1, TIM8)

The advanced-control timers (TIM1, TIM8) can be seen as three-phase PWM generators multiplexed on 6 channels. They have complementary PWM outputs with programmable inserted dead times. They can also be considered as complete general-purpose timers. Their 4 independent channels can be used for:

- Input capture
- Output compare
- PWM generation (edge- or center-aligned modes)
- One-pulse mode output

If configured as standard 16-bit timers, they have the same features as the general-purpose TIMx timers. If configured as 16-bit PWM generators, they have full modulation capability (0-100%).

The advanced-control timer can work together with the TIMx timers via the Timer Link feature for synchronization or event chaining.

TIM1 and TIM8 support independent DMA request generation.

3.22.2 General-purpose timers (TIMx)

There are ten synchronizable general-purpose timers embedded in the STM32F42x devices (see *Table 6* for differences).

- **TIM2, TIM3, TIM4, TIM5**

  The STM32F42x include 4 full-featured general-purpose timers: TIM2, TIM5, TIM3, and TIM4.The TIM2 and TIM5 timers are based on a 32-bit auto-reload up/downcounter and a 16-bit prescaler. The TIM3 and TIM4 timers are based on a 16-bit auto-reload up/downcounter and a 16-bit prescaler. They all feature 4 independent channels for input capture/output compare, PWM or one-pulse mode output. This gives up to 16 input capture/output compare/PWMs on the largest packages.

  The TIM2, TIM3, TIM4, TIM5 general-purpose timers can work together, or with the other general-purpose timers and the advanced-control timers TIM1 and TIM8 via the Timer Link feature for synchronization or event chaining.

  Any of these general-purpose timers can be used to generate PWM outputs.

  TIM2, TIM3, TIM4, TIM5 all have independent DMA request generation. They are capable of handling quadrature (incremental) encoder signals and the digital outputs from 1 to 4 hall-effect sensors.

- **TIM9, TIM10, TIM11, TIM12, TIM13, and TIM14**

  These timers are based on a 16-bit auto-reload upcounter and a 16-bit prescaler. TIM10, TIM11, TIM13, and TIM14 feature one independent channel, whereas TIM9 and TIM12 have two independent channels for input capture/output compare, PWM or one-pulse mode output. They can be synchronized with the TIM2, TIM3, TIM4, TIM5 full-featured general-purpose timers. They can also be used as simple time bases.

3.22.3 Basic timers TIM6 and TIM7

These timers are mainly used for DAC trigger and waveform generation. They can also be used as a generic 16-bit time base.

TIM6 and TIM7 support independent DMA request generation.

3.22.4 Independent watchdog

The independent watchdog is based on a 12-bit downcounter and 8-bit prescaler. It is clocked from an independent 32 kHz internal RC and as it operates independently from the main clock, it can operate in Stop and Standby modes. It can be used either as a watchdog to reset the device when a problem occurs, or as a free-running timer for application timeout management. It is hardware- or software-configurable through the option bytes.

3.22.5 Window watchdog

The window watchdog is based on a 7-bit downcounter that can be set as free-running. It can be used as a watchdog to reset the device when a problem occurs. It is clocked from the main clock. It has an early warning interrupt capability and the counter can be frozen in debug mode.

3.22.6 SysTick timer

This timer is dedicated to real-time operating systems, but could also be used as a standard downcounter. It features:

- A 24-bit downcounter
- Autoreload capability
- Maskable system interrupt generation when the counter reaches 0
- Programmable clock source.

3.23 Inter-integrated circuit interface (I^2C)

Up to three I²C bus interfaces can operate in multimaster and slave modes. They can support the standard (up to 100 KHz), and fast (up to 400 KHz) modes. They support the 7/10-bit addressing mode and the 7-bit dual addressing mode (as slave). A hardware CRC generation/verification is embedded.

They can be served by DMA and they support SMBus 2.0/PMBus.

The devices also include programmable analog and digital noise filters (see *Table 7*).

Table 7. Comparison of I2C analog and digital filters

	Analog filter	Digital filter
Pulse width of suppressed spikes	≥ 50 ns	Programmable length from 1 to 15 I2C peripheral clocks

3.24 Universal synchronous/asynchronous receiver transmitters (USART)

The devices embed four universal synchronous/asynchronous receiver transmitters (USART1, USART2, USART3 and USART6) and four universal asynchronous receiver transmitters (UART4, UART5, UART7, and UART8).

These six interfaces provide asynchronous communication, IrDA SIR ENDEC support, multiprocessor communication mode, single-wire half-duplex communication mode and have LIN Master/Slave capability. The USART1 and USART6 interfaces are able to

communicate at speeds of up to 11.25 Mbit/s. The other available interfaces communicate at up to 5.62 bit/s.

USART1, USART2, USART3 and USART6 also provide hardware management of the CTS and RTS signals, Smart Card mode (ISO 7816 compliant) and SPI-like communication capability. All interfaces can be served by the DMA controller.

Table 8. USART feature comparison(1)

USART name	Standard features	Modem (RTS/CTS)	LIN	SPI master	irDA	Smartcard (ISO 7816)	Max. baud rate in Mbit/s (oversampling by 16)	Max. baud rate in Mbit/s (oversampling by 8)	APB mapping
USART1	X	X	X	X	X	X	5.62	11.25	APB2 (max. 90 MHz)
USART2	X	X	X	X	X	X	2.81	5.62	APB1 (max. 45 MHz)
USART3	X	X	X	X	X	X	2.81	5.62	APB1 (max. 45 MHz)
UART4	X	-	X	-	X	-	2.81	5.62	APB1 (max. 45 MHz)
UART5	X	-	X	-	X	-	2.81	5.62	APB1 (max. 45 MHz)
USART6	X	X	X	X	X	X	5.62	11.25	APB2 (max. 90 MHz)
UART7	X	-	X	-	X	-	2.81	5.62	APB1 (max. 45 MHz)
UART8	X	-	X	-	X	-	2.81	5.62	APB1 (max. 45 MHz)

1. X = feature supported.

3.25 Serial peripheral interface (SPI)

The devices feature up to six SPIs in slave and master modes in full-duplex and simplex communication modes. SPI1, SPI4, SPI5, and SPI6 can communicate at up to 45 Mbits/s, SPI2 and SPI3 can communicate at up to 22.5 Mbit/s. The 3-bit prescaler gives 8 master mode frequencies and the frame is configurable to 8 bits or 16 bits. The hardware CRC generation/verification supports basic SD Card/MMC modes. All SPIs can be served by the DMA controller.

The SPI interface can be configured to operate in TI mode for communications in master mode and slave mode.

3.26 Inter-integrated sound (I^2S)

Two standard I^2S interfaces (multiplexed with SPI2 and SPI3) are available. They can be operated in master or slave mode, in full duplex and simplex communication modes, and can be configured to operate with a 16-/32-bit resolution as an input or output channel. Audio sampling frequencies from 8 kHz up to 192 kHz are supported. When either or both of the I^2S interfaces is/are configured in master mode, the master clock can be output to the external DAC/CODEC at 256 times the sampling frequency.

All I2Sx can be served by the DMA controller.

Note: For I2S2 *full-duplex mode, I2S2_CK and I2S2_WS signals can be used only on GPIO Port B and GPIO Port D.*

3.27 Serial Audio interface (SAI1)

The serial audio interface (SAI1) is based on two independent audio sub-blocks which can operate as transmitter or receiver with their FIFO. Many audio protocols are supported by each block: I2S standards, LSB or MSB-justified, PCM/DSP, TDM, AC'97 and SPDIF output, supporting audio sampling frequencies from 8 kHz up to 192 kHz. Both sub-blocks can be configured in master or in slave mode.

In master mode, the master clock can be output to the external DAC/CODEC at 256 times of the sampling frequency.

The two sub-blocks can be configured in synchronous mode when full-duplex mode is required.

SAI1 can be served by the DMA controller.

3.28 Audio PLL (PLLI2S)

The devices feature an additional dedicated PLL for audio I^2S and SAI applications. It allows to achieve error-free I^2S sampling clock accuracy without compromising on the CPU performance, while using USB peripherals.

The PLLI2S configuration can be modified to manage an I^2S/SAI sample rate change without disabling the main PLL (PLL) used for CPU, USB and Ethernet interfaces.

The audio PLL can be programmed with very low error to obtain sampling rates ranging from 8 KHz to 192 KHz.

In addition to the audio PLL, a master clock input pin can be used to synchronize the I^2S/SAI flow with an external PLL (or Codec output).

3.29 Audio and LCD PLL(PLLSAI)

An additional PLL dedicated to audio and LCD-TFT is used for SAI1 peripheral in case the PLLI2S is programmed to achieve another audio sampling frequency (49.152 MHz or 11.2896 MHz) and the audio application requires both sampling frequencies simultaneously.

The PLLSAI is also used to generate the LCD-TFT clock.

3.30 Secure digital input/output interface (SDIO)

An SD/SDIO/MMC host interface is available, that supports MultiMediaCard System Specification Version 4.2 in three different databus modes: 1-bit (default), 4-bit and 8-bit.

The interface allows data transfer at up to 48 MHz, and is compliant with the SD Memory Card Specification Version 2.0.

The SDIO Card Specification Version 2.0 is also supported with two different databus modes: 1-bit (default) and 4-bit.

The current version supports only one SD/SDIO/MMC4.2 card at any one time and a stack of MMC4.1 or previous.

In addition to SD/SDIO/MMC, this interface is fully compliant with the CE-ATA digital protocol Rev1.1.

3.31 Ethernet MAC interface with dedicated DMA and IEEE 1588 support

The devices provide an IEEE-802.3-2002-compliant media access controller (MAC) for ethernet LAN communications through an industry-standard medium-independent interface (MII) or a reduced medium-independent interface (RMII). The microcontroller requires an external physical interface device (PHY) to connect to the physical LAN bus (twisted-pair, fiber, etc.). The PHY is connected to the device MII port using 17 signals for MII or 9 signals for RMII, and can be clocked using the 25 MHz (MII) from the microcontroller.

The devices include the following features:

- Supports 10 and 100 Mbit/s rates
- Dedicated DMA controller allowing high-speed transfers between the dedicated SRAM and the descriptors (see the STM32F4xx reference manual for details)
- Tagged MAC frame support (VLAN support)
- Half-duplex (CSMA/CD) and full-duplex operation
- MAC control sublayer (control frames) support
- 32-bit CRC generation and removal
- Several address filtering modes for physical and multicast address (multicast and group addresses)
- 32-bit status code for each transmitted or received frame
- Internal FIFOs to buffer transmit and receive frames. The transmit FIFO and the receive FIFO are both 2 Kbytes.
- Supports hardware PTP (precision time protocol) in accordance with IEEE 1588 2008 (PTP V2) with the time stamp comparator connected to the TIM2 input
- Triggers interrupt when system time becomes greater than target time

3.32 Controller area network (bxCAN)

The two CANs are compliant with the 2.0A and B (active) specifications with a bitrate up to 1 Mbit/s. They can receive and transmit standard frames with 11-bit identifiers as well as extended frames with 29-bit identifiers. Each CAN has three transmit mailboxes, two receive

FIFOS with 3 stages and 28 shared scalable filter banks (all of them can be used even if one CAN is used). 256 bytes of SRAM are allocated for each CAN.

3.33 Universal serial bus on-the-go full-speed (OTG_FS)

The devices embed an USB OTG full-speed device/host/OTG peripheral with integrated transceivers. The USB OTG FS peripheral is compliant with the USB 2.0 specification and with the OTG 1.0 specification. It has software-configurable endpoint setting and supports suspend/resume. The USB OTG full-speed controller requires a dedicated 48 MHz clock that is generated by a PLL connected to the HSE oscillator. The major features are:

- Combined Rx and Tx FIFO size of 320 × 35 bits with dynamic FIFO sizing
- Supports the session request protocol (SRP) and host negotiation protocol (HNP)
- 4 bidirectional endpoints
- 8 host channels with periodic OUT support
- HNP/SNP/IP inside (no need for any external resistor)
- For OTG/Host modes, a power switch is needed in case bus-powered devices are connected

3.34 Universal serial bus on-the-go high-speed (OTG_HS)

The devices embed a USB OTG high-speed (up to 480 Mb/s) device/host/OTG peripheral. The USB OTG HS supports both full-speed and high-speed operations. It integrates the transceivers for full-speed operation (12 MB/s) and features a UTMI low-pin interface (ULPI) for high-speed operation (480 MB/s). When using the USB OTG HS in HS mode, an external PHY device connected to the ULPI is required.

The USB OTG HS peripheral is compliant with the USB 2.0 specification and with the OTG 1.0 specification. It has software-configurable endpoint setting and supports suspend/resume. The USB OTG full-speed controller requires a dedicated 48 MHz clock that is generated by a PLL connected to the HSE oscillator.

The major features are:

- Combined Rx and Tx FIFO size of 1 Kbit × 35 with dynamic FIFO sizing
- Supports the session request protocol (SRP) and host negotiation protocol (HNP)
- 6 bidirectional endpoints
- 12 host channels with periodic OUT support
- Internal FS OTG PHY support
- External HS or HS OTG operation supporting ULPI in SDR mode. The OTG PHY is connected to the microcontroller ULPI port through 12 signals. It can be clocked using the 60 MHz output.
- Internal USB DMA
- HNP/SNP/IP inside (no need for any external resistor)
- for OTG/Host modes, a power switch is needed in case bus-powered devices are connected

3.35 Digital camera interface (DCMI)

The devices embed a camera interface that can connect with camera modules and CMOS sensors through an 8-bit to 14-bit parallel interface, to receive video data. The camera interface can sustain a data transfer rate up to 54 Mbyte/s at 54 MHz. It features:

- Programmable polarity for the input pixel clock and synchronization signals
- Parallel data communication can be 8-, 10-, 12- or 14-bit
- Supports 8-bit progressive video monochrome or raw bayer format, YCbCr 4:2:2 progressive video, RGB 565 progressive video or compressed data (like JPEG)
- Supports continuous mode or snapshot (a single frame) mode
- Capability to automatically crop the image

3.36 Random number generator (RNG)

All devices embed an RNG that delivers 32-bit random numbers generated by an integrated analog circuit.

3.37 General-purpose input/outputs (GPIOs)

Each of the GPIO pins can be configured by software as output (push-pull or open-drain, with or without pull-up or pull-down), as input (floating, with or without pull-up or pull-down) or as peripheral alternate function. Most of the GPIO pins are shared with digital or analog alternate functions. All GPIOs are high-current-capable and have speed selection to better manage internal noise, power consumption and electromagnetic emission.

The I/O configuration can be locked if needed by following a specific sequence in order to avoid spurious writing to the I/Os registers.

Fast I/O handling allowing maximum I/O toggling up to 90 MHz.

3.38 Analog-to-digital converters (ADCs)

Three 12-bit analog-to-digital converters are embedded and each ADC shares up to 16 external channels, performing conversions in the single-shot or scan mode. In scan mode, automatic conversion is performed on a selected group of analog inputs.

Additional logic functions embedded in the ADC interface allow:

- Simultaneous sample and hold
- Interleaved sample and hold

The ADC can be served by the DMA controller. An analog watchdog feature allows very precise monitoring of the converted voltage of one, some or all selected channels. An interrupt is generated when the converted voltage is outside the programmed thresholds.

To synchronize A/D conversion and timers, the ADCs could be triggered by any of TIM1, TIM2, TIM3, TIM4, TIM5, or TIM8 timer.

3.39 Temperature sensor

The temperature sensor has to generate a voltage that varies linearly with temperature. The conversion range is between 1.7 V and 3.6 V. The temperature sensor is internally connected to the same input channel as V_{BAT}, ADC1_IN18, which is used to convert the sensor output voltage into a digital value. When the temperature sensor and V_{BAT} conversion are enabled at the same time, only V_{BAT} conversion is performed.

As the offset of the temperature sensor varies from chip to chip due to process variation, the internal temperature sensor is mainly suitable for applications that detect temperature changes instead of absolute temperatures. If an accurate temperature reading is needed, then an external temperature sensor part should be used.

3.40 Digital-to-analog converter (DAC)

The two 12-bit buffered DAC channels can be used to convert two digital signals into two analog voltage signal outputs.

This dual digital Interface supports the following features:

- two DAC converters: one for each output channel
- 8-bit or 10-bit monotonic output
- left or right data alignment in 12-bit mode
- synchronized update capability
- noise-wave generation
- triangular-wave generation
- dual DAC channel independent or simultaneous conversions
- DMA capability for each channel
- external triggers for conversion
- input voltage reference V_{REF+}

Eight DAC trigger inputs are used in the device. The DAC channels are triggered through the timer update outputs that are also connected to different DMA streams.

3.41 Serial wire JTAG debug port (SWJ-DP)

The Arm SWJ-DP interface is embedded, and is a combined JTAG and serial wire debug port that enables either a serial wire debug or a JTAG probe to be connected to the target.

Debug is performed using 2 pins only instead of 5 required by the JTAG (JTAG pins could be re-use as GPIO with alternate function): the JTAG TMS and TCK pins are shared with SWDIO and SWCLK, respectively, and a specific sequence on the TMS pin is used to switch between JTAG-DP and SW-DP.

3.42 Embedded Trace Macrocell™

The Arm Embedded Trace Macrocell provides a greater visibility of the instruction and data flow inside the CPU core by streaming compressed data at a very high rate from the STM32F42x through a small number of ETM pins to an external hardware trace port analyzer (TPA) device. The TPA is connected to a host computer using USB, Ethernet, or any other high-speed channel. Real-time instruction and data flow activity can be recorded and then formatted for display on the host computer that runs the debugger software. TPA hardware is commercially available from common development tool vendors.

The Embedded Trace Macrocell operates with third party debugger software tools.

4 Pinouts and pin description

Figure 11. STM32F42x LQFP100 pinout

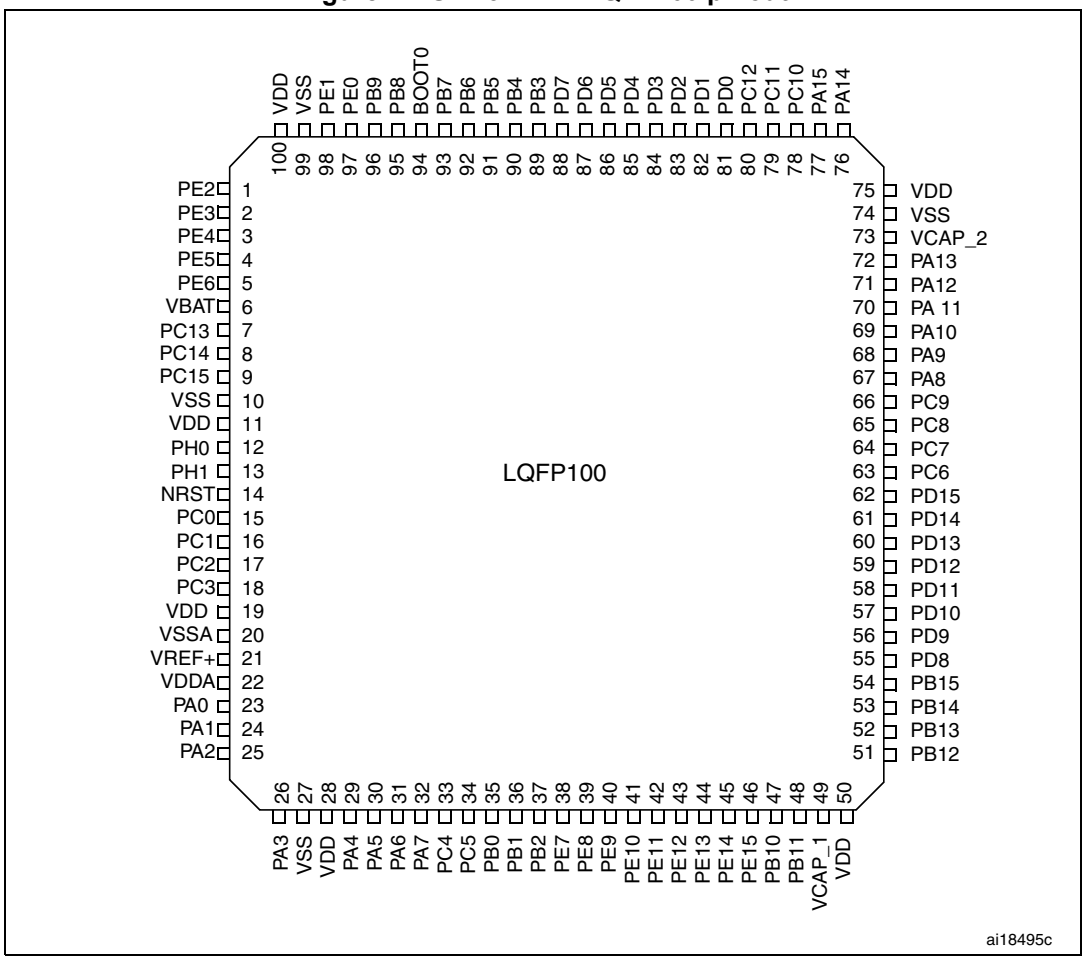

1. The above figure shows the package top view.

Figure 12. STM32F42x WLCSP143 ballout

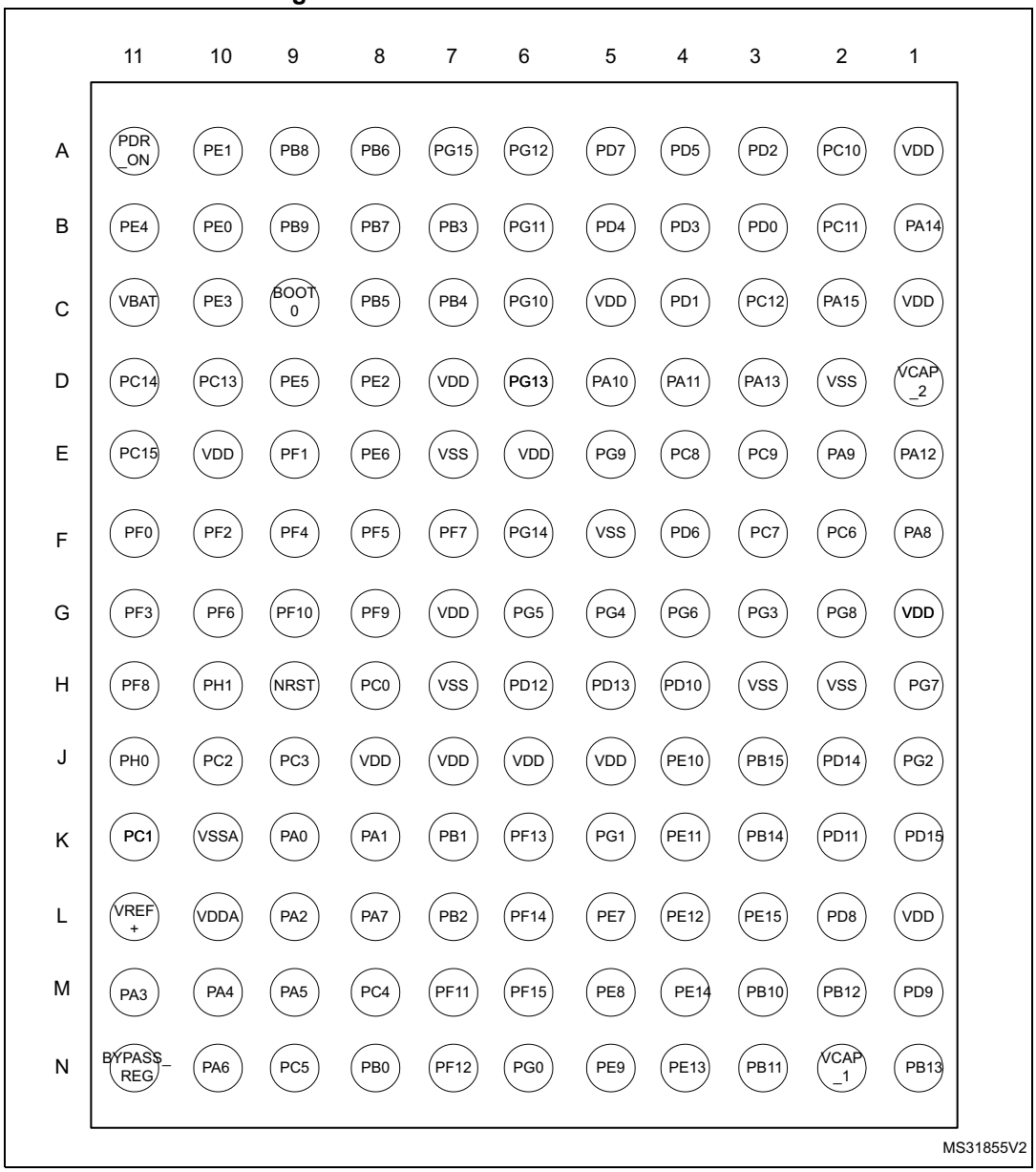

1. The above figure shows the package bump view.

Figure 13. STM32F42x LQFP144 pinout

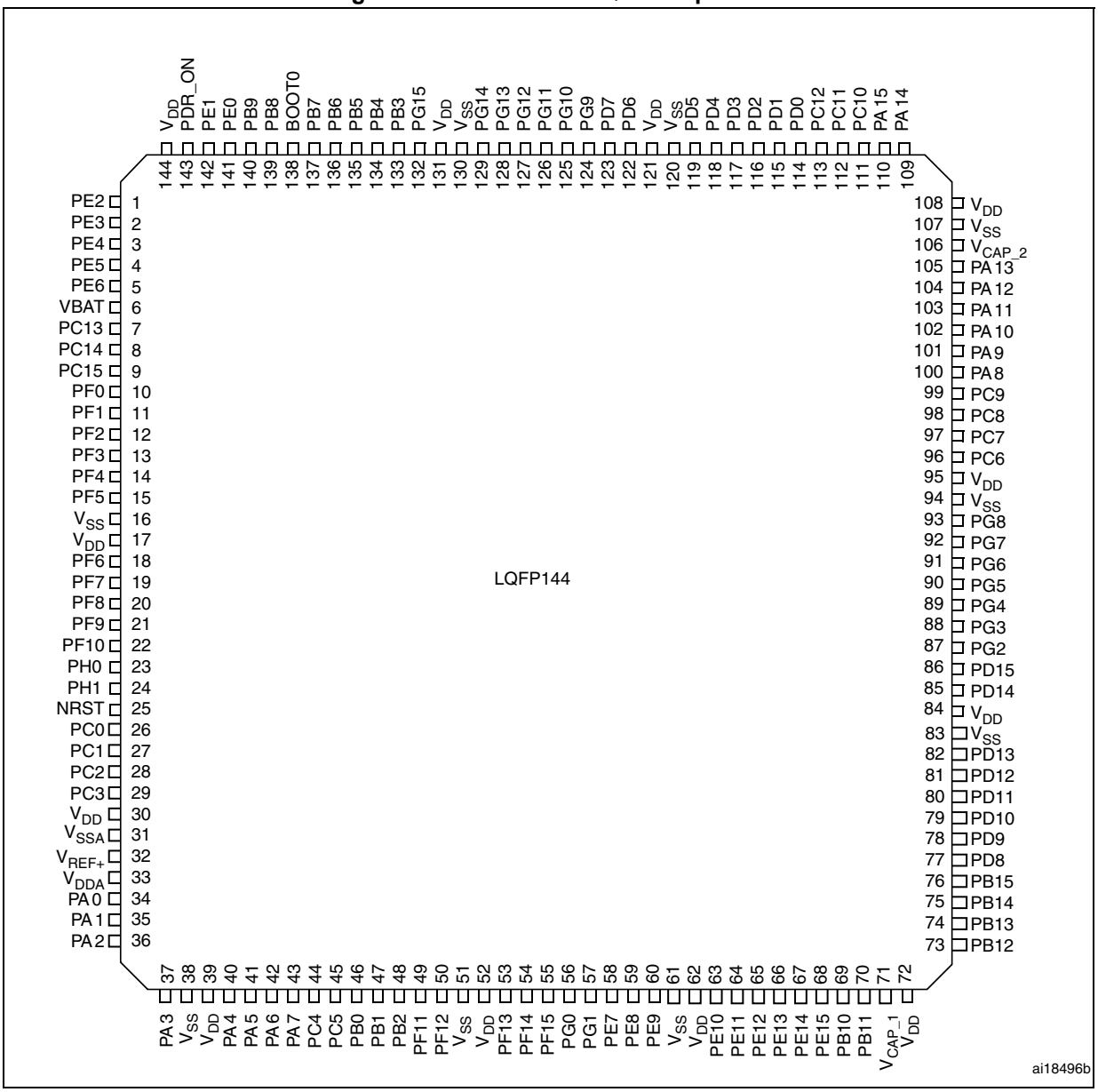

1. The above figure shows the package top view.

Figure 14. STM32F42x LQFP176 pinout

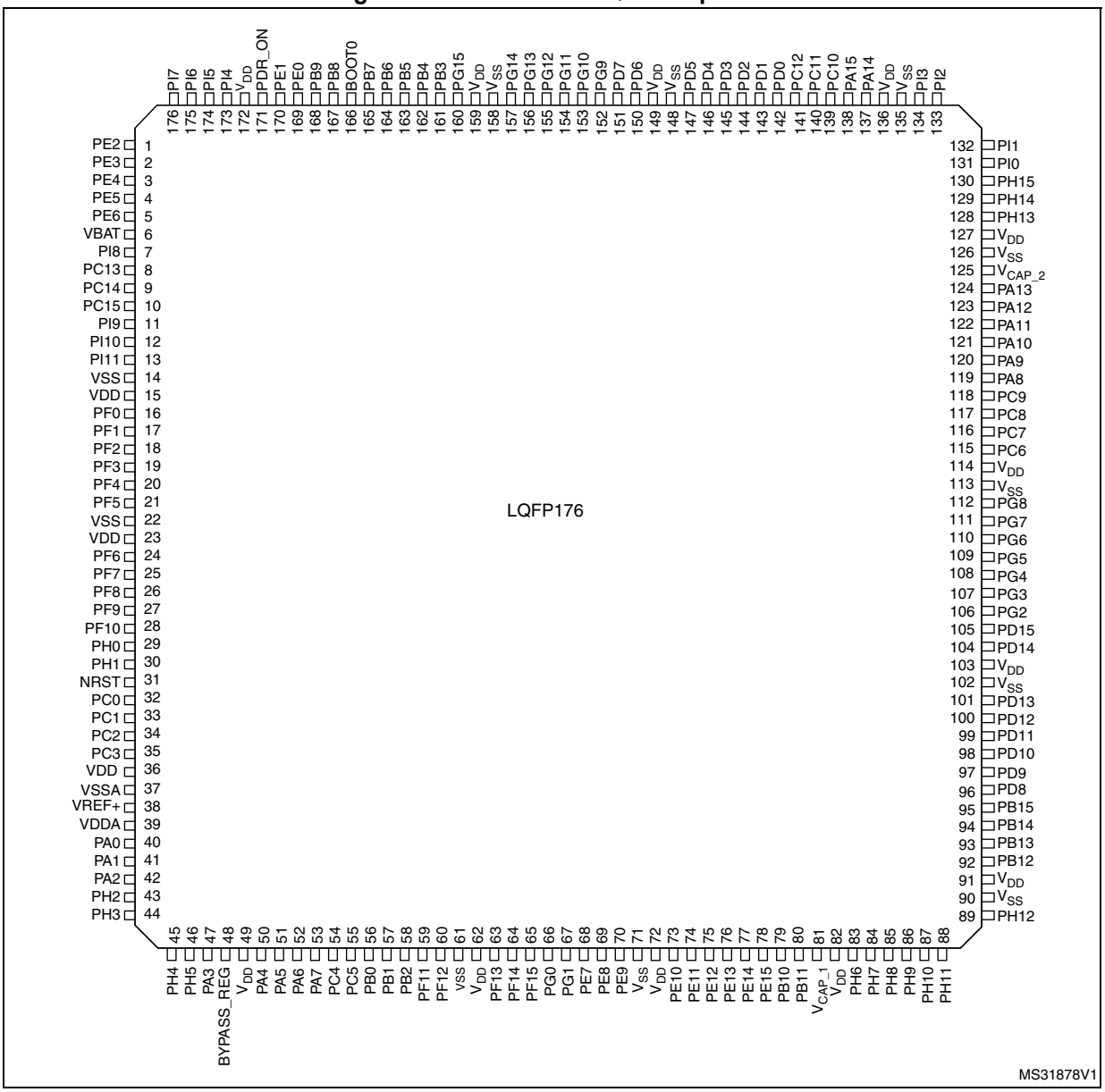

1. The above figure shows the package top view.

Figure 15. STM32F42x LQFP208 pinout

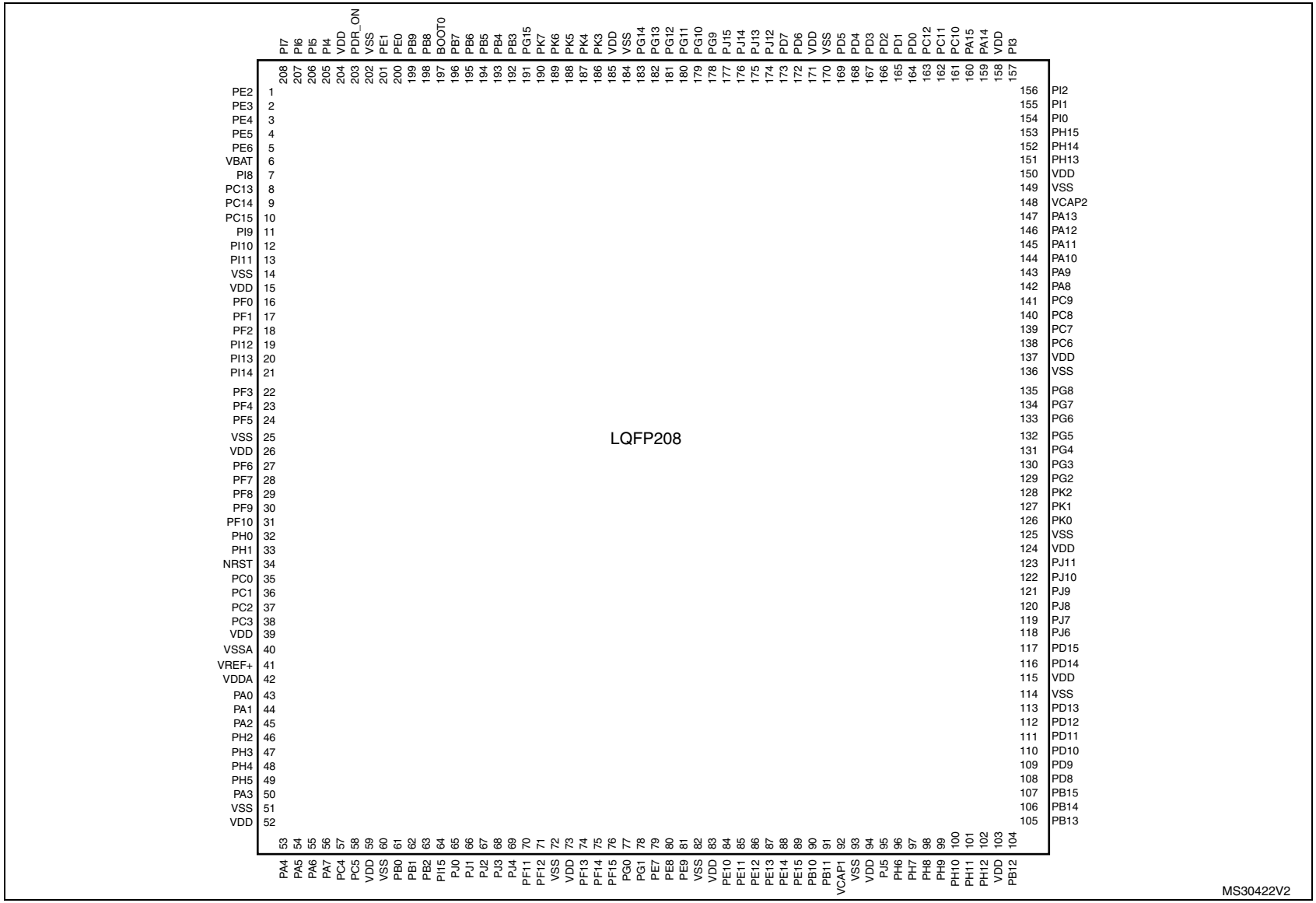

1. The above figure shows the package top view.

Figure 16. STM32F42x UFBGA169 ballout

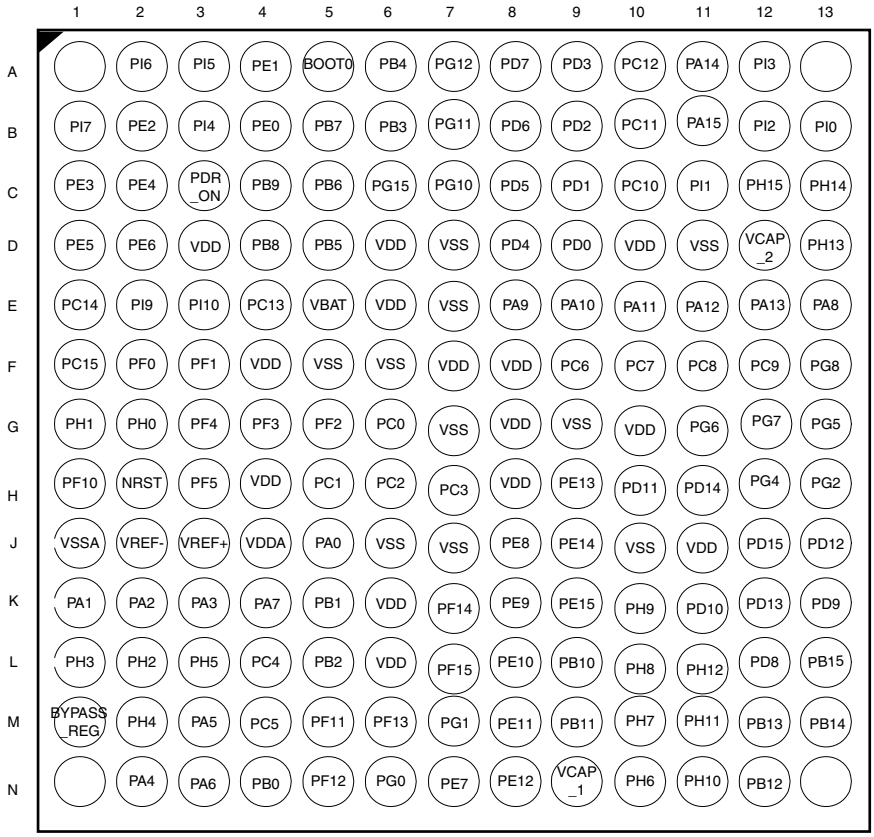

1. The above figure shows the package top view.
2. The 4 corners balls, A1,A13, N1 and N13, are not bonded internally and should be left not connected on the PCB.

Figure 17. STM32F42x UFBGA176 ballout

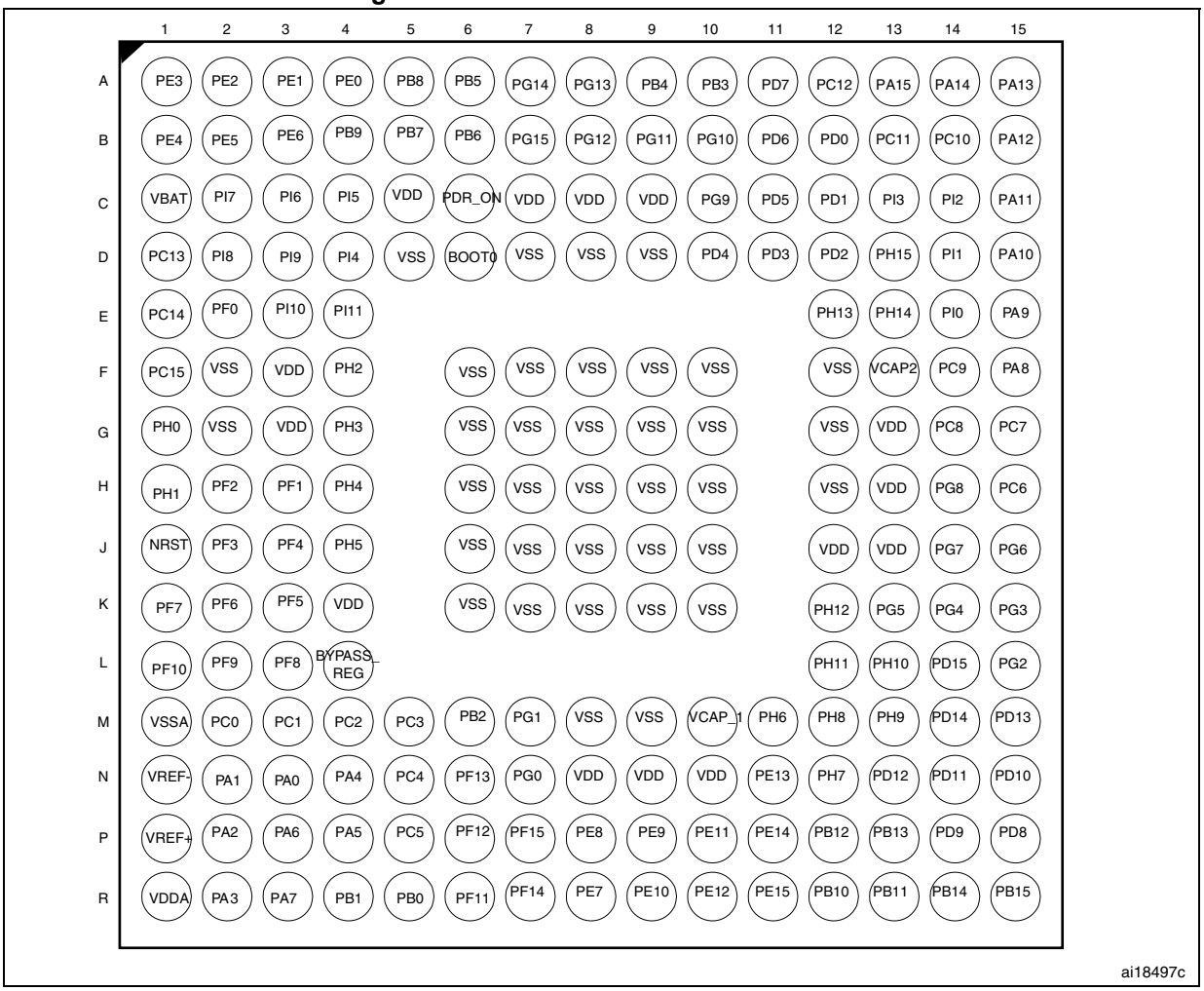

1. The above figure shows the package top view.

Figure 18. STM32F42x TFBGA216 ballout

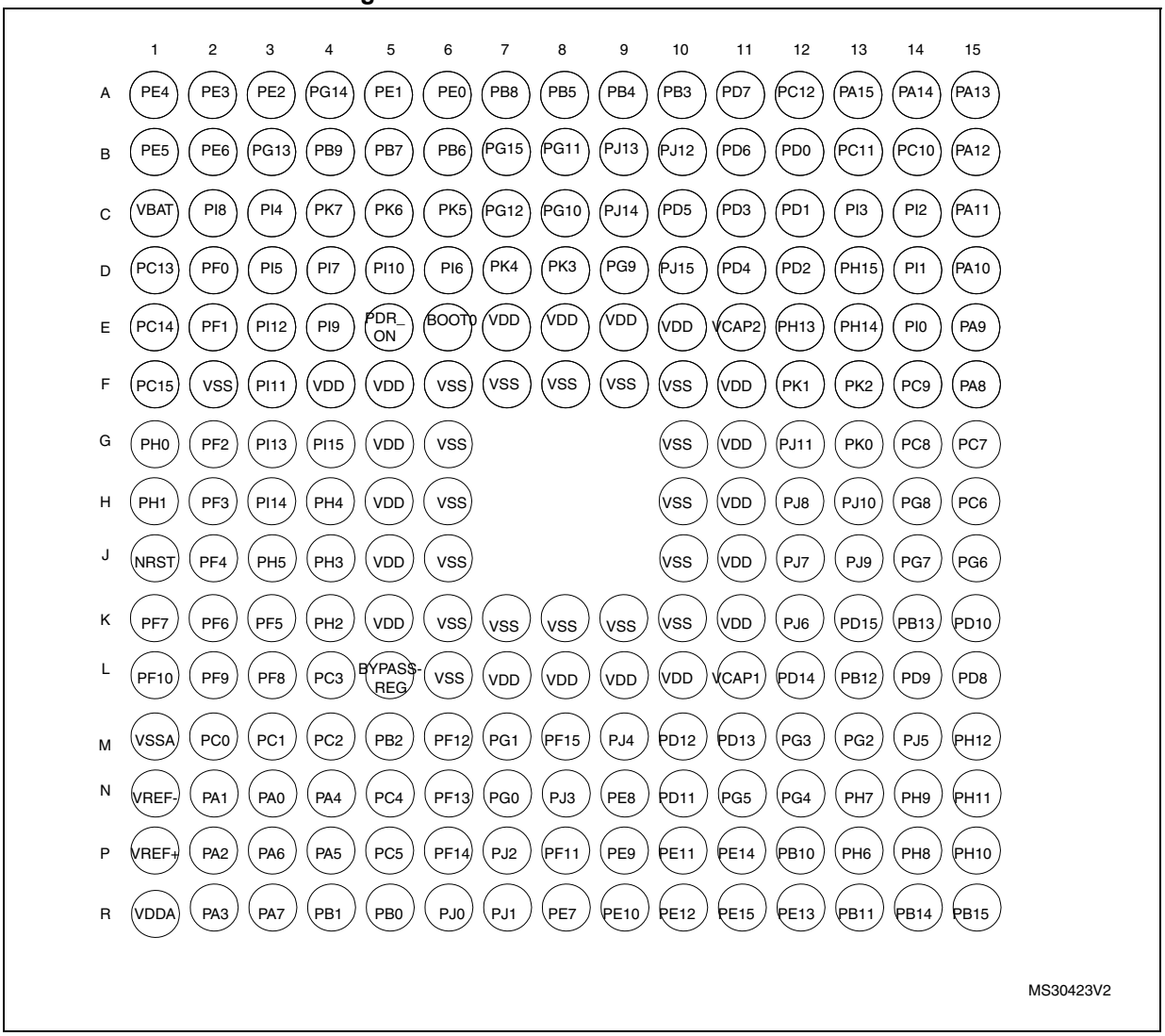

1. The above figure shows the package top view.

Table 9. Legend/abbreviations used in the pinout table

Name	Abbreviation	Definition
Pin name	Unless otherwise specified in brackets below the pin name, the pin function during and after reset is the same as the actual pin name	
Pin type	S	Supply pin
	I	Input only pin
	I/O	Input / output pin
I/O structure	FT	5 V tolerant I/O
	TTa	3.3 V tolerant I/O directly connected to ADC
	B	Dedicated BOOT0 pin
	RST	Bidirectional reset pin with weak pull-up resistor
Notes	Unless otherwise specified by a note, all I/Os are set as floating inputs during and after reset	
Alternate functions	Functions selected through GPIOx_AFR registers	
Additional functions	Functions directly selected/enabled through peripheral registers	

Table 10. STM32F427xx and STM32F429xx pin and ball definitions

Pin number								Pin name (function after reset)(1)	Pin type	I / O structure	Notes	Alternate functions	Additional functions
LQFP100	LQFP144	UFBGA169	UFBGA176	LQFP176	WLCSP143	LQFP208	TFBGA216						
1	1	B2	A2	1	D8	1	A3	PE2	I/O	FT	-	TRACECLK, SPI4_SCK, SAI1_MCLK_A, ETH_MII_TXD3, FMC_A23, EVENTOUT	-
2	2	C1	A1	2	C10	2	A2	PE3	I/O	FT	-	TRACED0, SAI1_SD_B, FMC_A19, EVENTOUT	-
3	3	C2	B1	3	B11	3	A1	PE4	I/O	FT	-	TRACED1, SPI4_NSS, SAI1_FS_A, FMC_A20, DCMI_D4, LCD_B0, EVENTOUT	-

Table 10. STM32F427xx and STM32F429xx pin and ball definitions (continued)

Pin number								Pin name (function after reset)(1)	Pin type	I / O structure	Notes	Alternate functions	Additional functions
LQFP100	LQFP144	UFBGA169	UFBGA176	LQFP176	WLCSP143	LQFP208	TFBGA216						
4	4	D1	B2	4	D9	4	B1	PE5	I/O	FT	-	TRACED2, TIM9_CH1, SPI4_MISO, SAI1_SCK_A, FMC_A21, DCMI_D6, LCD_G0, EVENTOUT	-
5	5	D2	B3	5	E8	5	B2	PE6	I/O	FT	-	TRACED3, TIM9_CH2, SPI4_MOSI, SAI1_SD_A, FMC_A22, DCMI_D7, LCD_G1, EVENTOUT	-
-	-	-	-	-	-	-	G6	V_{SS}	S	-	-	-	-
-	-	-	-	-	-	-	F5	V_{DD}	S	-	-	-	-
6	6	E5	C1	6	C11	6	C1	V_{BAT}	S	-	-	-	-
-	-	NC (2)	D2	7	-	7	C2	PI8	I/O	FT	(3) (4)	EVENTOUT	TAMP_2
7	7	E4	D1	8	D10	8	D1	PC13	I/O	FT	(3) (4)	EVENTOUT	TAMP_1
8	8	E1	E1	9	D11	9	E1	PC14-OSC32_IN (PC14)	I/O	FT	(3) (4)	EVENTOUT	OSC32_IN (5)
9	9	F1	F1	10	E11	10	F1	PC15-OSC32_OUT (PC15)	I/O	FT	(3) (4)	EVENTOUT	OSC32_OUT(5)
-	-	-	-	-	-	-	G5	V_{DD}	S	-	-	-	-
-	-	E2	D3	11	-	11	E4	PI9	I/O	FT	-	CAN1_RX, FMC_D30, LCD_VSYNC, EVENTOUT	-
-	-	E3	E3	12	-	12	D5	PI10	I/O	FT	-	ETH_MII_RX_ER, FMC_D31, LCD_HSYNC, EVENTOUT	-
-	-	NC (2)	E4	13	-	13	F3	PI11	I/O	FT	-	OTG_HS_ULPI_DIR, EVENTOUT	-
-	-	F6	F2	14	E7	14	F2	V_{SS}	S	-	-	-	-
-	-	F4	F3	15	E10	15	F4	V_{DD}	S	-	-	-	-

Table 10. STM32F427xx and STM32F429xx pin and ball definitions (continued)

Pin number								Pin name (function after reset)(1)	Pin type	I / O structure	Notes	Alternate functions	Additional functions
LQFP100	LQFP144	UFBGA169	UFBGA176	LQFP176	WLCSP143	LQFP208	TFBGA216						
-	10	F2	E2	16	F11	16	D2	PF0	I/O	FT	-	I2C2_SDA, FMC_A0, EVENTOUT	-
-	11	F3	H3	17	E9	17	E2	PF1	I/O	FT	-	I2C2_SCL, FMC_A1, EVENTOUT	-
-	12	G5	H2	18	F10	18	G2	PF2	I/O	FT	-	I2C2_SMBA, FMC_A2, EVENTOUT	-
-	-	-	-	-	-	19	E3	PI12	I/O	FT	-	LCD_HSYNC, EVENTOUT	-
-	-	-	-	-	-	20	G3	PI13	I/O	FT	-	LCD_VSYNC, EVENTOUT	-
-	-	-	-	-	-	21	H3	PI14	I/O	FT		LCD_CLK, EVENTOUT	-
-	13	G4	J2	19	G11	22	H2	PF3	I/O	FT	(5)	FMC_A3, EVENTOUT	ADC3_IN9
-	14	G3	J3	20	F9	23	J2	PF4	I/O	FT	(5)	FMC_A4, EVENTOUT	ADC3_ IN14
-	15	H3	K3	21	F8	24	K3	PF5	I/O	FT	(5)	FMC_A5, EVENTOUT	ADC3_ IN15
10	16	G7	G2	22	H7	25	H6	V_{SS}	S	-	-	-	-
11	17	G8	G3	23	-	26	H5	V_{DD}	S	-	-	-	-
-	18	NC (2)	K2	24	G10	27	K2	PF6	I/O	FT	(5)	TIM10_CH1, SPI5_NSS, SAI1_SD_B, UART7_Rx, FMC_NIORD, EVENTOUT	ADC3_IN4
-	19	NC (2)	K1	25	F7	28	K1	PF7	I/O	FT	(5)	TIM11_CH1, SPI5_SCK, SAI1_MCLK_B, UART7_Tx, FMC_NREG, EVENTOUT	ADC3_IN5
-	20	NC (2)	L3	26	H11	29	L3	PF8	I/O	FT	(5)	SPI5_MISO, SAI1_SCK_B, TIM13_CH1, FMC_NIOWR, EVENTOUT	ADC3_IN6

Table 10. STM32F427xx and STM32F429xx pin and ball definitions (continued)

Pin number								Pin name (function after reset)(1)	Pin type	I / O structure	Notes	Alternate functions	Additional functions
LQFP100	LQFP144	UFBGA169	UFBGA176	LQFP176	WLCSP143	LQFP208	TFBGA216						
-	21	NC (2)	L2	27	G8	30	L2	PF9	I/O	FT	(5)	SPI5_MOSI, SAI1_FS_B, TIM14_CH1, FMC_CD, EVENTOUT	ADC3_IN7
-	22	H1	L1	28	G9	31	L1	PF10	I/O	FT	(5)	FMC_INTR, DCMI_D11, LCD_DE, EVENTOUT	ADC3_IN8
12	23	G2	G1	29	J11	32	G1	PH0-OSC_IN (PH0)	I/O	FT	-	EVENTOUT	OSC_IN(5)
13	24	G1	H1	30	H10	33	H1	PH1-OSC_OUT (PH1)	I/O	FT	-	EVENTOUT	OSC_OUT (5)
14	25	H2	J1	31	H9	34	J1	NRST	I/O	RST	-	-	-
15	26	G6	M2	32	H8	35	M2	PC0	I/O	FT	(5)	OTG_HS_ULPI_STP, FMC_SDNWE, EVENTOUT	ADC123_IN10
16	27	H5	M3	33	K11	36	M3	PC1	I/O	FT	(5)	ETH_MDC, EVENTOUT	ADC123_IN11
17	28	H6	M4	34	J10	37	M4	PC2	I/O	FT	(5)	SPI2_MISO, I2S2ext_SD, OTG_HS_ULPI_DIR, ETH_MII_TXD2, FMC_SDNE0, EVENTOUT	ADC123_IN12
18	29	H7	M5	35	J9	38	L4	PC3	I/O	FT	(5)	SPI2_MOSI/I2S2_SD, OTG_HS_ULPI_NXT, ETH_MII_TX_CLK, FMC_SDCKE0, EVENTOUT	ADC123_IN13
19	30	-	-	36	G7	39	J5	V_{DD}	S	-	-	-	-
-	-	-	-	-	-	-	J6	V_{SS}	S	-	-	-	-
20	31	J1	M1	37	K10	40	M1	V_{SSA}	S	-	-	-	-
-	-	J2	N1	-	-	-	N1	V_{REF-}	S	-	-	-	-
21	32	J3	P1	38	L11	41	P1	V_{REF+}	S	-	-	-	-

Table 10. STM32F427xx and STM32F429xx pin and ball definitions (continued)

Pin number								Pin name (function after reset)(1)	Pin type	I / O structure	Notes	Alternate functions	Additional functions
LQFP100	LQFP144	UFBGA169	UFBGA176	LQFP176	WLCSP143	LQFP208	TFBGA216						
22	33	J4	R1	39	L10	42	R1	V_{DDA}	S	-	-	-	-
23	34	J5	N3	40	K9	43	N3	PA0-WKUP (PA0)	I/O	FT	(6)	TIM2_CH1/TIM2_ETR, TIM5_CH1, TIM8_ETR, USART2_CTS, UART4_TX, ETH_MII_CRS, EVENTOUT	ADC123_ IN0/WKUP (5)
24	35	K1	N2	41	K8	44	N2	PA1	I/O	FT	(5)	TIM2_CH2, TIM5_CH2, USART2_RTS, UART4_RX, ETH_MII_RX_CLK/ETH _RMII_REF_CLK, EVENTOUT	ADC123_ IN1
25	36	K2	P2	42	L9	45	P2	PA2	I/O	FT	(5)	TIM2_CH3, TIM5_CH3, TIM9_CH1, USART2_TX, ETH_MDIO, EVENTOUT	ADC123_ IN2
-	-	L2	F4	43	-	46	K4	PH2	I/O	FT	-	ETH_MII_CRS, FMC_SDCKE0, LCD_R0, EVENTOUT	-
-	-	L1	G4	44	-	47	J4	PH3	I/O	FT	-	ETH_MII_COL, FMC_SDNE0, LCD_R1, EVENTOUT	-
-	-	M2	H4	45	-	48	H4	PH4	I/O	FT	-	I2C2_SCL, OTG_HS_ULPI_NXT, EVENTOUT	-
-	-	L3	J4	46	-	49	J3	PH5	I/O	FT	-	I2C2_SDA, SPI5_NSS, FMC_SDNWE, EVENTOUT	-
26	37	K3	R2	47	M11	50	R2	PA3	I/O	FT	(5)	TIM2_CH4, TIM5_CH4, TIM9_CH2, USART2_RX, OTG_HS_ULPI_D0, ETH_MII_COL, LCD_B5, EVENTOUT	ADC123_ IN3
27	38	-	-		-	51	K6	V_{SS}	S	-	-	-	-

Table 10. STM32F427xx and STM32F429xx pin and ball definitions (continued)

Pin number								Pin name (function after reset)(1)	Pin type	I / O structure	Notes	Alternate functions	Additional functions
LQFP100	LQFP144	UFBGA169	UFBGA176	LQFP176	WLCSP143	LQFP208	TFBGA216						
-	-	M1	L4	48	N11	-	L5	BYPASS_ REG	I	FT	-	-	-
28	39	J11	K4	49	J8	52	K5	V_{DD}	S	-	-	-	-
29	40	N2	N4	50	M10	53	N4	PA4	I/O	TTa	(5)	SPI1_NSS, SPI3_NSS/I2S3_WS, USART2_CK, OTG_HS_SOF, DCMI_HSYNC, LCD_VSYNC, EVENTOUT	ADC12_ IN4 /DAC_ OUT1
30	41	M3	P4	51	M9	54	P4	PA5	I/O	TTa	(5)	TIM2_CH1/TIM2_ETR, TIM8_CH1N, SPI1_SCK, OTG_HS_ULPI_CK, EVENTOUT	ADC12_ IN5/DAC_ OUT2
31	42	N3	P3	52	N10	55	P3	PA6	I/O	FT	(5)	TIM1_BKIN, TIM3_CH1, TIM8_BKIN, SPI1_MISO, TIM13_CH1, DCMI_PIXCLK, LCD_G2, EVENTOUT	ADC12_ IN6
32	43	K4	R3	53	L8	56	R3	PA7	I/O	FT	(5)	TIM1_CH1N, TIM3_CH2, TIM8_CH1N, SPI1_MOSI, TIM14_CH1, ETH_MII_RX_DV/ETH_ RMII_CRS_DV, EVENTOUT	ADC12_ IN7
33	44	L4	N5	54	M8	57	N5	PC4	I/O	FT	(5)	ETH_MII_RXD0/ETH_ RMII_RXD0, EVENTOUT	ADC12_ IN14
34	45	M4	P5	55	N9	58	P5	PC5	I/O	FT	(5)	ETH_MII_RXD1/ETH_ RMII_RXD1, EVENTOUT	ADC12_ IN15
-	-	-	-	-	J7	59	L7	V_{DD}	S	-	-	-	-
-	-	-	-	-	-	60	L6	VSS	S	-	-	-	-

Table 10. STM32F427xx and STM32F429xx pin and ball definitions (continued)

Pin number								Pin name (function after reset)(1)	Pin type	I / O structure	Notes	Alternate functions	Additional functions
LQFP100	LQFP144	UFBGA169	UFBGA176	LQFP176	WLCSP143	LQFP208	TFBGA216						
35	46	N4	R5	56	N8	61	R5	PB0	I/O	FT	(5)	TIM1_CH2N, TIM3_CH3, TIM8_CH2N, LCD_R3, OTG_HS_ULPI_D1, ETH_MII_RXD2, EVENTOUT	ADC12_ IN8
36	47	K5	R4	57	K7	62	R4	PB1	I/O	FT	(5)	TIM1_CH3N, TIM3_CH4, TIM8_CH3N, LCD_R6, OTG_HS_ULPI_D2, ETH_MII_RXD3, EVENTOUT	ADC12_ IN9
37	48	L5	M6	58	L7	63	M5	PB2-BOOT1 (PB2)	I/O	FT	-	EVENTOUT	-
-	-	-	-	-	-	64	G4	PI15	I/O	FT	-	LCD_R0, EVENTOUT	-
-	-	-	-	-	-	65	R6	PJ0	I/O	FT	-	LCD_R1, EVENTOUT	-
-	-	-	-	-	-	66	R7	PJ1	I/O	FT	-	LCD_R2, EVENTOUT	-
-	-	-	-	-	-	67	P7	PJ2	I/O	FT	-	LCD_R3, EVENTOUT	-
-	-	-	-	-	-	68	N8	PJ3	I/O	FT	-	LCD_R4, EVENTOUT	-
-	-	-	-	-	-	69	M9	PJ4	I/O	FT	-	LCD_R5, EVENTOUT	-
-	49	M5	R6	59	M7	70	P8	PF11	I/O	FT	-	SPI5_MOSI, FMC_SDNRAS, DCMI_D12, EVENTOUT	-
-	50	N5	P6	60	N7	71	M6	PF12	I/O	FT	-	FMC_A6, EVENTOUT	-
-	51	G9	M8	61	-	72	K7	V_{SS}	S		-	-	-
-	52	D10	N8	62	-	73	L8	V_{DD}	S		-	-	-
-	53	M6	N6	63	K6	74	N6	PF13	I/O	FT	-	FMC_A7, EVENTOUT	-
-	54	K7	R7	64	L6	75	P6	PF14	I/O	FT	-	FMC_A8, EVENTOUT	-
-	55	L7	P7	65	M6	76	M8	PF15	I/O	FT	-	FMC_A9, EVENTOUT	-
-	56	N6	N7	66	N6	77	N7	PG0	I/O	FT	-	FMC_A10, EVENTOUT	-
-	57	M7	M7	67	K5	78	M7	PG1	I/O	FT	-	FMC_A11, EVENTOUT	-

Table 10. STM32F427xx and STM32F429xx pin and ball definitions (continued)

Pin number								Pin name (function after reset)(1)	Pin type	I / O structure	Notes	Alternate functions	Additional functions
LQFP100	LQFP144	UFBGA169	UFBGA176	LQFP176	WLCSP143	LQFP208	TFBGA216						
38	58	N7	R8	68	L5	79	R8	PE7	I/O	FT	-	TIM1_ETR, UART7_Rx, FMC_D4, EVENTOUT	-
39	59	J8	P8	69	M5	80	N9	PE8	I/O	FT	-	TIM1_CH1N, UART7_Tx, FMC_D5, EVENTOUT	-
40	60	K8	P9	70	N5	81	P9	PE9	I/O	FT	-	TIM1_CH1, FMC_D6, EVENTOUT	-
-	61	J6	M9	71	H3	82	K8	V_{SS}	S		-		-
-	62	G10	N9	72	J5	83	L9	V_{DD}	S		-		-
41	63	L8	R9	73	J4	84	R9	PE10	I/O	FT	-	TIM1_CH2N, FMC_D7, EVENTOUT	-
42	64	M8	P10	74	K4	85	P10	PE11	I/O	FT	-	TIM1_CH2, SPI4_NSS, FMC_D8, LCD_G3, EVENTOUT	-
43	65	N8	R10	75	L4	86	R10	PE12	I/O	FT	-	TIM1_CH3N, SPI4_SCK, FMC_D9, LCD_B4, EVENTOUT	-
44	66	H9	N11	76	N4	87	R12	PE13	I/O	FT	-	TIM1_CH3, SPI4_MISO, FMC_D10, LCD_DE, EVENTOUT	-
45	67	J9	P11	77	M4	88	P11	PE14	I/O	FT	-	TIM1_CH4, SPI4_MOSI, FMC_D11, LCD_CLK, EVENTOUT	-
46	68	K9	R11	78	L3	89	R11	PE15	I/O	FT	-	TIM1_BKIN, FMC_D12, LCD_R7, EVENTOUT	-
47	69	L9	R12	79	M3	90	P12	PB10	I/O	FT	-	TIM2_CH3, I2C2_SCL, SPI2_SCK/I2S2_CK, USART3_TX, OTG_HS_ULPI_D3, ETH_MII_RX_ER, LCD_G4, EVENTOUT	-
48	70	M9	R13	80	N3	91	R13	PB11	I/O	FT	-	TIM2_CH4, I2C2_SDA, USART3_RX, OTG_HS_ULPI_D4, ETH_MII_TX_EN/ETH_RMII_TX_EN, LCD_G5, EVENTOUT	-

Table 10. STM32F427xx and STM32F429xx pin and ball definitions (continued)

Pin number								Pin name (function after reset)(1)	Pin type	I / O structure	Notes	Alternate functions	Additional functions
LQFP100	LQFP144	UFBGA169	UFBGA176	LQFP176	WLCSP143	LQFP208	TFBGA216						
49	71	N9	M10	81	N2	92	L11	V_{CAP_1}	S	-	-	-	-
-	-	-	-	-	H2	93	K9	V_{SS}	S	-	-	-	-
50	72	F8	N10	82	J6	94	L10	V_{DD}	S	-	-	-	-
-	-	-	-	-	-	95	M14	PJ5	I/O	-	-	LCD_R6, EVENTOUT	-
-	-	N10	M11	83	-	96	P13	PH6	I/O	FT	-	I2C2_SMBA, SPI5_SCK, TIM12_CH1, ETH_MII_RXD2, FMC_SDNE1, DCMI_D8, EVENTOUT	-
-	-	M10	N12	84	-	97	N13	PH7	I/O	FT	-	I2C3_SCL, SPI5_MISO, ETH_MII_RXD3, FMC_SDCKE1, DCMI_D9, EVENTOUT	-
-	-	L10	M12	85	-	98	P14	PH8	I/O	FT	-	I2C3_SDA, FMC_D16, DCMI_HSYNC, LCD_R2, EVENTOUT	-
-	-	K10	M13	86	-	99	N14	PH9	I/O	FT	-	I2C3_SMBA, TIM12_CH2, FMC_D17, DCMI_D0, LCD_R3, EVENTOUT	-
-	-	N11	L13	87	-	100	P15	PH10	I/O	FT	-	TIM5_CH1, FMC_D18, DCMI_D1, LCD_R4, EVENTOUT	-
-	-	M11	L12	88	-	101	N15	PH11	I/O	FT	-	TIM5_CH2, FMC_D19, DCMI_D2, LCD_R5, EVENTOUT	-
-	-	L11	K12	89	-	102	M15	PH12	I/O	FT	-	TIM5_CH3, FMC_D20, DCMI_D3, LCD_R6, EVENTOUT	-
-	-	E7	H12	90	-	-	K10	V_{SS}	S	-	-	-	-
-	-	H8	J12	91	-	103	K11	V_{DD}	S	-	-	-	-

Table 10. STM32F427xx and STM32F429xx pin and ball definitions (continued)

Pin number								Pin name (function after reset)(1)	Pin type	I / O structure	Notes	Alternate functions	Additional functions
LQFP100	LQFP144	UFBGA169	UFBGA176	LQFP176	WLCSP143	LQFP208	TFBGA216						
51	73	N12	P12	92	M2	104	L13	PB12	I/O	FT	-	TIM1_BKIN, I2C2_SMBA, SPI2_NSS/I2S2_WS, USART3_CK, CAN2_RX, OTG_HS_ULPI_D5, ETH_MII_TXD0/ETH_RMII_TXD0, OTG_HS_ID, EVENTOUT	-
52	74	M12	P13	93	N1	105	K14	PB13	I/O	FT	-	TIM1_CH1N, SPI2_SCK/I2S2_CK, USART3_CTS, CAN2_TX, OTG_HS_ULPI_D6, ETH_MII_TXD1/ETH_RMII_TXD1, EVENTOUT	OTG_HS_VBUS
53	75	M13	R14	94	K3	106	R14	PB14	I/O	FT	-	TIM1_CH2N, TIM8_CH2N, SPI2_MISO, I2S2ext_SD, USART3_RTS, TIM12_CH1, OTG_HS_DM, EVENTOUT	-
54	76	L13	R15	95	J3	107	R15	PB15	I/O	FT	-	RTC_REFIN, TIM1_CH3N, TIM8_CH3N, SPI2_MOSI/I2S2_SD, TIM12_CH2, OTG_HS_DP, EVENTOUT	-
55	77	L12	P15	96	L2	108	L15	PD8	I/O	FT	-	USART3_TX, FMC_D13, EVENTOUT	-
56	78	K13	P14	97	M1	109	L14	PD9	I/O	FT	-	USART3_RX, FMC_D14, EVENTOUT	-
57	79	K11	N15	98	H4	110	K15	PD10	I/O	FT	-	USART3_CK, FMC_D15, LCD_B3, EVENTOUT	-

Table 10. STM32F427xx and STM32F429xx pin and ball definitions (continued)

Pin number								Pin name (function after reset)(1)	Pin type	I / O structure	Notes	Alternate functions	Additional functions
LQFP100	LQFP144	UFBGA169	UFBGA176	LQFP176	WLCSP143	LQFP208	TFBGA216						
58	80	H10	N14	99	K2	111	N10	PD11	I/O	FT	-	USART3_CTS, FMC_A16, EVENTOUT	-
59	81	J13	N13	100	H6	112	M10	PD12	I/O	FT	-	TIM4_CH1, USART3_RTS, FMC_A17, EVENTOUT	-
60	82	K12	M15	101	H5	113	M11	PD13	I/O	FT	-	TIM4_CH2, FMC_A18, EVENTOUT	-
-	83	-	-	102	-	114	J10	V_{SS}	S		-	-	-
-	84	F7	J13	103	L1	115	J11	V_{DD}	S		-	-	-
61	85	H11	M14	104	J2	116	L12	PD14	I/O	FT	-	TIM4_CH3, FMC_D0, EVENTOUT	-
62	86	J12	L14	105	K1	117	K13	PD15	I/O	FT	-	TIM4_CH4, FMC_D1, EVENTOUT	-
-	-	-	-	-	-	118	K12	PJ6	I/O	FT	-	LCD_R7, EVENTOUT	-
-	-	-	-	-	-	119	J12	PJ7	I/O	FT	-	LCD_G0, EVENTOUT	-
-	-	-	-	-	-	120	H12	PJ8	I/O	FT	-	LCD_G1, EVENTOUT	-
-	-	-	-	-	-	121	J13	PJ9	I/O	FT	-	LCD_G2, EVENTOUT	-
-	-	-	-	-	-	122	H13	PJ10	I/O	FT	-	LCD_G3, EVENTOUT	-
-	-	-	-	-	-	123	G12	PJ11	I/O	FT	-	LCD_G4, EVENTOUT	-
-	-	-	-	-	-	124	H11	VDD	I/O	FT	-	-	-
-	-	-	-	-	-	125	H10	VSS	I/O	FT	-	-	-
-	-	-	-	-	-	126	G13	PK0	I/O	FT	-	LCD_G5, EVENTOUT	-
-	-	-	-	-	-	127	F12	PK1	I/O	FT	-	LCD_G6, EVENTOUT	-
-	-	-	-	-	-	128	F13	PK2	I/O	FT	-	LCD_G7, EVENTOUT	-
-	87	H13	L15	106	J1	129	M13	PG2	I/O	FT	-	FMC_A12, EVENTOUT	-
-	88	NC (2)	K15	107	G3	130	M12	PG3	I/O	FT	-	FMC_A13, EVENTOUT	-
-	89	H12	K14	108	G5	131	N12	PG4	I/O	FT	-	FMC_A14/FMC_BA0, EVENTOUT	-
-	90	G13	K13	109	G6	132	N11	PG5	I/O	FT	-	FMC_A15/FMC_BA1, EVENTOUT	-

Table 10. STM32F427xx and STM32F429xx pin and ball definitions (continued)

Pin number								Pin name (function after reset)(1)	Pin type	I / O structure	Notes	Alternate functions	Additional functions
LQFP100	LQFP144	UFBGA169	UFBGA176	LQFP176	WLCSP143	LQFP208	TFBGA216						
-	91	G11	J15	110	G4	133	J15	PG6	I/O	FT	-	FMC_INT2, DCMI_D12, LCD_R7, EVENTOUT	-
-	92	G12	J14	111	H1	134	J14	PG7	I/O	FT	-	USART6_CK, FMC_INT3, DCMI_D13, LCD_CLK, EVENTOUT	-
-	93	F13	H14	112	G2	135	H14	PG8	I/O	FT	-	SPI6_NSS, USART6_RTS, ETH_PPS_OUT, FMC_SDCLK, EVENTOUT	-
-	94	J7	G12	113	D2	136	G10	V_{SS}	S		-	-	-
-	95	E6	H13	114	G1	137	G11	V_{DD}	S		-	-	-
63	96	F9	H15	115	F2	138	H15	PC6	I/O	FT	-	TIM3_CH1, TIM8_CH1, I2S2_MCK, USART6_TX, SDIO_D6, DCMI_D0, LCD_HSYNC, EVENTOUT	-
64	97	F10	G15	116	F3	139	G15	PC7	I/O	FT	-	TIM3_CH2, TIM8_CH2, I2S3_MCK, USART6_RX, SDIO_D7, DCMI_D1, LCD_G6, EVENTOUT	-
65	98	F11	G14	117	E4	140	G14	PC8	I/O	FT	-	TIM3_CH3, TIM8_CH3, USART6_CK, SDIO_D0, DCMI_D2, EVENTOUT	-
66	99	F12	F14	118	E3	141	F14	PC9	I/O	FT	-	MCO2, TIM3_CH4, TIM8_CH4, I2C3_SDA, I2S_CKIN, SDIO_D1, DCMI_D3, EVENTOUT	-
67	100	E13	F15	119	F1	142	F15	PA8	I/O	FT	-	MCO1, TIM1_CH1, I2C3_SCL, USART1_CK, OTG_FS_SOF, LCD_R6, EVENTOUT	-

Table 10. STM32F427xx and STM32F429xx pin and ball definitions (continued)

Pin number								Pin name (function after reset)(1)	Pin type	I / O structure	Notes	Alternate functions	Additional functions
LQFP100	LQFP144	UFBGA169	UFBGA176	LQFP176	WLCSP143	LQFP208	TFBGA216						
68	101	E8	E15	120	E2	143	E15	PA9	I/O	FT	-	TIM1_CH2, I2C3_SMBA, USART1_TX, DCMI_D0, EVENTOUT	OTG_FS_ VBUS
69	102	E9	D15	121	D5	144	D15	PA10	I/O	FT	-	TIM1_CH3, USART1_RX, OTG_FS_ID, DCMI_D1, EVENTOUT	-
70	103	E10	C15	122	D4	145	C15	PA11	I/O	FT	-	TIM1_CH4, USART1_CTS, CAN1_RX, LCD_R4, OTG_FS_DM, EVENTOUT	-
71	104	E11	B15	123	E1	146	B15	PA12	I/O	FT	-	TIM1_ETR, USART1_RTS, CAN1_TX, LCD_R5, OTG_FS_DP, EVENTOUT	-
72	105	E12	A15	124	D3	147	A15	PA13 (JTMS-SWDIO)	I/O	FT	-	JTMS-SWDIO, EVENTOUT	-
73	106	D12	F13	125	D1	148	E11	V_{CAP_2}	S		-	-	-
74	107	J10	F12	126	D2	149	F10	V_{SS}	S		-	-	-
75	108	H4	G13	127	C1	150	F11	V_{DD}	S		-	-	-
-	-	D13	E12	128	-	151	E12	PH13	I/O	FT	-	TIM8_CH1N, CAN1_TX, FMC_D21, LCD_G2, EVENTOUT	-
-	-	C13	E13	129	-	152	E13	PH14	I/O	FT	-	TIM8_CH2N, FMC_D22, DCMI_D4, LCD_G3, EVENTOUT	-
-	-	C12	D13	130	-	153	D13	PH15	I/O	FT	-	TIM8_CH3N, FMC_D23, DCMI_D11, LCD_G4, EVENTOUT	-
-	-	B13	E14	131	-	154	E14	PI0	I/O	FT	-	TIM5_CH4, SPI2_NSS/I2S2_WS(7), FMC_D24, DCMI_D13, LCD_G5, EVENTOUT	-

Table 10. STM32F427xx and STM32F429xx pin and ball definitions (continued)

Pin number								Pin name (function after reset)(1)	Pin type	I / O structure	Notes	Alternate functions	Additional functions
LQFP100	LQFP144	UFBGA169	UFBGA176	LQFP176	WLCSP143	LQFP208	TFBGA216						
-	-	C11	D14	132	-	155	D14	PI1	I/O	FT	-	SPI2_SCK/I2S2_CK(7), FMC_D25, DCMI_D8, LCD_G6, EVENTOUT	-
-	-	B12	C14	133	-	156	C14	PI2	I/O	FT	-	TIM8_CH4, SPI2_MISO, I2S2ext_SD, FMC_D26, DCMI_D9, LCD_G7, EVENTOUT	-
-	-	A12	C13	134	-	157	C13	PI3	I/O	FT	-	TIM8_ETR, SPI2_MOSI/I2S2_SD, FMC_D27, DCMI_D10, EVENTOUT	-
-	-	D11	D9	135	F5	-	F9	V_{SS}	S		-	-	-
-	-	D3	C9	136	A1	158	E10	V_{DD}	S		-	-	-
76	109	A11	A14	137	B1	159	A14	PA14 (JTCK-SWCLK)	I/O	FT	-	JTCK-SWCLK/ EVENTOUT	-
77	110	B11	A13	138	C2	160	A13	PA15 (JTDI)	I/O	FT	-	JTDI, TIM2_CH1/TIM2_ETR, SPI1_NSS, SPI3_NSS/I2S3_WS, EVENTOUT	-
78	111	C10	B14	139	A2	161	B14	PC10	I/O	FT	-	SPI3_SCK/I2S3_CK, USART3_TX, UART4_TX, SDIO_D2, DCMI_D8, LCD_R2, EVENTOUT	-
79	112	B10	B13	140	B2	162	B13	PC11	I/O	FT	-	I2S3ext_SD, SPI3_MISO, USART3_RX, UART4_RX, SDIO_D3, DCMI_D4, EVENTOUT	-
80	113	A10	A12	141	C3	163	A12	PC12	I/O	FT	-	SPI3_MOSI/I2S3_SD, USART3_CK, UART5_TX, SDIO_CK, DCMI_D9, EVENTOUT	-
81	114	D9	B12	142	B3	164	B12	PD0	I/O	FT	-	CAN1_RX, FMC_D2, EVENTOUT	-

Table 10. STM32F427xx and STM32F429xx pin and ball definitions (continued)

Pin number								Pin name (function after reset)(1)	Pin type	I / O structure	Notes	Alternate functions	Additional functions
LQFP100	LQFP144	UFBGA169	UFBGA176	LQFP176	WLCSP143	LQFP208	TFBGA216						
82	115	C9	C12	143	C4	165	C12	PD1	I/O	FT	-	CAN1_TX, FMC_D3, EVENTOUT	-
83	116	B9	D12	144	A3	166	D12	PD2	I/O	FT	-	TIM3_ETR, UART5_RX, SDIO_CMD, DCMI_D11, EVENTOUT	-
84	117	A9	D11	145	B4	167	C11	PD3	I/O	FT	-	SPI2_SCK/I2S2_CK, USART2_CTS, FMC_CLK, DCMI_D5, LCD_G7, EVENTOUT	-
85	118	D8	D10	146	B5	168	D11	PD4	I/O	FT	-	USART2_RTS, FMC_NOE, EVENTOUT	-
86	119	C8	C11	147	A4	169	C10	PD5	I/O	FT	-	USART2_TX, FMC_NWE, EVENTOUT	-
-	120	-	D8	148	-	170	F8	V_{SS}	S		-	-	-
-	121	D6	C8	149	C5	171	E9	V_{DD}	S		-	-	-
87	122	B8	B11	150	F4	172	B11	PD6	I/O	FT	-	SPI3_MOSI/I2S3_SD, SAI1_SD_A, USART2_RX, FMC_NWAIT, DCMI_D10, LCD_B2, EVENTOUT	-
88	123	A8	A11	151	A5	173	A11	PD7	I/O	FT	-	USART2_CK, FMC_NE1/FMC_NCE2, EVENTOUT	-
-	-	-	-	-	-	174	B10	PJ12	I/O	FT	-	LCD_B0, EVENTOUT	-
-	-	-	-	-	-	175	B9	PJ13	I/O	FT	-	LCD_B1, EVENTOUT	-
-	-	-	-	-	-	176	C9	PJ14	I/O	FT	-	LCD_B2, EVENTOUT	-
-	-	-	-	-	-	177	D10	PJ15	I/O	FT	-	LCD_B3, EVENTOUT	-
-	124	NC (2)	C10	152	E5	178	D9	PG9	I/O	FT	-	USART6_RX, FMC_NE2/FMC_NCE3, DCMI_VSYNC(8), EVENTOUT	-

Table 10. STM32F427xx and STM32F429xx pin and ball definitions (continued)

Pin number								Pin name (function after reset)(1)	Pin type	I / O structure	Notes	Alternate functions	Additional functions
LQFP100	LQFP144	UFBGA169	UFBGA176	LQFP176	WLCSP143	LQFP208	TFBGA216						
-	125	C7	B10	153	C6	179	C8	PG10	I/O	FT	-	LCD_G3, FMC_NCE4_1/FMC_NE3, DCMI_D2, LCD_B2, EVENTOUT	-
-	126	B7	B9	154	B6	180	B8	PG11	I/O	FT	-	ETH_MII_TX_EN/ETH_RMII_TX_EN, FMC_NCE4_2, DCMI_D3, LCD_B3, EVENTOUT	-
-	127	A7	B8	155	A6	181	C7	PG12	I/O	FT	-	SPI6_MISO, USART6_RTS, LCD_B4, FMC_NE4, LCD_B1, EVENTOUT	-
-	128	NC (2)	A8	156	D6	182	B3	PG13	I/O	FT	-	SPI6_SCK, USART6_CTS, ETH_MII_TXD0/ETH_RMII_TXD0, FMC_A24, EVENTOUT	-
-	129	NC (2)	A7	157	F6	183	A4	PG14	I/O	FT	-	SPI6_MOSI, USART6_TX, ETH_MII_TXD1/ETH_RMII_TXD1, FMC_A25, EVENTOUT	-
-	130	D7	D7	158	-	184	F7	V_{SS}	S		-	-	-
-	131	L6	C7	159	E6	185	E8	V_{DD}	S		-	-	-
-	-	-	-	-	-	186	D8	PK3	I/O	FT	-	LCD_B4, EVENTOUT	-
-	-	-	-	-	-	187	D7	PK4	I/O	FT	-	LCD_B5, EVENTOUT	-
-	-	-	-	-	-	188	C6	PK5	I/O	FT	-	LCD_B6, EVENTOUT	-
-	-	-	-	-	-	189	C5	PK6	I/O	FT	-	LCD_B7, EVENTOUT	-
-	-	-	-	-	-	190	C4	PK7	I/O	FT	-	LCD_DE, EVENTOUT	-
-	132	C6	B7	160	A7	191	B7	PG15	I/O	FT	-	USART6_CTS, FMC_SDNCAS, DCMI_D13, EVENTOUT	-

Table 10. STM32F427xx and STM32F429xx pin and ball definitions (continued)

Pin number								Pin name (function after reset)(1)	Pin type	I / O structure	Notes	Alternate functions	Additional functions
LQFP100	LQFP144	UFBGA169	UFBGA176	LQFP176	WLCSP143	LQFP208	TFBGA216						
89	133	B6	A10	161	B7	192	A10	PB3 (JTDO/TRACE SWO)	I/O	FT	-	JTDO/TRACESWO, TIM2_CH2, SPI1_SCK, SPI3_SCK/I2S3_CK, EVENTOUT	-
90	134	A6	A9	162	C7	193	A9	PB4 (NJTRST)	I/O	FT	-	NJTRST, TIM3_CH1, SPI1_MISO, SPI3_MISO, I2S3ext_SD, EVENTOUT	-
91	135	D5	A6	163	C8	194	A8	PB5	I/O	FT	-	TIM3_CH2, I2C1_SMBA, SPI1_MOSI, SPI3_MOSI/I2S3_SD, CAN2_RX, OTG_HS_ULPI_D7, ETH_PPS_OUT, FMC_SDCKE1, DCMI_D10, EVENTOUT	-
92	136	C5	B6	164	A8	195	B6	PB6	I/O	FT	-	TIM4_CH1, I2C1_SCL, USART1_TX, CAN2_TX, FMC_SDNE1, DCMI_D5, EVENTOUT	-
93	137	B5	B5	165	B8	196	B5	PB7	I/O	FT	-	TIM4_CH2, I2C1_SDA, USART1_RX, FMC_NL, DCMI_VSYNC, EVENTOUT	-
94	138	A5	D6	166	C9	197	E6	BOOT0	I	B	-		V_{PP}
95	139	D4	A5	167	A9	198	A7	PB8	I/O	FT	-	TIM4_CH3, TIM10_CH1, I2C1_SCL, CAN1_RX, ETH_MII_TXD3, SDIO_D4, DCMI_D6, LCD_B6, EVENTOUT	-

Table 10. STM32F427xx and STM32F429xx pin and ball definitions (continued)

Pin number								Pin name (function after reset)(1)	Pin type	I / O structure	Notes	Alternate functions	Additional functions
LQFP100	LQFP144	UFBGA169	UFBGA176	LQFP176	WLCSP143	LQFP208	TFBGA216						
96	140	C4	B4	168	B9	199	B4	PB9	I/O	FT	-	TIM4_CH4, TIM11_CH1, I2C1_SDA, SPI2_NSS/I2S2_WS, CAN1_TX, SDIO_D5, DCMI_D7, LCD_B7, EVENTOUT	-
97	141	B4	A4	169	B10	200	A6	PE0	I/O	FT	-	TIM4_ETR, UART8_RX, FMC_NBL0, DCMI_D2, EVENTOUT	-
98	142	A4	A3	170	A10	201	A5	PE1	I/O	FT	-	UART8_Tx, FMC_NBL1, DCMI_D3, EVENTOUT	-
99	-	F5	D5	-	-	202	F6	V_{SS}	S		-		-
-	143	C3	C6	171	A11	203	E5	PDR_ON	S		-		-
100	144	K6	C5	172	D7	204	E7	V_{DD}	S		-		-
-	-	B3	D4	173	-	205	C3	PI4	I/O	FT	-	TIM8_BKIN, FMC_NBL2, DCMI_D5, LCD_B4, EVENTOUT	-
-	-	A3	C4	174	-	206	D3	PI5	I/O	FT	-	TIM8_CH1, FMC_NBL3, DCMI_VSYNC, LCD_B5, EVENTOUT	-
-	-	A2	C3	175	-	207	D6	PI6	I/O	FT	-	TIM8_CH2, FMC_D28, DCMI_D6, LCD_B6, EVENTOUT	-
-	-	B1	C2	176	-	208	D4	PI7	I/O	FT	-	TIM8_CH3, FMC_D29, DCMI_D7, LCD_B7, EVENTOUT	-

1. Function availability depends on the chosen device.
2. NC (not-connected) pins are not bonded. They must be configured by software to output push-pull and forced to 0 in the output data register to avoid extra current consumption in low power modes.
3. PC13, PC14, PC15 and PI8 are supplied through the power switch. Since the switch only sinks a limited amount of current (3 mA), the use of GPIOs PC13 to PC15 and PI8 in output mode is limited:
   - The speed should not exceed 2 MHz with a maximum load of 30 pF.
   - These I/Os must not be used as a current source (e.g. to drive an LED).

4. Main function after the first backup domain power-up. Later on, it depends on the contents of the RTC registers even after reset (because these registers are not reset by the main reset). For details on how to manage these I/Os, refer to the RTC register description sections in the STM32F4xx reference manual, available from the STMicroelectronics website: *www.st.com*.
5. FT = 5 V tolerant except when in analog mode or oscillator mode (for PC14, PC15, PH0 and PH1).
6. If the device is delivered in an WLCSP143, UFBGA169, UFBGA176, LQFP176 or TFBGA216 package, and the BYPASS_REG pin is set to V_{DD} (Regulator OFF/internal reset ON mode), then PA0 is used as an internal Reset (active low).
7. PI0 and PI1 cannot be used for I2S2 full-duplex mode.
8. The DCMI_VSYNC alternate function on PG9 is only available on silicon revision 3.

Table 11. FMC pin definition

Pin name	CF	NOR/PSRAM/ SRAM	NOR/PSRAM Mux	NAND16	SDRAM
PF0	A0	A0			A0
PF1	A1	A1			A1
PF2	A2	A2			A2
PF3	A3	A3			A3
PF4	A4	A4			A4
PF5	A5	A5			A5
PF12	A6	A6			A6
PF13	A7	A7			A7
PF14	A8	A8			A8
PF15	A9	A9			A9
PG0	A10	A10			A10
PG1		A11			A11
PG2		A12			A12
PG3		A13			
PG4		A14			BA0
PG5		A15			BA1
PD11		A16	A16	CLE	
PD12		A17	A17	ALE	
PD13		A18	A18		
PE3		A19	A19		
PE4		A20	A20		
PE5		A21	A21		
PE6		A22	A22		
PE2		A23	A23		
PG13		A24	A24		
PG14		A25	A25		
PD14	D0	D0	DA0	D0	D0
PD15	D1	D1	DA1	D1	D1
PD0	D2	D2	DA2	D2	D2
PD1	D3	D3	DA3	D3	D3
PE7	D4	D4	DA4	D4	D4
PE8	D5	D5	DA5	D5	D5
PE9	D6	D6	DA6	D6	D6
PE10	D7	D7	DA7	D7	D7

Table 11. FMC pin definition (continued)

Pin name	CF	NOR/PSRAM/ SRAM	NOR/PSRAM Mux	NAND16	SDRAM
PE11	D8	D8	DA8	D8	D8
PE12	D9	D9	DA9	D9	D9
PE13	D10	D10	DA10	D10	D10
PE14	D11	D11	DA11	D11	D11
PE15	D12	D12	DA12	D12	D12
PD8	D13	D13	DA13	D13	D13
PD9	D14	D14	DA14	D14	D14
PD10	D15	D15	DA15	D15	D15
PH8		D16			D16
PH9		D17			D17
PH10		D18			D18
PH11		D19			D19
PH12		D20			D20
PH13		D21			D21
PH14		D22			D22
PH15		D23			D23
PI0		D24			D24
PI1		D25			D25
PI2		D26			D26
PI3		D27			D27
PI6		D28			D28
PI7		D29			D29
PI9		D30			D30
PI10		D31			D31
PD7		NE1	NE1	NCE2	
PG9		NE2	NE2	NCE3	
PG10	NCE4_1	NE3	NE3		
PG11	NCE4_2				
PG12		NE4	NE4		
PD3		CLK	CLK		
PD4	NOE	NOE	NOE	NOE	
PD5	NWE	NWE	NWE	NWE	
PD6	NWAIT	NWAIT	NWAIT	NWAIT	
PB7		NL(NADV)	NL(NADV)		

Table 11. FMC pin definition (continued)

Pin name	CF	NOR/PSRAM/ SRAM	NOR/PSRAM Mux	NAND16	SDRAM
PF6	NIORD				
PF7	NREG				
PF8	NIOWR				
PF9	CD				
PF10	INTR				
PG6				INT2	
PG7				INT3	
PE0		NBL0	NBL0		NBL0
PE1		NBL1	NBL1		NBL1
PI4		NBL2			NBL2
PI5		NBL3			NBL3
PG8					SDCLK
PC0					SDNWE
PF11					SDNRAS
PG15					SDNCAS
PH2					SDCKE0
PH3					SDNE0
PH6					SDNE1
PH7					SDCKE1
PH5					SDNWE
PC2					SDNE0
PC3					SDCKE0
PB5					SDCKE1
PB6					SDNE1

Table 12. STM32F427xx and STM32F429xx alternate function mapping

Port		AF0	AF1	AF2	AF3	AF4	AF5	AF6	AF7	AF8	AF9	AF10	AF11	AF12	AF13	AF14	AF15
		SYS	TIM1/2	TIM3/4/5	TIM8/9/10/11	I2C1/2/3	SPI1/2/3/4/5/6	SPI2/3/SAI1	SPI3/USART1/2/3	USART6/UART4/5/7/8	CAN1/2/TIM12/13/14/LCD	OTG2_HS/OTG1_FS	ETH	FMC/SDIO/OTG2_FS	DCMI	LCD	SYS
Port A	PA0	-	TIM2_CH1/TIM2_ETR	TIM5_CH1	TIM8_ETR	-	-	-	USART2_CTS	UART4_TX	-	-	ETH_MII_CRS	-	-	-	EVENTOUT
	PA1	-	TIM2_CH2	TIM5_CH2	-	-	-	-	USART2_RTS	UART4_RX	-	-	ETH_MII_RX_CLK/ETH_RMII_REF_CLK	-	-	-	EVENTOUT
	PA2	-	TIM2_CH3	TIM5_CH3	TIM9_CH1	-	-	-	USART2_TX	-	-	-	ETH_MDIO	-	-	-	EVENTOUT
	PA3	-	TIM2_CH4	TIM5_CH4	TIM9_CH2	-	-	-	USART2_RX	-	-	OTG_HS_ULPI_D0	ETH_MII_COL	-	-	LCD_B5	EVENTOUT
	PA4	-	-	-	-	-	SPI1_NSS	SPI3_NSS/I2S3_WS	USART2_CK	-	-	-	-	OTG_HS_SOF	DCMI_HSYNC	LCD_VSYNC	EVENTOUT
	PA5	-	TIM2_CH1/TIM2_ETR	-	TIM8_CH1N	-	SPI1_SCK	-	-	-	-	OTG_HS_ULPI_CK	-	-	-	-	EVENTOUT
	PA6	-	TIM1_BKIN	TIM3_CH1	TIM8_BKIN	-	SPI1_MISO	-	-	-	TIM13_CH1	-	-	-	DCMI_PIXCLK	LCD_G2	EVENTOUT
	PA7	-	TIM1_CH1N	TIM3_CH2	TIM8_CH1N	-	SPI1_MOSI	-	-	-	TIM14_CH1	-	ETH_MII_RX_DV/ETH_RMII_CRS_DV	-	-	-	EVENTOUT
	PA8	MCO1	TIM1_CH1	-	-	I2C3_SCL	-	-	USART1_CK	-	-	OTG_FS_SOF	-	-	-	LCD_R6	EVENTOUT
	PA9	-	TIM1_CH2	-	-	I2C3_SMBA	-	-	USART1_TX	-	-	-	-	-	DCMI_D0	-	EVENTOUT
	PA10	-	TIM1_CH3	-	-	-	-	-	USART1_RX	-	-	OTG_FS_ID	-	-	DCMI_D1	-	EVENTOUT
	PA11	-	TIM1_CH4	-	-	-	-	-	USART1_CTS	-	CAN1_RX	OTG_FS_DM	-	-	-	LCD_R4	EVENTOUT
	PA12	-	TIM1_ETR	-	-	-	-	-	USART1_RTS	-	CAN1_TX	OTG_FS_DP	-	-	-	LCD_R5	EVENTOUT

Table 12. STM32F427xx and STM32F429xx alternate function mapping (continued)

Port		AF0	AF1	AF2	AF3	AF4	AF5	AF6	AF7	AF8	AF9	AF10	AF11	AF12	AF13	AF14	AF15
		SYS	TIM1/2	TIM3/4/5	TIM8/9/10/11	I2C1/2/3	SPI1/2/3/4/5/6	SPI2/3/SAI1	SPI3/USART1/2/3	USART6/UART4/5/7/8	CAN1/2/TIM12/13/14/LCD	OTG2_HS/OTG1_FS	ETH	FMC/SDIO/OTG2_FS	DCMI	LCD	SYS
Port A	PA13	JTMS-SWDIO	-	-	-	-	-	-	-	-	-	-	-	-	-	-	EVENTOUT
	PA14	JTCK-SWCLK	-	-	-	-	-	-	-	-	-	-	-	-	-	-	EVENTOUT
	PA15	JTDI	TIM2_CH1/TIM2_ETR	-	-	-	SPI1_NSS	SPI3_NSS/I2S3_WS	-	-	-	-	-	-	-	-	EVENTOUT
Port B	PB0	-	TIM1_CH2N	TIM3_CH3	TIM8_CH2N	-	-	-	-	-	LCD_R3	OTG_HS_ULPI_D1	ETH_MII_RXD2	-	-	-	EVENTOUT
	PB1	-	TIM1_CH3N	TIM3_CH4	TIM8_CH3N	-	-	-	-	-	LCD_R6	OTG_HS_ULPI_D2	ETH_MII_RXD3	-	-	-	EVENTOUT
	PB2	-	-	-	-	-	-	-	-	-	-	-	-	-	-	-	EVENTOUT
	PB3	JTDO/TRACESWO	TIM2_CH2	-	-	-	SPI1_SCK	SPI3_SCK/I2S3_CK	-	-	-	-	-	-	-	-	EVENTOUT
	PB4	NJTRST	-	TIM3_CH1	-	-	SPI1_MISO	SPI3_MISO	I2S3ext_SD	-	-	-	-	-	-	-	EVENTOUT
	PB5	-	-	TIM3_CH2	-	I2C1_SMBA	SPI1_MOSI	SPI3_MOSI/I2S3_SD	-	-	CAN2_RX	OTG_HS_ULPI_D7	ETH_PPS_OUT	FMC_SDCKE1	DCMI_D10	-	EVENTOUT
	PB6	-	-	TIM4_CH1	-	I2C1_SCL	-	-	USART1_TX	-	CAN2_TX	-	-	FMC_SDNE1	DCMI_D5	-	EVENTOUT
	PB7	-	-	TIM4_CH2	-	I2C1_SDA	-	-	USART1_RX	-	-	-	-	FMC_NL	DCMI_VSYNC	-	EVENTOUT
	PB8	-	-	TIM4_CH3	TIM10_CH1	I2C1_SCL	-	-	-	-	CAN1_RX	-	ETH_MII_TXD3	SDIO_D4	DCMI_D6	LCD_B6	EVENTOUT
	PB9	-	-	TIM4_CH4	TIM11_CH1	I2C1_SDA	SPI2_NSS/I2S2_WS	-	-	-	CAN1_TX	-	-	SDIO_D5	DCMI_D7	LCD_B7	EVENTOUT
	PB10	-	TIM2_CH3	-	-	I2C2_SCL	SPI2_SCK/I2S2_CK	-	USART3_TX	-	-	OTG_HS_ULPI_D3	ETH_MII_RX_ER	-	-	LCD_G4	EVENTOUT

Table 12. STM32F427xx and STM32F429xx alternate function mapping (continued)

Port		AF0	AF1	AF2	AF3	AF4	AF5	AF6	AF7	AF8	AF9	AF10	AF11	AF12	AF13	AF14	AF15
		SYS	TIM1/2	TIM3/4/5	TIM8/9/10/11	I2C1/2/3	SPI1/2/3/4/5/6	SPI2/3/SAI1	SPI3/USART1/2/3	USART6/UART4/5/7/8	CAN1/2/TIM12/13/14/LCD	OTG2_HS/OTG1_FS	ETH	FMC/SDIO/OTG2_FS	DCMI	LCD	SYS
Port B	PB11	-	TIM2_CH4	-	-	I2C2_SDA	-	-	USART3_RX	-	-	OTG_HS_ULPI_D4	ETH_MII_TX_EN/ETH_RMII_TX_EN	-	-	LCD_G5	EVENTOUT
	PB12	-	TIM1_BKIN	-	-	I2C2_SMBA	SPI2_NSS/I2S2_WS	-	USART3_CK	-	CAN2_RX	OTG_HS_ULPI_D5	ETH_MII_TXD0/ETH_RMII_TXD0	OTG_HS_ID	-	-	EVENTOUT
	PB13	-	TIM1_CH1N	-	-	-	SPI2_SCK/I2S2_CK	-	USART3_CTS	-	CAN2_TX	OTG_HS_ULPI_D6	ETH_MII_TXD1/ETH_RMII_TXD1	-	-	-	EVENTOUT
	PB14	-	TIM1_CH2N	-	TIM8_CH2N	-	SPI2_MISO	I2S2ext_SD	USART3_RTS	-	TIM12_CH1	-	-	OTG_HS_DM	-	-	EVENTOUT
	PB15	RTC_REFIN	TIM1_CH3N	-	TIM8_CH3N	-	SPI2_MOSI/I2S2_SD	-	-	-	TIM12_CH2	-	-	OTG_HS_DP	-	-	EVENTOUT
Port C	PC0	-	-	-	-	-	-	-	-	-	-	OTG_HS_ULPI_STP	-	FMC_SDNWE	-	-	EVENTOUT
	PC1	-	-	-	-	-	-	-	-	-	-	-	ETH_MDC	-	-	-	EVENTOUT
	PC2	-	-	-	-	-	SPI2_MISO	I2S2ext_SD	-	-	-	OTG_HS_ULPI_DIR	ETH_MII_TXD2	FMC_SDNE0	-	-	EVENTOUT
	PC3	-	-	-	-	-	SPI2_MOSI/I2S2_SD	-	-	-	-	OTG_HS_ULPI_NXT	ETH_MII_TX_CLK	FMC_SDCKE0	-	-	EVENTOUT
	PC4	-	-	-	-	-	-	-	-	-	-	-	ETH_MII_RXD0/ETH_RMII_RXD0	-	-	-	EVENTOUT
	PC5	-	-	-	-	-	-	-	-	-	-	-	ETH_MII_RXD1/ETH_RMII_RXD1	-	-	-	EVENTOUT
	PC6	-	-	TIM3_CH1	TIM8_CH1	-	I2S2_MCK	-	-	USART6_TX	-	-	-	SDIO_D6	DCMI_D0	LCD_HSYNC	EVENTOUT
	PC7	-	-	TIM3_CH2	TIM8_CH2	-	-	I2S3_MCK	-	USART6_RX	-	-	-	SDIO_D7	DCMI_D1	LCD_G6	EVENTOUT

Table 12. STM32F427xx and STM32F429xx alternate function mapping (continued)

Port		AF0	AF1	AF2	AF3	AF4	AF5	AF6	AF7	AF8	AF9	AF10	AF11	AF12	AF13	AF14	AF15
		SYS	TIM1/2	TIM3/4/5	TIM8/9/10/11	I2C1/2/3	SPI1/2/3/4/5/6	SPI2/3/SAI1	SPI3/USART1/2/3	USART6/UART4/5/7/8	CAN1/2/TIM12/13/14/LCD	OTG2_HS/OTG1_FS	ETH	FMC/SDIO/OTG2_FS	DCMI	LCD	SYS
Port C	PC8	-	-	TIM3_CH3	TIM8_CH3	-	-	-	-	USART6_CK	-	-	-	SDIO_D0	DCMI_D2	-	EVENTOUT
	PC9	MCO2	-	TIM3_CH4	TIM8_CH4	I2C3_SDA	I2S_CKIN	-	-	-	-	-	-	SDIO_D1	DCMI_D3	-	EVENTOUT
	PC10	-	-	-	-	-	-	SPI3_SCK/I2S3_CK	USART3_TX	UART4_TX	-	-	-	SDIO_D2	DCMI_D8	LCD_R2	EVENTOUT
	PC11	-	-	-	-	-	I2S3ext_SD	SPI3_MISO	USART3_RX	UART4_RX	-	-	-	SDIO_D3	DCMI_D4	-	EVENTOUT
	PC12	-	-	-	-	-	-	SPI3_MOSI/I2S3_SD	USART3_CK	UART5_TX	-	-	-	SDIO_CK	DCMI_D9	-	EVENTOUT
	PC13	-	-	-	-	-	-	-	-	-	-	-	-	-	-	-	EVENTOUT
	PC14	-	-	-	-	-	-	-	-	-	-	-	-	-	-	-	EVENTOUT
	PC15	-	-	-	-	-	-	-	-	-	-	-	-	-	-	-	EVENTOUT
Port D	PD0	-	-	-	-	-	-	-	-	-	CAN1_RX	-	-	FMC_D2	-	-	EVENTOUT
	PD1	-	-	-	-	-	-	-	-	-	CAN1_TX	-	-	FMC_D3	-	-	EVENTOUT
	PD2	-	-	TIM3_ETR	-	-	-	-	-	UART5_RX	-	-	-	SDIO_CMD	DCMI_D11	-	EVENTOUT
	PD3	-	-	-	-	-	SPI2_SCK/I2S2_CK	-	USART2_CTS	-	-	-	-	FMC_CLK	DCMI_D5	LCD_G7	EVENTOUT
	PD4	-	-	-	-	-	-	-	USART2_RTS	-	-	-	-	FMC_NOE	-	-	EVENTOUT
	PD5	-	-	-	-	-	-	-	USART2_TX	-	-	-	-	FMC_NWE	-	-	EVENTOUT
	PD6	-	-	-	-	-	SPI3_MOSI/I2S3_SD	SAI1_SD_A	USART2_RX	-	-	-	-	FMC_NWAIT	DCMI_D10	LCD_B2	EVENTOUT

Table 12. STM32F427xx and STM32F429xx alternate function mapping (continued)

Port		AF0	AF1	AF2	AF3	AF4	AF5	AF6	AF7	AF8	AF9	AF10	AF11	AF12	AF13	AF14	AF15
		SYS	TIM1/2	TIM3/4/5	TIM8/9/10/11	I2C1/2/3	SPI1/2/3/4/5/6	SPI2/3/SAI1	SPI3/USART1/2/3	USART6/UART4/5/7/8	CAN1/2/TIM12/13/14/LCD	OTG2_HS/OTG1_FS	ETH	FMC/SDIO/OTG2_FS	DCMI	LCD	SYS
Port D	PD7	-	-	-	-	-	-	-	USART2_CK	-	-	-	-	FMC_NE1/FMC_NCE2	-	-	EVENTOUT
	PD8	-	-	-	-	-	-	-	USART3_TX	-	-	-	-	FMC_D13	-	-	EVENTOUT
	PD9	-	-	-	-	-	-	-	USART3_RX	-	-	-	-	FMC_D14	-	-	EVENTOUT
	PD10	-	-	-	-	-	-	-	USART3_CK	-	-	-	-	FMC_D15	-	LCD_B3	EVENTOUT
	PD11	-	-	-	-	-	-	-	USART3_CTS	-	-	-	-	FMC_A16	-	-	EVENTOUT
	PD12	-	-	TIM4_CH1	-	-	-	-	USART3_RTS	-	-	-	-	FMC_A17	-	-	EVENTOUT
	PD13	-	-	TIM4_CH2	-	-	-	-	-	-	-	-	-	FMC_A18	-	-	EVENTOUT
	PD14	-	-	TIM4_CH3	-	-	-	-	-	-	-	-	-	FMC_D0	-	-	EVENTOUT
	PD15	-	-	TIM4_CH4	-	-	-	-	-	-	-	-	-	FMC_D1	-	-	EVENTOUT
Port E	PE0	-	-	TIM4_ETR	-	-	-	-	-	UART8_Rx	-	-	-	FMC_NBL0	DCMI_D2	-	EVENTOUT
	PE1	-	-	-	-	-	-	-	-	UART8_Tx	-	-	-	FMC_NBL1	DCMI_D3	-	EVENTOUT
	PE2	TRACECLK	-	-	-	-	SPI4_SCK	SAI1_MCLK_A	-	-	-	-	ETH_MII_TXD3	FMC_A23	-	-	EVENTOUT
	PE3	TRACED0	-	-	-	-	-	SAI1_SD_B	-	-	-	-	-	FMC_A19	-	-	EVENTOUT
	PE4	TRACED1	-	-	-	-	SPI4_NSS	SAI1_FS_A	-	-	-	-	-	FMC_A20	DCMI_D4	LCD_B0	EVENTOUT
	PE5	TRACED2	-	-	TIM9_CH1	-	SPI4_MISO	SAI1_SCK_A	-	-	-	-	-	FMC_A21	DCMI_D6	LCD_G0	EVENTOUT
	PE6	TRACED3	-	-	TIM9_CH2	-	SPI4_MOSI	SAI1_SD_A	-	-	-	-	-	FMC_A22	DCMI_D7	LCD_G1	EVENTOUT

Table 12. STM32F427xx and STM32F429xx alternate function mapping (continued)

Port		AF0	AF1	AF2	AF3	AF4	AF5	AF6	AF7	AF8	AF9	AF10	AF11	AF12	AF13	AF14	AF15
		SYS	TIM1/2	TIM3/4/5	TIM8/9/10/11	I2C1/2/3	SPI1/2/3/4/5/6	SPI2/3/SAI1	SPI3/USART1/2/3	USART6/UART4/5/7/8	CAN1/2/TIM12/13/14/LCD	OTG2_HS/OTG1_FS	ETH	FMC/SDIO/OTG2_FS	DCMI	LCD	SYS
Port E	PE7	-	TIM1_ETR	-	-	-	-	-	-	UART7_Rx	-	-	-	FMC_D4	-	-	EVENTOUT
	PE8	-	TIM1_CH1N	-	-	-	-	-	-	UART7_Tx	-	-	-	FMC_D5	-	-	EVENTOUT
	PE9	-	TIM1_CH1	-	-	-	-	-	-	-	-	-	-	FMC_D6	-	-	EVENTOUT
	PE10	-	TIM1_CH2N	-	-	-	-	-	-	-	-	-	-	FMC_D7	-	-	EVENTOUT
	PE11	-	TIM1_CH2	-	-	-	SPI4_NSS	-	-	-	-	-	-	FMC_D8	-	LCD_G3	EVENTOUT
	PE12	-	TIM1_CH3N	-	-	-	SPI4_SCK	-	-	-	-	-	-	FMC_D9	-	LCD_B4	EVENTOUT
	PE13	-	TIM1_CH3	-	-	-	SPI4_MISO	-	-	-	-	-	-	FMC_D10	-	LCD_DE	EVENTOUT
	PE14	-	TIM1_CH4	-	-	-	SPI4_MOSI	-	-	-	-	-	-	FMC_D11	-	LCD_CLK	EVENTOUT
	PE15	-	TIM1_BKIN	-	-	-		-	-	-	-	-	-	FMC_D12	-	LCD_R7	EVENTOUT
Port F	PF0	-	-	-	-	I2C2_SDA	-	-	-	-	-	-	-	FMC_A0	-	-	EVENTOUT
	PF1	-				I2C2_SCL	-	-	-	-	-	-	-	FMC_A1	-	-	EVENTOUT
	PF2	-	-	-	-	I2C2_SMBA	-	-	-	-	-	-	-	FMC_A2	-	-	EVENTOUT
	PF3	-	-	-	-		-	-	-	-	-	-	-	FMC_A3	-	-	EVENTOUT
	PF4	-	-	-	-		-	-	-	-	-	-	-	FMC_A4	-	-	EVENTOUT
	PF5	-	-	-	-		-	-	-	-	-	-	-	FMC_A5	-	-	EVENTOUT
	PF6	-	-	-	TIM10_CH1	-	SPI5_NSS	SAI1_SD_B	-	UART7_Rx	-	-	-	FMC_NIORD	-	-	EVENTOUT
	PF7	-	-	-	TIM11_CH1	-	SPI5_SCK	SAI1_MCLK_B	-	UART7_Tx	-	-	-	FMC_NREG	-	-	EVENTOUT

Table 12. STM32F427xx and STM32F429xx alternate function mapping (continued)

Port		AF0	AF1	AF2	AF3	AF4	AF5	AF6	AF7	AF8	AF9	AF10	AF11	AF12	AF13	AF14	AF15
		SYS	TIM1/2	TIM3/4/5	TIM8/9/10/11	I2C1/2/3	SPI1/2/3/4/5/6	SPI2/3/SAI1	SPI3/USART1/2/3	USART6/UART4/5/7/8	CAN1/2/TIM12/13/14/LCD	OTG2_HS/OTG1_FS	ETH	FMC/SDIO/OTG2_FS	DCMI	LCD	SYS
Port F	PF8	-	-	-	-	-	SPI5_MISO	SAI1_SCK_B	-	-	TIM13_CH1	-	-	FMC_NIOWR	-	-	EVENTOUT
	PF9	-	-	-	-	-	SPI5_MOSI	SAI1_FS_B	-	-	TIM14_CH1	-	-	FMC_CD	-	-	EVENTOUT
	PF10	-	-	-	-	-	-	-	-	-	-	-	-	FMC_INTR	DCMI_D11	LCD_DE	EVENTOUT
	PF11	-	-	-	-	-	SPI5_MOSI	-	-	-	-	-	-	FMC_SDNRAS	DCMI_D12	-	EVENTOUT
	PF12	-	-	-	-	-	-	-	-	-	-	-	-	FMC_A6	-	-	EVENTOUT
	PF13	-	-	-	-	-	-	-	-	-	-	-	-	FMC_A7	-	-	EVENTOUT
	PF14	-	-	-	-	-	-	-	-	-	-	-	-	FMC_A8	-	-	EVENTOUT
	PF15	-	-	-	-	-	-	-	-	-	-	-	-	FMC_A9	-	-	EVENTOUT
Port G	PG0	-	-	-	-	-	-	-	-	-	-	-	-	FMC_A10	-	-	EVENTOUT
	PG1	-	-	-	-	-	-	-	-	-	-	-	-	FMC_A11	-	-	EVENTOUT
	PG2	-	-	-	-	-	-	-	-	-	-	-	-	FMC_A12	-	-	EVENTOUT
	PG3	-	-	-	-	-	-	-	-	-	-	-	-	FMC_A13	-	-	EVENTOUT
	PG4	-	-	-	-	-	-	-	-	-	-	-	-	FMC_A14/FMC_BA0	-	-	EVENTOUT
	PG5	-	-	-	-	-	-	-	-	-	-	-	-	FMC_A15/FMC_BA1	-	-	EVENTOUT
	PG6	-	-	-	-	-	-	-	-	-	-	-	-	FMC_INT2	DCMI_D12	LCD_R7	EVENTOUT
	PG7	-	-	-	-	-	-	-	-	USART6_CK	-	-	-	FMC_INT3	DCMI_D13	LCD_CLK	EVENTOUT
	PG8	-	-	-	-	-	SPI6_NSS	-	-	USART6_RTS	-	-	ETH_PPS_OUT	FMC_SDCLK	-	-	EVENTOUT

Table 12. STM32F427xx and STM32F429xx alternate function mapping (continued)

Port		AF0	AF1	AF2	AF3	AF4	AF5	AF6	AF7	AF8	AF9	AF10	AF11	AF12	AF13	AF14	AF15
		SYS	TIM1/2	TIM3/4/5	TIM8/9/10/11	I2C1/2/3	SPI1/2/3/4/5/6	SPI2/3/SAI1	SPI3/USART1/2/3	USART6/UART4/5/7/8	CAN1/2/TIM12/13/14/LCD	OTG2_HS/OTG1_FS	ETH	FMC/SDIO/OTG2_FS	DCMI	LCD	SYS
Port G	PG9	-	-	-	-	-	-	-	-	USART6_RX	-	-	-	FMC_NE2/FMC_NCE3	DCMI_VSYNC (1)	-	EVENTOUT
	PG10	-	-	-	-	-	-	-	-	-	LCD_G3	-	-	FMC_NCE4_1/FMC_NE3	DCMI_D2	LCD_B2	EVENTOUT
	PG11	-	-	-	-	-	-	-	-	-	-	-	ETH_MII_TX_EN/ETH_RMII_TX_EN	FMC_NCE4_2	DCMI_D3	LCD_B3	EVENTOUT
	PG12	-	-	-	-	-	SPI6_MISO	-	-	USART6_RTS	LCD_B4	-	-	FMC_NE4	-	LCD_B1	EVENTOUT
	PG13	-	-	-	-	-	SPI6_SCK	-	-	USART6_CTS	-	-	ETH_MII_TXD0/ETH_RMII_TXD0	FMC_A24	-	-	EVENTOUT
	PG14	-	-	-	-	-	SPI6_MOSI	-	-	USART6_TX	-	-	ETH_MII_TXD1/ETH_RMII_TXD1	FMC_A25	-	-	EVENTOUT
	PG15	-	-	-	-	-	-	-	-	USART6_CTS	-	-	-	FMC_SDNCAS	DCMI_D13	-	EVENTOUT
Port H	PH0	-	-	-	-	-	-	-	-	-	-	-	-	-	-	-	EVENTOUT
	PH1	-	-	-	-	-	-	-	-	-	-	-	-	-	-	-	EVENTOUT
	PH2	-	-	-	-	-	-	-	-	-	-	-	ETH_MII_CRS	FMC_SDCKE0	-	LCD_R0	EVENTOUT
	PH3	-	-	-	-	-	-	-	-	-	-	-	ETH_MII_COL	FMC_SDNE0	-	LCD_R1	EVENTOUT
	PH4	-	-	-	-	I2C2_SCL	-	-	-	-	-	OTG_HS_ULPI_NXT	-	-	-	-	EVENTOUT
	PH5	-	-	-	-	I2C2_SDA	SPI5_NSS	-	-	-	-	-	-	FMC_SDNWE	-	-	EVENTOUT
	PH6	-	-	-	-	I2C2_SMBA	SPI5_SCK	-	-	-	TIM12_CH1	-	-	FMC_SDNE1	DCMI_D8	-	-

Table 12. STM32F427xx and STM32F429xx alternate function mapping (continued)

Port		AF0	AF1	AF2	AF3	AF4	AF5	AF6	AF7	AF8	AF9	AF10	AF11	AF12	AF13	AF14	AF15
		SYS	TIM1/2	TIM3/4/5	TIM8/9/10/11	I2C1/2/3	SPI1/2/3/4/5/6	SPI2/3/SAI1	SPI3/USART1/2/3	USART6/UART4/5/7/8	CAN1/2/TIM12/13/14/LCD	OTG2_HS/OTG1_FS	ETH	FMC/SDIO/OTG2_FS	DCMI	LCD	SYS
Port H	PH7	-	-	-	-	I2C3_SCL	SPI5_MISO	-	-	-	-	-	ETH_MII_RXD3	FMC_SDCKE1	DCMI_D9	-	-
	PH8	-	-	-	-	I2C3_SDA	-	-	-	-	-	-	-	FMC_D16	DCMI_HSYNC	LCD_R2	EVENTOUT
	PH9	-	-	-	-	I2C3_SMBA	-	-	-	-	TIM12_CH2	-	-	FMC_D17	DCMI_D0	LCD_R3	EVENTOUT
	PH10	-	-	TIM5_CH1	-	-	-	-	-	-	-	-	-	FMC_D18	DCMI_D1	LCD_R4	EVENTOUT
	PH11	-	-	TIM5_CH2	-	-	-	-	-	-	-	-	-	FMC_D19	DCMI_D2	LCD_R5	EVENTOUT
	PH12	-	-	TIM5_CH3	-	-	-	-	-	-	-	-	-	FMC_D20	DCMI_D3	LCD_R6	EVENTOUT
	PH13	-	-	-	TIM8_CH1N	-	-	-	-	-	CAN1_TX	-	-	FMC_D21	-	LCD_G2	EVENTOUT
	PH14	-	-	-	TIM8_CH2N	-	-	-	-	-	-	-	-	FMC_D22	DCMI_D4	LCD_G3	EVENTOUT
	PH15	-	-	-	TIM8_CH3N	-	-	-	-	-	-	-	-	FMC_D23	DCMI_D11	LCD_G4	EVENTOUT
Port I	PI0	-	-	TIM5_CH4	-	-	SPI2_NSS/I2S2_WS	-	-	-	-	-	-	FMC_D24	DCMI_D13	LCD_G5	EVENTOUT
	PI1	-	-	-	-	-	SPI2_SCK/I2S2_CK	-	-	-	-	-	-	FMC_D25	DCMI_D8	LCD_G6	EVENTOUT
	PI2	-	-	-	TIM8_CH4	-	SPI2_MISO	I2S2ext_SD	-	-	-	-	-	FMC_D26	DCMI_D9	LCD_G7	EVENTOUT
	PI3	-	-	-	TIM8_ETR	-	SPI2_MOSI/I2S2_SD							FMC_D27	DCMI_D10		EVENTOUT
	PI4	-	-	-	TIM8_BKIN	-	-	-	-	-	-	-	-	FMC_NBL2	DCMI_D5	LCD_B4	EVENTOUT
	PI5	-	-	-	TIM8_CH1	-	-	-	-	-	-	-	-	FMC_NBL3	DCMI_VSYNC	LCD_B5	EVENTOUT
	PI6	-	-	-	TIM8_CH2	-	-	-	-	-	-	-	-	FMC_D28	DCMI_D6	LCD_B6	EVENTOUT

Table 12. STM32F427xx and STM32F429xx alternate function mapping (continued)

Port		AF0	AF1	AF2	AF3	AF4	AF5	AF6	AF7	AF8	AF9	AF10	AF11	AF12	AF13	AF14	AF15
		SYS	TIM1/2	TIM3/4/5	TIM8/9/10/11	I2C1/2/3	SPI1/2/3/4/5/6	SPI2/3/SAI1	SPI3/USART1/2/3	USART6/UART4/5/7/8	CAN1/2/TIM12/13/14/LCD	OTG2_HS/OTG1_FS	ETH	FMC/SDIO/OTG2_FS	DCMI	LCD	SYS
Port I	PI7	-	-	-	TIM8_CH3	-	-	-	-	-	-	-	-	FMC_D29	DCMI_D7	LCD_B7	EVENTOUT
	PI8	-	-	-	-	-	-	-	-	-	-	-	-	-	-	-	EVENTOUT
	PI9	-	-	-	-	-	-	-	-	-	CAN1_RX	-	-	FMC_D30	-	LCD_VSYNC	EVENTOUT
	PI10	-	-	-	-	-	-	-	-	-	-	-	ETH_MII_RX_ER	FMC_D31	-	LCD_HSYNC	EVENTOUT
	PI11	-	-	-	-	-	-	-	-	-	-	OTG_HS_ULPI_DIR	-	-	-	-	EVENTOUT
	PI12	-	-	-	-	-	-	-	-	-	-	-	-	-	-	LCD_HSYNC	EVENTOUT
	PI13	-	-	-	-	-	-	-	-	-	-	-	-	-	-	LCD_VSYNC	EVENTOUT
	PI14	-	-	-	-	-	-	-	-	-	-	-	-	-	-	LCD_CLK	EVENTOUT
	PI15	-	-	-	-	-	-	-	-	-	-	-	-	-	-	LCD_R0	EVENTOUT
Port J	PJ0	-	-	-	-	-	-	-	-	-	-	-	-	-	-	LCD_R1	EVENTOUT
	PJ1	-	-	-	-	-	-	-	-	-	-	-	-	-	-	LCD_R2	EVENTOUT
	PJ2	-	-	-	-	-	-	-	-	-	-	-	-	-	-	LCD_R3	EVENTOUT
	PJ3	-	-	-	-	-	-	-	-	-	-	-	-	-	-	LCD_R4	EVENTOUT
	PJ4	-	-	-	-	-	-	-	-	-	-	-	-	-	-	LCD_R5	EVENTOUT
	PJ5	-	-	-	-	-	-	-	-	-	-	-	-	-	-	LCD_R6	EVENTOUT
	PJ6	-	-	-	-	-	-	-	-	-	-	-	-	-	-	LCD_R7	EVENTOUT
	PJ7	-	-	-	-	-	-	-	-	-	-	-	-	-	-	LCD_G0	EVENTOUT

Table 12. STM32F427xx and STM32F429xx alternate function mapping (continued)

Port		AF0	AF1	AF2	AF3	AF4	AF5	AF6	AF7	AF8	AF9	AF10	AF11	AF12	AF13	AF14	AF15
		SYS	TIM1/2	TIM3/4/5	TIM8/9/10/11	I2C1/2/3	SPI1/2/3/4/5/6	SPI2/3/SAI1	SPI3/USART1/2/3	USART6/UART4/5/7/8	CAN1/2/TIM12/13/14/LCD	OTG2_HS/OTG1_FS	ETH	FMC/SDIO/OTG2_FS	DCMI	LCD	SYS
Port J	PJ8	-	-	-	-	-	-	-	-	-	-	-	-	-	-	LCD_G1	EVENTOUT
	PJ9	-	-	-	-	-	-	-	-	-	-	-	-	-	-	LCD_G2	EVENTOUT
	PJ10	-	-	-	-	-	-	-	-	-	-	-	-	-	-	LCD_G3	EVENTOUT
	PJ11	-	-	-	-	-	-	-	-	-	-	-	-	-	-	LCD_G4	EVENTOUT
	PJ12	-	-	-	-	-	-	-	-	-	-	-	-	-	-	LCD_B0	EVENTOUT
	PJ13	-	-	-	-	-	-	-	-	-	-	-	-	-	-	LCD_B1	EVENTOUT
	PJ14	-	-	-	-	-	-	-	-	-	-	-	-	-	-	LCD_B2	EVENTOUT
	PJ15	-	-	-	-	-	-	-	-	-	-	-	-	-	-	LCD_B3	EVENTOUT
Port K	PK0	-	-	-	-	-	-	-	-	-	-	-	-	-	-	LCD_G5	EVENTOUT
	PK1	-	-	-	-	-	-	-	-	-	-	-	-	-	-	LCD_G6	EVENTOUT
	PK2	-	-	-	-	-	-	-	-	-	-	-	-	-	-	LCD_G7	EVENTOUT
	PK3	-	-	-	-	-	-	-	-	-	-	-	-	-	-	LCD_B4	EVENTOUT
	PK4	-	-	-	-	-	-	-	-	-	-	-	-	-	-	LCD_B5	EVENTOUT
	PK5	-	-	-	-	-	-	-	-	-	-	-	-	-	-	LCD_B6	EVENTOUT
	PK6	-	-	-	-	-	-	-	-	-	-	-	-	-	-	LCD_B7	EVENTOUT
	PK7	-	-	-	-	-	-	-	-	-	-	-	-	-	-	LCD_DE	EVENTOUT

1. The DCMI_VSYNC alternate function on PG9 is only available on silicon revision 3.

5 Memory mapping

The memory map is shown in *Figure 19*.

Figure 19. Memory map

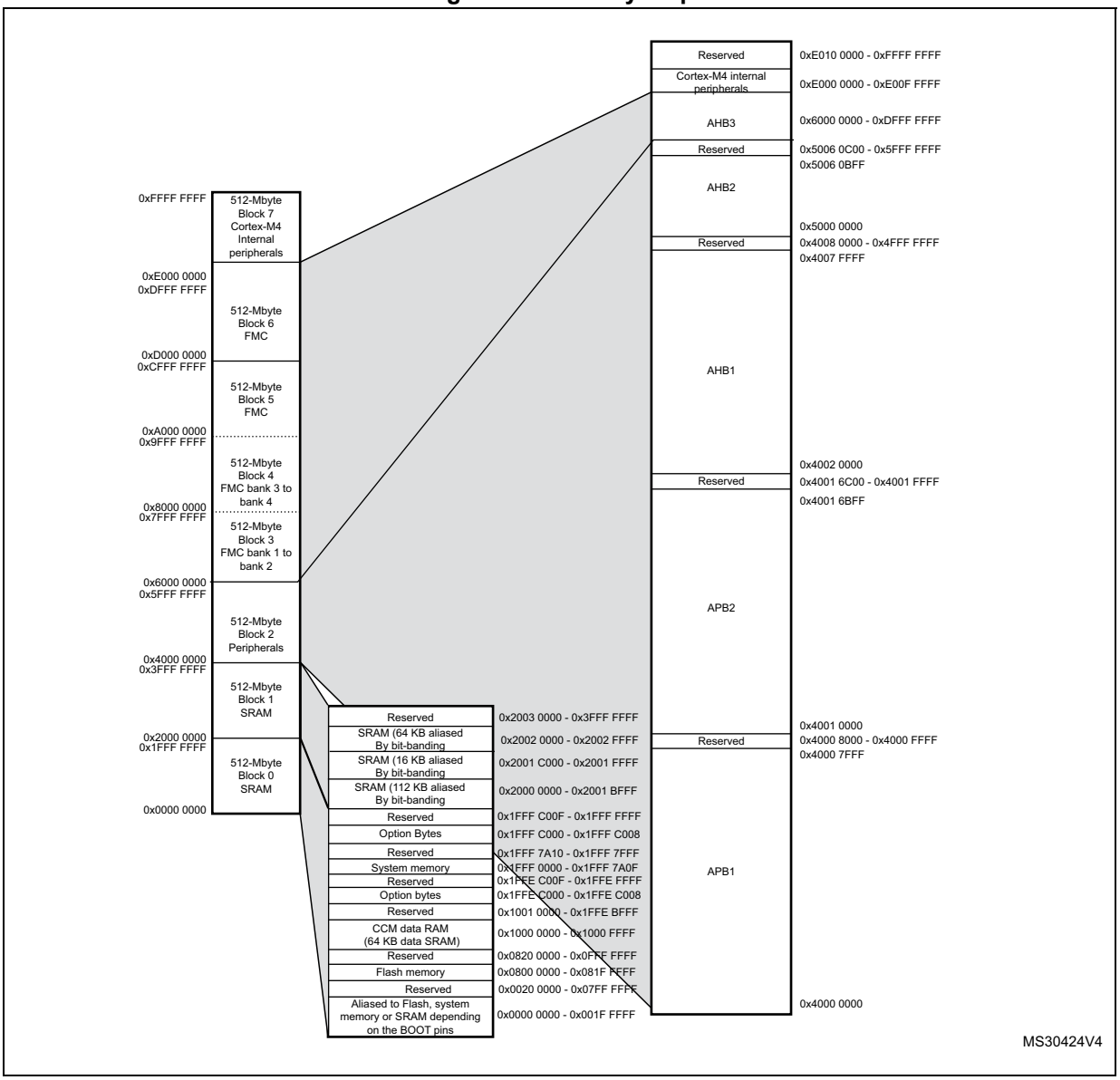

Table 13. STM32F427xx and STM32F429xx register boundary addresses

Bus	Boundary address	Peripheral
	0xE00F FFFF - 0xFFFF FFFF	Reserved
Cortex-M4	0xE000 0000 - 0xE00F FFFF	Cortex-M4 internal peripherals
AHB3	0xD000 0000 - 0xDFFF FFFF	FMC bank 6
	0xC000 0000 - 0xCFFF FFFF	FMC bank 5
	0xA000 1000 - 0xBFFF FFFF	Reserved
	0xA000 0000- 0xA000 0FFF	FMC control register
	0x9000 0000 - 0x9FFF FFFF	FMC bank 4
	0x8000 0000 - 0x8FFF FFFF	FMC bank 3
	0x7000 0000 - 0x7FFF FFFF	FMC bank 2
	0x6000 0000 - 0x6FFF FFFF	FMC bank 1
	0x5006 0C00- 0x5FFF FFFF	Reserved
AHB2	0x5006 0800 - 0X5006 0BFF	RNG
	0x5005 0400 - X5006 07FF	Reserved
	0x5005 0000 - 0X5005 03FF	DCMI
	0x5004 0000- 0x5004 FFFF	Reserved
	0x5000 0000 - 0X5003 FFFF	USB OTG FS

Table 13. STM32F427xx and STM32F429xx register boundary addresses (continued)

Bus	Boundary address	Peripheral
	0x4008 0000- 0x4FFF FFFF	Reserved
AHB1	0x4004 0000 - 0x4007 FFFF	USB OTG HS
	0x4002 BC00- 0x4003 FFFF	Reserved
	0x4002 B000 - 0x4002 BBFF	DMA2D
	0x4002 9400 - 0x4002 AFFF	Reserved
	0x4002 9000 - 0x4002 93FF	ETHERNET MAC
	0x4002 8C00 - 0x4002 8FFF	
	0x4002 8800 - 0x4002 8BFF	
	0x4002 8400 - 0x4002 87FF	
	0x4002 8000 - 0x4002 83FF	
	0x4002 6800 - 0x4002 7FFF	Reserved
	0x4002 6400 - 0x4002 67FF	DMA2
	0x4002 6000 - 0x4002 63FF	DMA1
	0X4002 5000 - 0X4002 5FFF	Reserved
	0x4002 4000 - 0x4002 4FFF	BKPSRAM
	0x4002 3C00 - 0x4002 3FFF	Flash interface register
	0x4002 3800 - 0x4002 3BFF	RCC
	0X4002 3400 - 0X4002 37FF	Reserved
	0x4002 3000 - 0x4002 33FF	CRC
	0x4002 2C00 - 0x4002 2FFF	Reserved
	0x4002 2800 - 0x4002 2BFF	GPIOK
	0x4002 2400 - 0x4002 27FF	GPIOJ
	0x4002 2000 - 0x4002 23FF	GPIOI
	0x4002 1C00 - 0x4002 1FFF	GPIOH
	0x4002 1800 - 0x4002 1BFF	GPIOG
	0x4002 1400 - 0x4002 17FF	GPIOF
	0x4002 1000 - 0x4002 13FF	GPIOE
	0X4002 0C00 - 0x4002 0FFF	GPIOD
	0x4002 0800 - 0x4002 0BFF	GPIOC
	0x4002 0400 - 0x4002 07FF	GPIOB
	0x4002 0000 - 0x4002 03FF	GPIOA

Table 13. STM32F427xx and STM32F429xx register boundary addresses (continued)

Bus	Boundary address	Peripheral
	0x4001 6C00- 0x4001 FFFF	Reserved
APB2	0x4001 6800 - 0x4001 6BFF	LCD-TFT
	0x4001 5C00 - 0x4001 67FF	Reserved
	0x4001 5800 - 0x4001 5BFF	SAI1
	0x4001 5400 - 0x4001 57FF	SPI6
	0x4001 5000 - 0x4001 53FF	SPI5
	0x4001 5400 - 0x4001 57FF	SPI6
	0x4001 5000 - 0x4001 53FF	SPI5
	0x4001 4C00 - 0x4001 4FFF	Reserved
	0x4001 4800 - 0x4001 4BFF	TIM11
	0x4001 4400 - 0x4001 47FF	TIM10
	0x4001 4000 - 0x4001 43FF	TIM9
	0x4001 3C00 - 0x4001 3FFF	EXTI
	0x4001 3800 - 0x4001 3BFF	SYSCFG
	0x4001 3400 - 0x4001 37FF	SPI4
	0x4001 3000 - 0x4001 33FF	SPI1
	0x4001 2C00 - 0x4001 2FFF	SDIO
	0x4001 2400 - 0x4001 2BFF	Reserved
	0x4001 2000 - 0x4001 23FF	ADC1 - ADC2 - ADC3
	0x4001 1800 - 0x4001 1FFF	Reserved
	0x4001 1400 - 0x4001 17FF	USART6
	0x4001 1000 - 0x4001 13FF	USART1
	0x4001 0800 - 0x4001 0FFF	Reserved
	0x4001 0400 - 0x4001 07FF	TIM8
	0x4001 0000 - 0x4001 03FF	TIM1

Table 13. STM32F427xx and STM32F429xx register boundary addresses (continued)

Bus	Boundary address	Peripheral
	0x4000 8000- 0x4000 FFFF	Reserved
APB1	0x4000 7C00 - 0x4000 7FFF	UART8
	0x4000 7800 - 0x4000 7BFF	UART7
	0x4000 7400 - 0x4000 77FF	DAC
	0x4000 7000 - 0x4000 73FF	PWR
	0x4000 6C00 - 0x4000 6FFF	Reserved
	0x4000 6800 - 0x4000 6BFF	CAN2
	0x4000 6400 - 0x4000 67FF	CAN1
	0x4000 6000 - 0x4000 63FF	Reserved
	0x4000 5C00 - 0x4000 5FFF	I2C3
	0x4000 5800 - 0x4000 5BFF	I2C2
	0x4000 5400 - 0x4000 57FF	I2C1
	0x4000 5000 - 0x4000 53FF	UART5
	0x4000 4C00 - 0x4000 4FFF	UART4
	0x4000 4800 - 0x4000 4BFF	USART3
	0x4000 4400 - 0x4000 47FF	USART2
	0x4000 4000 - 0x4000 43FF	I2S3ext
	0x4000 3C00 - 0x4000 3FFF	SPI3 / I2S3
	0x4000 3800 - 0x4000 3BFF	SPI2 / I2S2
	0x4000 3400 - 0x4000 37FF	I2S2ext
	0x4000 3000 - 0x4000 33FF	IWDG
	0x4000 2C00 - 0x4000 2FFF	WWDG
	0x4000 2800 - 0x4000 2BFF	RTC & BKP Registers
	0x4000 2400 - 0x4000 27FF	Reserved
	0x4000 2000 - 0x4000 23FF	TIM14
	0x4000 1C00 - 0x4000 1FFF	TIM13
	0x4000 1800 - 0x4000 1BFF	TIM12
	0x4000 1400 - 0x4000 17FF	TIM7
	0x4000 1000 - 0x4000 13FF	TIM6
	0x4000 0C00 - 0x4000 0FFF	TIM5
	0x4000 0800 - 0x4000 0BFF	TIM4
	0x4000 0400 - 0x4000 07FF	TIM3
	0x4000 0000 - 0x4000 03FF	TIM2

6 Electrical characteristics

6.1 Parameter conditions

Unless otherwise specified, all voltages are referenced to V_{SS}.

6.1.1 Minimum and maximum values

Unless otherwise specified the minimum and maximum values are guaranteed in the worst conditions of ambient temperature, supply voltage and frequencies by tests in production on 100% of the devices with an ambient temperature at T_A = 25 °C and T_A = $T_A$max (given by the selected temperature range).

Data based on characterization results, design simulation and/or technology characteristics are indicated in the table footnotes and are not tested in production. Based on characterization, the minimum and maximum values refer to sample tests and represent the mean value plus or minus three times the standard deviation (mean±3σ).

6.1.2 Typical values

Unless otherwise specified, typical data are based on T_A = 25 °C, V_{DD} = 3.3 V (for the 1.7 V ≤V_{DD} ≤3.6 V voltage range). They are given only as design guidelines and are not tested.

Typical ADC accuracy values are determined by characterization of a batch of samples from a standard diffusion lot over the full temperature range, where 95% of the devices have an error less than or equal to the value indicated (mean±2σ).

6.1.3 Typical curves

Unless otherwise specified, all typical curves are given only as design guidelines and are not tested.

6.1.4 Loading capacitor

The loading conditions used for pin parameter measurement are shown in *Figure 20*.

6.1.5 Pin input voltage

The input voltage measurement on a pin of the device is described in *Figure 21*.

Figure 20. Pin loading conditions

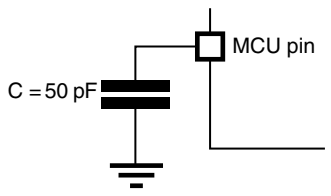

Figure 21. Pin input voltage

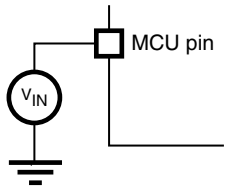

6.1.6 Power supply scheme

Figure 22. Power supply scheme

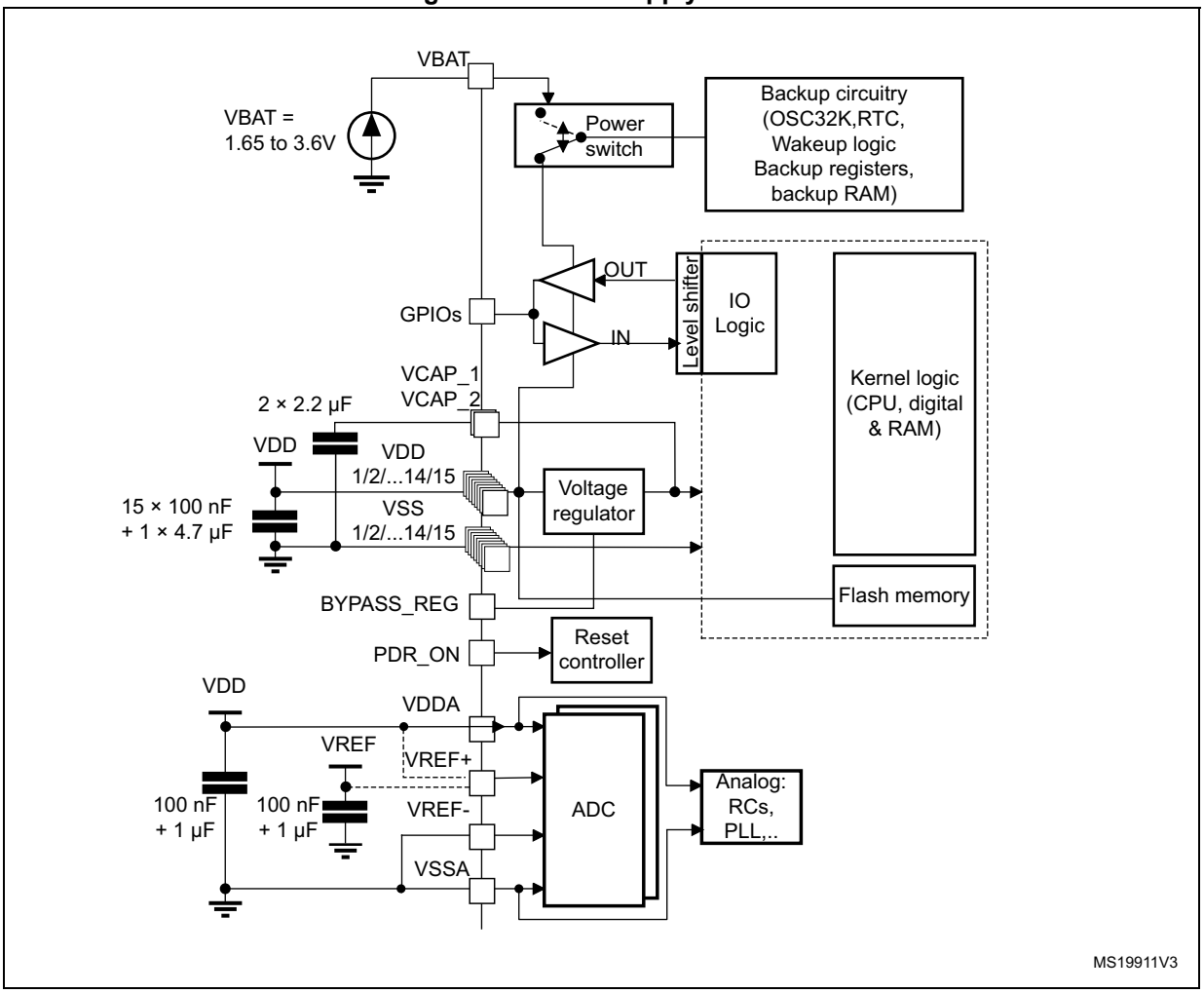

1. To connect BYPASS_REG and PDR_ON pins, refer to *Section 3.17: Power supply supervisor* and *Section 3.18: Voltage regulator*
2. The two 2.2 µF ceramic capacitors should be replaced by two 100 nF decoupling capacitors when the voltage regulator is OFF.
3. The 4.7 µF ceramic capacitor must be connected to one of the V_{DD} pin.
4. V_{DDA}=V_{DD} and V_{SSA}=V_{SS}.

Caution: Each power supply pair (V_{DD}/V_{SS}, V_{DDA}/V_{SSA} ...) must be decoupled with filtering ceramic capacitors as shown above. These capacitors must be placed as close as possible to, or below, the appropriate pins on the underside of the PCB to ensure good operation of the device. It is not recommended to remove filtering capacitors to reduce PCB size or cost. This might cause incorrect operation of the device.

6.1.7 Current consumption measurement

Figure 23. Current consumption measurement scheme

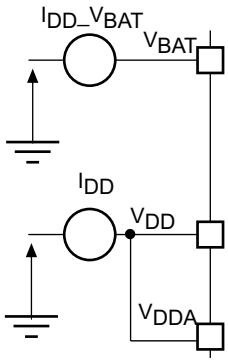

6.2 Absolute maximum ratings

Stresses above the absolute maximum ratings listed in *Table 14: Voltage characteristics*, *Table 15: Current characteristics*, and *Table 16: Thermal characteristics* may cause permanent damage to the device. These are stress ratings only and functional operation of the device at these conditions is not implied. Exposure to maximum rating conditions for extended periods may affect device reliability.

Device mission profile (application conditions) is compliant with JEDEC JESD47 Qualification Standard, extended mission profiles are available on demand.

Table 14. Voltage characteristics

Symbol	Ratings	Min	Max	Unit
$V_{DD}–V_{SS}$	External main supply voltage (including V_{DDA}, V_{DD} and VBAT)(1)	− 0.3	4.0	V
V_{IN}	Input voltage on FT pins(2)	V_{SS} − 0.3	V_{DD}+4.0	
	Input voltage on TTa pins	V_{SS} − 0.3	4.0	
	Input voltage on any other pin	V_{SS} − 0.3	4.0	
	Input voltage on BOOT0 pin	V_{SS}	9.0	
$\|\Delta V_{DDx}\|$	Variations between different V_{DD} power pins	-	50	mV
$\|V_{SSX} - V_{SS}\|$	Variations between all the different ground pins including V_{REF-}	-	50	
$V_{ESD(HBM)}$	Electrostatic discharge voltage (human body model)	see *Section 6.3.15: Absolute maximum ratings (electrical sensitivity)*		

1. All main power (V_{DD}, V_{DDA}) and ground (V_{SS}, V_{SSA}) pins must always be connected to the external power supply, in the permitted range.
2. V_{IN} maximum value must always be respected. Refer to *Table 15* for the values of the maximum allowed injected current.

Table 15. Current characteristics

Symbol	Ratings	Max.	Unit
ΣI_{VDD}	Total current into sum of all V_{DD_x} power lines (source)(1)	270	mA
ΣI_{VSS}	Total current out of sum of all V_{SS_x} ground lines (sink)(1)	− 270	
I_{VDD}	Maximum current into each V_{DD_x} power line (source)(1)	100	
I_{VSS}	Maximum current out of each V_{SS_x} ground line (sink)(1)	− 100	
I_{IO}	Output current sunk by any I/O and control pin	25	
	Output current sourced by any I/Os and control pin	− 25	
ΣI_{IO}	Total output current sunk by sum of all I/O and control pins (2)	120	
	Total output current sourced by sum of all I/Os and control pins(2)	− 120	
$I_{INJ(PIN)}$ (3)	Injected current on FT pins (4)	− 5/+0	
	Injected current on NRST and BOOT0 pins (4)		
	Injected current on TTa pins(5)	±5	
$\Sigma I_{INJ(PIN)}$(5)	Total injected current (sum of all I/O and control pins)(6)	±25	

1. All main power (V_{DD}, V_{DDA}) and ground (V_{SS}, V_{SSA}) pins must always be connected to the external power supply, in the permitted range.
2. This current consumption must be correctly distributed over all I/Os and control pins. The total output current must not be sunk/sourced between two consecutive power supply pins referring to high pin count LQFP packages.
3. Negative injection disturbs the analog performance of the device. See note in *Section 6.3.21: 12-bit ADC characteristics*.
4. Positive injection is not possible on these I/Os and does not occur for input voltages lower than the specified maximum value.
5. A positive injection is induced by $V_{IN}>V_{DDA}$ while a negative injection is induced by $V_{IN}<V_{SS}$. $I_{INJ(PIN)}$ must never be exceeded. Refer to *Table 14* for the values of the maximum allowed input voltage.
6. When several inputs are submitted to a current injection, the maximum $\Sigma I_{INJ(PIN)}$ is the absolute sum of the positive and negative injected currents (instantaneous values).

Table 16. Thermal characteristics

Symbol	Ratings	Value	Unit
T_{STG}	Storage temperature range	− 65 to +150	°C
T_J	Maximum junction temperature	125	°C

6.3 Operating conditions

6.3.1 General operating conditions

Table 17. General operating conditions

Symbol	Parameter	Conditions[1]		Min	Typ	Max	Unit
f_{HCLK}	Internal AHB clock frequency	Power Scale 3 (VOS[1:0] bits in PWR_CR register = 0x01), Regulator ON, over-drive OFF		0	-	120	MHz
		Power Scale 2 (VOS[1:0] bits in PWR_CR register = 0x10), Regulator ON	Over-drive OFF	0	-	144	
			Over-drive ON		-	168	
		Power Scale 1 (VOS[1:0] bits in PWR_CR register= 0x11), Regulator ON	Over-drive OFF	0	-	168	
			Over-drive ON		-	180	
f_{PCLK1}	Internal APB1 clock frequency	Over-drive OFF		0	-	42	
		Over-drive ON		0	-	45	
f_{PCLK2}	Internal APB2 clock frequency	Over-drive OFF		0	-	84	
		Over-drive ON		0	-	90	
V_{DD}	Standard operating voltage			1.7[2]	-	3.6	V
V_{DDA} [3][4]	Analog operating voltage (ADC limited to 1.2 M samples)	Must be the same potential as V_{DD}[5]		1.7[2]	-	2.4	
	Analog operating voltage (ADC limited to 2.4 M samples)			2.4	-	3.6	
V_{BAT}	Backup operating voltage			1.65	-	3.6	
V_{12}	Regulator ON: 1.2 V internal voltage on V_{CAP_1}/V_{CAP_2} pins	Power Scale 3 ((VOS[1:0] bits in PWR_CR register = 0x01), 120 MHz HCLK max frequency		1.08	1.14	1.20	V
		Power Scale 2 ((VOS[1:0] bits in PWR_CR register = 0x10), 144 MHz HCLK max frequency with over-drive OFF or 168 MHz with over-drive ON		1.20	1.26	1.32	
		Power Scale 1 ((VOS[1:0] bits in PWR_CR register = 0x11), 168 MHz HCLK max frequency with over-drive OFF or 180 MHz with over-drive ON		1.26	1.32	1.40	
	Regulator OFF: 1.2 V external voltage must be supplied from external regulator on V_{CAP_1}/V_{CAP_2} pins[6]	Max frequency 120 MHz		1.10	1.14	1.20	
		Max frequency 144 MHz		1.20	1.26	1.32	
		Max frequency 168 MHz		1.26	1.32	1.38	

Table 17. General operating conditions (continued)

Symbol	Parameter	Conditions[1]	Min	Typ	Max	Unit
V_{IN}	Input voltage on RST and FT pins[7]	$2\ V \le V_{DD} \le 3.6\ V$	− 0.3	-	5.5	V
		$V_{DD} \le 2\ V$	− 0.3	-	5.2	
	Input voltage on TTa pins		− 0.3	-	V_{DDA}+ 0.3	
	Input voltage on BOOT0 pin		0	-	9	
P_D	Power dissipation at T_A = 85 °C for suffix 6 or T_A = 105 °C for suffix 7[8]	LQFP100	-	-	465	mW
		WLCSP143	-	-	641	
		LQFP144	-	-	500	
		UFBGA169	-	-	385	
		LQFP176	-	-	526	
		UFBGA176	-	-	513	
		LQFP208	-	-	1053	
		TFBGA216	-	-	690	
T_A	Ambient temperature for 6 suffix version	Maximum power dissipation	− 40		85	°C
		Low power dissipation[9]	− 40		105	
	Ambient temperature for 7 suffix version	Maximum power dissipation	− 40		105	°C
		Low power dissipation[9]	− 40		125	
T_J	Junction temperature range	6 suffix version	− 40		105	°C
		7 suffix version	− 40		125	

1. The over-drive mode is not supported at the voltage ranges from 1.7 to 2.1 V.
2. V_{DD}/V_{DDA} minimum value of 1.7 V is obtained with the use of an external power supply supervisor (refer to *Section 3.17.2: Internal reset OFF*).
3. When the ADC is used, refer to *Table 74: ADC characteristics*.
4. If V_{REF+} pin is present, it must respect the following condition: V_{DDA}-V_{REF+} < 1.2 V.
5. It is recommended to power V_{DD} and V_{DDA} from the same source. A maximum difference of 300 mV between V_{DD} and V_{DDA} can be tolerated during power-up and power-down operation.
6. The over-drive mode is not supported when the internal regulator is OFF.
7. To sustain a voltage higher than VDD+0.3, the internal Pull-up and Pull-Down resistors must be disabled
8. If T_A is lower, higher P_D values are allowed as long as T_J does not exceed T_{Jmax}.
9. In low power dissipation state, T_A can be extended to this range as long as T_J does not exceed T_{Jmax}.

Table 18. Limitations depending on the operating power supply range

Operating power supply range	ADC operation	Maximum Flash memory access frequency with no wait states ($f_{Flashmax}$)	Maximum HCLK frequency vs Flash memory wait states (1)(2)	I/O operation	Possible Flash memory operations
V_{DD} =1.7 to 2.1 V(3)	Conversion time up to 1.2 Msps	20 MHz(4)	168 MHz with 8 wait states and over-drive OFF	No I/O compensation	8-bit erase and program operations only
V_{DD} = 2.1 to 2.4 V	Conversion time up to 1.2 Msps	22 MHz	180 MHz with 8 wait states and over-drive ON	No I/O compensation	16-bit erase and program operations
V_{DD} = 2.4 to 2.7 V	Conversion time up to 2.4 Msps	24 MHz	180 MHz with 7 wait states and over-drive ON	I/O compensation works	16-bit erase and program operations
V_{DD} = 2.7 to 3.6 V(5)	Conversion time up to 2.4 Msps	30 MHz	180 MHz with 5 wait states and over-drive ON	I/O compensation works	32-bit erase and program operations

1. Applicable only when the code is executed from Flash memory. When the code is executed from RAM, no wait state is required.
2. Thanks to the ART accelerator and the 128-bit Flash memory, the number of wait states given here does not impact the execution speed from Flash memory since the ART accelerator allows to achieve a performance equivalent to 0 wait state program execution.
3. V_{DD}/V_{DDA} minimum value of 1.7 V is obtained with the use of an external power supply supervisor (refer to *Section 3.17.2: Internal reset OFF*).
4. Prefetch is not available.
5. The voltage range for USB full speed PHYs can drop down to 2.7 V. However the electrical characteristics of D- and D+ pins will be degraded between 2.7 and 3 V.

6.3.2 VCAP1/VCAP2 external capacitor

Stabilization for the main regulator is achieved by connecting an external capacitor C_{EXT} to the VCAP1/VCAP2 pins. C_{EXT} is specified in *Table 19*.

Figure 24. External capacitor C_{EXT}

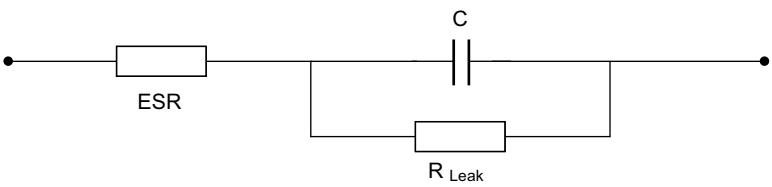

1. Legend: ESR is the equivalent series resistance.

Table 19. VCAP1/VCAP2 operating conditions(1)

Symbol	Parameter	Conditions
CEXT	Capacitance of external capacitor	2.2 µF
ESR	ESR of external capacitor	< 2 Ω

1. When bypassing the voltage regulator, the two 2.2 µF V_{CAP} capacitors are not required and should be replaced by two 100 nF decoupling capacitors.

6.3.3 Operating conditions at power-up / power-down (regulator ON)

Subject to general operating conditions for T_A.

Table 20. Operating conditions at power-up / power-down (regulator ON)

Symbol	Parameter	Min	Max	Unit
t_{VDD}	V_{DD} rise time rate	20	∞	µs/V
	V_{DD} fall time rate	20	∞	

6.3.4 Operating conditions at power-up / power-down (regulator OFF)

Subject to general operating conditions for T_A.

Table 21. Operating conditions at power-up / power-down (regulator OFF)(1)

Symbol	Parameter	Conditions	Min	Max	Unit
t_{VDD}	V_{DD} rise time rate	Power-up	20	∞	µs/V
	V_{DD} fall time rate	Power-down	20	∞	
t_{VCAP}	V_{CAP_1} and V_{CAP_2} rise time rate	Power-up	20	∞	
	V_{CAP_1} and V_{CAP_2} fall time rate	Power-down	20	∞	

1. To reset the internal logic at power-down, a reset must be applied on pin PA0 when V_{DD} reach below 1.08 V.

6.3.5 Reset and power control block characteristics

The parameters given in *Table 22* are derived from tests performed under ambient temperature and V_{DD} supply voltage conditions summarized in *Table 17*.

Table 22. reset and power control block characteristics

Symbol	Parameter	Conditions	Min	Typ	Max	Unit
V_{PVD}	Programmable voltage detector level selection	PLS[2:0]=000 (rising edge)	2.09	2.14	2.19	V
		PLS[2:0]=000 (falling edge)	1.98	2.04	2.08	V
		PLS[2:0]=001 (rising edge)	2.23	2.30	2.37	V
		PLS[2:0]=001 (falling edge)	2.13	2.19	2.25	V
		PLS[2:0]=010 (rising edge)	2.39	2.45	2.51	V
		PLS[2:0]=010 (falling edge)	2.29	2.35	2.39	V
		PLS[2:0]=011 (rising edge)	2.54	2.60	2.65	V
		PLS[2:0]=011 (falling edge)	2.44	2.51	2.56	V
		PLS[2:0]=100 (rising edge)	2.70	2.76	2.82	V
		PLS[2:0]=100 (falling edge)	2.59	2.66	2.71	V
		PLS[2:0]=101 (rising edge)	2.86	2.93	2.99	V
		PLS[2:0]=101 (falling edge)	2.65	2.84	2.92	V
		PLS[2:0]=110 (rising edge)	2.96	3.03	3.10	V
		PLS[2:0]=110 (falling edge)	2.85	2.93	2.99	V
		PLS[2:0]=111 (rising edge)	3.07	3.14	3.21	V
		PLS[2:0]=111 (falling edge)	2.95	3.03	3.09	V
$V_{PVDhyst}$(1)	PVD hysteresis		-	100	-	mV
$V_{POR/PDR}$	Power-on/power-down reset threshold	Falling edge	1.60	1.68	1.76	V
		Rising edge	1.64	1.72	1.80	V
$V_{PDRhyst}$(1)	PDR hysteresis		-	40	-	mV
V_{BOR1}	Brownout level 1 threshold	Falling edge	2.13	2.19	2.24	V
		Rising edge	2.23	2.29	2.33	V
V_{BOR2}	Brownout level 2 threshold	Falling edge	2.44	2.50	2.56	V
		Rising edge	2.53	2.59	2.63	V
V_{BOR3}	Brownout level 3 threshold	Falling edge	2.75	2.83	2.88	V
		Rising edge	2.85	2.92	2.97	V
$V_{BORhyst}$(1)	BOR hysteresis		-	100	-	mV
$T_{RSTTEMPO}$(1)(2)	POR reset temporization		0.5	1.5	3.0	ms

Table 22. reset and power control block characteristics (continued)

Symbol	Parameter	Conditions	Min	Typ	Max	Unit
I_{RUSH}(1)	InRush current on voltage regulator power-on (POR or wakeup from Standby)		-	160	200	mA
E_{RUSH}(1)	InRush energy on voltage regulator power-on (POR or wakeup from Standby)	V_{DD} = 1.7 V, T_A = 105 °C, I_{RUSH} = 171 mA for 31 µs	-	-	5.4	µC

1. Guaranteed by design.
2. The reset temporization is measured from the power-on (POR reset or wakeup from V_{BAT}) to the instant when first instruction is read by the user application code.

6.3.6 Over-drive switching characteristics

When the over-drive mode switches from enabled to disabled or disabled to enabled, the system clock is stalled during the internal voltage set-up.

The over-drive switching characteristics are given in *Table 23*. They are sbject to general operating conditions for T_A.

Table 23. Over-drive switching characteristics(1)

Symbol	Parameter	Conditions	Min	Typ	Max	Unit
Tod_swen	Over_drive switch enable time	HSI	-	45	-	µs
		HSE max for 4 MHz and min for 26 MHz	45	-	100	
		External HSE 50 MHz	-	40	-	
Tod_swdis	Over_drive switch disable time	HSI	-	20	-	
		HSE max for 4 MHz and min for 26 MHz.	20	-	80	
		External HSE 50 MHz	-	15	-	

1. Guaranteed by design.

6.3.7 Supply current characteristics

The current consumption is a function of several parameters and factors such as the operating voltage, ambient temperature, I/O pin loading, device software configuration, operating frequencies, I/O pin switching rate, program location in memory and executed binary code.

The current consumption is measured as described in *Figure 23: Current consumption measurement scheme*.

All the run-mode current consumption measurements given in this section are performed with a reduced code that gives a consumption equivalent to CoreMark code.

Typical and maximum current consumption

The MCU is placed under the following conditions:

- All I/O pins are in input mode with a static value at V_{DD} or V_{SS} (no load).
- All peripherals are disabled except if it is explicitly mentioned.
- The Flash memory access time is adjusted both to f_{HCLK} frequency and V_{DD} range (see *Table 18: Limitations depending on the operating power supply range*).
- Regulator ON
- The voltage scaling and over-drive mode are adjusted to f_{HCLK} frequency as follows:
  - Scale 3 for $f_{HCLK} \leq 120$ MHz
  - Scale 2 for 120 MHz < $f_{HCLK} \leq 144$ MHz
  - Scale 1 for 144 MHz < $f_{HCLK} \leq 180$ MHz. The over-drive is only ON at 180 MHz.
- The system clock is HCLK, $f_{PCLK1} = f_{HCLK}/4$, and $f_{PCLK2} = f_{HCLK}/2$.
- External clock frequency is 4 MHz and PLL is ON when f_{HCLK} is higher than 25 MHz.
- The maximum values are obtained for V_{DD} = 3.6 V and a maximum ambient temperature (T_A), and the typical values for T_A= 25 °C and V_{DD} = 3.3 V unless otherwise specified.

Table 24. Typical and maximum current consumption in Run mode, code with data processing running from Flash memory (ART accelerator enabled except prefetch) or RAM(1)

Symbol	Parameter	Conditions	f_{HCLK} (MHz)	Typ	Max(2)			Unit
					T_A = 25 °C	T_A = 85 °C	T_A = 105 °C	
I_{DD}	Supply current in RUN mode	All Peripherals enabled(3)(4)	180	98	104(5)	123	141(5)	mA
			168	89	98(5)	116	133(5)	
			150	75	84	100	115	
			144	72	81	96	112	
			120	54	58	72	85	
			90	43	45	56	66	
			60	29	30	52	62	
			30	16	20	34	46	
			25	13	16	30	43	
			16	11	13	27	39	
			8	5	9	23	36	
			4	4	8	21	34	
			2	2	7	20	33	
		All Peripherals disabled(3)	180	44	47(5)	69	87(5)	
			168	41	45(5)	66	83(5)	
			150	36	39	57	73	
			144	33	37	56	72	
			120	25	29	43	56	
			90	20	23	41	53	
			60	14	16	34	45	
			30	8	12	26	39	
			25	7	10	24	37	
			16	7	9	22	35	
			8	3	7	21	34	
			4	3	6	20	33	
			2	2	6	20	33	

1. Code and data processing running from SRAM1 using boot pins.
2. Guaranteed by characterization.
3. When analog peripheral blocks such as ADCs, DACs, HSE, LSE, HSI, or LSI are ON, an additional power consumption should be considered.
4. When the ADC is ON (ADON bit set in the ADC_CR2 register), add an additional power consumption of 1.6 mA per ADC for the analog part.
5. Guaranteed by test in production.

Table 25. Typical and maximum current consumption in Run mode, code with data processing running from Flash memory (ART accelerator disabled)

Symbol	Parameter	Conditions	f_{HCLK} (MHz)	Typ	Max(1)			Unit
					TA= 25 °C	TA=85 °C	TA=105 °C	
I_{DD}	Supply current in RUN mode	All Peripherals enabled(2)(3)	180	103	112	140	151	mA
			168	98	107	126	144	
			150	87	95	112	128	
			144	85	92	108	124	
			120	66	71	85	99	
			90	54	58	69	80	
			60	37	39	47	55	
			30	20	24	39	51	
			25	17	21	35	48	
			16	12	16	30	42	
			8	7	11	24	37	
			4	5	8	22	35	
			2	3	7	21	34	
		All Peripherals disabled(3)	180	57	62	87	106	
			168	50	54	76	93	
			150	46	50	70	86	
			144	45	49	68	84	
			120	36	41	56	69	
			90	29	34	46	57	
			60	21	24	33	41	
			30	13	17	31	44	
			25	11	15	28	41	
			16	8	12	25	38	
			8	5	9	23	35	
			4	4	7	21	34	
			2	3	6.5	20	33	

1. Guaranteed by characterization unless otherwise specified.
2. When analog peripheral blocks such as ADCs, DACs, HSE, LSE, HSI, or LSI are ON, an additional power consumption should be considered.
3. When the ADC is ON (ADON bit set in the ADC_CR2 register), add an additional power consumption of 1.6 mA per ADC for the analog part.

Table 26. Typical and maximum current consumption in Sleep mode

Symbol	Parameter	Conditions	f_{HCLK} (MHz)	Typ	Max(1)			Unit
					T_A = 25 °C	T_A = 85 °C	T_A = 105 °C	
I_{DD}	Supply current in Sleep mode	All Peripherals enabled(2)	180	78	89(3)	110	130(3)	mA
			168	66	75(3)	93	110(3)	
			150	56	61	80	96	
			144	54	58	78	94	
			120	40	44	59	72	
			90	32	34	46	56	
			60	22	23	31	45	
			30	10	16	30	43	
			25	9	14	28	40	
			16	5	12	25	40	
			8	3	8	22	35	
			4	3	7	21	34	
			2	2	6.5	20	33	
		All Peripherals disabled	180	21	26(3)	54	76(3)	
			168	16	20(3)	41	58(3)	
			150	14	17	36	52	
			144	13	16.5	35	51	
			120	10	14	28	41	
			90	8	13	26	37	
			60	6	9	24	37	
			30	5	8	22	35	
			25	3	7	21	34	
			16	3	7	21	34	
			8	2	6	20	33	
			4	2	6	20	33	
			2	2	6	20	33	

1. Guaranteed by characterization unless otherwise specified.
2. When analog peripheral blocks such as ADCs, DACs, HSE, LSE, HSI, or LSI are ON, an additional power consumption should be considered.
3. Based on characterization, tested in production.

Table 27. Typical and maximum current consumptions in Stop mode

Symbol	Parameter	Conditions	Typ	Max(1)			Unit
				V_{DD} = 3.6 V			
			T_A = 25 °C	T_A = 25 °C	T_A = 85 °C	T_A = 105 °C	
$I_{DD_STOP_NM}$ (normal mode)	Supply current in Stop mode with voltage regulator in main regulator mode	Flash memory in Stop mode, all oscillators OFF, no independent watchdog	0.40	1.50	14.00	25.00	mA
		Flash memory in Deep power down mode, all oscillators OFF, no independent watchdog	0.35	1.50	14.00	25.00	
	Supply current in Stop mode with voltage regulator in Low Power regulator mode	Flash memory in Stop mode, all oscillators OFF, no independent watchdog	0.29	1.10	10.00	18.00	
		Flash memory in Deep power down mode, all oscillators OFF, no independent watchdog	0.23	1.10	10.00	18.00	
$I_{DD_STOP_UDM}$ (under-drive mode)	Supply current in Stop mode with voltage regulator in main regulator and under-drive mode	Flash memory in Deep power down mode, main regulator in under-drive mode, all oscillators OFF, no independent watchdog	0.19	0.50	6.00	9.00	
	Supply current in Stop mode with voltage regulator in Low Power regulator and under-drive mode	Flash memory in Deep power down mode, Low Power regulator in under-drive mode, all oscillators OFF, no independent watchdog	0.10	0.40	4.00	7.00	

1. Data based on characterization, tested in production.

Table 28. Typical and maximum current consumptions in Standby mode

Symbol	Parameter	Conditions	Typ(1)			Max(2)			Unit
			T_A = 25 °C			T_A = 25 °C	T_A = 85 °C	T_A = 105 °C	
			V_{DD} = 1.7 V	V_{DD}= 2.4 V	V_{DD} = 3.3 V	V_{DD} = 3.6 V			
I_{DD_STBY}	Supply current in Standby mode	Backup SRAM ON, low-speed oscillator (LSE) and RTC ON	2.80	3.00	3.60	7.00	19.00	36.00	µA
		Backup SRAM OFF, low-speed oscillator (LSE) and RTC ON	2.30	2.60	3.10	6.00	16.00	31.00	
		Backup SRAM ON, RTC and LSE OFF	2.30	2.50	2.90	6.00(3)	18.00(3)	35.00(3)	
		Backup SRAM OFF, RTC and LSE OFF	1.70	1.90	2.20	5.00(3)	15.00(3)	30.00(3)	

1. The typical current consumption values are given with PDR OFF (internal reset OFF). When the PDR is OFF (internal reset OFF), the typical current consumption is reduced by additional 1.2 µA.
2. Based on characterization, not tested in production unless otherwise specified.
3. Based on characterization, tested in production.

Table 29. Typical and maximum current consumptions in V_{BAT} mode

Symbol	Parameter	Conditions(1)	Typ			Max(2)		Unit
			T_A = 25 °C			T_A = 85 °C	T_A = 105 °C	
			V_{BAT} = 1.7 V	V_{BAT}= 2.4 V	V_{BAT} = 3.3 V	V_{BAT} = 3.6 V		
I_{DD_VBAT}	Backup domain supply current	Backup SRAM ON, low-speed oscillator (LSE) and RTC ON	1.28	1.40	1.62	6	11	µA
		Backup SRAM OFF, low-speed oscillator (LSE) and RTC ON	0.66	0.76	0.97	3	5	
		Backup SRAM ON, RTC and LSE OFF	0.70	0.72	0.74	5	10	
		Backup SRAM OFF, RTC and LSE OFF	0.10	0.10	0.10	2	4	

1. Crystal used: Abracon ABS07-120-32.768 kHz-T with a C_L of 6 pF for typical values.
2. Guaranteed by characterization results.

Figure 25. Typical V_{BAT} current consumption (LSE and RTC ON/backup RAM OFF)

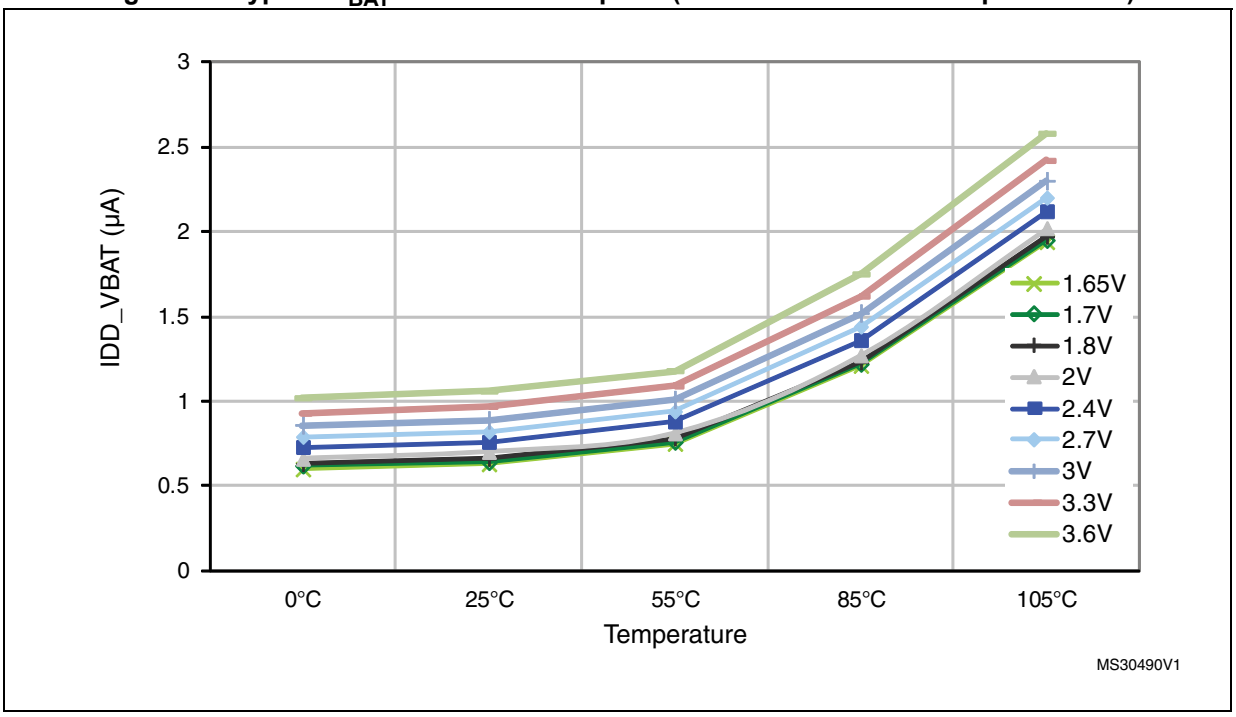

Figure 26. Typical V_{BAT} current consumption (LSE and RTC ON/backup RAM ON)

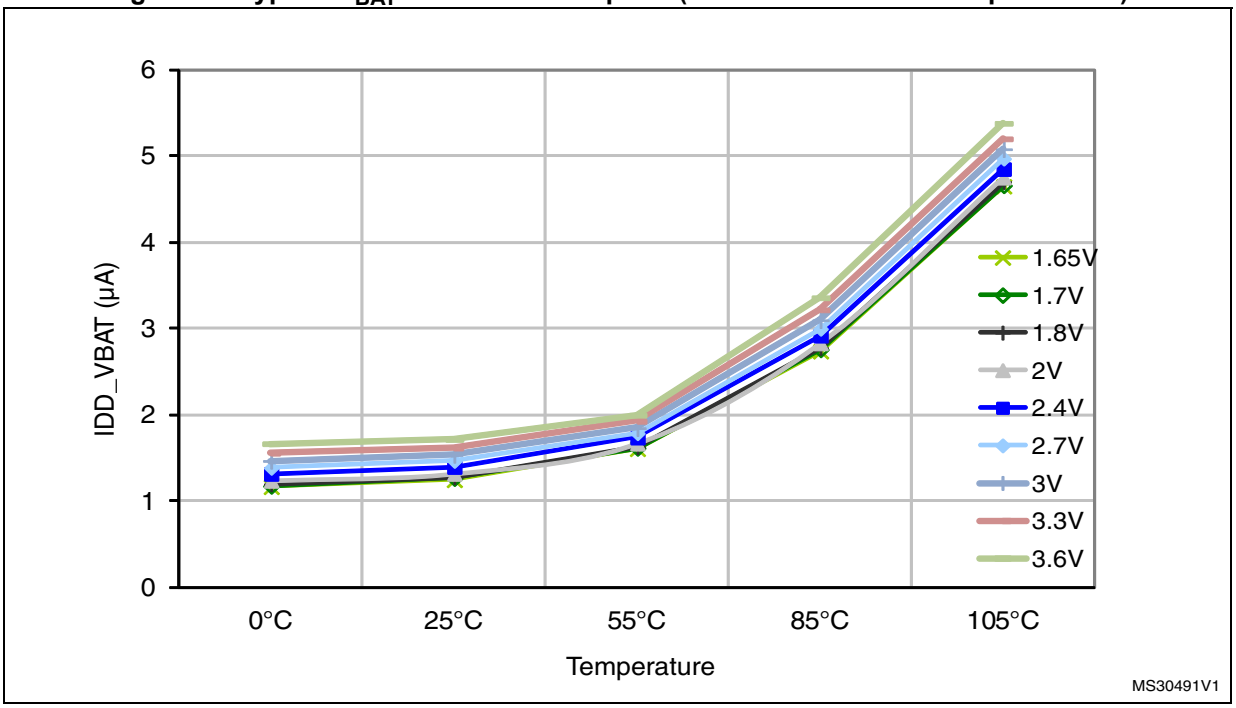

Additional current consumption

The MCU is placed under the following conditions:

- All I/O pins are configured in analog mode.
- The Flash memory access time is adjusted to fHCLK frequency.
- The voltage scaling is adjusted to fHCLK frequency as follows:
  - Scale 3 for $f_{HCLK} \leq 120$ MHz,
  - Scale 2 for 120 MHz < $f_{HCLK} \leq 144$ MHz
  - Scale 1 for 144 MHz < $f_{HCLK} \leq 180$ MHz. The over-drive is only ON at 180 MHz.
- The system clock is HCLK, $f_{PCLK1} = f_{HCLK}/4$, and $f_{PCLK2} = f_{HCLK}/2$.
- HSE crystal clock frequency is 25 MHz.
- When the regulator is OFF, V12 is provided externally as described in *Table 17: General operating conditions*
- T_A= 25 °C .

Table 30. Typical current consumption in Run mode, code with data processing running from Flash memory or RAM, regulator ON (ART accelerator enabled except prefetch), V_{DD}=1.7 V(1)

Symbol	Parameter	Conditions	f_{HCLK} (MHz)	Typ	Unit
I_{DD}	Supply current in RUN mode from V_{DD} supply	All Peripheral enabled	168	88.2	mA
			150	74.3	
			144	71.3	
			120	52.9	
			90	42.6	
			60	28.6	
			30	15.7	
			25	12.3	
		All Peripheral disabled	168	40.6	
			150	30.6	
			144	32.6	
			120	24.7	
			90	19.7	
			60	13.6	
			30	7.7	
			25	6.7	

1. When peripherals are enabled, the power consumption corresponding to the analog part of the peripherls (such as ADC, or DAC) is not included.

Table 31. Typical current consumption in Run mode, code with data processing running from Flash memory, regulator OFF (ART accelerator enabled except prefetch)(1)

Symbol	Parameter	Conditions	f_{HCLK} (MHz)	VDD=3.3 V		VDD=1.7 V		Unit
				I_{DD12}	I_{DD}	I_{DD12}	I_{DD}	
I_{DD12} / I_{DD}	Supply current in RUN mode from V_{12} and V_{DD} supply	All Peripherals enabled	168	77.8	1.3	76.8	1.0	mA
			150	70.8	1.3	69.8	1.0	
			144	64.5	1.3	63.6	1.0	
			120	49.9	1.2	49.3	0.9	
			90	39.2	1.3	38.7	1.0	
			60	27.2	1.2	26.8	0.9	
			30	15.6	1.2	15.4	0.9	
			25	13.6	1.2	13.5	0.9	
		All Peripherals disabled	168	38.2	1.3	37.0	1.0	
			150	34.6	1.3	33.4	1.0	
			144	31.3	1.3	30.3	1.0	
			120	24.0	1.2	23.2	0.9	
			90	18.1	1.4	18.0	1.0	
			60	12.9	1.2	12.5	0.9	
			30	7.2	1.2	6.9	0.9	
			25	6.3	1.2	6.1	0.9	

1. When peripherals are enabled, the power consumption corresponding to the analog part of the peripherals (such as ADC, or DAC) is not included.

Table 32. Typical current consumption in Sleep mode, regulator ON, V_{DD}=1.7 V(1)

Symbol	Parameter	Conditions	f_{HCLK} (MHz)	Typ	Unit
I_{DD}	Supply current in Sleep mode from V_{DD} supply	All Peripherals enabled	168	65.5	mA
			150	55.5	
			144	53.5	
			120	39.0	
			90	31.6	
			60	21.7	
			30	9.8	
			25	8.8	
		All Peripherals disabled	168	15.7	
			150	13.7	
			144	12.7	
			120	9.7	
			90	7.7	
			60	5.7	
			30	4.7	
			25	2.8	

1. When peripherals are enabled, the power consumption corresponding to the analog part of the peripherals (such as ADC, or DAC) is not included.

Table 33. Tyical current consumption in Sleep mode, regulator OFF(1)

Symbol	Parameter	Conditions	f_{HCLK} (MHz)	VDD=3.3 V		VDD=1.7 V		Unit
				I_{DD12}	I_{DD}	I_{DD12}	I_{DD}	
I_{DD12}/I_{DD}	Supply current in Sleep mode from V_{12} and V_{DD} supply	All Peripherals enabled	180	61.5	1.4	-	-	mA
			168	59.4	1.3	59.4	1.0	
			150	53.9	1.3	53.9	1.0	
			144	49.0	1.3	49.0	1.0	
			120	38.0	1.2	38.0	0.9	
			90	29.3	1.4	29.3	1.1	
			60	20.2	1.2	20.2	0.9	
			30	11.9	1.2	11.9	0.9	
			25	10.4	1.2	10.4	0.9	
		All Peripherals disabled	180	14.9	1.4	-	-	
			168	14.0	1.3	14.0	1.0	
			150	12.6	1.3	12.6	1.0	
			144	11.5	1.3	11.5	1.0	
			120	8.7	1.2	8.7	0.9	
			90	7.1	1.4	7.1	1.1	
			60	5.0	1.2	5.0	0.9	
			30	3.1	1.2	3.1	0.9	
			25	2.8	1.2	2.8	0.9	

1. When peripherals are enabled, the power consumption corresponding to the analog part of the peripherals (such as ADC, or DAC) is not included.

I/O system current consumption

The current consumption of the I/O system has two components: static and dynamic.

I/O static current consumption

All the I/Os used as inputs with pull-up generate current consumption when the pin is externally held low. The value of this current consumption can be simply computed by using the pull-up/pull-down resistors values given in *Table 56: I/O static characteristics*.

For the output pins, any external pull-down or external load must also be considered to estimate the current consumption.

Additional I/O current consumption is due to I/Os configured as inputs if an intermediate voltage level is externally applied. This current consumption is caused by the input Schmitt trigger circuits used to discriminate the input value. Unless this specific configuration is required by the application, this supply current consumption can be avoided by configuring these I/Os in analog mode. This is notably the case of ADC input pins which should be configured as analog inputs.

Caution: Any floating input pin can also settle to an intermediate voltage level or switch inadvertently, as a result of external electromagnetic noise. To avoid current consumption related to floating pins, they must either be configured in analog mode, or forced internally to a definite digital value. This can be done either by using pull-up/down resistors or by configuring the pins in output mode.

I/O dynamic current consumption

In addition to the internal peripheral current consumption (see *Table 35: Peripheral current consumption*), the I/Os used by an application also contribute to the current consumption. When an I/O pin switches, it uses the current from the MCU supply voltage to supply the I/O pin circuitry and to charge/discharge the capacitive load (internal or external) connected to the pin:

$$I_{SW} = V_{DD} \times f_{SW} \times C$$

where

I_{SW} is the current sunk by a switching I/O to charge/discharge the capacitive load

V_{DD} is the MCU supply voltage

f_{SW} is the I/O switching frequency

C is the total capacitance seen by the I/O pin: $C = C_{INT} + C_{EXT}$

The test pin is configured in push-pull output mode and is toggled by software at a fixed frequency.

Table 34. Switching output I/O current consumption[1]

Symbol	Parameter	Conditions	I/O toggling frequency (fsw)	Typ	Unit
I_{DDIO}	I/O switching Current	V_{DD} = 3.3 V C= C_{INT}[2]	2 MHz	0.0	mA
			8 MHz	0.2	
			25 MHz	0.6	
			50 MHz	1.1	
			60 MHz	1.3	
			84 MHz	1.8	
			90 MHz	1.9	
		V_{DD} = 3.3 V C_{EXT} = 0 pF C = C_{INT} + C_{EXT} + C_S	2 MHz	0.1	
			8 MHz	0.4	
			25 MHz	1.23	
			50 MHz	2.43	
			60 MHz	2.93	
			84 MHz	3.86	
			90 MHz	4.07	
I_{DDIO}	I/O switching Current	V_{DD} = 3.3 V C_{EXT} = 10 pF C = C_{INT} + C_{EXT} + C_S	2 MHz	0.18	mA
			8 MHz	0.67	
			25 MHz	2.09	
			50 MHz	3.6	
			60 MHz	4.5	
			84 MHz	7.8	
			90 MHz	9.8	
		V_{DD} = 3.3 V C_{EXT} = 22 pF C = C_{INT} + C_{EXT} + C_S	2 MHz	0.26	
			8 MHz	1.01	
			25 MHz	3.14	
			50 MHz	6.39	
			60 MHz	10.68	
		V_{DD} = 3.3 V C_{EXT} = 33 pF C = C_{INT} + Cext + C_S	2 MHz	0.33	
			8 MHz	1.29	
			25 MHz	4.23	
			50 MHz	11.02	

1. C_S is the PCB board capacitance including the pad pin. C_S = 7 pF (estimated value).
2. This test is performed by cutting the LQFP176 package pin (pad removal).

On-chip peripheral current consumption

The MCU is placed under the following conditions:

- At startup, all I/O pins are in analog input configuration.
- All peripherals are disabled unless otherwise mentioned.
- I/O compensation cell enabled.
- The ART accelerator is ON.
- Scale 1 mode selected, internal digital voltage V12 = 1.32 V.
- HCLK is the system clock. $f_{PCLK1} = f_{HCLK}/4$, and $f_{PCLK2} = f_{HCLK}/2$.
  The given value is calculated by measuring the difference of current consumption
  - with all peripherals clocked off
  - with only one peripheral clocked on
  - f_{HCLK} = 180 MHz (Scale1 + over-drive ON), f_{HCLK} = 144 MHz (Scale 2), f_{HCLK} = 120 MHz (Scale 3)"
- Ambient operating temperature is 25 °C and V_{DD}=3.3 V.

Table 35. Peripheral current consumption

Peripheral		I_{DD}(Typ)(1)			Unit
		Scale 1	Scale 2	Scale 3	
AHB1 (up to 180 MHz)	GPIOA	2.50	2.36	2.08	µA/MHz
	GPIOB	2.56	2.36	2.08	
	GPIOC	2.44	2.29	2.00	
	GPIOD	2.50	2.36	2.08	
	GPIOE	2.44	2.29	2.00	
	GPIOF	2.44	2.29	2.00	
	GPIOG	2.39	2.22	2.00	
	GPIOH	2.33	2.15	1.92	
	GPIOI	2.39	2.22	2.00	
	GPIOJ	2.33	2.15	1.92	
	GPIOK	2.33	2.15	1.92	
	OTG_HS+ULPI	27.00	24.86	21.92	
	CRC	0.44	0.42	0.33	
	BKPSRAM	0.78	0.69	0.58	
	DMA1	25.33	23.26	20.50	
	DMA2	24.72	22.71	20.00	
	DMA2D	28.50	26.32	23.33	
	ETH_MAC ETH_MAC_TX ETH_MAC_RX ETH_MAC_PTP	21.56	20.07	17.75	

Table 35. Peripheral current consumption (continued)

Peripheral		I_{DD}(Typ)(1)			Unit
		Scale 1	Scale 2	Scale 3	
AHB2 (up to 180 MHz)	OTG_FS	25.67	26.67	23.58	µA/MHz
	DCMI	3.72	3.40	3.00	
	RNG	2.28	2.36	2.17	
AHB3 (up to 180 MHz)	FMC	21.39	19.79	17.50	µA/MHz
Bus matrix(2)		14.06	13.19	11.75	µA/MHz
APB1 (up to 45 MHz)	TIM2	17.56	16.42	14.47	µA/MHz
	TIM3	14.22	13.36	11.80	
	TIM4	14.89	13.64	12.13	
	TIM5	17.33	16.42	14.47	
	TIM6	2.89	2.53	2.47	
	TIM7	3.11	2.81	2.47	
	TIM12	7.33	6.97	6.13	
	TIM13	4.89	4.47	4.13	
	TIM14	5.56	5.31	4.80	
	PWR	11.11	10.31	9.13	
	USART2	4.22	3.92	3.47	
	USART3	4.44	4.19	3.80	
	UART4	4.00	3.92	3.47	
	UART5	4.00	3.92	3.47	
	UART7	4.00	3.92	3.47	
	UART8	3.78	3.92	3.47	
	I2C1	4.00	3.92	3.47	
	I2C2	4.00	3.92	3.47	
	I2C3	4.00	3.92	3.47	
	SPI2(3)	3.11	3.08	2.80	
	SPI3(3)	3.56	3.36	3.13	
	I2S2	2.89	2.81	2.47	
	I2S3	3.33	3.08	2.80	
	CAN1	6.89	6.42	5.80	
	CAN2	6.67	6.14	5.47	
	DAC(4)	2.89	2.25	2.13	
	WWDG	0.89	0.86	0.80	

Table 35. Peripheral current consumption (continued)

Peripheral		I_{DD}(Typ)(1)			Unit
		Scale 1	Scale 2	Scale 3	
APB2 (up to 90 MHz)	SDIO	8.11	8.75	7.83	µA/MHz
	TIM1	17.11	15.97	14.17	
	TIM8	17.33	16.11	14.33	
	TIM9	7.22	6.67	6.00	
	TIM10	4.56	4.31	3.83	
	TIM11	4.78	4.44	4.00	
	ADC1(5)	4.67	4.31	3.83	
	ADC2(5)	4.78	4.44	4.00	
	ADC3(5)	4.56	4.17	3.67	
	SPI1	1.44	1.39	1.17	
	USART1	4.00	3.75	3.33	
	USART6	4.00	3.75	3.33	
	SPI4	1.44	1.39	1.17	
	SPI5	1.44	1.39	1.17	
	SPI6	1.44	1.39	1.17	
	SYSCFG	0.78	0.69	0.67	
	LCD_TFT	39.89	37.22	33.17	
	SAI1	3.78	3.47	3.17	

1. When the I/O compensation cell is ON, I_{DD} typical value increases by 0.22 mA.
2. The BusMatrix is automatically active when at least one master is ON.
3. To enable an I2S peripheral, first set the I2SMOD bit and then the I2SE bit in the SPI_I2SCFGR register.
4. When the DAC is ON and EN1/2 bits are set in DAC_CR register, add an additional power consumption of 0.8 mA per DAC channel for the analog part.
5. When the ADC is ON (ADON bit set in the ADC_CR2 register), add an additional power consumption of 1.6 mA per ADC for the analog part.

6.3.8 Wakeup time from low-power modes

The wakeup times given in *Table 36* are measured starting from the wakeup event trigger up to the first instruction executed by the CPU:

- For Stop or Sleep modes: the wakeup event is WFE.
- WKUP (PA0) pin is used to wakeup from Standby, Stop and Sleep modes.

All timings are derived from tests performed under ambient temperature and V_{DD}=3.3 V.

Table 36. Low-power mode wakeup timings

Symbol	Parameter	Conditions	Typ(1)	Max(1)	Unit
$t_{WUSLEEP}$(2)	Wakeup from Sleep	-	6	-	CPU clock cycle
t_{WUSTOP}(2)	Wakeup from Stop mode with MR/LP regulator in normal mode	Main regulator is ON	13.6	-	µs
		Main regulator is ON and Flash memory in Deep power down mode	93	111	
		Low power regulator is ON	22	32	
		Low power regulator is ON and Flash memory in Deep power down mode	103	126	
t_{WUSTOP}(2)	Wakeup from Stop mode with MR/LP regulator in Under-drive mode	Main regulator in under-drive mode (Flash memory in Deep power-down mode)	105	128	
		Low power regulator in under-drive mode (Flash memory in Deep power-down mode)	125	155	
tWUSTDBY (2)(3)	Wakeup from Standby mode		318	412	

1. Guaranteed by characterization results.
2. The wakeup times are measured from the wakeup event to the point in which the application code reads the first
3. $t_{WUSTDBY}$ maximum value is given at –40 °C.

6.3.9 External clock source characteristics

High-speed external user clock generated from an external source

In bypass mode the HSE oscillator is switched off and the input pin is a standard I/O. The external clock signal has to respect the *Table 56: I/O static characteristics*. However, the recommended clock input waveform is shown in *Figure 27*.

The characteristics given in *Table 37* result from tests performed using an high-speed external clock source, and under ambient temperature and supply voltage conditions summarized in *Table 17*.

Table 37. High-speed external user clock characteristics

Symbol	Parameter	Conditions	Min	Typ	Max	Unit
f_{HSE_ext}	External user clock source frequency(1)		1	-	50	MHz
V_{HSEH}	OSC_IN input pin high level voltage		$0.7V_{DD}$	-	V_{DD}	V
V_{HSEL}	OSC_IN input pin low level voltage		V_{SS}	-	$0.3V_{DD}$	
$t_{w(HSE)}$ $t_{w(HSE)}$	OSC_IN high or low time(1)		5	-	-	ns
$t_{r(HSE)}$ $t_{f(HSE)}$	OSC_IN rise or fall time(1)		-	-	10	
$C_{in(HSE)}$	OSC_IN input capacitance(1)		-	5	-	pF
$DuCy_{(HSE)}$	Duty cycle		45	-	55	%
I_L	OSC_IN Input leakage current	$V_{SS} \leq V_{IN} \leq V_{DD}$	-	-	±1	µA

1. Guaranteed by design.

Low-speed external user clock generated from an external source

In bypass mode the LSE oscillator is switched off and the input pin is a standard I/O. The external clock signal has to respect the *Table 56: I/O static characteristics*. However, the recommended clock input waveform is shown in *Figure 28*.

The characteristics given in *Table 38* result from tests performed using an low-speed external clock source, and under ambient temperature and supply voltage conditions summarized in *Table 17*.

Table 38. Low-speed external user clock characteristics

Symbol	Parameter	Conditions	Min	Typ	Max	Unit
f_{LSE_ext}	User External clock source frequency(1)		-	32.768	1000	kHz
V_{LSEH}	OSC32_IN input pin high level voltage		$0.7V_{DD}$	-	V_{DD}	V
V_{LSEL}	OSC32_IN input pin low level voltage		V_{SS}	-	$0.3V_{DD}$	
$t_{w(LSE)}$ $t_{f(LSE)}$	OSC32_IN high or low time(1)		450	-	-	ns
$t_{r(LSE)}$ $t_{f(LSE)}$	OSC32_IN rise or fall time(1)		-	-	50	
$C_{in(LSE)}$	OSC32_IN input capacitance(1)		-	5	-	pF
$DuCy_{(LSE)}$	Duty cycle		30	-	70	%
I_L	OSC32_IN Input leakage current	$V_{SS} \leq V_{IN} \leq V_{DD}$	-	-	±1	µA

1. Guaranteed by design.

Figure 27. High-speed external clock source AC timing diagram

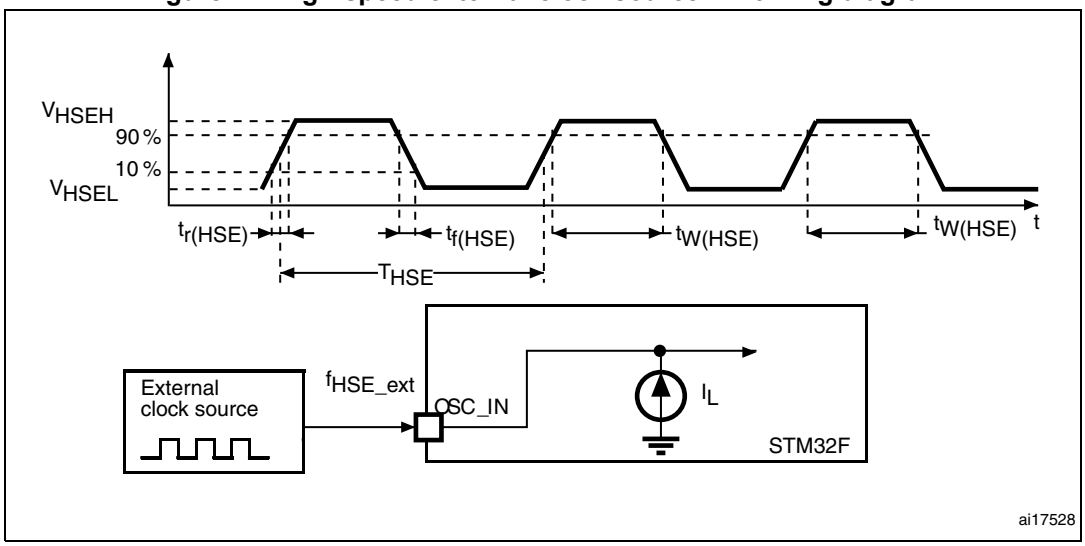

Figure 28. Low-speed external clock source AC timing diagram

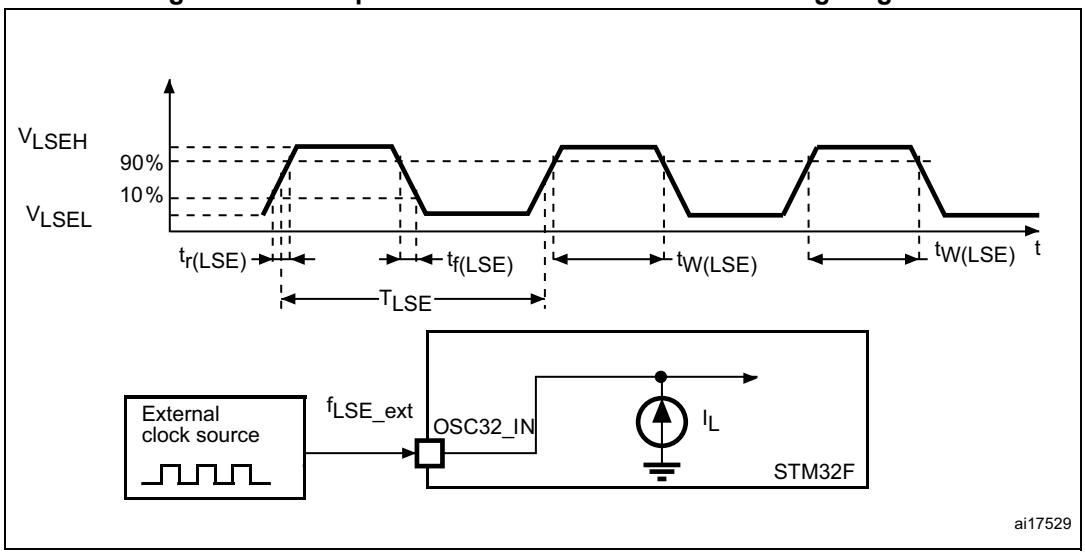

High-speed external clock generated from a crystal/ceramic resonator

The high-speed external (HSE) clock can be supplied with a 4 to 26 MHz crystal/ceramic resonator oscillator. All the information given in this paragraph are based on characterization results obtained with typical external components specified in *Table 39*. In the application, the resonator and the load capacitors have to be placed as close as possible to the oscillator pins in order to minimize output distortion and startup stabilization time. Refer to the crystal resonator manufacturer for more details on the resonator characteristics (frequency, package, accuracy).

Table 39. HSE 4-26 MHz oscillator characteristics (1)

Symbol	Parameter	Conditions	Min	Typ	Max	Unit
f_{OSC_IN}	Oscillator frequency		4	-	26	MHz
R_F	Feedback resistor		-	200	-	kΩ
I_{DD}	HSE current consumption	V_{DD}=3.3 V, ESR= 30 Ω, C_L=5 pF@25 MHz	-	450	-	µA
		V_{DD}=3.3 V, ESR= 30 Ω, C_L=10 pF@25 MHz	-	530	-	
ACC_{HSE} (2)	HSE accuracy		− 500	-	500	ppm
G_m_crit_max	Maximum critical crystal g_m	Startup	-	-	1	mA/V
$t_{SU(HSE}$ (3)	Startup time	V_{DD} is stabilized	-	2	-	ms

1. Guaranteed by design.
2. This parameter depends on the crystal used in the application. The minimum and maximum values must be respected to comply with USB standard specifications.
3. $t_{SU(HSE)}$ is the startup time measured from the moment it is enabled (by software) to a stabilized 8 MHz oscillation is reached. This value is based on characterization and not tested in production. It is measured for a standard crystal resonator and it can vary significantly with the crystal manufacturer.

For C_{L1} and C_{L2}, it is recommended to use high-quality external ceramic capacitors in the 5 pF to 25 pF range (typ.), designed for high-frequency applications, and selected to match the requirements of the crystal or resonator (see *Figure 29*). C_{L1} and C_{L2} are usually the same size. The crystal manufacturer typically specifies a load capacitance which is the series combination of C_{L1} and C_{L2}. PCB and MCU pin capacitance must be included (10 pF can be used as a rough estimate of the combined pin and board capacitance) when sizing C_{L1} and C_{L2}.

Note: For information on selecting the crystal, refer to the application note AN2867 "Oscillator design guide for ST microcontrollers" available from the ST website www.st.com.

Figure 29. Typical application with an 8 MHz crystal

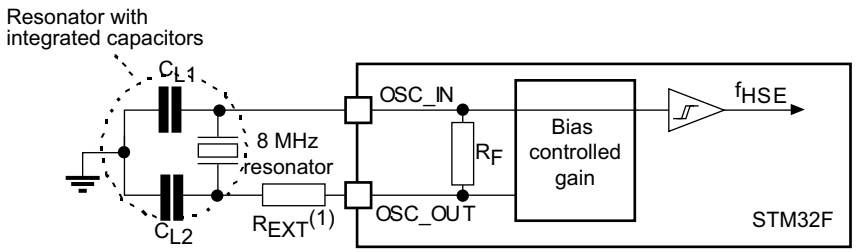

1. R_{EXT} value depends on the crystal characteristics.

Low-speed external clock generated from a crystal/ceramic resonator

The low-speed external (LSE) clock can be supplied with a 32.768 kHz crystal/ceramic resonator oscillator. All the information given in this paragraph are based on characterization results obtained with typical external components specified in *Table 40*. In the application, the resonator and the load capacitors have to be placed as close as possible to the oscillator pins in order to minimize output distortion and startup stabilization time. Refer to the crystal resonator manufacturer for more details on the resonator characteristics (frequency, package, accuracy).

Table 40. LSE oscillator characteristics (f_{LSE} = 32.768 kHz) (1)

Symbol	Parameter	Conditions	Min	Typ	Max	Unit
R_F	Feedback resistor		-	18.4	-	MΩ
I_{DD}	LSE current consumption		-	-	1	µA
ACC_{LSE}(2)	LSE accuracy		− 500	-	500	ppm
G_m_crit_max	Maximum critical crystal g_m	Startup	-	-	0.56	µA/V
$t_{SU(LSE)}$(3)	startup time	V_{DD} is stabilized	-	2	-	s

1. Guaranteed by design.
2. This parameter depends on the crystal used in the application. Refer to application note AN2867.
3. $t_{SU(LSE)}$ is the startup time measured from the moment it is enabled (by software) to a stabilized 32.768 kHz oscillation is reached. This value is based on characterization and not tested in production. It is measured for a standard crystal resonator and it can vary significantly with the crystal manufacturer.

Note: For information on selecting the crystal, refer to the application note AN2867 "Oscillator design guide for ST microcontrollers" available from the ST website www.st.com.

Figure 30. Typical application with a 32.768 kHz crystal

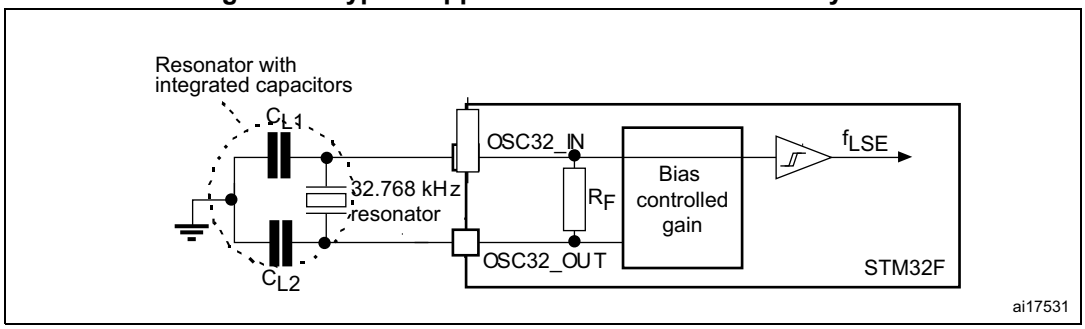

6.3.10 Internal clock source characteristics

The parameters given in *Table 41* and *Table 42* are derived from tests performed under ambient temperature and V_{DD} supply voltage conditions summarized in *Table 17*.

High-speed internal (HSI) RC oscillator

Table 41. HSI oscillator characteristics (1)

Symbol	Parameter	Conditions	Min	Typ	Max	Unit
f_{HSI}	Frequency	-	-	16	-	MHz
ACC_{HSI}	HSI user-trimming step (2)	-	-	-	1	%
	Accuracy of the HSI oscillator	T_A = –40 to 105 °C(3)	− 8	-	4.5	%
		T_A = –10 to 85 °C(3)	− 4	-	4	%
		T_A = 25 °C(4)	− 1	-	1	%
$t_{su(HSI)}$(2)	HSI oscillator startup time	-	-	2.2	4	µs
$I_{DD(HSI)}$(2)	HSI oscillator power consumption	-	-	60	80	µA

1. V_{DD} = 3.3 V, T_A = –40 to 105 °C unless otherwise specified.
2. Guaranteed by design.
3. Guaranteed by characterization results.
4. Factory calibrated, parts not soldered.

Figure 31. ACCHSI accuracy versus temperature

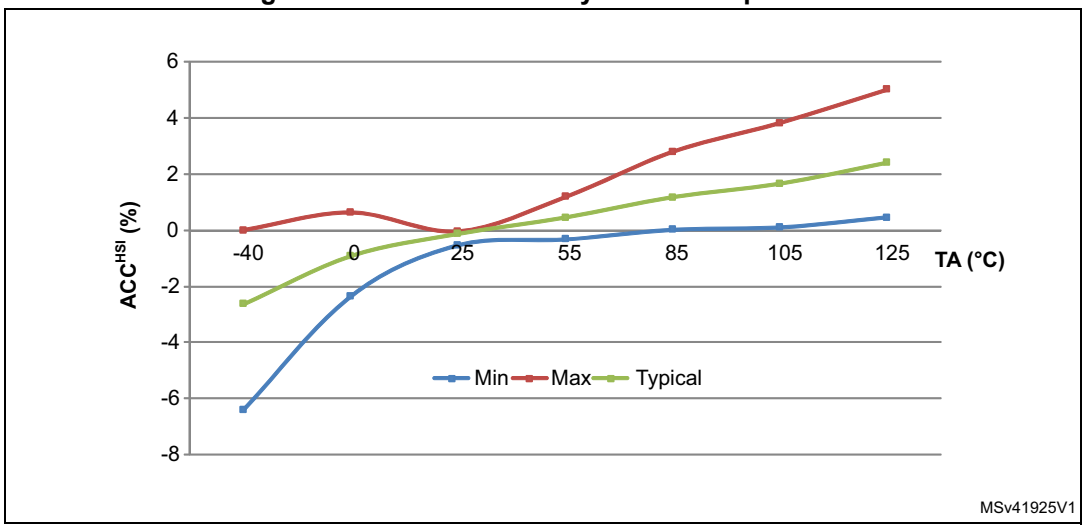

1. Guaranteed by characterization results.

Low-speed internal (LSI) RC oscillator

Table 42. LSI oscillator characteristics (1)

Symbol	Parameter	Min	Typ	Max	Unit
f_{LSI}(2)	Frequency	17	32	47	kHz
$t_{su(LSI)}$(3)	LSI oscillator startup time	-	15	40	µs
$I_{DD(LSI)}$(3)	LSI oscillator power consumption	-	0.4	0.6	µA

1. V_{DD} = 3 V, T_A = –40 to 105 °C unless otherwise specified.
2. Guaranteed by characterization results.
3. Guaranteed by design.

Figure 32. ACC_{LSI} versus temperature

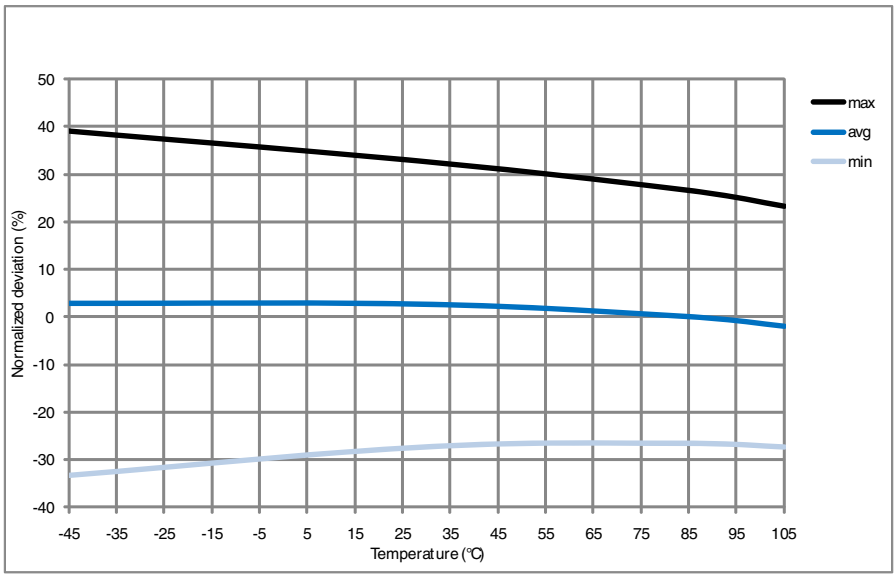

MS19013V1

6.3.11 PLL characteristics

The parameters given in *Table 43* and *Table 44* are derived from tests performed under temperature and V_{DD} supply voltage conditions summarized in *Table 17*.

Table 43. Main PLL characteristics

Symbol	Parameter	Conditions	Min	Typ	Max	Unit
f_{PLL_IN}	PLL input clock(1)		0.95(2)	1	2.10	MHz
f_{PLL_OUT}	PLL multiplier output clock		24	-	180	MHz
f_{PLL48_OUT}	48 MHz PLL multiplier output clock		-	48	75	MHz
f_{VCO_OUT}	PLL VCO output		100	-	432	MHz
t_{LOCK}	PLL lock time	VCO freq = 100 MHz	75	-	200	µs
		VCO freq = 432 MHz	100	-	300	

Table 43. Main PLL characteristics (continued)

Symbol	Parameter	Conditions		Min	Typ	Max	Unit
Jitter(3)	Cycle-to-cycle jitter	System clock 120 MHz	RMS	-	25	-	ps
			peak to peak	-	±150	-	
	Period Jitter		RMS	-	15	-	
			peak to peak	-	±200	-	
	Main clock output (MCO) for RMII Ethernet	Cycle to cycle at 50 MHz on 1000 samples		-	32	-	
	Main clock output (MCO) for MII Ethernet	Cycle to cycle at 25 MHz on 1000 samples		-	40	-	
	Bit Time CAN jitter	Cycle to cycle at 1 MHz on 1000 samples		-	330	-	
$I_{DD(PLL)}$(4)	PLL power consumption on VDD	VCO freq = 100 MHz VCO freq = 432 MHz		0.15 0.45	-	0.40 0.75	mA
$I_{DDA(PLL)}$(4)	PLL power consumption on VDDA	VCO freq = 100 MHz VCO freq = 432 MHz		0.30 0.55	-	0.40 0.85	mA

1. Take care of using the appropriate division factor M to obtain the specified PLL input clock values. The M factor is shared between PLL and PLLI2S.
2. Guaranteed by design.
3. The use of 2 PLLs in parallel could degraded the Jitter up to +30%.
4. Guaranteed by characterization results.

Table 44. PLLI2S (audio PLL) characteristics

Symbol	Parameter	Conditions		Min	Typ	Max	Unit
f_{PLLI2S_IN}	PLLI2S input clock(1)			0.95(2)	1	2.10	MHz
f_{PLLI2S_OUT}	PLLI2S multiplier output clock			-	-	216	MHz
f_{VCO_OUT}	PLLI2S VCO output			100	-	432	MHz
t_{LOCK}	PLLI2S lock time	VCO freq = 100 MHz		75	-	200	µs
		VCO freq = 432 MHz		100	-	300	
Jitter(3)	Master I2S clock jitter	Cycle to cycle at 12.288 MHz on 48KHz period, N=432, R=5	RMS	-	90	-	
			peak to peak	-	±280	-	ps
		Average frequency of 12.288 MHz N = 432, R = 5 on 1000 samples		-	90	-	ps
	WS I2S clock jitter	Cycle to cycle at 48 KHz on 1000 samples		-	400	-	ps

Table 44. PLLI2S (audio PLL) characteristics (continued)

Symbol	Parameter	Conditions	Min	Typ	Max	Unit
$I_{DD(PLLI2S)}$(4)	PLLI2S power consumption on V_{DD}	VCO freq = 100 MHz VCO freq = 432 MHz	0.15 0.45	-	0.40 0.75	mA
$I_{DDA(PLLI2S)}$(4)	PLLI2S power consumption on V_{DDA}	VCO freq = 100 MHz VCO freq = 432 MHz	0.30 0.55	-	0.40 0.85	mA

1. Take care of using the appropriate division factor M to have the specified PLL input clock values.
2. Guaranteed by design.
3. Value given with main PLL running.
4. Guaranteed by characterization results.

Table 45. PLLISAI (audio and LCD-TFT PLL) characteristics

Symbol	Parameter	Conditions		Min	Typ	Max	Unit
f_{PLLSAI_IN}	PLLSAI input clock(1)			0.95(2)	1	2.10	MHz
f_{PLLSAI_OUT}	PLLSAI multiplier output clock			-	-	216	MHz
f_{VCO_OUT}	PLLSAI VCO output			100	-	432	MHz
t_{LOCK}	PLLSAI lock time	VCO freq = 100 MHz		75	-	200	µs
		VCO freq = 432 MHz		100	-	300	
Jitter(3)	Main SAI clock jitter	Cycle to cycle at 12.288 MHz on 48KHz period, N=432, R=5	RMS	-	90	-	
			peak to peak	-	±280	-	ps
		Average frequency of 12.288 MHz N = 432, R = 5 on 1000 samples		-	90	-	ps
	FS clock jitter	Cycle to cycle at 48 KHz on 1000 samples		-	400	-	ps
$I_{DD(PLLSAI)}$(4)	PLLSAI power consumption on V_{DD}	VCO freq = 100 MHz VCO freq = 432 MHz		0.15 0.45	-	0.40 0.75	mA
$I_{DDA(PLLSAI)}$(4)	PLLSAI power consumption on V_{DDA}	VCO freq = 100 MHz VCO freq = 432 MHz		0.30 0.55	-	0.40 0.85	mA

1. Take care of using the appropriate division factor M to have the specified PLL input clock values.
2. Guaranteed by design.
3. Value given with main PLL running.
4. Guaranteed by characterization results.

6.3.12 PLL spread spectrum clock generation (SSCG) characteristics

The spread spectrum clock generation (SSCG) feature allows to reduce electromagnetic interferences (see *Table 52: EMI characteristics*). It is available only on the main PLL.

Table 46. SSCG parameters constraint

Symbol	Parameter	Min	Typ	Max(1)	Unit
f_{Mod}	Modulation frequency	-	-	10	KHz
md	Peak modulation depth	0.25	-	2	%
MODEPER * INCSTEP		-	-	$2^{15} - 1$	-

1. Guaranteed by design.

Equation 1

The frequency modulation period (MODEPER) is given by the equation below:

$$MODEPER = round[f_{PLL_IN} / (4 \times f_{Mod})]$$

f_{PLL_IN} and f_{Mod} must be expressed in Hz.

As an example:

If f_{PLL_IN} = 1 MHz, and f_{MOD} = 1 kHz, the modulation depth (MODEPER) is given by equation 1:

$$MODEPER = round[10^6 / (4 \times 10^3)] = 250$$

Equation 2

Equation 2 allows to calculate the increment step (INCSTEP):

$$INCSTEP = round[((2^{15} - 1) \times md \times PLLN) / (100 \times 5 \times MODEPER)]$$

f_{VCO_OUT} must be expressed in MHz.

With a modulation depth (md) = ±2 % (4 % peak to peak), and PLLN = 240 (in MHz):

$$INCSTEP = round[((2^{15} - 1) \times 2 \times 240) / (100 \times 5 \times 250)] = 126 md(quantitazed)\%$$

An amplitude quantization error may be generated because the linear modulation profile is obtained by taking the quantized values (rounded to the nearest integer) of MODPER and INCSTEP. As a result, the achieved modulation depth is quantized. The percentage quantized modulation depth is given by the following formula:

$$md_{quantized}\% = (MODEPER \times INCSTEP \times 100 \times 5) / ((2^{15} - 1) \times PLLN)$$

As a result:

$$md_{quantized}\% = (250 \times 126 \times 100 \times 5) / ((2^{15} - 1) \times 240) = 2.002\%(peak)$$

Figure 33 and *Figure 34* show the main PLL output clock waveforms in center spread and down spread modes, where:

F0 is f_{PLL_OUT} nominal.

T_{mode} is the modulation period.

md is the modulation depth.

Figure 33. PLL output clock waveforms in center spread mode

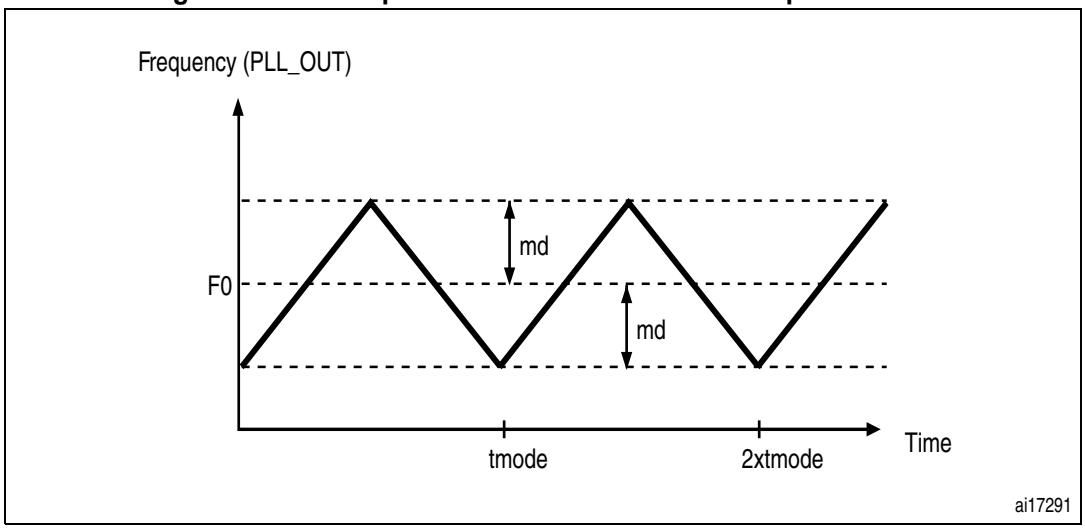

Figure 34. PLL output clock waveforms in down spread mode

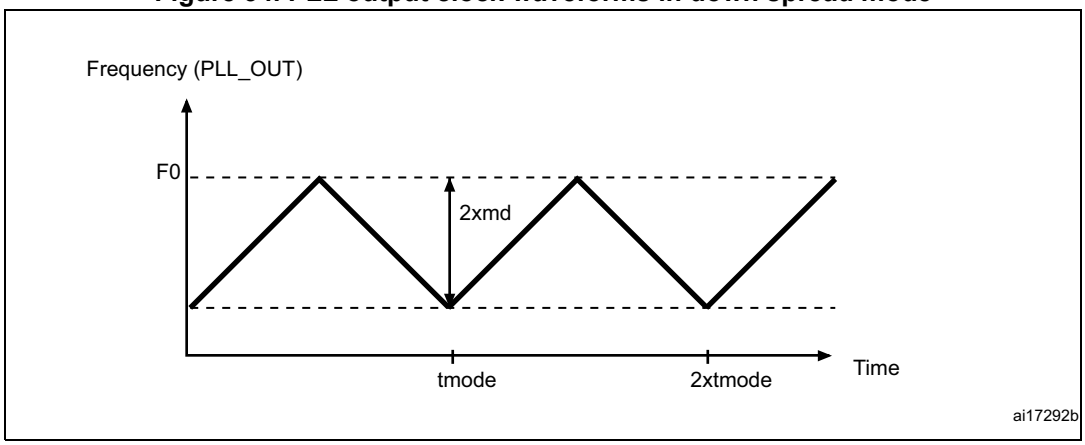

6.3.13 Memory characteristics

Flash memory

The characteristics are given at TA = –40 to 105 °C unless otherwise specified.

The devices are shipped to customers with the Flash memory erased.

Table 47. Flash memory characteristics

Symbol	Parameter	Conditions	Min	Typ	Max	Unit
I_{DD}	Supply current	Write / Erase 8-bit mode, V_{DD} = 1.7 V	-	5	-	mA
		Write / Erase 16-bit mode, V_{DD} = 2.1 V	-	8	-	
		Write / Erase 32-bit mode, V_{DD} = 3.3 V	-	12	-	

Table 48. Flash memory programming

Symbol	Parameter	Conditions	Min(1)	Typ	Max(1)	Unit
t_{prog}	Word programming time	Program/erase parallelism (PSIZE) = x 8/16/32	-	16	100(2)	µs
$t_{ERASE16KB}$	Sector (16 KB) erase time	Program/erase parallelism (PSIZE) = x 8	-	400	800	ms
		Program/erase parallelism (PSIZE) = x 16	-	300	600	
		Program/erase parallelism (PSIZE) = x 32	-	250	500	
$t_{ERASE64KB}$	Sector (64 KB) erase time	Program/erase parallelism (PSIZE) = x 8	-	1200	2400	ms
		Program/erase parallelism (PSIZE) = x 16	-	700	1400	
		Program/erase parallelism (PSIZE) = x 32	-	550	1100	
$t_{ERASE128KB}$	Sector (128 KB) erase time	Program/erase parallelism (PSIZE) = x 8	-	2	4	s
		Program/erase parallelism (PSIZE) = x 16	-	1.3	2.6	
		Program/erase parallelism (PSIZE) = x 32	-	1	2	
t_{ME}	Mass erase time	Program/erase parallelism (PSIZE) = x 8	-	16	32	s
		Program/erase parallelism (PSIZE) = x 16	-	11	22	
		Program/erase parallelism (PSIZE) = x 32	-	8	16	

Table 48. Flash memory programming (continued)

Symbol	Parameter	Conditions	Min(1)	Typ	Max(1)	Unit
t_{BE}	Bank erase time	Program/erase parallelism (PSIZE) = x 8	-	16	32	s
		Program/erase parallelism (PSIZE) = x 16	-	11	22	
		Program/erase parallelism (PSIZE) = x 32	-	8	16	
V_{prog}	Programming voltage	32-bit program operation	2.7	-	3.6	V
		16-bit program operation	2.1	-	3.6	V
		8-bit program operation	1.7	-	3.6	V

1. Guaranteed by characterization results.
2. The maximum programming time is measured after 100K erase operations.

Table 49. Flash memory programming with V_{PP}

Symbol	Parameter	Conditions	Min(1)	Typ	Max(1)	Unit
t_{prog}	Double word programming	T_A = 0 to +40 °C V_{DD} = 3.3 V V_{PP} = 8.5 V	-	16	100(2)	µs
$t_{ERASE16KB}$	Sector (16 KB) erase time		-	230	-	ms
$t_{ERASE64KB}$	Sector (64 KB) erase time		-	490	-	
$t_{ERASE128KB}$	Sector (128 KB) erase time		-	875	-	
t_{ME}	Mass erase time		-	6.9	-	s
t_{BE}	Bank erase time		-	6.9	-	s
V_{prog}	Programming voltage		2.7	-	3.6	V
V_{PP}	V_{PP} voltage range		7	-	9	V
I_{PP}	Minimum current sunk on the V_{PP} pin		10	-	-	mA
t_{VPP}(3)	Cumulative time during which V_{PP} is applied		-	-	1	hour

1. Guaranteed by design.
2. The maximum programming time is measured after 100K erase operations.
3. V_{PP} should only be connected during programming/erasing.

Table 50. Flash memory endurance and data retention

Symbol	Parameter	Conditions	Value	Unit
			Min(1)	
N_{END}	Endurance	T_A = –40 to +85 °C (6 suffix versions) T_A = –40 to +105 °C (7 suffix versions)	10	kcycles
t_{RET}	Data retention	1 kcycle(2) at T_A = 85 °C	30	Years
		1 kcycle(2) at T_A = 105 °C	10	
		10 kcycles(2) at T_A = 55 °C	20	

1. Guaranteed by characterization results.
2. Cycling performed over the whole temperature range.

6.3.14 EMC characteristics

Susceptibility tests are performed on a sample basis during device characterization.

Functional EMS (electromagnetic susceptibility)

While a simple application is executed on the device (toggling 2 LEDs through I/O ports). the device is stressed by two electromagnetic events until a failure occurs. The failure is indicated by the LEDs:

- **Electrostatic discharge (ESD)** (positive and negative) is applied to all device pins until a functional disturbance occurs. This test is compliant with the IEC 61000-4-2 standard.
- **FTB**: A burst of fast transient voltage (positive and negative) is applied to V_{DD} and V_{SS} through a 100 pF capacitor, until a functional disturbance occurs. This test is compliant with the IEC 61000-4-4 standard.

A device reset allows normal operations to be resumed.

The test results are given in *Table 51*. They are based on the EMS levels and classes defined in application note AN1709.

Table 51. EMS characteristics

Symbol	Parameter	Conditions	Level/ Class
V_{FESD}	Voltage limits to be applied on any I/O pin to induce a functional disturbance	V_{DD} = 3.3 V, LQFP176, T_A = +25 °C, f_{HCLK} = 168 MHz, conforms to IEC 61000-4-2	2B
V_{EFTB}	Fast transient voltage burst limits to be applied through 100 pF on V_{DD} and V_{SS} pins to induce a functional disturbance	V_{DD} = 3.3 V, LQFP176, T_A =+25 °C, f_{HCLK} = 168 MHz, conforms to IEC 61000-4-2	4A

When the application is exposed to a noisy environment, it is recommended to avoid pin exposition to disturbances. The pins showing a middle range robustness are: PA0, PA1, PA2, PH2, PH3, PH4, PH5, PA3, PA4, PA5, PA6, PA7, PC4, and PC5.

As a consequence, it is recommended to add a serial resistor (1 kΩ) located as close as possible to the MCU to the pins exposed to noise (connected to tracks longer than 50 mm on PCB).

Designing hardened software to avoid noise problems

EMC characterization and optimization are performed at component level with a typical application environment and simplified MCU software. It should be noted that good EMC performance is highly dependent on the user application and the software in particular.

Therefore it is recommended that the user applies EMC software optimization and prequalification tests in relation with the EMC level requested for his application.

Software recommendations

The software flowchart must include the management of runaway conditions such as:

- Corrupted program counter
- Unexpected reset
- Critical Data corruption (control registers...)

Prequalification trials

Most of the common failures (unexpected reset and program counter corruption) can be reproduced by manually forcing a low state on the NRST pin or the Oscillator pins for 1 second.

To complete these trials, ESD stress can be applied directly on the device, over the range of specification values. When unexpected behavior is detected, the software can be hardened to prevent unrecoverable errors occurring (see application note AN1015).

Electromagnetic Interference (EMI)

The electromagnetic field emitted by the device are monitored while a simple application, executing EEMBC? code, is running. This emission test is compliant with SAE IEC61967-2 standard which specifies the test board and the pin loading.

Table 52. EMI characteristics

Symbol	Parameter	Conditions	Monitored frequency band	Max vs. [f_{HSE}/f_{CPU}] 25/168 MHz	Max vs. [f_{HSE}/f_{CPU}] 25/180 MHz	Unit
S_{EMI}	Peak level	V_{DD} = 3.3 V, T_A = 25 °C, LQFP176 package, conforming to SAE J1752/3 EEMBC, ART ON, all peripheral clocks enabled, clock dithering disabled.	0.1 to 30 MHz	16	19	dBµV
			30 to 130 MHz	23	23	
			130 MHz to 1GHz	25	22	
			SAE EMI Level	4	4	-
		V_{DD} = 3.3 V, T_A = 25 °C, LQFP176 package, conforming to SAE J1752/3 EEMBC, ART ON, all peripheral clocks enabled, clock dithering enabled	0.1 to 30 MHz	17	16	dBµV
			30 to 130 MHz	8	10	
			130 MHz to 1GHz	11	16	
			SAE EMI level	3.5	3.5	-

6.3.15 Absolute maximum ratings (electrical sensitivity)

Based on three different tests (ESD, LU) using specific measurement methods, the device is stressed in order to determine its performance in terms of electrical sensitivity.

Electrostatic discharge (ESD)

Electrostatic discharges (a positive then a negative pulse separated by 1 second) are applied to the pins of each sample according to each pin combination. The sample size depends on the number of supply pins in the device (3 parts × (n+1) supply pins). This test conforms to the ANSI/ESDA/JEDEC JS-001 and ANSI/ESD S5.3.1 standards.

Table 53. ESD absolute maximum ratings

Symbol	Ratings	Conditions	Class	Maximum value(1)	Unit
$V_{ESD(HBM)}$	Electrostatic discharge voltage (human body model)	T_A = +25 °C conforming to ANSI/ESDA/JEDEC JS-001	2	2000	V
$V_{ESD(CDM)}$	Electrostatic discharge voltage (charge device model)	T_A = +25 °C conforming to ANSI/ESD S5.3.1, LQFP100/144/176, UFBGA169/176, TFBGA176 and WLCSP143 packages	C3	250	
		T_A = +25 °C conforming to ANSI/ESD S5.3.1, LQFP208 package	C3	250	

1. Guaranteed by characterization results.

Static latchup

Two complementary static tests are required on six parts to assess the latchup performance:

- A supply overvoltage is applied to each power supply pin
- A current injection is applied to each input, output and configurable I/O pin

These tests are compliant with EIA/JESD 78A IC latchup standard.

Table 54. Electrical sensitivities

Symbol	Parameter	Conditions	Class
LU	Static latch-up class	T_A = +105 °C conforming to JESD78A	II level A

6.3.16 I/O current injection characteristics

As a general rule, current injection to the I/O pins, due to external voltage below V_{SS} or above V_{DD} (for standard, 3 V-capable I/O pins) should be avoided during normal product operation. However, in order to give an indication of the robustness of the microcontroller in cases when abnormal injection accidentally happens, susceptibility tests are performed on a sample basis during device characterization.

Functional susceptibilty to I/O current injection

While a simple application is executed on the device, the device is stressed by injecting current into the I/O pins programmed in floating input mode. While current is injected into the I/O pin, one at a time, the device is checked for functional failures.

The failure is indicated by an out of range parameter: ADC error above a certain limit (>5 LSB TUE), out of conventional limits of induced leakage current on adjacent pins (out of –5 µA/+0 µA range), or other functional failure (for example reset, oscillator frequency deviation).

Negative induced leakage current is caused by negative injection and positive induced leakage current by positive injection.

The test results are given in *Table 55*.

Table 55. I/O current injection susceptibility(1)

Symbol	Description	Functional susceptibility		Unit
		Negative injection	Positive injection	
I_{INJ}	Injected current on BOOT0 pin	− 0	NA	mA
	Injected current on NRST pin	− 0	NA	
	Injected current on PA0, PA1, PA2, PA3, PA6, PA7, PB0, PC0, PC1, PC2, PC3, PC4, PC5, PH1, PH2, PH3, PH4, PH5	− 0	NA	
	Injected current on TTa pins: PA4 and PA5	− 0	+5	
	Injected current on any other FT pin	− 5	NA	

1. NA = not applicable.

Note: It is recommended to add a Schottky diode (pin to ground) to analog pins which may potentially inject negative currents.

6.3.17 I/O port characteristics

General input/output characteristics

Unless otherwise specified, the parameters given in *Table 56: I/O static characteristics* are derived from tests performed under the conditions summarized in *Table 17*. All I/Os are CMOS and TTL compliant.

Table 56. I/O static characteristics

Symbol	Parameter	Conditions	Min	Typ	Max	Unit
V_{IL}	FT, TTa and NRST I/O input low level voltage	1.7 V≤V_{DD}≤3.6 V	-	-	$0.35V_{DD} - 0.04$ (1)	V
					$0.3V_{DD}$ (2)	
	BOOT0 I/O input low level voltage	1.75 V≤V_{DD} ≤3.6 V, –40 °C≤T_A ≤105 °C	-	-	$0.1V_{DD}+0.1$ (1)	
		1.7 V≤V_{DD} ≤3.6 V, 0 °C≤T_A ≤105 °C	-	-		
V_{IH}	FT, TTa and NRST I/O input high level voltage (5)	1.7 V≤V_{DD}≤3.6 V	$0.45V_{DD}+0.3$ (1)	-	-	V
			$0.7V_{DD}$ (2)			
	BOOT0 I/O input high level voltage	1.75 V≤V_{DD} ≤3.6 V, –40 °C≤T_A ≤105 °C	$0.17V_{DD}+0.7$ (1)	-	-	
		1.7 V≤V_{DD} ≤3.6 V, 0 °C≤T_A ≤105 °C				
V_{HYS}	FT, TTa and NRST I/O input hysteresis	1.7 V≤V_{DD}≤3.6 V	10%V_{DD} (3)	-	-	V
	BOOT0 I/O input hysteresis	1.75 V≤V_{DD} ≤3.6 V, –40 °C≤T_A ≤105 °C	0.1	-	-	
		1.7 V≤V_{DD} ≤3.6 V, 0 °C≤T_A ≤105 °C				
I_{lkg}	I/O input leakage current (4)	V_{SS} ≤V_{IN} ≤V_{DD}	-	-	±1	µA
	I/O FT input leakage current (5)	V_{IN} = 5 V	-	-	3	

Table 56. I/O static characteristics (continued)

Symbol	Parameter		Conditions	Min	Typ	Max	Unit
R_{PU}	Weak pull-up equivalent resistor(6)	All pins except for PA10/PB12 (OTG_FS_ID, OTG_HS_ID)	$V_{IN} = V_{SS}$	30	40	50	kΩ
		PA10/PB12 (OTG_FS_ID, OTG_HS_ID)		7	10	14	
R_{PD}	Weak pull-down equivalent resistor(7)	All pins except for PA10/PB12 (OTG_FS_ID, OTG_HS_ID)	$V_{IN} = V_{DD}$	30	40	50	
		PA10/PB12 (OTG_FS_ID, OTG_HS_ID)		7	10	14	
C_{IO}(8)	I/O pin capacitance		-	-	5	-	pF

1. Guaranteed by design.
2. Tested in production.
3. With a minimum of 200 mV.
4. Leakage could be higher than the maximum value, if negative current is injected on adjacent pins, Refer to *Table 55: I/O current injection susceptibility*
5. To sustain a voltage higher than VDD +0.3 V, the internal pull-up/pull-down resistors must be disabled. Leakage could be higher than the maximum value, if negative current is injected on adjacent pins.Refer to *Table 55: I/O current injection susceptibility*
6. Pull-up resistors are designed with a true resistance in series with a switchable PMOS. This PMOS contribution to the series resistance is minimum (~10% order).
7. Pull-down resistors are designed with a true resistance in series with a switchable NMOS. This NMOS contribution to the series resistance is minimum (~10% order).
8. Hysteresis voltage between Schmitt trigger switching levels. Guaranteed by characterization results.

All I/Os are CMOS and TTL compliant (no software configuration required). Their characteristics cover more than the strict CMOS-technology or TTL parameters. The coverage of these requirements for FT I/Os is shown in *Figure 35*.

Figure 35. FT I/O input characteristics

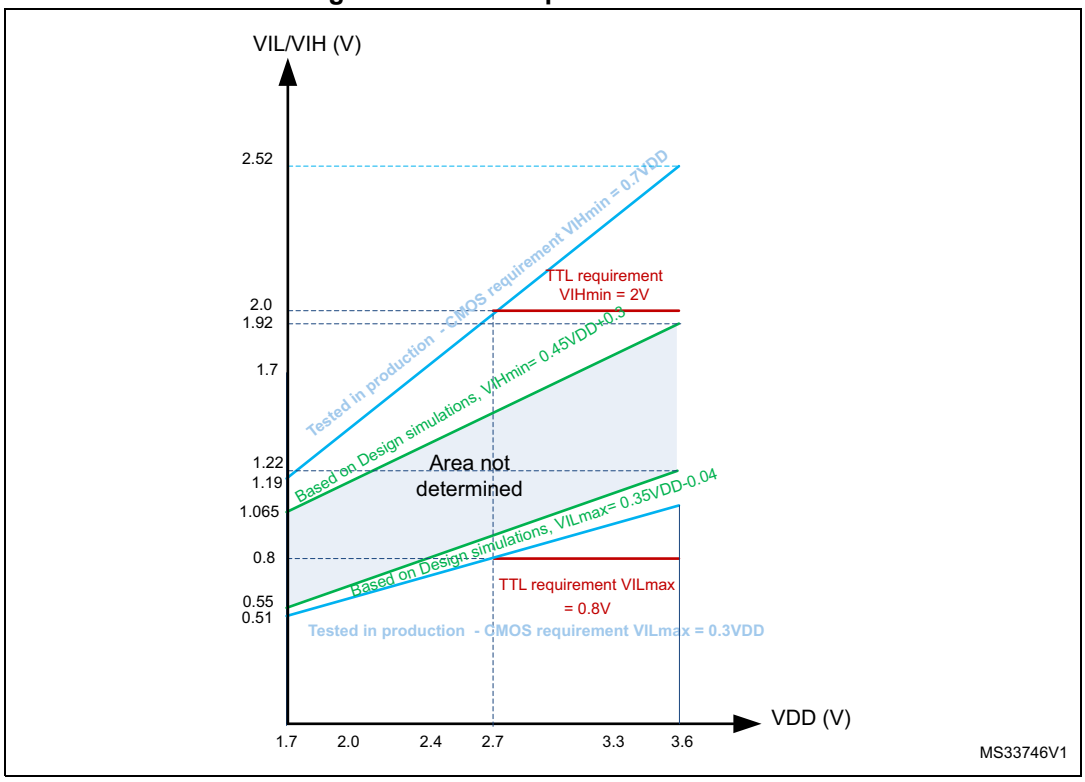

Output driving current

The GPIOs (general purpose input/outputs) can sink or source up to ±8 mA, and sink or source up to ±20 mA (with a relaxed V_{OL}/V_{OH}) except PC13, PC14, PC15 and PI8 which can sink or source up to ±3mA. When using the PC13 to PC15 and PI8 GPIOs in output mode, the speed should not exceed 2 MHz with a maximum load of 30 pF.

In the user application, the number of I/O pins which can drive current must be limited to respect the absolute maximum rating specified in *Section 6.2*. In particular:

- The sum of the currents sourced by all the I/Os on $V_{DD,}$ plus the maximum Run consumption of the MCU sourced on $V_{DD,}$ cannot exceed the absolute maximum rating ΣI_{VDD} (see *Table 15*).
- The sum of the currents sunk by all the I/Os on V_{SS} plus the maximum Run consumption of the MCU sunk on V_{SS} cannot exceed the absolute maximum rating ΣI_{VSS} (see *Table 15*).

Output voltage levels

Unless otherwise specified, the parameters given in *Table 57* are derived from tests performed under ambient temperature and V_{DD} supply voltage conditions summarized in *Table 17*. All I/Os are CMOS and TTL compliant.

Table 57. Output voltage characteristics

Symbol	Parameter	Conditions	Min	Max	Unit
V_{OL}(1)	Output low level voltage for an I/O pin	CMOS port(2) I_{IO} = +8 mA 2.7 V ≤V_{DD} ≤3.6 V	-	0.4	V
V_{OH}(3)	Output high level voltage for an I/O pin		V_{DD} − 0.4	-	
V_{OL} (1)	Output low level voltage for an I/O pin	TTL port(2) I_{IO} =+ 8mA 2.7 V ≤V_{DD} ≤3.6 V	-	0.4	V
V_{OH} (3)	Output high level voltage for an I/O pin		2.4	-	
V_{OL}(1)	Output low level voltage for an I/O pin	I_{IO} = +20 mA 2.7 V ≤V_{DD} ≤3.6 V	-	1.3(4)	V
V_{OH}(3)	Output high level voltage for an I/O pin		V_{DD}−1.3(4)	-	
V_{OL}(1)	Output low level voltage for an I/O pin	I_{IO} = +6 mA 1.8 V ≤V_{DD} ≤3.6 V	-	0.4(4)	V
V_{OH}(3)	Output high level voltage for an I/O pin		V_{DD}−0.4(4)	-	
V_{OL}(1)	Output low level voltage for an I/O pin	I_{IO} = +4 mA 1.7 V ≤V_{DD} ≤3.6V	-	0.4(5)	V
V_{OH}(3)	Output high level voltage for an I/O pin		V_{DD}−0.4(5)	-	

1. The I_{IO} current sunk by the device must always respect the absolute maximum rating specified in *Table 15*. and the sum of I_{IO} (I/O ports and control pins) must not exceed I_{VSS}.
2. TTL and CMOS outputs are compatible with JEDEC standards JESD36 and JESD52.
3. The I_{IO} current sourced by the device must always respect the absolute maximum rating specified in *Table 15* and the sum of I_{IO} (I/O ports and control pins) must not exceed I_{VDD}.
4. Based on characterization data.
5. Guaranteed by design.

Input/output AC characteristics

The definition and values of input/output AC characteristics are given in *Figure 36* and *Table 58*, respectively.

Unless otherwise specified, the parameters given in *Table 58* are derived from tests performed under the ambient temperature and V_{DD} supply voltage conditions summarized in *Table 17*.

Table 58. I/O AC characteristics(1)(2)

OSPEEDRy [1:0] bit value(1)	Symbol	Parameter	Conditions	Min	Typ	Max	Unit
00	$f_{max(IO)out}$	Maximum frequency(3)	C_L = 50 pF, $V_{DD} \geq$ 2.7 V	-	-	4	MHz
			C_L = 50 pF, $V_{DD} \geq$ 1.7 V	-	-	2	
			C_L = 10 pF, $V_{DD} \geq$ 2.7 V	-	-	8	
			C_L = 10 pF, $V_{DD} \geq$ 1.8 V	-	-	4	
			C_L = 10 pF, $V_{DD} \geq$ 1.7 V	-	-	3	
	$t_{f(IO)out}$/ $t_{r(IO)out}$	Output high to low level fall time and output low to high level rise time	C_L = 50 pF, V_{DD} = 1.7 V to 3.6 V	-	-	100	ns
01	$f_{max(IO)out}$	Maximum frequency(3)	C_L = 50 pF, $V_{DD} \geq$ 2.7 V	-	-	25	MHz
			C_L = 50 pF, $V_{DD} \geq$ 1.8 V	-	-	12.5	
			C_L = 50 pF, $V_{DD} \geq$ 1.7 V	-	-	10	
			C_L = 10 pF, $V_{DD} \geq$ 2.7 V	-	-	50	
			C_L = 10 pF, $V_{DD} \geq$ 1.8 V	-	-	20	
			C_L = 10 pF, $V_{DD} \geq$ 1.7 V	-	-	12.5	
	$t_{f(IO)out}$/ $t_{r(IO)out}$	Output high to low level fall time and output low to high level rise time	C_L = 50 pF, $V_{DD} \geq$ 2.7 V	-	-	10	ns
			C_L = 10 pF, $V_{DD} \geq$ 2.7 V	-	-	6	
			C_L = 50 pF, $V_{DD} \geq$ 1.7 V	-	-	20	
			C_L = 10 pF, $V_{DD} \geq$ 1.7 V	-	-	10	
10	$f_{max(IO)out}$	Maximum frequency(3)	C_L = 40 pF, $V_{DD} \geq$ 2.7 V	-	-	50(4)	MHz
			C_L = 10 pF, $V_{DD} \geq$ 2.7 V	-	-	100(4)	
			C_L = 40 pF, $V_{DD} \geq$ 1.7 V	-	-	25	
			C_L = 10 pF, $V_{DD} \geq$ 1.8 V	-	-	50	
			C_L = 10 pF, $V_{DD} \geq$ 1.7 V	-	-	42.5	
	$t_{f(IO)out}$/ $t_{r(IO)out}$	Output high to low level fall time and output low to high level rise time	C_L = 40 pF, $V_{DD} \geq$2.7 V	-	-	6	ns
			C_L = 10 pF, $V_{DD} \geq$ 2.7 V	-	-	4	
			C_L = 40 pF, $V_{DD} \geq$ 1.7 V	-	-	10	
			C_L = 10 pF, $V_{DD} \geq$ 1.7 V	-	-	6	

Table 58. I/O AC characteristics(1)(2) (continued)

OSPEEDRy [1:0] bit value(1)	Symbol	Parameter	Conditions	Min	Typ	Max	Unit
11	$f_{max(IO)out}$	Maximum frequency(3)	C_L = 30 pF, $V_{DD} \geq$ 2.7 V	-	-	100(4)	MHz
			C_L = 30 pF, $V_{DD} \geq$ 1.8 V	-	-	50	
			C_L = 30 pF, $V_{DD} \geq$ 1.7 V	-	-	42.5	
			C_L = 10 pF, $V_{DD} \geq$ 2.7 V	-	-	180(4)	
			C_L = 10 pF, $V_{DD} \geq$ 1.8 V	-	-	100	
			C_L = 10 pF, $V_{DD} \geq$ 1.7 V	-	-	72.5	
	$t_{f(IO)out}$/ $t_{r(IO)out}$	Output high to low level fall time and output low to high level rise time	C_L = 30 pF, $V_{DD} \geq$ 2.7 V	-	-	4	ns
			C_L = 30 pF, $V_{DD} \geq$1.8 V	-	-	6	
			C_L = 30 pF, $V_{DD} \geq$1.7 V	-	-	7	
			C_L = 10 pF, $V_{DD} \geq$ 2.7 V	-	-	2.5	
			C_L = 10 pF, $V_{DD} \geq$1.8 V	-	-	3.5	
			C_L = 10 pF, $V_{DD} \geq$1.7 V	-	-	4	
-	tEXTIpw	Pulse width of external signals detected by the EXTI controller	-	10	-	-	ns

1. Guaranteed by design.
2. The I/O speed is configured using the OSPEEDRy[1:0] bits. Refer to the STM32F4xx reference manual for a description of the GPIOx_SPEEDR GPIO port output speed register.
3. The maximum frequency is defined in *Figure 36*.
4. For maximum frequencies above 50 MHz and V_{DD} > 2.4 V, the compensation cell should be used.

Figure 36. I/O AC characteristics definition

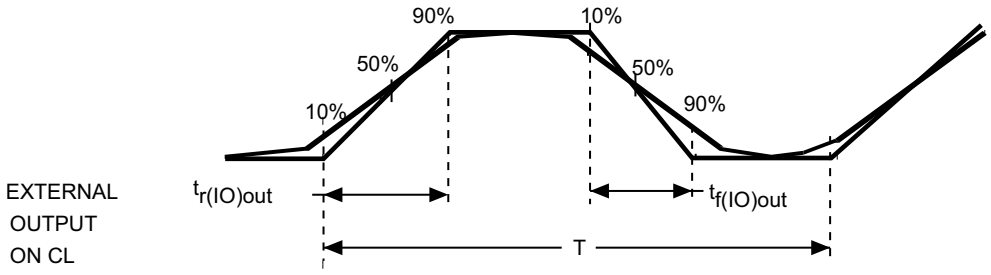

Maximum frequency is achieved if (t_r + t_f) ≤ (2/3)T and if the duty cycle is (45-55%) when loaded by CL specified in the table " *I/O AC characteristics*".

ai14131d

6.3.18 NRST pin characteristics

The NRST pin input driver uses CMOS technology. It is connected to a permanent pull-up resistor, R_{PU} (see *Table 56: I/O static characteristics*).

Unless otherwise specified, the parameters given in *Table 59* are derived from tests performed under the ambient temperature and V_{DD} supply voltage conditions summarized in *Table 17*.

Table 59. NRST pin characteristics

Symbol	Parameter	Conditions	Min	Typ	Max	Unit
R_{PU}	Weak pull-up equivalent resistor(1)	$V_{IN} = V_{SS}$	30	40	50	kΩ
$V_{F(NRST)}$(2)	NRST Input filtered pulse		-	-	100	ns
$V_{NF(NRST)}$(2)	NRST Input not filtered pulse	$V_{DD} > 2.7$ V	300	-	-	ns
T_{NRST_OUT}	Generated reset pulse duration	Internal Reset source	20	-	-	µs

1. The pull-up is designed with a true resistance in series with a switchable PMOS. This PMOS contribution to the series resistance must be minimum (~10% order).
2. Guaranteed by design.

Figure 37. Recommended NRST pin protection

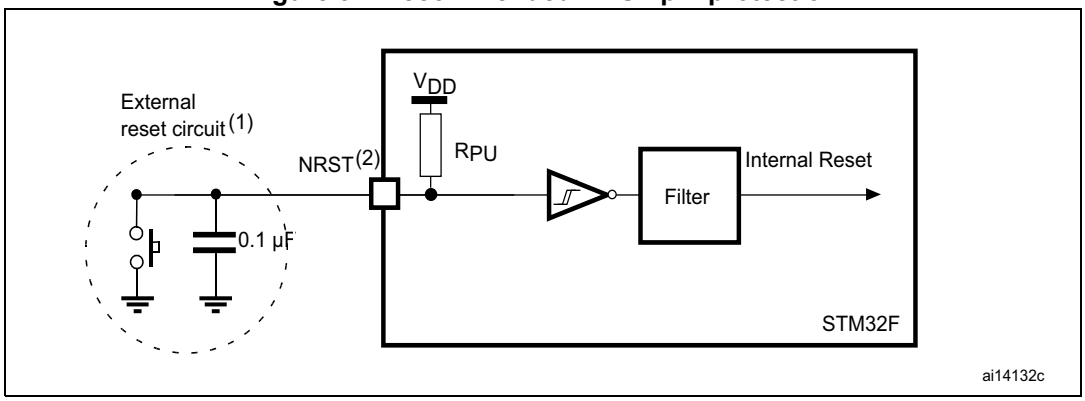

1. The reset network protects the device against parasitic resets.
2. The external capacitor must be placed as close as possible to the device.
3. The user must ensure that the level on the NRST pin can go below the $V_{IL(NRST)}$ max level specified in *Table 59*. Otherwise the reset is not taken into account by the device.

6.3.19 TIM timer characteristics

The parameters given in *Table 60* are guaranteed by design.

Refer to *Section 6.3.17: I/O port characteristics* for details on the input/output alternate function characteristics (output compare, input capture, external clock, PWM output).

Table 60. TIMx characteristics(1)(2)

Symbol	Parameter	Conditions(3)	Min	Max	Unit
$t_{res(TIM)}$	Timer resolution time	AHB/APBx prescaler=1 or 2 or 4, $f_{TIMxCLK}$ = 180 MHz	1	-	$t_{TIMxCLK}$
		AHB/APBx prescaler>4, $f_{TIMxCLK}$ = 90 MHz	1	-	$t_{TIMxCLK}$
f_{EXT}	Timer external clock frequency on CH1 to CH4	$f_{TIMxCLK}$ = 180 MHz	0	$f_{TIMxCLK}/2$	MHz
Res_{TIM}	Timer resolution		-	16/32	bit
t_{MAX_COUNT}	Maximum possible count with 32-bit counter		-	65536 × 65536	$t_{TIMxCLK}$

1. TIMx is used as a general term to refer to the TIM1 to TIM12 timers.
2. Guaranteed by design.
3. The maximum timer frequency on APB1 or APB2 is up to 180 MHz, by setting the TIMPRE bit in the RCC_DCKCFGR register, if APBx prescaler is 1 or 2 or 4, then TIMxCLK = HCKL, otherwise TIMxCLK = 4x PCLKx.

6.3.20 Communications interfaces

I²C interface characteristics

The I²C interface meets the timings requirements of the I²C-bus specification and user manual rev. 03 for:

- Standard-mode (Sm): with a bit rate up to 100 kbit/s
- Fast-mode (Fm): with a bit rate up to 400 kbit/s.

The I²C timings requirements are guaranteed by design when the I2C peripheral is properly configured (refer to RM0090 reference manual).

The SDA and SCL I/O requirements are met with the following restrictions: the SDA and SCL I/O pins are not “true” open-drain. When configured as open-drain, the PMOS connected between the I/O pin and V_{DD} is disabled, but is still present. Refer to *Section 6.3.17: I/O port characteristics* for more details on the I²C I/O characteristics.

All I²C SDA and SCL I/Os embed an analog filter. Refer to the table below for the analog filter characteristics:

Table 61. I2C analog filter characteristics(1)

Symbol	Parameter	Min	Max	Unit
t_{AF}	Maximum pulse width of spikes that are suppressed by the analog filter	50(2)	260(3)	ns

1. Guaranteed by design.
2. Spikes with widths below $t_{AF(min)}$ are filtered.
3. Spikes with widths above $t_{AF(max)}$ are not filtered

SPI interface characteristics

Unless otherwise specified, the parameters given in *Table 62* for the SPI interface are derived from tests performed under the ambient temperature, f_{PCLKx} frequency and V_{DD} supply voltage conditions summarized in *Table 17*, with the following configuration:

- Output speed is set to OSPEEDRy[1:0] = 10
- Capacitive load C = 30 pF
- Measurement points are done at CMOS levels: $0.5V_{DD}$

Refer to *Section 6.3.17: I/O port characteristics* for more details on the input/output alternate function characteristics (NSS, SCK, MOSI, MISO for SPI).

Table 62. SPI dynamic characteristics(1)

Symbol	Parameter	Conditions		Min	Typ	Max	Unit
f_{SCK} $1/t_{c(SCK)}$	SPI clock frequency	Master mode, SPI1/4/5/6, 2.7 V≤V_{DD}≤3.6 V		-	-	45	MHz
		Slave mode, SPI1/4/5/6, 2.7 V≤V_{DD}≤3.6 V	Receiver			45	
			Transmitter/ full-duplex			38(2)	
		Master mode, SPI1/2/3/4/5/6, 1.7 V≤V_{DD}≤3.6 V		-	-	22.5	
		Slave mode, SPI1/2/3/4/5/6, 1.7 V≤V_{DD}≤3.6 V				22.5	
Duty(SCK)	Duty cycle of SPI clock frequency	Slave mode		30	50	70	%

Table 62. SPI dynamic characteristics(1) (continued)

Symbol	Parameter	Conditions	Min	Typ	Max	Unit
$t_{w(SCKH)}$	SCK high and low time	Master mode, SPI presc = 2, 2.7 V≤V_{DD}≤3.6 V	T_{PCLK} − 0.5	T_{PCLK}	T_{PCLK}+0.5	ns
$t_{w(SCKL)}$		Master mode, SPI presc = 2, 1.7 V≤V_{DD}≤3.6 V	T_{PCLK} − 2	T_{PCLK}	T_{PCLK}+2	
$t_{su(NSS)}$	NSS setup time	Slave mode, SPI presc = 2	$4T_{PCLK}$	-	-	
$t_{h(NSS)}$	NSS hold time	Slave mode, SPI presc = 2	$2T_{PCLK}$			
$t_{su(MI)}$	Data input setup time	Master mode	3	-	-	
$t_{su(SI)}$		Slave mode	0	-	-	
$t_{h(MI)}$	Data input hold time	Master mode	0.5	-	-	
$t_{h(SI)}$		Slave mode	2	-	-	
$t_{a(SO)}$	Data output access time	Slave mode, SPI presc = 2	0	-	$4T_{PCLK}$	
$t_{dis(SO)}$	Data output disable time	Slave mode, SPI1/4/5/6, 2.7 V≤V_{DD}≤3.6 V	0	-	8.5	
		Slave mode, SPI1/2/3/4/5/6 and 1.7 V≤V_{DD}≤3.6 V	0	-	16.5	
$t_{v(SO)}$ $t_{h(SO)}$	Data output valid/hold time	Slave mode (after enable edge), SPI1/4/5/6 and 2.7V ≤ V_{DD} ≤ 3.6V	-	11	13	ns
		Slave mode (after enable edge), SPI2/3, 2.7 V≤V_{DD}≤3.6 V	-	14	15	
		Slave mode (after enable edge), SPI1/4/5/6, 1.7 V≤V_{DD}≤3.6 V	-	15.5	19	
		Slave mode (after enable edge), SPI2/3, 1.7 V≤V_{DD}≤3.6 V	-	15.5	17.5	
$t_{v(MO)}$	Data output valid time	Master mode (after enable edge), SPI1/4/5/6, 2.7 V≤V_{DD}≤3.6 V	-	-	2.5	
		Master mode (after enable edge), SPI1/2/3/4/5/6, 1.7 V≤V_{DD}≤3.6 V	-	-	4.5	
$t_{h(MO)}$	Data output hold time	Master mode (after enable edge)	0	-	-	

1. Guaranteed by characterization results.
2. Maximum frequency in Slave transmitter mode is determined by the sum of $t_{v(SO)}$ and $t_{su(MI)}$ which has to fit into SCK low or high phase preceding the SCK sampling edge. This value can be achieved when the SPI communicates with a master having $t_{su(MI)}$ = 0 while Duty(SCK) = 50%

Figure 38. SPI timing diagram - slave mode and CPHA = 0

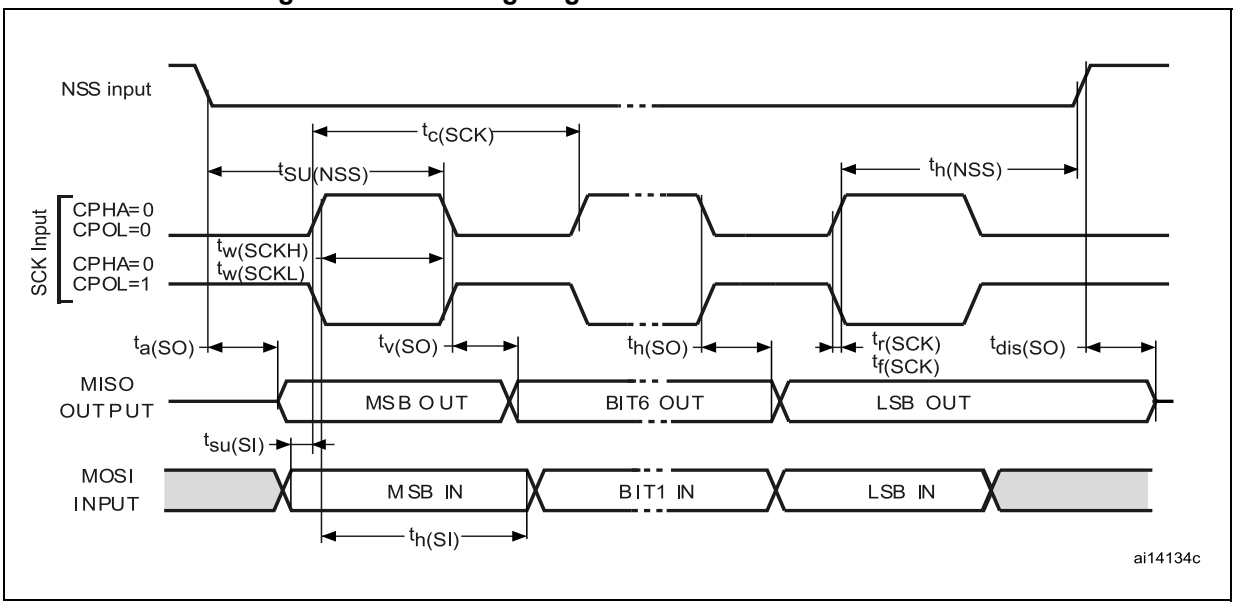

Figure 39. SPI timing diagram - slave mode and CPHA = 1

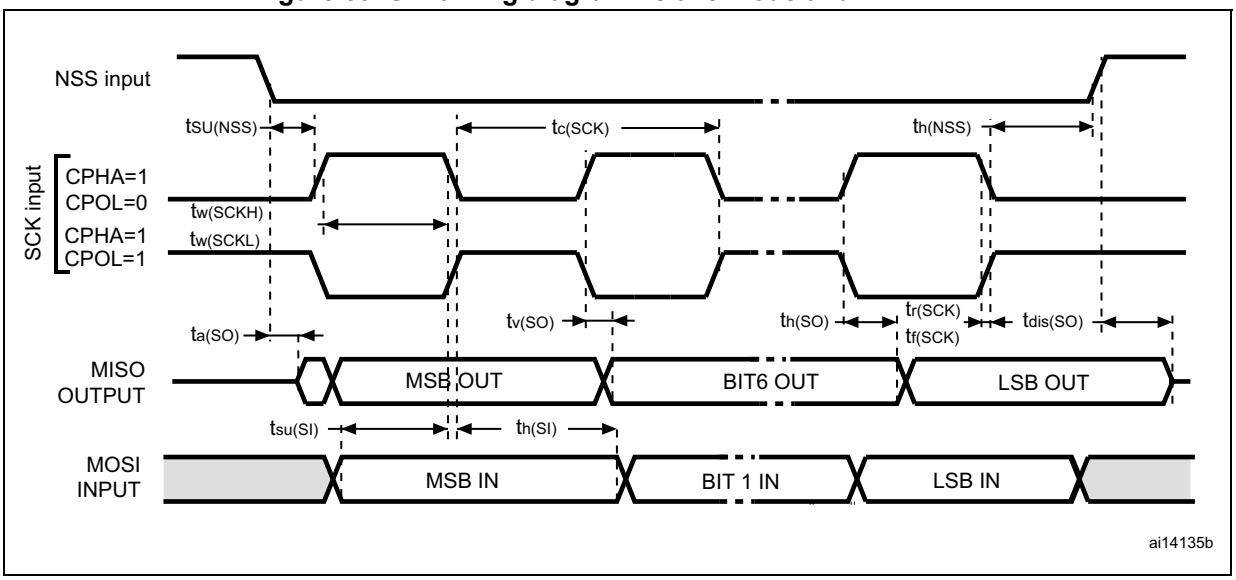

Figure 40. SPI timing diagram - master mode

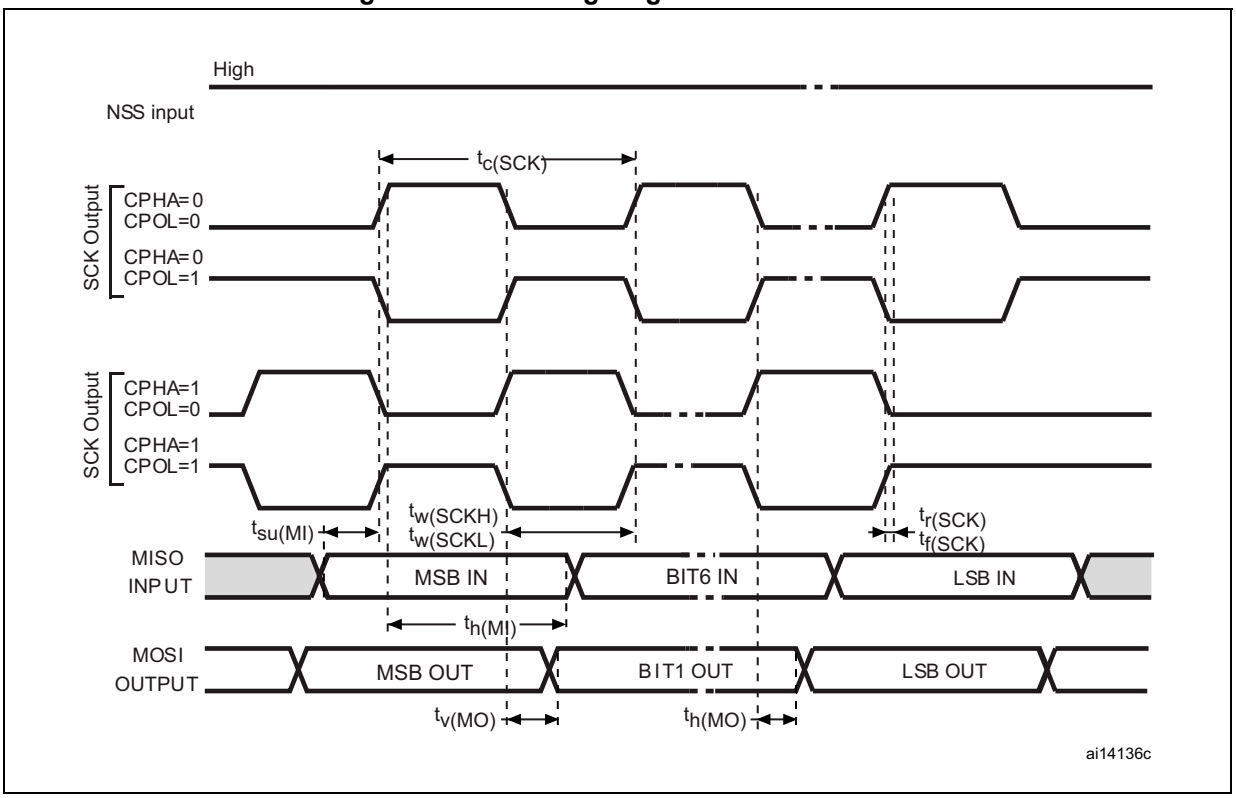

I²S interface characteristics

Unless otherwise specified, the parameters given in *Table 63* for the I²S interface are derived from tests performed under the ambient temperature, f_{PCLKx} frequency and V_{DD} supply voltage conditions summarized in *Table 17*, with the following configuration:

- Output speed is set to OSPEEDRy[1:0] = 10
- Capacitive load C = 30 pF
- Measurement points are done at CMOS levels: $0.5V_{DD}$

Refer to *Section 6.3.17: I/O port characteristics* for more details on the input/output alternate function characteristics (CK, SD, WS).

Table 63. I²S dynamic characteristics(1)

Symbol	Parameter	Conditions	Min	Max	Unit
f_{MCK}	I2S Main clock output	-	256x8K	256xFs(2)	MHz
f_{CK}	I2S clock frequency	Master data: 32 bits	-	64xFs	MHz
		Slave data: 32 bits	-	64xFs	
D_{CK}	I2S clock frequency duty cycle	Slave receiver	30	70	%
$t_{v(WS)}$	WS valid time	Master mode	0	6	ns
$t_{h(WS)}$	WS hold time	Master mode	0	-	
$t_{su(WS)}$	WS setup time	Slave mode	1	-	
$t_{h(WS)}$	WS hold time	Slave mode	0	-	
$t_{su(SD_MR)}$	Data input setup time	Master receiver	7.5	-	
$t_{su(SD_SR)}$		Slave receiver	2	-	
$t_{h(SD_MR)}$	Data input hold time	Master receiver	0	-	
$t_{h(SD_SR)}$		Slave receiver	0	-	
$t_{v(SD_ST)}$ $t_{h(SD_ST)}$	Data output valid time	Slave transmitter (after enable edge)	-	27	
$t_{v(SD_MT)}$		Master transmitter (after enable edge)	-	20	
$t_{h(SD_MT)}$	Data output hold time	Master transmitter (after enable edge)	2.5	-	

1. Guaranteed by characterization results.
2. The maximum value of 256xFs is 45 MHz (APB1 maximum frequency).

Note: Refer to the I2S section of RM0090 reference manual for more details on the sampling frequency (F_S).

*f_{MCK}, f_{CK}, and D_{CK} values reflect only the digital peripheral behavior. The values of these parameters might be slightly impacted by the source clock precision. D_{CK} depends mainly on the value of ODD bit. The digital contribution leads to a minimum value of (I2SDIV/(2*I2SDIV+ODD) and a maximum value of (I2SDIV+ODD)/(2*I2SDIV+ODD). F_S maximum value is supported for each mode/condition.*

Figure 41. I²S slave timing diagram (Philips protocol)(1)

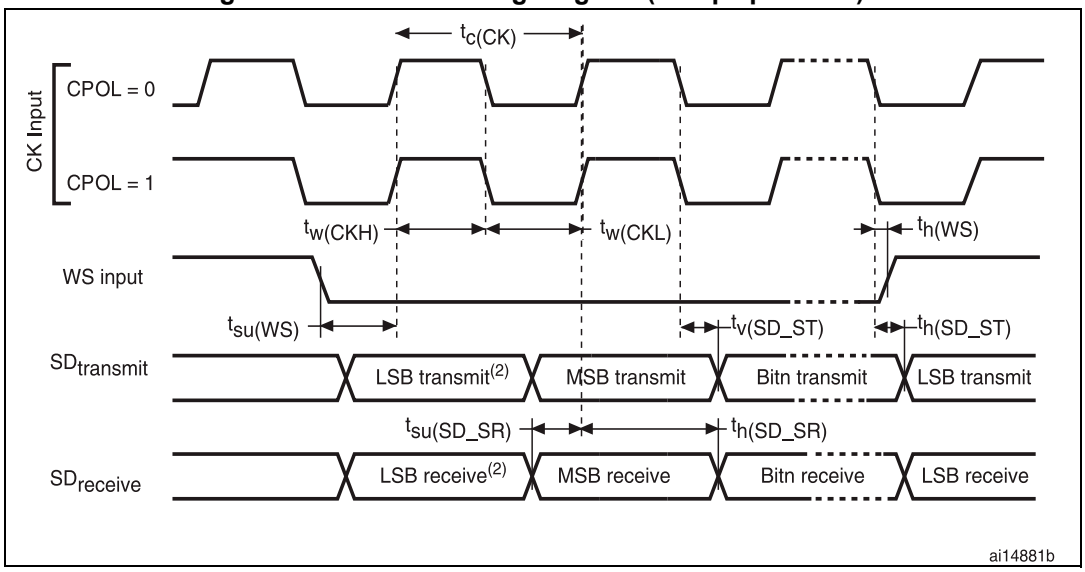

1. .LSB transmit/receive of the previously transmitted byte. No LSB transmit/receive is sent before the first byte.

Figure 42. I²S master timing diagram (Philips protocol)(1)

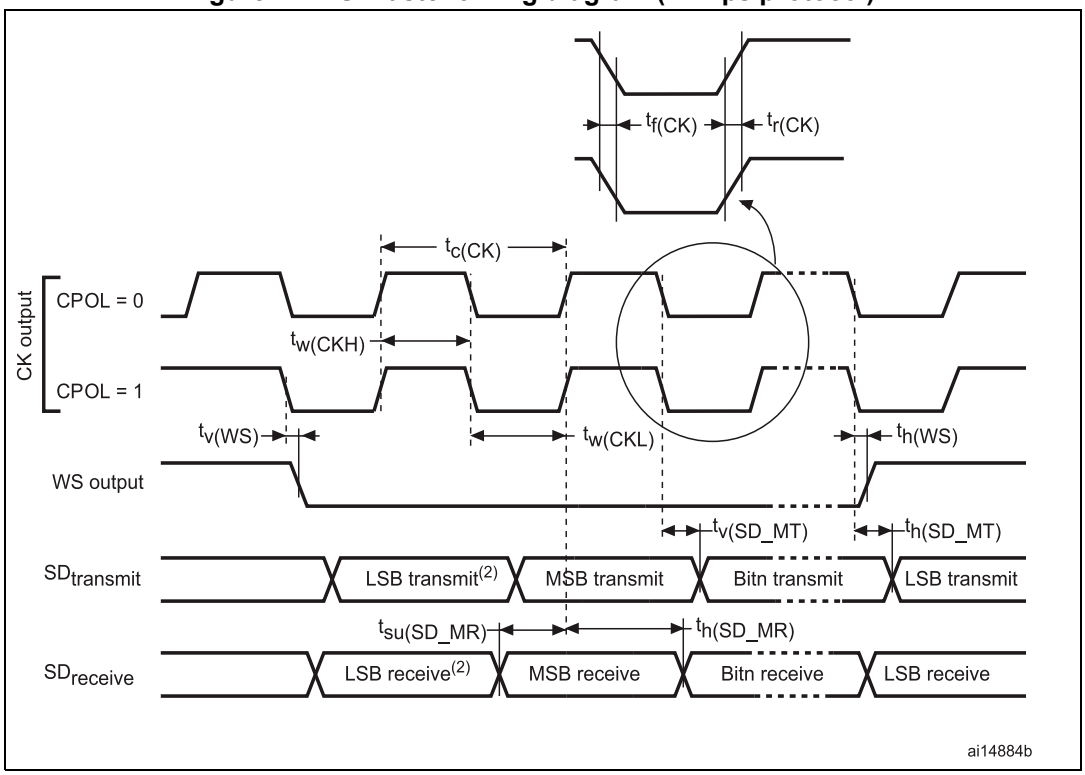

1. LSB transmit/receive of the previously transmitted byte. No LSB transmit/receive is sent before the first byte.

SAI characteristics

Unless otherwise specified, the parameters given in *Table 64* for SAI are derived from tests performed under the ambient temperature, f_{PCLKx} frequency and VDD supply voltage conditions summarized in *Table 17*, with the following configuration:

- Output speed is set to OSPEEDRy[1:0] = 10
- Capacitive load C=30 pF
- Measurement points are performed at CMOS levels: $0.5V_{DD}$

Refer to *Section 6.3.17: I/O port characteristics* for more details on the input/output alternate function characteristics (SCK,SD,WS).

Table 64. SAI characteristics(1)

Symbol	Parameter	Conditions	Min	Max	Unit
f_{MCKL}	SAI Main clock output	-	256 x 8K	256xFs(2)	MHz
F_{SCK}	SAI clock frequency	Master data: 32 bits	-	64xFs	MHz
		Slave data: 32 bits	-	64xFs	
D_{SCK}	SAI clock frequency duty cycle	Slave receiver	30	70	%
$t_{v(FS)}$	FS valid time	Master mode	8	22	ns
$t_{su(FS)}$	FS setup time	Slave mode	2	-	
$t_{h(FS)}$	FS hold time	Master mode	8	-	
		Slave mode	0	-	
$t_{su(SD_MR)}$	Data input setup time	Master receiver	5	-	
$t_{su(SD_SR)}$		Slave receiver	3	-	
$t_{h(SD_MR)}$	Data input hold time	Master receiver	0	-	
$t_{h(SD_SR)}$		Slave receiver	0	-	
$t_{v(SD_ST)}$ $t_{h(SD_ST)}$	Data output valid time	Slave transmitter (after enable edge)	-	22	
$t_{v(SD_MT)}$		Master transmitter (after enable edge)	-	20	
$t_{h(SD_MT)}$	Data output hold time	Master transmitter (after enable edge)	8	-	

1. Guaranteed by characterization results.
2. 256xFs maximum corresponds to 45 MHz (APB2 xaximum frequency)

Figure 43. SAI master timing waveforms

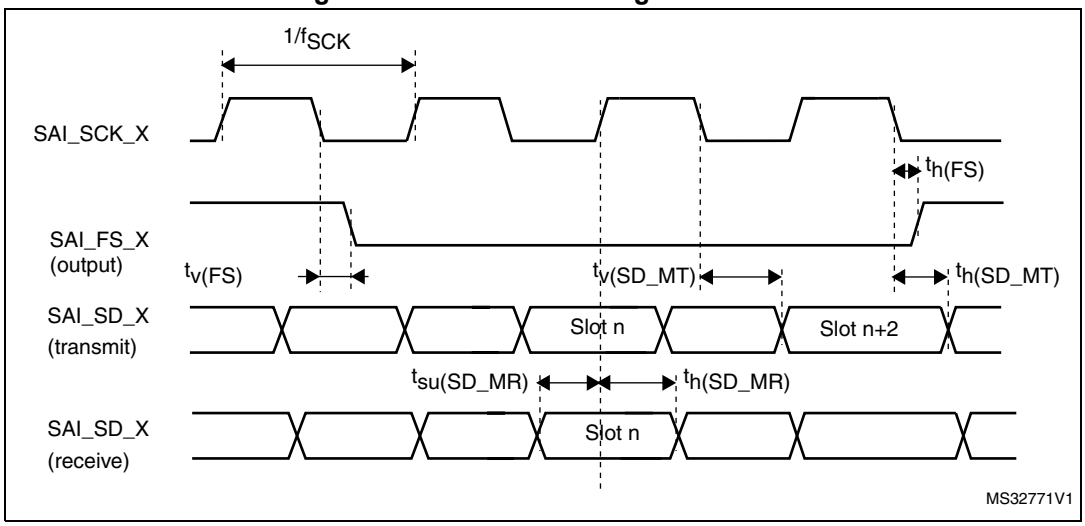

Figure 44. SAI slave timing waveforms

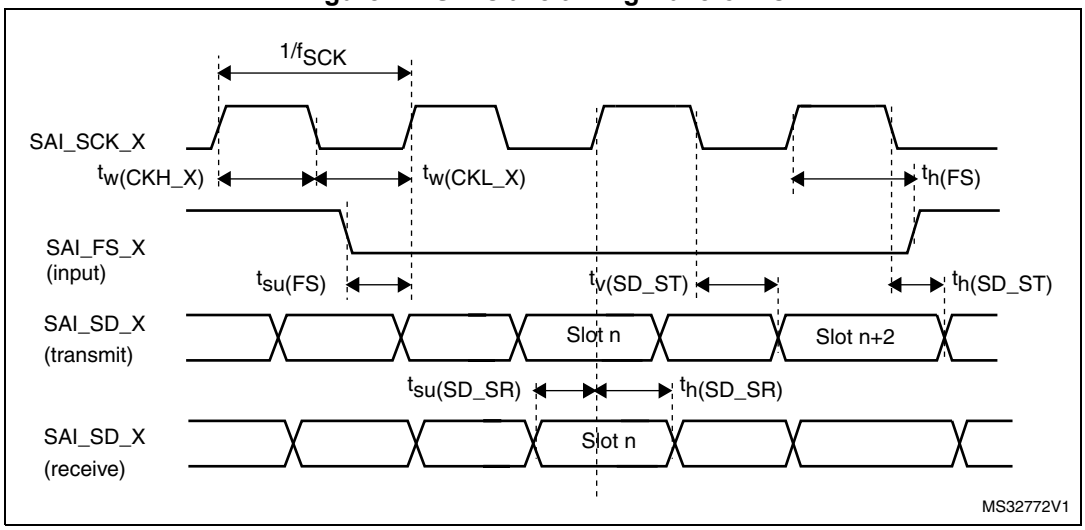

USB OTG full speed (FS) characteristics

This interface is present in both the USB OTG HS and USB OTG FS controllers.

Table 65. USB OTG full speed startup time

Symbol	Parameter	Max	Unit
$t_{STARTUP}$(1)	USB OTG full speed transceiver startup time	1	µs

1. Guaranteed by design.

Table 66. USB OTG full speed DC electrical characteristics

Symbol		Parameter	Conditions	Min.(1)	Typ.	Max.(1)	Unit
Input levels	V_{DD}	USB OTG full speed transceiver operating voltage		3.0(2)	-	3.6	V
	V_{DI}(3)	Differential input sensitivity	I(USB_FS_DP/DM, USB_HS_DP/DM)	0.2	-	-	V
	V_{CM}(3)	Differential common mode range	Includes V_{DI} range	0.8	-	2.5	
	V_{SE}(3)	Single ended receiver threshold		1.3	-	2.0	
Output levels	V_{OL}	Static output level low	R_L of 1.5 kΩ to 3.6 V(4)	-	-	0.3	V
	V_{OH}	Static output level high	R_L of 15 kΩ to V_{SS}(4)	2.8	-	3.6	
R_{PD}		PA11, PA12, PB14, PB15 (USB_FS_DP/DM, USB_HS_DP/DM)	$V_{IN} = V_{DD}$	17	21	24	kΩ
		PA9, PB13 (OTG_FS_VBUS, OTG_HS_VBUS)		0.65	1.1	2.0	
R_{PU}		PA12, PB15 (USB_FS_DP, USB_HS_DP)	$V_{IN} = V_{SS}$	1.5	1.8	2.1	
		PA9, PB13 (OTG_FS_VBUS, OTG_HS_VBUS)	$V_{IN} = V_{SS}$	0.25	0.37	0.55	

1. All the voltages are measured from the local ground potential.
2. The USB OTG full speed transceiver functionality is ensured down to 2.7 V but not the full USB full speed electrical characteristics which are degraded in the 2.7-to-3.0 V V_{DD} voltage range.
3. Guaranteed by design.
4. R_L is the load connected on the USB OTG full speed drivers.

Note: When VBUS sensing feature is enabled, PA9 and PB13 should be left at their default state (floating input), not as alternate function. A typical 200 µA current consumption of the sensing block (current to voltage conversion to determine the different sessions) can be observed on PA9 and PB13 when the feature is enabled.

Figure 45. USB OTG full speed timings: definition of data signal rise and fall time

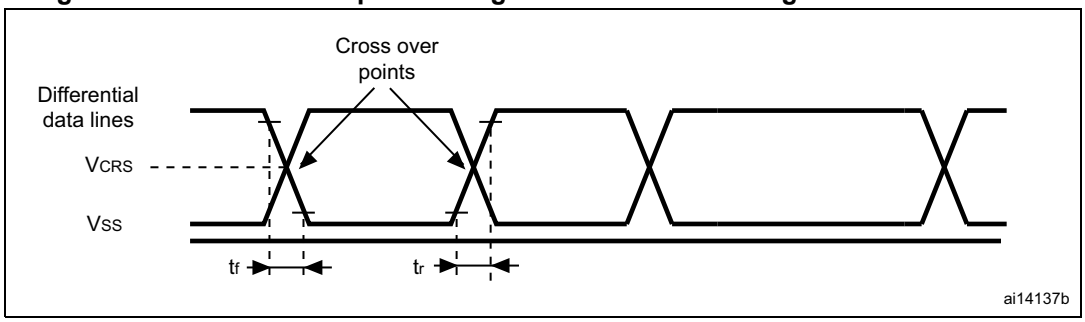

Table 67. USB OTG full speed electrical characteristics(1)

Driver characteristics					
Symbol	**Parameter**	**Conditions**	**Min**	**Max**	**Unit**
t_r	Rise time(2)	C_L = 50 pF	4	20	ns
t_f	Fall time(2)	C_L = 50 pF	4	20	ns
t_{rfm}	Rise/ fall time matching	t_r/t_f	90	110	%
V_{CRS}	Output signal crossover voltage		1.3	2.0	V
Z_{DRV}	Output driver impedance(3)	Driving high or low	28	44	Ω

1. Guaranteed by design.
2. Measured from 10% to 90% of the data signal. For more detailed informations, please refer to USB Specification - Chapter 7 (version 2.0).
3. No external termination series resistors are required on DP (D+) and DM (D-) pins since the matching impedance is included in the embedded driver.

USB high speed (HS) characteristics

Unless otherwise specified, the parameters given in *Table 70* for ULPI are derived from tests performed under the ambient temperature, f_{HCLK} frequency summarized in *Table 69* and V_{DD} supply voltage conditions summarized in *Table 68*, with the following configuration:

- Output speed is set to OSPEEDRy[1:0] = 10, unless otherwise specified
- Capacitive load C = 30 pF, unless otherwise specified
- Measurement points are done at CMOS levels: $0.5V_{DD}$.

Refer to *Section 6.3.17: I/O port characteristics* for more details on the input/output characteristics.

Table 68. USB HS DC electrical characteristics

Symbol		Parameter	Min.(1)	Max.(1)	Unit
Input level	V_{DD}	USB OTG HS operating voltage	1.7	3.6	V

1. All the voltages are measured from the local ground potential.

Table 69. USB HS clock timing parameters(1)

Symbol	Parameter		Min	Typ	Max	Unit
	f_{HCLK} value to guarantee proper operation of USB HS interface		30	-	-	MHz
F_{START_8BIT}	Frequency (first transition)	8-bit ±10%	54	60	66	MHz
F_{STEADY}	Frequency (steady state) ±500 ppm		59.97	60	60.03	MHz
D_{START_8BIT}	Duty cycle (first transition)	8-bit ±10%	40	50	60	%
D_{STEADY}	Duty cycle (steady state) ±500 ppm		49.975	50	50.025	%
t_{STEADY}	Time to reach the steady state frequency and duty cycle after the first transition		-	-	1.4	ms
t_{START_DEV}	Clock startup time after the de-assertion of SuspendM	Peripheral	-	-	5.6	ms
t_{START_HOST}		Host	-	-	-	
t_{PREP}	PHY preparation time after the first transition of the input clock		-	-	-	µs

1. Guaranteed by design.

Figure 46. ULPI timing diagram

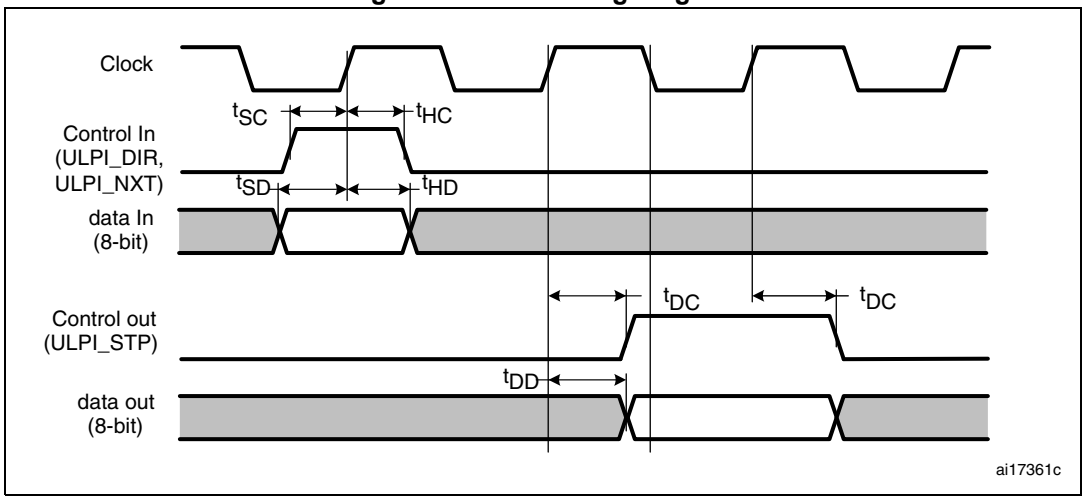

Table 70. Dynamic characteristics: USB ULPI(1)

Symbol	Parameter	Conditions	Min.	Typ.	Max.	Unit
t_{SC}	Control in (ULPI_DIR, ULPI_NXT) setup time		2	-	-	ns
t_{HC}	Control in (ULPI_DIR, ULPI_NXT) hold time		0.5	-	-	
t_{SD}	Data in setup time		1.5	-	-	
t_{HD}	Data in hold time		2	-	-	
t_{DC}/t_{DD}	Data/control output delay	2.7 V < V_{DD} < 3.6 V, C_L = 15 pF and OSPEEDRy[1:0] = 11	-	9	9.5	
		2.7 V < V_{DD} < 3.6 V, C_L = 20 pF and OSPEEDRy[1:0] = 10	-	12	15	
		1.7 V < V_{DD} < 3.6 V, C_L = 15 pF and OSPEEDRy[1:0] = 11	-			

1. Guaranteed by characterization results.

Ethernet characteristics

Unless otherwise specified, the parameters given in *Table 71*, *Table 72* and *Table 73* for SMI, RMII and MII are derived from tests performed under the ambient temperature, f_{HCLK} frequency summarized in *Table 17* with the following configuration:

- Output speed is set to OSPEEDRy[1:0] = 10
- Capacitive load C = 30 pF for 2.7 V < V_{DD} < 3.6 V
- Capacitive load C = 20 pF for 1.71 V < V_{DD} < 3.6 V
- Measurement points are done at CMOS levels: $0.5V_{DD}$.

Refer to *Section 6.3.17: I/O port characteristics* for more details on the input/output characteristics.

Table 71 gives the list of Ethernet MAC signals for the SMI (station management interface) and *Figure 47* shows the corresponding timing diagram.

Figure 47. Ethernet SMI timing diagram

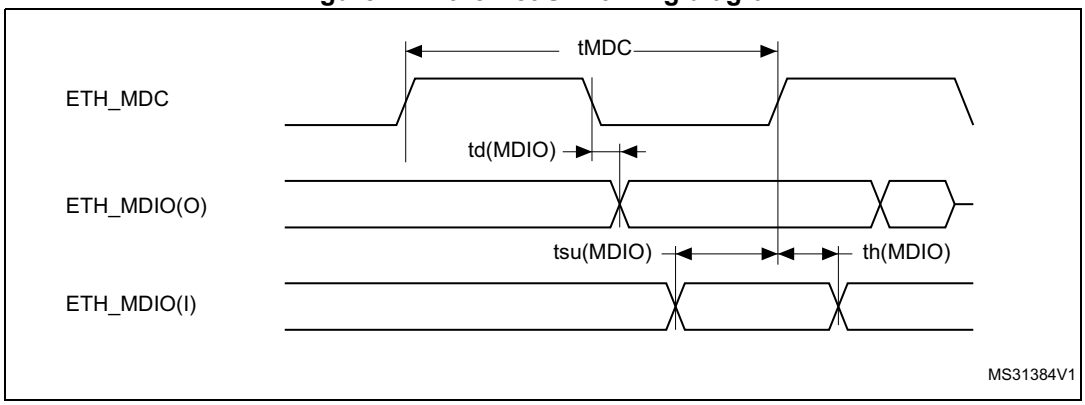

Table 71. Dynamics characteristics: Ethernet MAC signals for SMI(1)

Symbol	Parameter	Min	Typ	Max	Unit
t_{MDC}	MDC cycle time(2.38 MHz)	411	420	425	ns
$T_{d(MDIO)}$	Write data valid time	6	10	13	
$t_{su(MDIO)}$	Read data setup time	12	-	-	
$t_{h(MDIO)}$	Read data hold time	0	-	-	

1. Guaranteed by characterization results.

Table 72 gives the list of Ethernet MAC signals for the RMII and *Figure 48* shows the corresponding timing diagram.

Figure 48. Ethernet RMII timing diagram

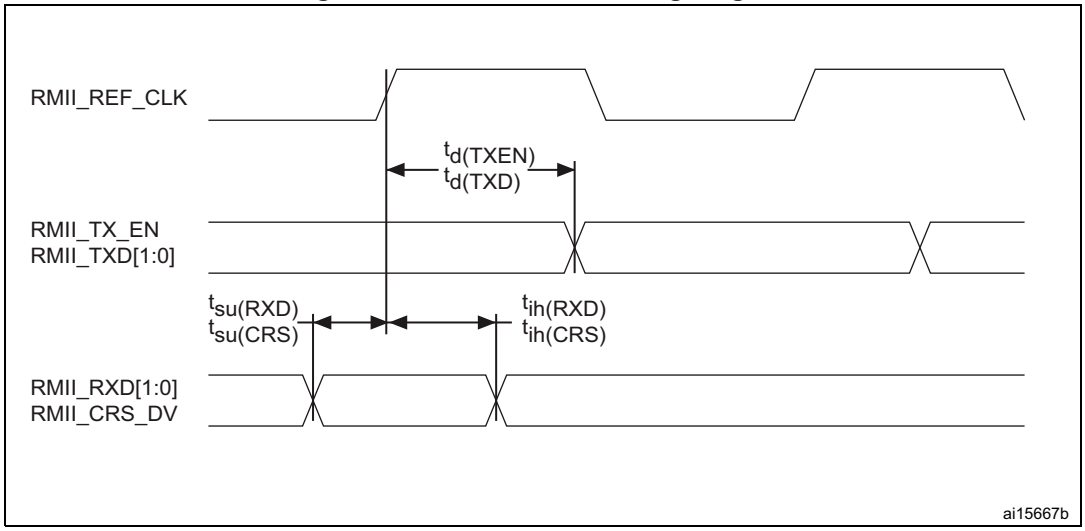

Table 72. Dynamics characteristics: Ethernet MAC signals for RMII(1)

Symbol	Parameter	Condition	Min	Typ	Max	Unit
$t_{su(RXD)}$	Receive data setup time	1.71 V < V_{DD} < 3.6 V	1.5	-	-	ns
$t_{ih(RXD)}$	Receive data hold time		0	-	-	
$t_{su(CRS)}$	Carrier sense setup time		1	-	-	
$t_{ih(CRS)}$	Carrier sense hold time		1	-	-	
$t_{d(TXEN)}$	Transmit enable valid delay time	2.7 V < V_{DD} < 3.6 V	8	10.5	12	
		1.71 V < V_{DD} < 3.6 V	8	10.5	14	
$t_{d(TXD)}$	Transmit data valid delay time	2.7 V < V_{DD} < 3.6 V	8	11	12.5	
		1.71 V < V_{DD} < 3.6 V	8	11	14.5	

1. Guaranteed by characterization results.

Table 73 gives the list of Ethernet MAC signals for MII and *Figure 48* shows the corresponding timing diagram.

Figure 49. Ethernet MII timing diagram

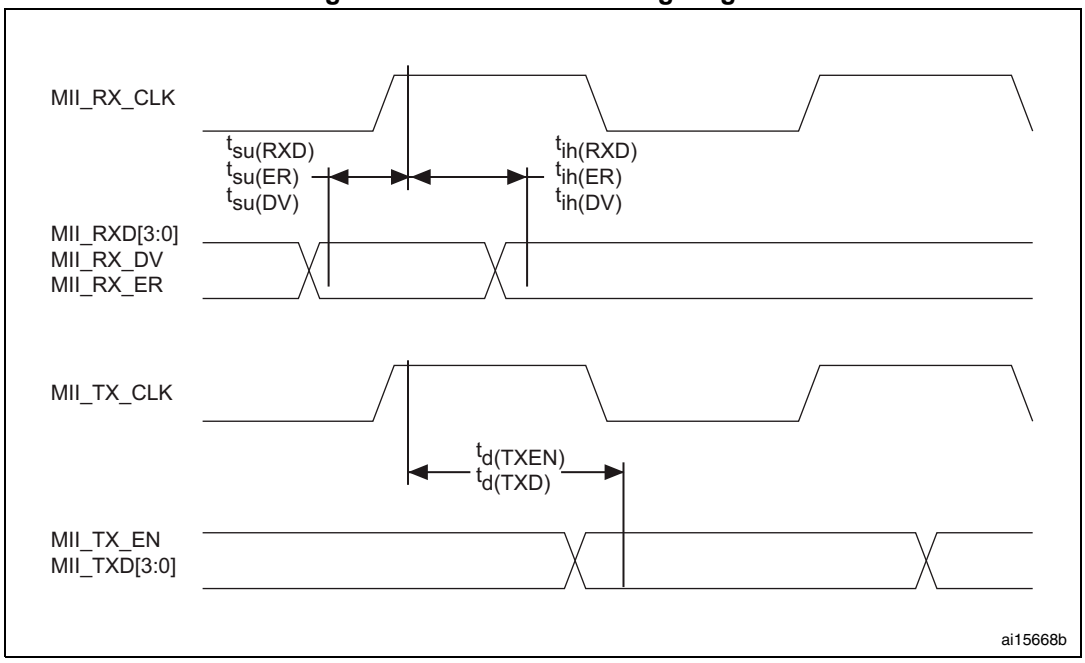

Table 73. Dynamics characteristics: Ethernet MAC signals for MII(1)

Symbol	Parameter	Condition	Min	Typ	Max	Unit
$t_{su(RXD)}$	Receive data setup time	1.71 V < V_{DD} < 3.6 V	9	-	-	ns
$t_{ih(RXD)}$	Receive data hold time		10	-	-	
$t_{su(DV)}$	Data valid setup time		9	-	-	
$t_{ih(DV)}$	Data valid hold time		8	-	-	
$t_{su(ER)}$	Error setup time		6	-	-	
$t_{ih(ER)}$	Error hold time		8	-	-	
$t_{d(TXEN)}$	Transmit enable valid delay time	2.7 V < V_{DD} < 3.6 V	8	10	14	
		1.71 V < V_{DD} < 3.6 V	8	10	16	
$t_{d(TXD)}$	Transmit data valid delay time	2.7 V < V_{DD} < 3.6 V	7.5	10	15	
		1.71 V < V_{DD} < 3.6 V	7.5	10	17	

1. Guaranteed by characterization results.

CAN (controller area network) interface

Refer to *Section 6.3.17: I/O port characteristics* for more details on the input/output alternate function characteristics (CANx_TX and CANx_RX).

6.3.21 12-bit ADC characteristics

Unless otherwise specified, the parameters given in *Table 74* are derived from tests performed under the ambient temperature, f_{PCLK2} frequency and V_{DDA} supply voltage conditions summarized in *Table 17*.

Table 74. ADC characteristics

Symbol	Parameter	Conditions	Min	Typ	Max	Unit
V_{DDA}	Power supply	$V_{DDA} - V_{REF+} < 1.2$ V	1.7(1)	-	3.6	V
V_{REF+}	Positive reference voltage		1.7(1)	-	V_{DDA}	
V_{REF-}	Negative reference voltage	-	-	0	-	
f_{ADC}	ADC clock frequency	V_{DDA} = 1.7(1) to 2.4 V	0.6	15	18	MHz
		V_{DDA} = 2.4 to 3.6 V	0.6	30	36	MHz
f_{TRIG}(2)	External trigger frequency	f_{ADC} = 30 MHz, 12-bit resolution	-	-	1764	kHz
			-	-	17	$1/f_{ADC}$
V_{AIN}	Conversion voltage range(3)		0 (V_{SSA} or V_{REF-} tied to ground)	-	V_{REF+}	V
R_{AIN}(2)	External input impedance	See *Equation 1* for details	-	-	50	kΩ
R_{ADC}(2)(4)	Sampling switch resistance		1.5	-	6	kΩ
C_{ADC}(2)	Internal sample and hold capacitor		-	4	7	pF
t_{lat}(2)	Injection trigger conversion latency	f_{ADC} = 30 MHz	-	-	0.100	µs
			-	-	3(5)	$1/f_{ADC}$
t_{latr}(2)	Regular trigger conversion latency	f_{ADC} = 30 MHz	-	-	0.067	µs
			-	-	2(5)	$1/f_{ADC}$
t_S(2)	Sampling time	f_{ADC} = 30 MHz	0.100	-	16	µs
			3	-	480	$1/f_{ADC}$
t_{STAB}(2)	Power-up time		-	2	3	µs
t_{CONV}(2)	Total conversion time (including sampling time)	f_{ADC} = 30 MHz 12-bit resolution	0.50	-	16.40	µs
		f_{ADC} = 30 MHz 10-bit resolution	0.43	-	16.34	µs
		f_{ADC} = 30 MHz 8-bit resolution	0.37	-	16.27	µs
		f_{ADC} = 30 MHz 6-bit resolution	0.30	-	16.20	µs
		9 to 492 (t_S for sampling +n-bit resolution for successive approximation)				$1/f_{ADC}$

Table 74. ADC characteristics (continued)

Symbol	Parameter	Conditions	Min	Typ	Max	Unit
f_S(2)	Sampling rate (f_{ADC} = 30 MHz, and t_S = 3 ADC cycles)	12-bit resolution Single ADC	-	-	2	Msps
		12-bit resolution Interleave Dual ADC mode	-	-	3.75	Msps
		12-bit resolution Interleave Triple ADC mode	-	-	6	Msps
I_{VREF+}(2)	ADC V_{REF} DC current consumption in conversion mode		-	300	500	µA
I_{VDDA}(2)	ADC V_{DDA} DC current consumption in conversion mode		-	1.6	1.8	mA

1. V_{DDA} minimum value of 1.7 V is obtained with the use of an external power supply supervisor (refer to *Section 3.17.2: Internal reset OFF*).
2. Guaranteed by characterization results.
3. V_{REF+} is internally connected to V_{DDA} and V_{REF-} is internally connected to V_{SSA}.
4. R_{ADC} maximum value is given for V_{DD}=1.7 V, and minimum value for V_{DD}=3.3 V.
5. For external triggers, a delay of $1/f_{PCLK2}$ must be added to the latency specified in *Table 74*.

Equation 1: R_{AIN} max formula

$$R_{AIN} = \frac{(k - 0.5)}{f_{ADC} \times C_{ADC} \times \ln(2^{N+2})} - R_{ADC}$$

The formula above (*Equation 1*) is used to determine the maximum external impedance allowed for an error below 1/4 of LSB. N = 12 (from 12-bit resolution) and k is the number of sampling periods defined in the ADC_SMPR1 register.

Table 75. ADC static accuracy at f_{ADC} = 18 MHz

Symbol	Parameter	Test conditions	Typ	Max(1)	Unit
ET	Total unadjusted error	f_{ADC} =18 MHz V_{DDA} = 1.7 to 3.6 V V_{REF} = 1.7 to 3.6 V $V_{DDA} - V_{REF}$ < 1.2 V	±3	±4	LSB
EO	Offset error		±2	±3	
EG	Gain error		±1	±3	
ED	Differential linearity error		±1	±2	
EL	Integral linearity error		±2	±3	

1. Guaranteed by characterization results.

Table 76. ADC static accuracy at f_{ADC} = 30 MHz

Symbol	Parameter	Test conditions	Typ	Max(1)	Unit
ET	Total unadjusted error	f_{ADC} = 30 MHz, R_{AIN} < 10 kΩ, V_{DDA} = 2.4 to 3.6 V, V_{REF} = 1.7 to 3.6 V, $V_{DDA} - V_{REF}$ < 1.2 V	±2	±5	LSB
EO	Offset error		±1.5	±2.5	
EG	Gain error		±1.5	±3	
ED	Differential linearity error		±1	±2	
EL	Integral linearity error		±1.5	±3	

1. Guaranteed by characterization results.

Table 77. ADC static accuracy at f_{ADC} = 36 MHz

Symbol	Parameter	Test conditions	Typ	Max(1)	Unit
ET	Total unadjusted error	f_{ADC} =36 MHz, V_{DDA} = 2.4 to 3.6 V, V_{REF} = 1.7 to 3.6 V $V_{DDA} - V_{REF}$ < 1.2 V	±4	±7	LSB
EO	Offset error		±2	±3	
EG	Gain error		±3	±6	
ED	Differential linearity error		±2	±3	
EL	Integral linearity error		±3	±6	

1. Guaranteed by characterization results.

Table 78. ADC dynamic accuracy at f_{ADC} = 18 MHz - limited test conditions(1)

Symbol	Parameter	Test conditions	Min	Typ	Max	Unit
ENOB	Effective number of bits	f_{ADC} =18 MHz $V_{DDA} = V_{REF+}$= 1.7 V Input Frequency = 20 KHz Temperature = 25 °C	10.3	10.4	-	bits
SINAD	Signal-to-noise and distortion ratio		64	64.2	-	dB
SNR	Signal-to-noise ratio		64	65	-	
THD	Total harmonic distortion		− 67	− 72	-	

1. Guaranteed by characterization results.

Table 79. ADC dynamic accuracy at f_{ADC} = 36 MHz - limited test conditions(1)

Symbol	Parameter	Test conditions	Min	Typ	Max	Unit
ENOB	Effective number of bits	f_{ADC} =36 MHz $V_{DDA} = V_{REF+}$ = 3.3 V Input Frequency = 20 KHz Temperature = 25 °C	10.6	10.8	-	bits
SINAD	Signal-to noise and distortion ratio		66	67	-	dB
SNR	Signal-to noise ratio		64	68	-	
THD	Total harmonic distortion		− 70	− 72	-	

1. Guaranteed by characterization results.

Note: ADC accuracy vs. negative injection current: injecting a negative current on any analog input pins should be avoided as this significantly reduces the accuracy of the conversion being performed on another analog input. It is recommended to add a Schottky diode (pin to ground) to analog pins which may potentially inject negative currents.

Any positive injection current within the limits specified for $I_{INJ(PIN)}$ and $\Sigma I_{INJ(PIN)}$ in *Section 6.3.17* does not affect the ADC accuracy.

Figure 50. ADC accuracy characteristics

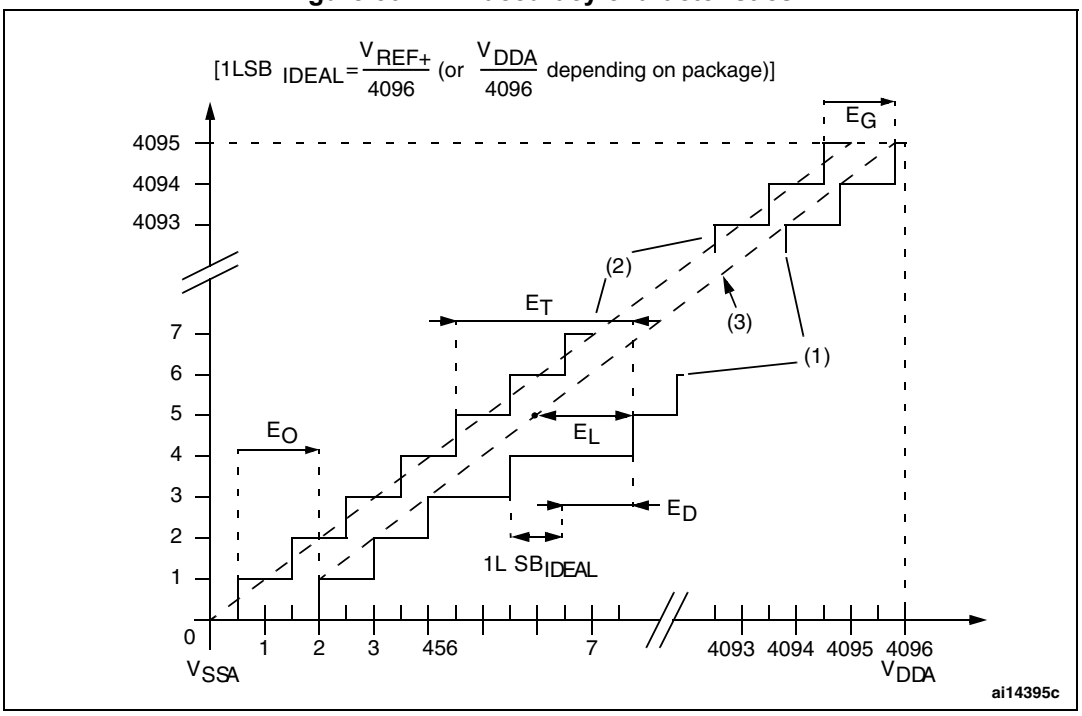

1. See also *Table 76*.
2. Example of an actual transfer curve.
3. Ideal transfer curve.
4. End point correlation line.
5. E_T = Total Unadjusted Error: maximum deviation between the actual and the ideal transfer curves.
   EO = Offset Error: deviation between the first actual transition and the first ideal one.
   EG = Gain Error: deviation between the last ideal transition and the last actual one.
   ED = Differential Linearity Error: maximum deviation between actual steps and the ideal one.
   EL = Integral Linearity Error: maximum deviation between any actual transition and the end point correlation line.

Figure 51. Typical connection diagram using the ADC

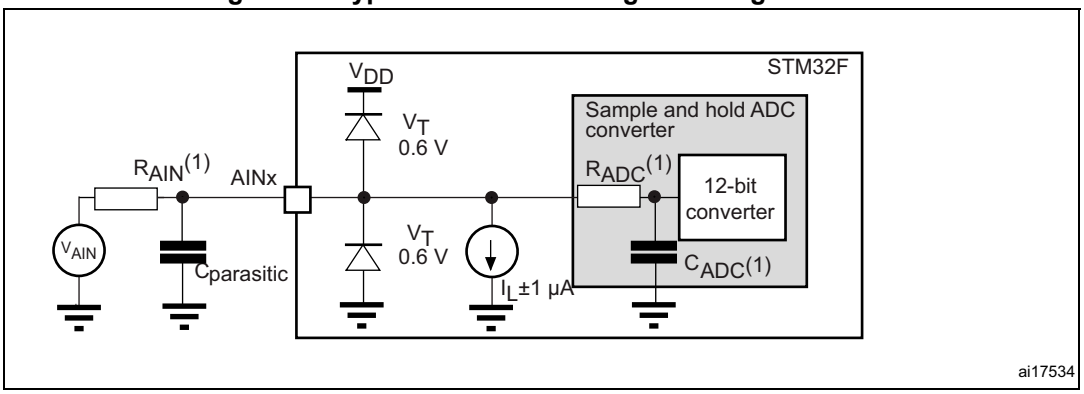

1. Refer to *Table 74* for the values of R_{AIN}, R_{ADC} and C_{ADC}.
2. $C_{parasitic}$ represents the capacitance of the PCB (dependent on soldering and PCB layout quality) plus the pad capacitance (roughly 5 pF). A high $C_{parasitic}$ value downgrades conversion accuracy. To remedy this, f_{ADC} should be reduced.

General PCB design guidelines

Power supply decoupling should be performed as shown in *Figure 52* or *Figure 53*, depending on whether V_{REF+} is connected to V_{DDA} or not. The 10 nF capacitors should be ceramic (good quality). They should be placed them as close as possible to the chip.

Figure 52. Power supply and reference decoupling (V_{REF+} not connected to V_{DDA})

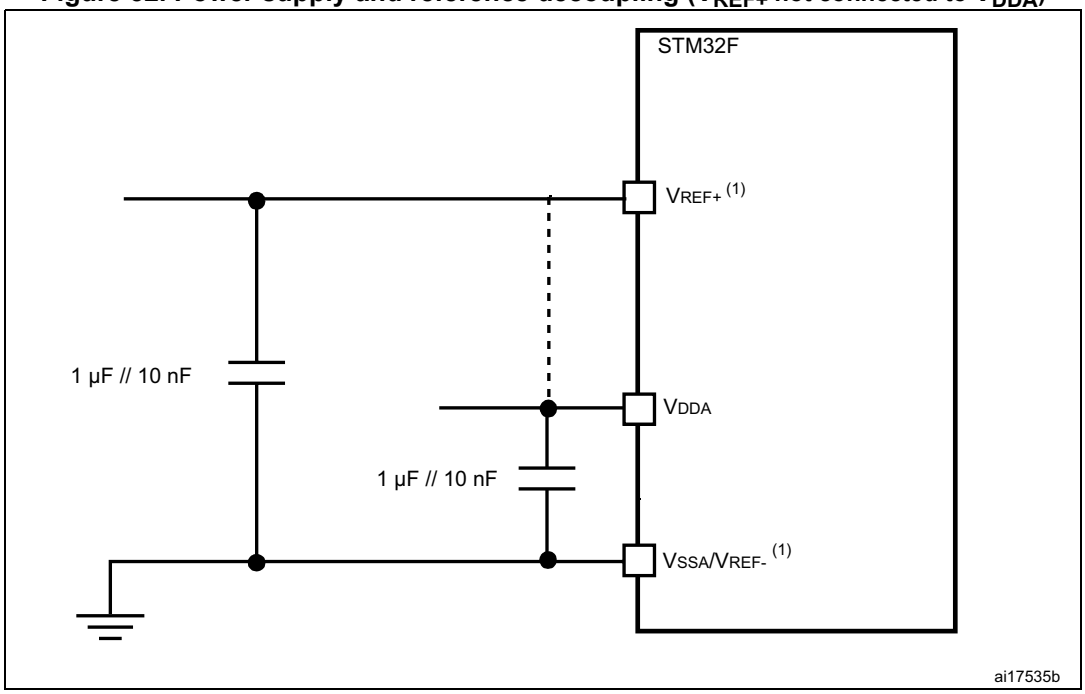

1. V_{REF+} and V_{REF-} inputs are both available on UFBGA176. V_{REF+} is also available on LQFP100, LQFP144, and LQFP176. When V_{REF+} and V_{REF-} are not available, they are internally connected to V_{DDA} and V_{SSA}.

Figure 53. Power supply and reference decoupling (V_{REF+} connected to V_{DDA})

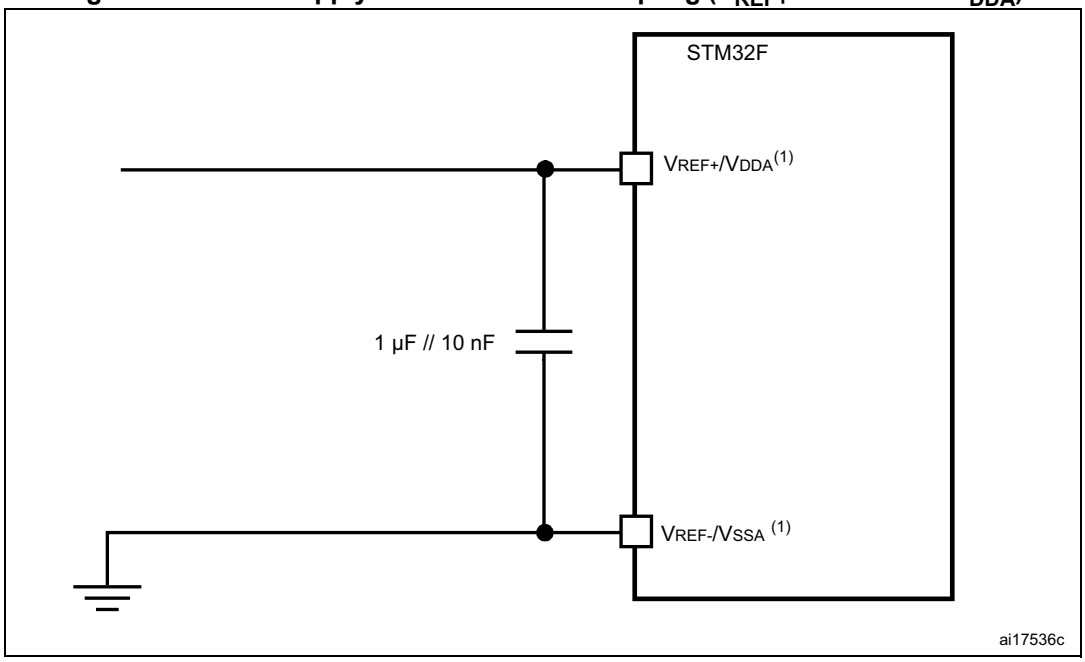

1. V_{REF+} and V_{REF-} inputs are both available on UFBGA176. V_{REF+} is also available on LQFP100, LQFP144, and LQFP176. When V_{REF+} and V_{REF-} are not available, they are internally connected to V_{DDA} and V_{SSA}.

6.3.22 Temperature sensor characteristics

Table 80. Temperature sensor characteristics

Symbol	Parameter	Min	Typ	Max	Unit
T_L(1)	V_{SENSE} linearity with temperature	-	±1	±2	°C
Avg_Slope(1)	Average slope	-	2.5		mV/°C
V_{25}(1)	Voltage at 25 °C	-	0.76		V
t_{START}(2)	Startup time	-	6	10	µs
T_{S_temp}(2)	ADC sampling time when reading the temperature (1 °C accuracy)	10	-	-	µs

1. Guaranteed by characterization results.
2. Guaranteed by design.

Table 81. Temperature sensor calibration values

Symbol	Parameter	Memory address
TS_CAL1	TS ADC raw data acquired at temperature of 30 °C, V_{DDA}= 3.3 V	0x1FFF 7A2C - 0x1FFF 7A2D
TS_CAL2	TS ADC raw data acquired at temperature of 110 °C, V_{DDA}= 3.3 V	0x1FFF 7A2E - 0x1FFF 7A2F

6.3.23 V_{BAT} monitoring characteristics

Table 82. V_{BAT} monitoring characteristics

Symbol	Parameter	Min	Typ	Max	Unit
R	Resistor bridge for V_{BAT}	-	50	-	KΩ
Q	Ratio on V_{BAT} measurement	-	4	-	
Er(1)	Error on Q	–1	-	+1	%
T_{S_vbat}(2)(2)	ADC sampling time when reading the V_{BAT} 1 mV accuracy	5	-	-	µs

1. Guaranteed by design.
2. Shortest sampling time can be determined in the application by multiple iterations.

6.3.24 Reference voltage

The parameters given in *Table 83* are derived from tests performed under ambient temperature and V_{DD} supply voltage conditions summarized in *Table 17*.

Table 83. internal reference voltage

Symbol	Parameter	Conditions	Min	Typ	Max	Unit
V_{REFINT}	Internal reference voltage	–40 °C < T_A < +105 °C	1.18	1.21	1.24	V
$T_{S_vrefint}$(1)	ADC sampling time when reading the internal reference voltage		10	-	-	µs
V_{RERINT_s}(2)	Internal reference voltage spread over the temperature range	V_{DD} = 3V ± 10mV	-	3	5	mV
T_{Coeff}(2)	Temperature coefficient		-	30	50	ppm/°C
t_{START}(2)	Startup time		-	6	10	µs

1. Shortest sampling time can be determined in the application by multiple iterations.
2. Guaranteed by design, not tested in production

Table 84. Internal reference voltage calibration values

Symbol	Parameter	Memory address
V_{REFIN_CAL}	Raw data acquired at temperature of 30 °C $_{VDDA}$ = 3.3 V	0x1FFF 7A2A - 0x1FFF 7A2B

6.3.25 DAC electrical characteristics

Table 85. DAC characteristics

Symbol	Parameter	Conditions		Min	Typ	Max	Unit	Comments
V_{DDA}	Analog supply voltage	-		1.7(1)	-	3.6	V	-
V_{REF+}	Reference supply voltage	-		1.7(1)	-	3.6	V	$V_{REF+} \leq V_{DDA}$
V_{SSA}	Ground	-		0	-	0	V	-
R_{LOAD}(2)	Resistive load	DAC output buffer ON	R_{LOAD} connected to V_{SSA}	5	-	-	kΩ	-
			R_{LOAD} connected to V_{DDA}	25				-
R_O(2)	Impedance output with buffer OFF	-		-	-	15	kΩ	When the buffer is OFF, the Minimum resistive load between DAC_OUT and V_{SS} to have a 1% accuracy is 1.5 MΩ
C_{LOAD}(2)	Capacitive load	-		-	-	50	pF	Maximum capacitive load at DAC_OUT pin (when the buffer is ON).
DAC_OUT min(2)	Lower DAC_OUT voltage with buffer ON	-		0.2	-	-	V	It gives the maximum output excursion of the DAC. It corresponds to 12-bit input code (0x0E0) to (0xF1C) at V_{REF+} = 3.6 V and (0x1C7) to (0xE38) at V_{REF+} = 1.7 V
DAC_OUT max(2)	Higher DAC_OUT voltage with buffer ON	-		-	-	V_{DDA} − 0.2	V	
DAC_OUT min(2)	Lower DAC_OUT voltage with buffer OFF	-		-	0.5	-	mV	It gives the maximum output excursion of the DAC.
DAC_OUT max(2)	Higher DAC_OUT voltage with buffer OFF	-		-	-	V_{REF+} − 1LSB	V	
I_{VREF+}(4)	DAC DC V_{REF} current consumption in quiescent mode (Standby mode)	-		-	170	240	µA	With no load, worst code (0x800) at V_{REF+} = 3.6 V in terms of DC consumption on the inputs
		-		-	50	75		With no load, worst code (0xF1C) at V_{REF+} = 3.6 V in terms of DC consumption on the inputs

Table 85. DAC characteristics (continued)

Symbol	Parameter	Conditions	Min	Typ	Max	Unit	Comments
I_{DDA}(4)	DAC DC VDDA current consumption in quiescent mode(3)	-	-	280	380	µA	With no load, middle code (0x800) on the inputs
		-	-	475	625	µA	With no load, worst code (0xF1C) at V_{REF+} = 3.6 V in terms of DC consumption on the inputs
DNL(4)	Differential non linearity Difference between two consecutive code-1LSB)	-	-	-	±0.5	LSB	Given for the DAC in 10-bit configuration.
		-	-	-	±2	LSB	Given for the DAC in 12-bit configuration.
INL(4)	Integral non linearity (difference between measured value at Code i and the value at Code i on a line drawn between Code 0 and last Code 1023)	-	-	-	±1	LSB	Given for the DAC in 10-bit configuration.
		-	-	-	±4	LSB	Given for the DAC in 12-bit configuration.
Offset(4)	Offset error (difference between measured value at Code (0x800) and the ideal value = $V_{REF+}/2$)	-	-	-	±10	mV	Given for the DAC in 12-bit configuration
		-	-	-	±3	LSB	Given for the DAC in 10-bit at V_{REF+} = 3.6 V
		-	-	-	±12	LSB	Given for the DAC in 12-bit at V_{REF+} = 3.6 V
Gain error(4)	Gain error	-	-	-	±0.5	%	Given for the DAC in 12-bit configuration
$t_{SETTLING}$(4)	Settling time (full scale: for a 10-bit input code transition between the lowest and the highest input codes when DAC_OUT reaches final value ±4LSB	-	-	3	6	µs	$C_{LOAD} \leq 50$ pF, $R_{LOAD} \geq 5$ kΩ
THD(4)	Total Harmonic Distortion Buffer ON	-	-	-	-	dB	$C_{LOAD} \leq 50$ pF, $R_{LOAD} \geq 5$ kΩ
Update rate(2)	Max frequency for a correct DAC_OUT change when small variation in the input code (from code i to i+1LSB)	-	-	-	1	MS/s	$C_{LOAD} \leq 50$ pF, $R_{LOAD} \geq 5$ kΩ

Table 85. DAC characteristics (continued)

Symbol	Parameter	Conditions	Min	Typ	Max	Unit	Comments
t_{WAKEUP}(4)	Wakeup time from off state (Setting the ENx bit in the DAC Control register)	-	-	6.5	10	µs	$C_{LOAD} \leq 50$ pF, $R_{LOAD} \geq 5$ kΩ input code between lowest and highest possible ones.
PSRR+ (2)	Power supply rejection ratio (to V_{DDA}) (static DC measurement)	-	-	–67	–40	dB	No R_{LOAD}, C_{LOAD} = 50 pF

1. V_{DDA} minimum value of 1.7 V is obtained with the use of an external power supply supervisor (refer to *Section 3.17.2: Internal reset OFF*).
2. Guaranteed by design.
3. The quiescent mode corresponds to a state where the DAC maintains a stable output level to ensure that no dynamic consumption occurs.
4. Guaranteed by characterization.

Figure 54. 12-bit buffered /non-buffered DAC

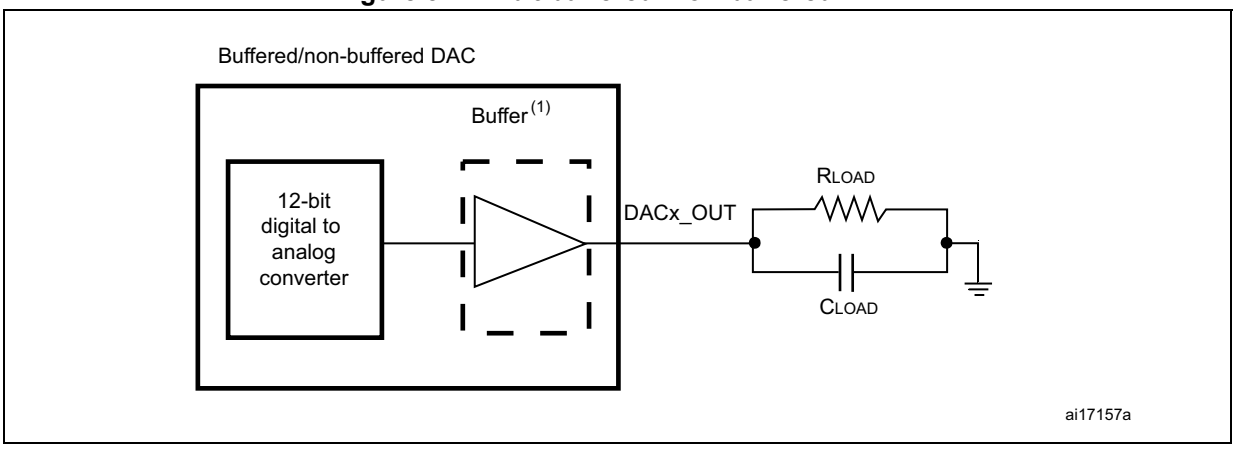

1. The DAC integrates an output buffer that can be used to reduce the output impedance and to drive external loads directly without the use of an external operational amplifier. The buffer can be bypassed by configuring the BOFFx bit in the DAC_CR register.

6.3.26 FMC characteristics

Unless otherwise specified, the parameters given in *Table 86* to *Table 101* for the FMC interface are derived from tests performed under the ambient temperature, f_{HCLK} frequency and V_{DD} supply voltage conditions summarized in *Table 17*, with the following configuration:

- Output speed is set to OSPEEDRy[1:0] = 10 except at V_{DD} range 1.7 to 2.1V where OSPEEDRy[1:0] = 11
- Measurement points are done at CMOS levels: $0.5V_{DD}$

Refer to *Section 6.3.17: I/O port characteristics* for more details on the input/output characteristics.

Asynchronous waveforms and timings

Figure 55 through *Figure 58* represent asynchronous waveforms and *Table 86* through *Table 93* provide the corresponding timings. The results shown in these tables are obtained with the following FMC configuration:

- AddressSetupTime = 0x1
- AddressHoldTime = 0x1
- DataSetupTime = 0x1 (except for asynchronous NWAIT mode , DataSetupTime = 0x5)
- BusTurnAroundDuration = 0x0
- For SDRAM memories, V_{DD} ranges from 2.7 to 3.6 V and maximum frequency FMC_SDCLK = 90 MHz
- For Mobile LPSDR SDRAM memories, V_{DD} ranges from 1.7 to 1.95 V and maximum frequency FMC_SDCLK = 84 MHz

Figure 55. Asynchronous non-multiplexed SRAM/PSRAM/NOR read waveforms

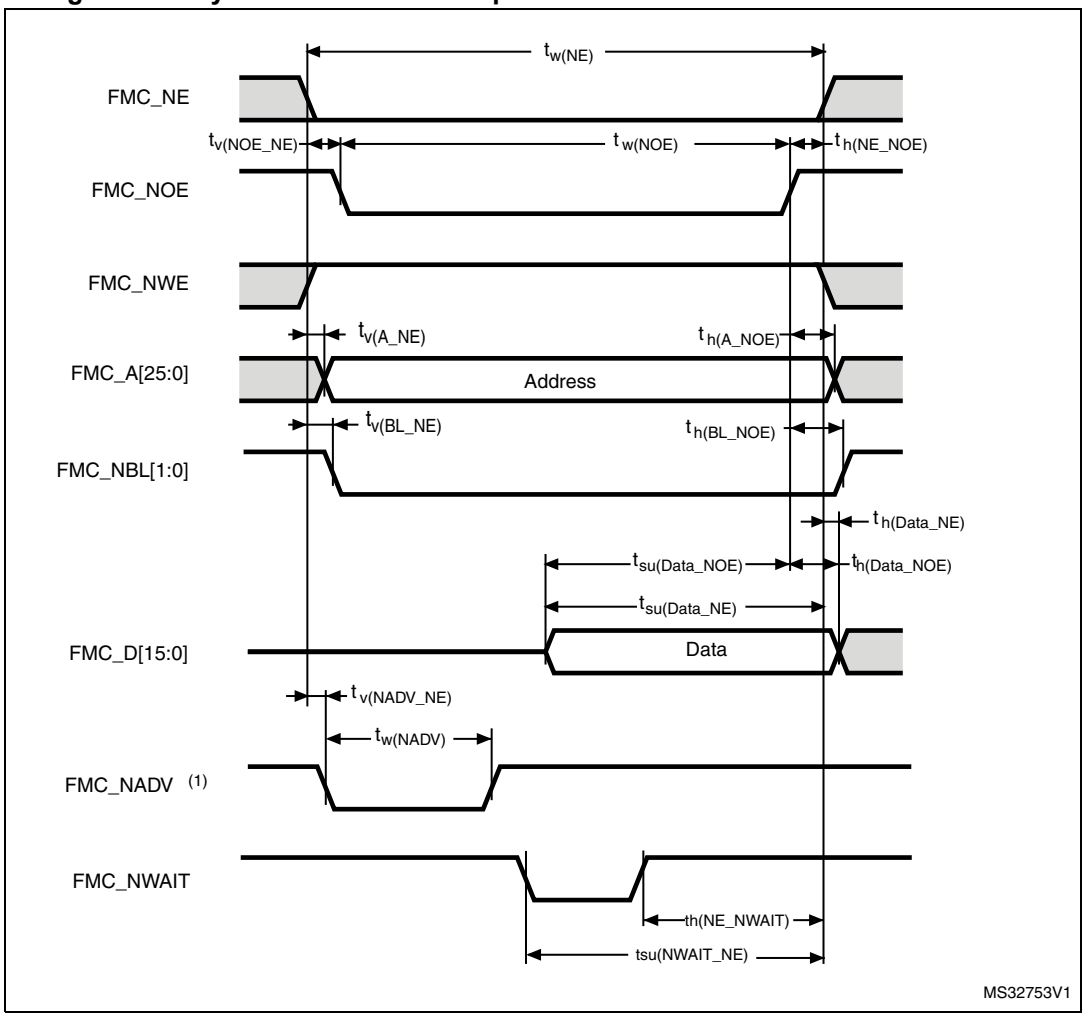

1. Mode 2/B, C and D only. In Mode 1, FMC_NADV is not used.

Table 86. Asynchronous non-multiplexed SRAM/PSRAM/NOR - read timings(1)(2)

Symbol	Parameter	Min	Max	Unit
$t_{w(NE)}$	FMC_NE low time	$2T_{HCLK} - 0.5$	$2\ T_{HCLK}+0.5$	ns
$t_{v(NOE_NE)}$	FMC_NEx low to FMC_NOE low	0	1	ns
$t_{w(NOE)}$	FMC_NOE low time	$2T_{HCLK}$	$2T_{HCLK}+ 0.5$	ns
$t_{h(NE_NOE)}$	FMC_NOE high to FMC_NE high hold time	0	-	ns
$t_{v(A_NE)}$	FMC_NEx low to FMC_A valid	-	2	ns
$t_{h(A_NOE)}$	Address hold time after FMC_NOE high	0	-	ns
$t_{v(BL_NE)}$	FMC_NEx low to FMC_BL valid	-	2	ns
$t_{h(BL_NOE)}$	FMC_BL hold time after FMC_NOE high	0	-	ns
$t_{su(Data_NE)}$	Data to FMC_NEx high setup time	$T_{HCLK} + 2.5$	-	ns
$t_{su(Data_NOE)}$	Data to FMC_NOEx high setup time	$T_{HCLK} +2$	-	ns

Table 86. Asynchronous non-multiplexed SRAM/PSRAM/NOR - read timings(1)(2) (continued)

Symbol	Parameter	Min	Max	Unit
$t_{h(Data_NOE)}$	Data hold time after FMC_NOE high	0	-	ns
$t_{h(Data_NE)}$	Data hold time after FMC_NEx high	0	-	ns
$t_{v(NADV_NE)}$	FMC_NEx low to FMC_NADV low	-	0	ns
$t_{w(NADV)}$	FMC_NADV low time	-	T_{HCLK} +1	ns

1. C_L = 30 pF.
2. Guaranteed by characterization results.

Table 87. Asynchronous non-multiplexed SRAM/PSRAM/NOR read - NWAIT timings(1)(2)

Symbol	Parameter	Min	Max	Unit
$t_{w(NE)}$	FMC_NE low time	$7T_{HCLK}$+0.5	$7T_{HCLK}$+1	ns
$t_{w(NOE)}$	FMC_NWE low time	$5T_{HCLK}$ − 1.5	$5T_{HCLK}$ +2	
$t_{su(NWAIT_NE)}$	FMC_NWAIT valid before FMC_NEx high	$5T_{HCLK}$+1.5	-	
$t_{h(NE_NWAIT)}$	FMC_NEx hold time after FMC_NWAIT invalid	$4T_{HCLK}$+1	-	

1. C_L = 30 pF.
2. Guaranteed by characterization results.

Figure 56. Asynchronous non-multiplexed SRAM/PSRAM/NOR write waveforms

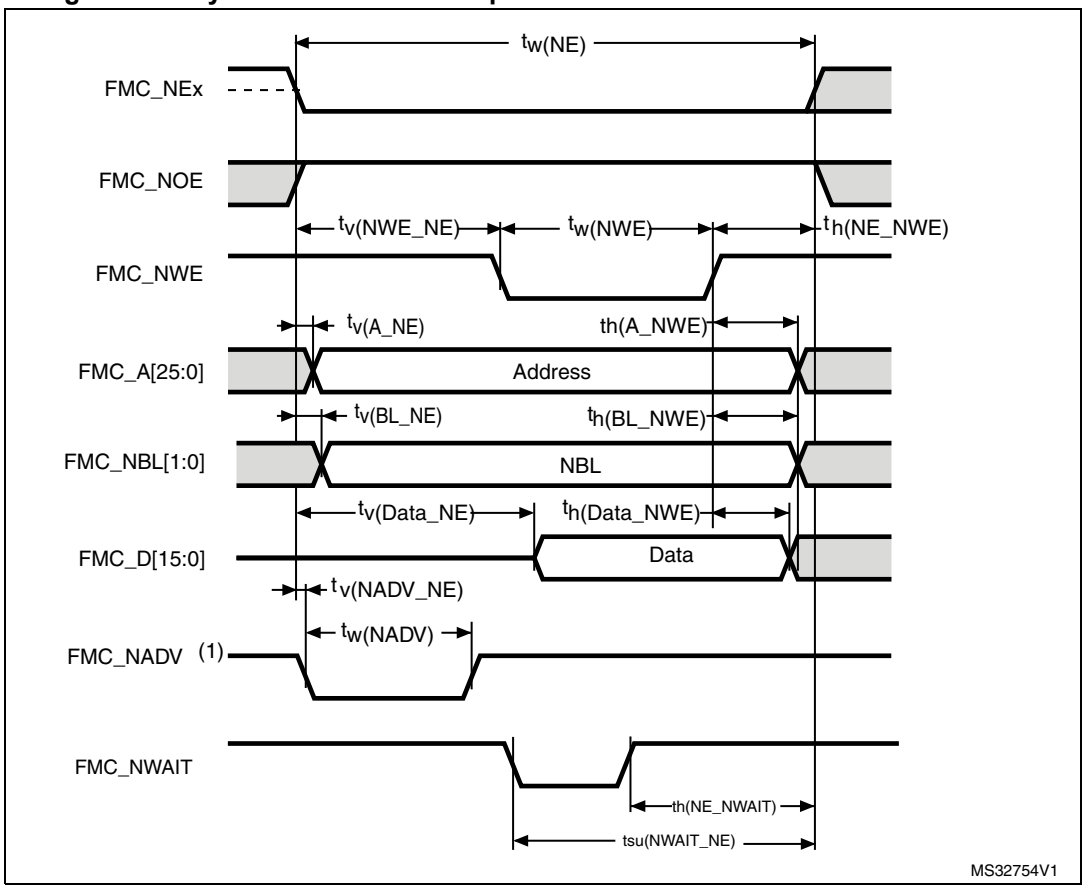

1. Mode 2/B, C and D only. In Mode 1, FMC_NADV is not used.

Table 88. Asynchronous non-multiplexed SRAM/PSRAM/NOR write timings(1)(2)

Symbol	Parameter	Min	Max	Unit
$t_{w(NE)}$	FMC_NE low time	$3T_{HCLK}$	$3T_{HCLK}+1$	ns
$t_{v(NWE_NE)}$	FMC_NEx low to FMC_NWE low	$T_{HCLK} - 0.5$	$T_{HCLK}+ 0.5$	ns
$t_{w(NWE)}$	FMC_NWE low time	T_{HCLK}	$T_{HCLK}+ 0.5$	ns
$t_{h(NE_NWE)}$	FMC_NWE high to FMC_NE high hold time	$T_{HCLK} +1.5$	-	ns
$t_{v(A_NE)}$	FMC_NEx low to FMC_A valid	-	0	ns
$t_{h(A_NWE)}$	Address hold time after FMC_NWE high	$T_{HCLK}+0.5$	-	ns
$t_{v(BL_NE)}$	FMC_NEx low to FMC_BL valid	-	1.5	ns
$t_{h(BL_NWE)}$	FMC_BL hold time after FMC_NWE high	$T_{HCLK}+0.5$	-	ns
$t_{v(Data_NE)}$	Data to FMC_NEx low to Data valid	-	$T_{HCLK}+ 2$	ns
$t_{h(Data_NWE)}$	Data hold time after FMC_NWE high	$T_{HCLK}+0.5$	-	ns
$t_{v(NADV_NE)}$	FMC_NEx low to FMC_NADV low	-	0.5	ns
$t_{w(NADV)}$	FMC_NADV low time	-	$T_{HCLK}+ 0.5$	ns

1. C_L = 30 pF.
2. Guaranteed by characterization results.

Table 89. Asynchronous non-multiplexed SRAM/PSRAM/NOR write - NWAIT timings(1)(2)

Symbol	Parameter	Min	Max	Unit
$t_{w(NE)}$	FMC_NE low time	$8T_{HCLK}+1$	$8T_{HCLK}+2$	ns
$t_{w(NWE)}$	FMC_NWE low time	$6T_{HCLK} - 1$	$6T_{HCLK}+2$	ns
$t_{su(NWAIT_NE)}$	FMC_NWAIT valid before FMC_NEx high	$6T_{HCLK}+1.5$	-	ns
$t_{h(NE_NWAIT)}$	FMC_NEx hold time after FMC_NWAIT invalid	$4T_{HCLK}+1$		ns

1. C_L = 30 pF.
2. Guaranteed by characterization results.

Figure 57. Asynchronous multiplexed PSRAM/NOR read waveforms

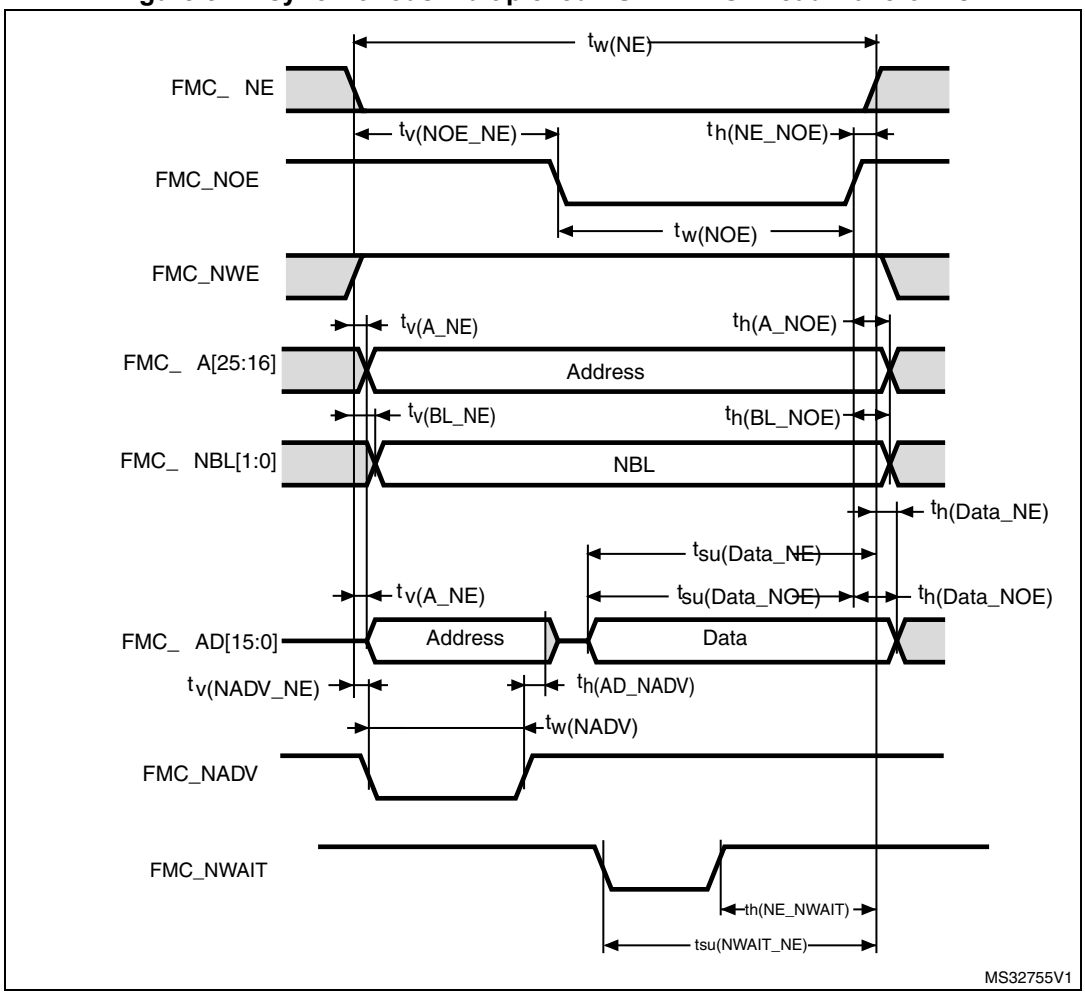

Table 90. Asynchronous multiplexed PSRAM/NOR read timings(1)(2)

Symbol	Parameter	Min	Max	Unit
$t_{w(NE)}$	FMC_NE low time	$3T_{HCLK} - 1$	$3T_{HCLK}+0.5$	ns
$t_{v(NOE_NE)}$	FMC_NEx low to FMC_NOE low	$2T_{HCLK} - 0.5$	$2T_{HCLK}$	ns
$t_{tw(NOE)}$	FMC_NOE low time	$T_{HCLK} - 1$	$T_{HCLK}+1$	ns
$t_{h(NE_NOE)}$	FMC_NOE high to FMC_NE high hold time	1	-	ns
$t_{v(A_NE)}$	FMC_NEx low to FMC_A valid	-	2	ns
$t_{v(NADV_NE)}$	FMC_NEx low to FMC_NADV low	0	2	ns
$t_{w(NADV)}$	FMC_NADV low time	$T_{HCLK} - 0.5$	$T_{HCLK}+0.5$	ns
$t_{h(AD_NADV)}$	FMC_AD(address) valid hold time after FMC_NADV high)	0	-	ns
$t_{h(A_NOE)}$	Address hold time after FMC_NOE high	$T_{HCLK} - 0.5$	-	ns
$t_{h(BL_NOE)}$	FMC_BL time after FMC_NOE high	0	-	ns
$t_{v(BL_NE)}$	FMC_NEx low to FMC_BL valid	-	2	ns
$t_{su(Data_NE)}$	Data to FMC_NEx high setup time	$T_{HCLK}+1.5$	-	ns
$t_{su(Data_NOE)}$	Data to FMC_NOE high setup time	$T_{HCLK}+1$	-	ns
$t_{h(Data_NE)}$	Data hold time after FMC_NEx high	0	-	ns
$t_{h(Data_NOE)}$	Data hold time after FMC_NOE high	0	-	ns

1. C_L = 30 pF.
2. Guaranteed by characterization results.

Table 91. Asynchronous multiplexed PSRAM/NOR read-NWAIT timings(1)(2)

Symbol	Parameter	Min	Max	Unit
$t_{w(NE)}$	FMC_NE low time	$8T_{HCLK}+0.5$	$8T_{HCLK}+2$	ns
$t_{w(NOE)}$	FMC_NWE low time	$5T_{HCLK} - 1$	$5T_{HCLK} +1.5$	ns
$t_{su(NWAIT_NE)}$	FMC_NWAIT valid before FMC_NEx high	$5T_{HCLK} +1.5$	-	ns
$t_{h(NE_NWAIT)}$	FMC_NEx hold time after FMC_NWAIT invalid	$4T_{HCLK}+1$		ns

1. C_L = 30 pF.
2. Guaranteed by characterization results.

Figure 58. Asynchronous multiplexed PSRAM/NOR write waveforms

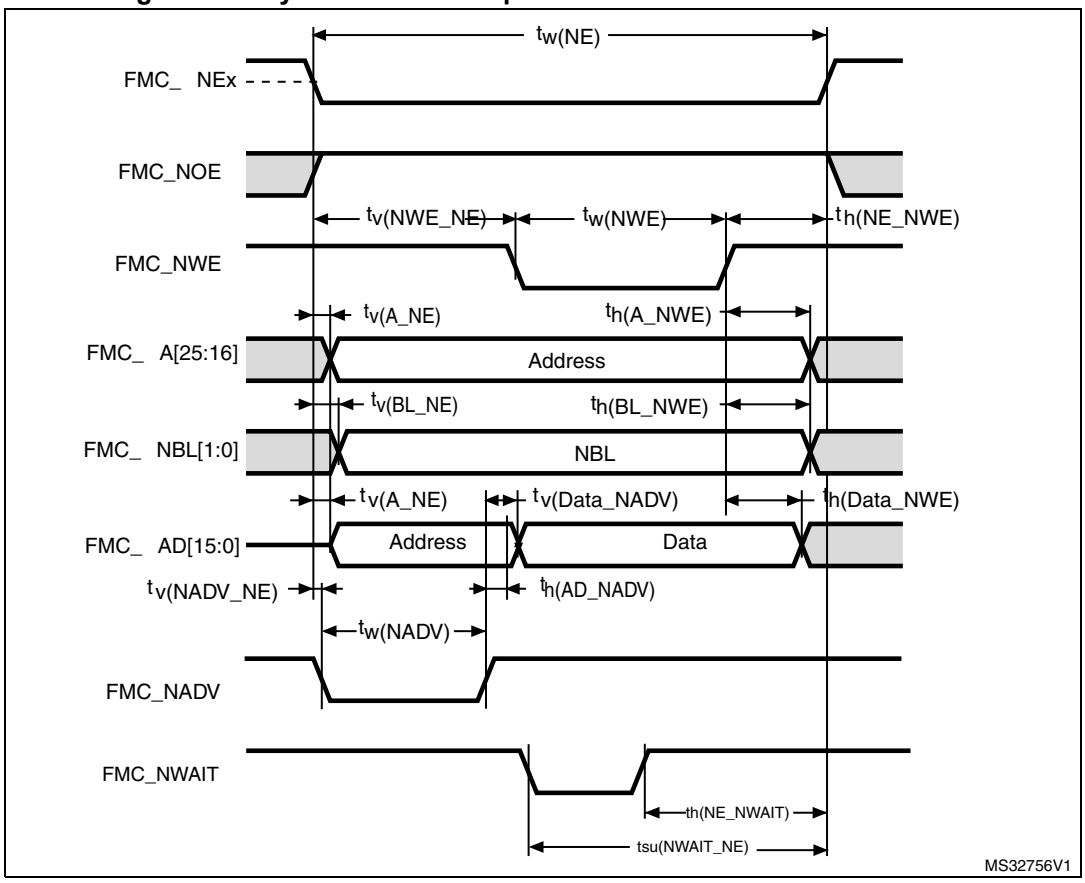

Table 92. Asynchronous multiplexed PSRAM/NOR write timings(1)(2)

Symbol	Parameter	Min	Max	Unit
$t_{w(NE)}$	FMC_NE low time	$4T_{HCLK}$	$4T_{HCLK}$+0.5	ns
$t_{v(NWE_NE)}$	FMC_NEx low to FMC_NWE low	T_{HCLK} − 1	T_{HCLK}+0.5	ns
$t_{w(NWE)}$	FMC_NWE low time	$2T_{HCLK}$	$2T_{HCLK}$+0.5	ns
$t_{h(NE_NWE)}$	FMC_NWE high to FMC_NE high hold time	T_{HCLK}	-	ns
$t_{v(A_NE)}$	FMC_NEx low to FMC_A valid	-	0	ns
$t_{v(NADV_NE)}$	FMC_NEx low to FMC_NADV low	0.5	1	ns
$t_{w(NADV)}$	FMC_NADV low time	T_{HCLK} − 0.5	T_{HCLK}+ 0.5	ns
$t_{h(AD_NADV)}$	FMC_AD(adress) valid hold time after FMC_NADV high)	T_{HCLK} − 2	-	ns
$t_{h(A_NWE)}$	Address hold time after FMC_NWE high	T_{HCLK}	-	ns
$t_{h(BL_NWE)}$	FMC_BL hold time after FMC_NWE high	T_{HCLK} − 2	-	ns
$t_{v(BL_NE)}$	FMC_NEx low to FMC_BL valid	-	2	ns
$t_{v(Data_NADV)}$	FMC_NADV high to Data valid	-	T_{HCLK} +1.5	ns
$t_{h(Data_NWE)}$	Data hold time after FMC_NWE high	T_{HCLK} +0.5	-	ns

1. C_L = 30 pF.
2. Guaranteed by characterization results.

Table 93. Asynchronous multiplexed PSRAM/NOR write-NWAIT timings(1)(2)

Symbol	Parameter	Min	Max	Unit
$t_{w(NE)}$	FMC_NE low time	$9T_{HCLK}$	$9T_{HCLK}+0.5$	ns
$t_{w(NWE)}$	FMC_NWE low time	$7T_{HCLK}$	$7T_{HCLK}+2$	ns
$t_{su(NWAIT_NE)}$	FMC_NWAIT valid before FMC_NEx high	$6T_{HCLK}+1.5$	-	ns
$t_{h(NE_NWAIT)}$	FMC_NEx hold time after FMC_NWAIT invalid	$4T_{HCLK}-1$	-	ns

1. C_L = 30 pF.
2. Guaranteed by characterization results.

Synchronous waveforms and timings

Figure 59 through *Figure 62* represent synchronous waveforms and *Table 94* through *Table 97* provide the corresponding timings. The results shown in these tables are obtained with the following FMC configuration:

- BurstAccessMode = FMC_BurstAccessMode_Enable;
- MemoryType = FMC_MemoryType_CRAM;
- WriteBurst = FMC_WriteBurst_Enable;
- CLKDivision = 1; (0 is not supported, see the STM32F4xx reference manual : RM0090)
- DataLatency = 1 for NOR Flash; DataLatency = 0 for PSRAM

In all timing tables, the T_{HCLK} is the HCLK clock period (with maximum FMC_CLK = 90 MHz).

Figure 59. Synchronous multiplexed NOR/PSRAM read timings

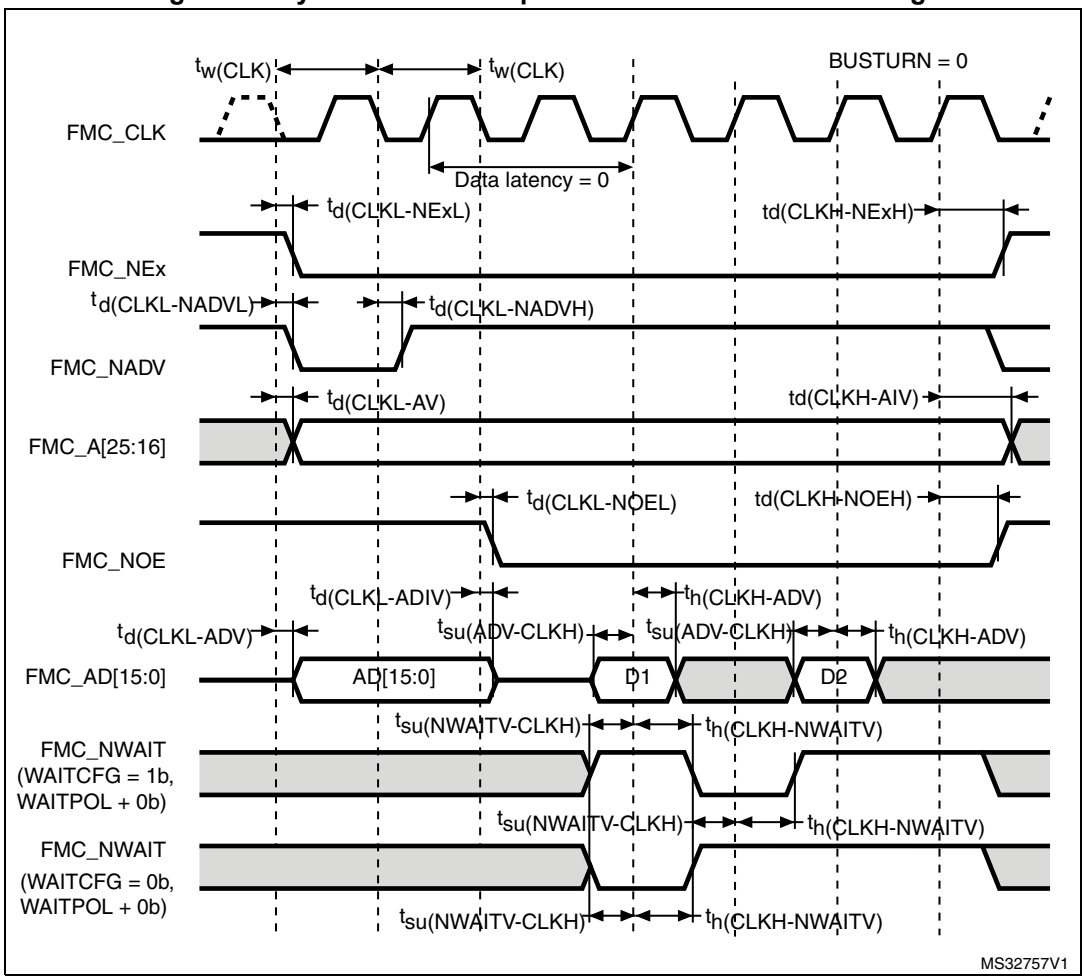

Table 94. Synchronous multiplexed NOR/PSRAM read timings(1)(2)

Symbol	Parameter	Min	Max	Unit
$t_{w(CLK)}$	FMC_CLK period	$2T_{HCLK} - 1$	-	ns
$t_{d(CLKL-NExL)}$	FMC_CLK low to FMC_NEx low (x=0..2)	-	0	ns
$t_{d(CLKH_NExH)}$	FMC_CLK high to FMC_NEx high (x= 0…2)	T_{HCLK}	-	ns
$t_{d(CLKL-NADVL)}$	FMC_CLK low to FMC_NADV low	-	0	ns
$t_{d(CLKL-NADVH)}$	FMC_CLK low to FMC_NADV high	0	-	ns
$t_{d(CLKL-AV)}$	FMC_CLK low to FMC_Ax valid (x=16…25)	-	0	ns
$t_{d(CLKH-AIV)}$	FMC_CLK high to FMC_Ax invalid (x=16…25)	0	-	ns
$t_{d(CLKL-NOEL)}$	FMC_CLK low to FMC_NOE low	-	T_{HCLK}+0.5	ns
$t_{d(CLKH-NOEH)}$	FMC_CLK high to FMC_NOE high	$T_{HCLK} - 0.5$	-	ns
$t_{d(CLKL-ADV)}$	FMC_CLK low to FMC_AD[15:0] valid	-	0.5	ns
$t_{d(CLKL-ADIV)}$	FMC_CLK low to FMC_AD[15:0] invalid	0	-	ns

Table 94. Synchronous multiplexed NOR/PSRAM read timings(1)(2) (continued)

Symbol	Parameter	Min	Max	Unit
$t_{su(ADV-CLKH)}$	FMC_A/D[15:0] valid data before FMC_CLK high	5	-	ns
$t_{h(CLKH-ADV)}$	FMC_A/D[15:0] valid data after FMC_CLK high	0	-	ns
$t_{su(NWAIT-CLKH)}$	FMC_NWAIT valid before FMC_CLK high	4	-	ns
$t_{h(CLKH-NWAIT)}$	FMC_NWAIT valid after FMC_CLK high	0	-	ns

1. C_L = 30 pF.
2. Guaranteed by characterization results.

Figure 60. Synchronous multiplexed PSRAM write timings

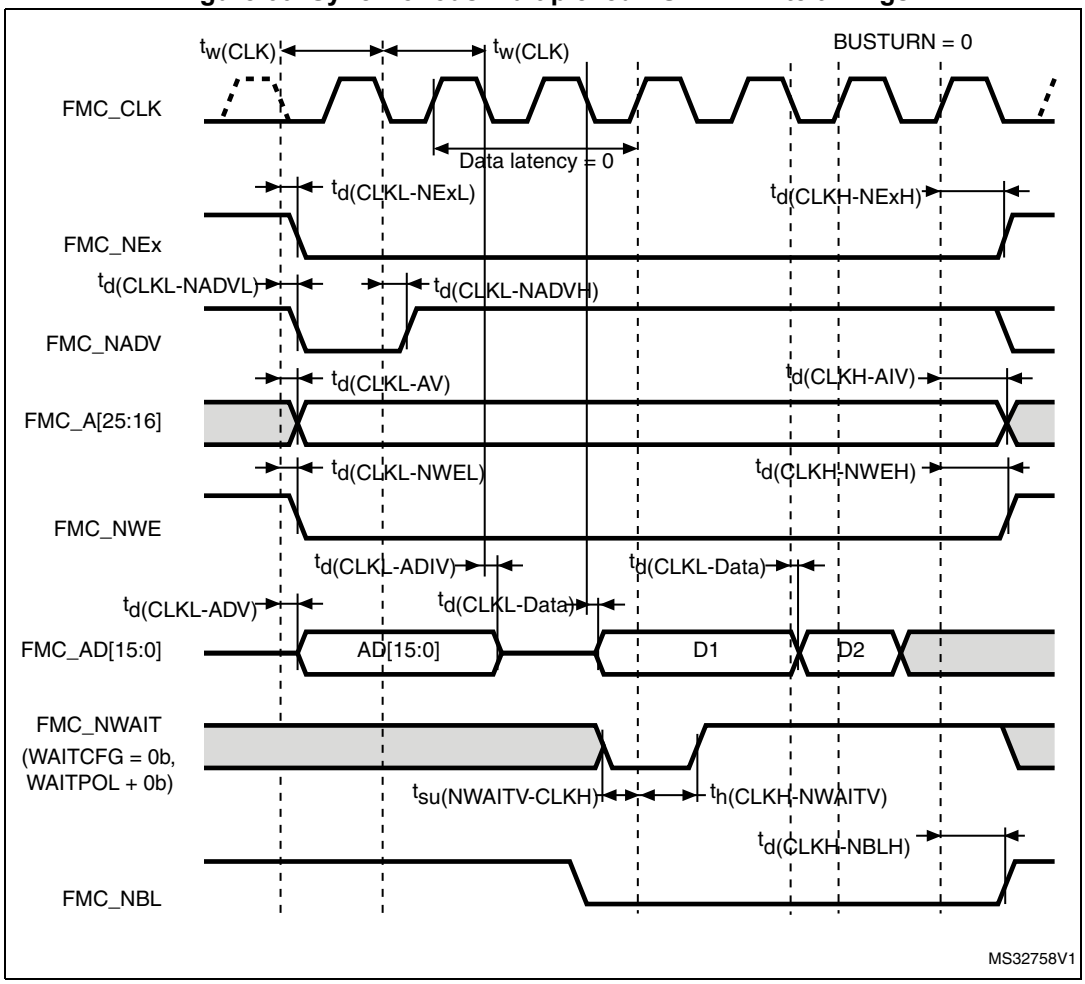

Table 95. Synchronous multiplexed PSRAM write timings(1)(2)

Symbol	Parameter	Min	Max	Unit
$t_{w(CLK)}$	FMC_CLK period, VDD range= 2.7 to 3.6 V	$2T_{HCLK} - 1$	-	ns
$t_{d(CLKL-NExL)}$	FMC_CLK low to FMC_NEx low (x=0..2)	-	1.5	ns
$t_{d(CLKH-NExH)}$	FMC_CLK high to FMC_NEx high (x= 0…2)	T_{HCLK}	-	ns
$t_{d(CLKL-NADVL)}$	FMC_CLK low to FMC_NADV low	-	0	ns
$t_{d(CLKL-NADVH)}$	FMC_CLK low to FMC_NADV high	0	-	ns
$t_{d(CLKL-AV)}$	FMC_CLK low to FMC_Ax valid (x=16…25)	-	0	ns
$t_{d(CLKH-AIV)}$	FMC_CLK high to FMC_Ax invalid (x=16…25)	T_{HCLK}	-	ns
$t_{d(CLKL-NWEL)}$	FMC_CLK low to FMC_NWE low	-	0	ns
$t_{(CLKH-NWEH)}$	FMC_CLK high to FMC_NWE high	$T_{HCLK}-0.5$	-	ns
$t_{d(CLKL-ADV)}$	FMC_CLK low to FMC_AD[15:0] valid	-	3	ns
$t_{d(CLKL-ADIV)}$	FMC_CLK low to FMC_AD[15:0] invalid	0	-	ns
$t_{d(CLKL-DATA)}$	FMC_A/D[15:0] valid data after FMC_CLK low	-	3	ns
$t_{d(CLKL-NBLL)}$	FMC_CLK low to FMC_NBL low	0	-	ns
$t_{d(CLKH-NBLH)}$	FMC_CLK high to FMC_NBL high	$T_{HCLK}-0.5$	-	ns
$t_{su(NWAIT-CLKH)}$	FMC_NWAIT valid before FMC_CLK high	4	-	ns
$t_{h(CLKH-NWAIT)}$	FMC_NWAIT valid after FMC_CLK high	0	-	ns

1. C_L = 30 pF.
2. Guaranteed by characterization results.

Figure 61. Synchronous non-multiplexed NOR/PSRAM read timings

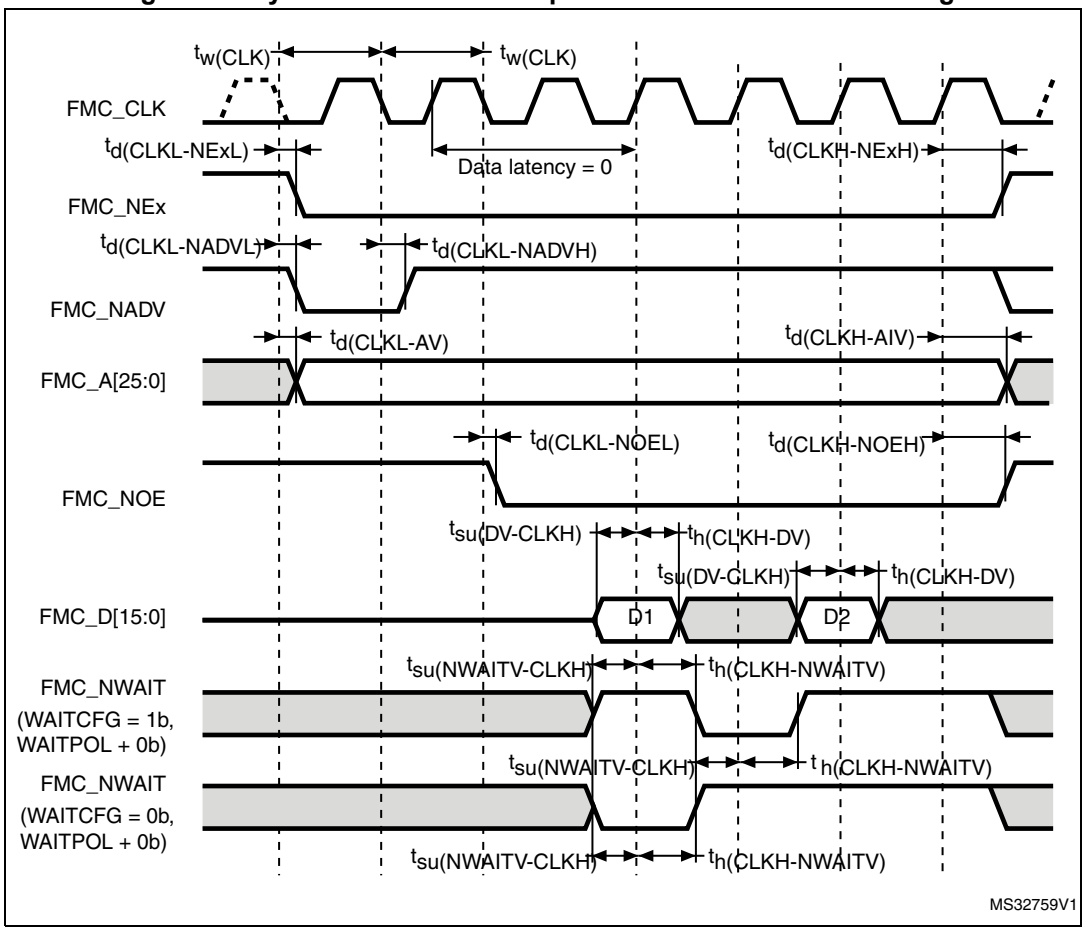

Table 96. Synchronous non-multiplexed NOR/PSRAM read timings(1)(2)

Symbol	Parameter	Min	Max	Unit
$t_{w(CLK)}$	FMC_CLK period	$2T_{HCLK} - 1$	-	ns
$t_{(CLKL-NExL)}$	FMC_CLK low to FMC_NEx low (x=0..2)	-	0.5	ns
$t_{d(CLKH-NExH)}$	FMC_CLK high to FMC_NEx high (x= 0…2)	T_{HCLK}	-	ns
$t_{d(CLKL-NADVL)}$	FMC_CLK low to FMC_NADV low	-	0	ns
$t_{d(CLKL-NADVH)}$	FMC_CLK low to FMC_NADV high	0	-	ns
$t_{d(CLKL-AV)}$	FMC_CLK low to FMC_Ax valid (x=16…25)	-	0	ns
$t_{d(CLKH-AIV)}$	FMC_CLK high to FMC_Ax invalid (x=16…25)	$T_{HCLK} - 0.5$	-	ns
$t_{d(CLKL-NOEL)}$	FMC_CLK low to FMC_NOE low	-	$T_{HCLK}+2$	ns
$t_{d(CLKH-NOEH)}$	FMC_CLK high to FMC_NOE high	$T_{HCLK} - 0.5$	-	ns
$t_{su(DV-CLKH)}$	FMC_D[15:0] valid data before FMC_CLK high	5	-	ns

Table 96. Synchronous non-multiplexed NOR/PSRAM read timings(1)(2) (continued)

Symbol	Parameter	Min	Max	Unit
$t_{h(CLKH-DV)}$	FMC_D[15:0] valid data after FMC_CLK high	0	-	ns
$t_{(NWAIT-CLKH)}$	FMC_NWAIT valid before FMC_CLK high	4		
$t_{h(CLKH-NWAIT)}$	FMC_NWAIT valid after FMC_CLK high	0		

1. C_L = 30 pF.
2. Guaranteed by characterization results.

Figure 62. Synchronous non-multiplexed PSRAM write timings

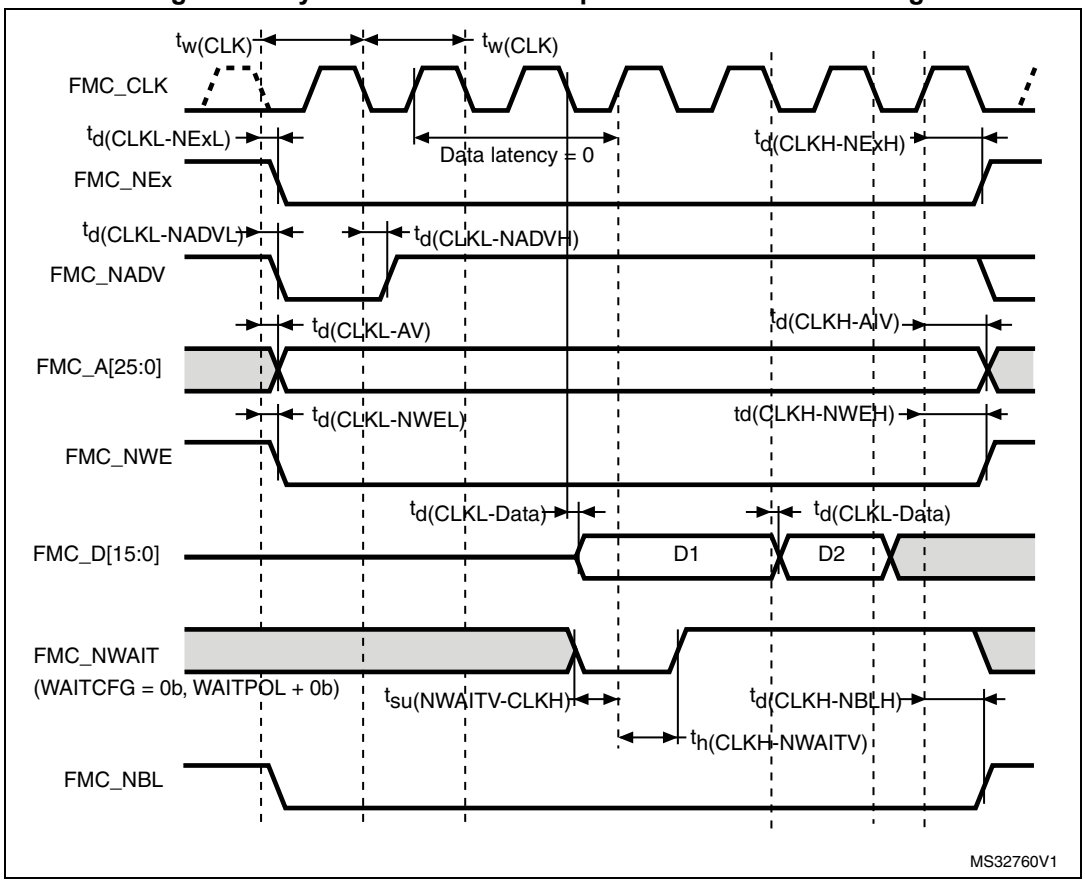

Table 97. Synchronous non-multiplexed PSRAM write timings(1)(2)

Symbol	Parameter	Min	Max	Unit
$t_{(CLK)}$	FMC_CLK period	$2T_{HCLK} - 1$	-	ns
$t_{d(CLKL-NExL)}$	FMC_CLK low to FMC_NEx low (x=0..2)	-	0.5	ns
$t_{(CLKH-NExH)}$	FMC_CLK high to FMC_NEx high (x= 0…2)	T_{HCLK}	-	ns
$t_{d(CLKL-NADVL)}$	FMC_CLK low to FMC_NADV low	-	0	ns
$t_{d(CLKL-NADVH)}$	FMC_CLK low to FMC_NADV high	0	-	ns
$t_{d(CLKL-AV)}$	FMC_CLK low to FMC_Ax valid (x=16…25)	-	0	ns

Table 97. Synchronous non-multiplexed PSRAM write timings(1)(2) (continued)

Symbol	Parameter	Min	Max	Unit
$t_{d(CLKH-AIV)}$	FMC_CLK high to FMC_Ax invalid (x=16…25)	0	-	ns
$t_{d(CLKL-NWEL)}$	FMC_CLK low to FMC_NWE low	-	0	ns
$t_{d(CLKH-NWEH)}$	FMC_CLK high to FMC_NWE high	$T_{HCLK}-0.5$	-	ns
$t_{d(CLKL-Data)}$	FMC_D[15:0] valid data after FMC_CLK low	-	2.5	ns
$t_{d(CLKL-NBLL)}$	FMC_CLK low to FMC_NBL low	0	-	ns
$t_{d(CLKH-NBLH)}$	FMC_CLK high to FMC_NBL high	$T_{HCLK}-0.5$	-	ns
$t_{su(NWAIT-CLKH)}$	FMC_NWAIT valid before FMC_CLK high	4		
$t_{h(CLKH-NWAIT)}$	FMC_NWAIT valid after FMC_CLK high	0		

1. C_L = 30 pF.
2. Guaranteed by characterization results.

PC Card/CompactFlash controller waveforms and timings

Figure 63 through *Figure 68* represent synchronous waveforms, and *Table 98* and *Table 99* provide the corresponding timings. The results shown in this table are obtained with the following FMC configuration:

- COM.FMC_SetupTime = 0x04;
- COM.FMC_WaitSetupTime = 0x07;
- COM.FMC_HoldSetupTime = 0x04;
- COM.FMC_HiZSetupTime = 0x00;
- ATT.FMC_SetupTime = 0x04;
- ATT.FMC_WaitSetupTime = 0x07;
- ATT.FMC_HoldSetupTime = 0x04;
- ATT.FMC_HiZSetupTime = 0x00;
- IO.FMC_SetupTime = 0x04;
- IO.FMC_WaitSetupTime = 0x07;
- IO.FMC_HoldSetupTime = 0x04;
- IO.FMC_HiZSetupTime = 0x00;
- TCLRSetupTime = 0;
- TARSetupTime = 0.

In all timing tables, the T_{HCLK} is the HCLK clock period.

Figure 63. PC Card/CompactFlash controller waveforms for common memory read access

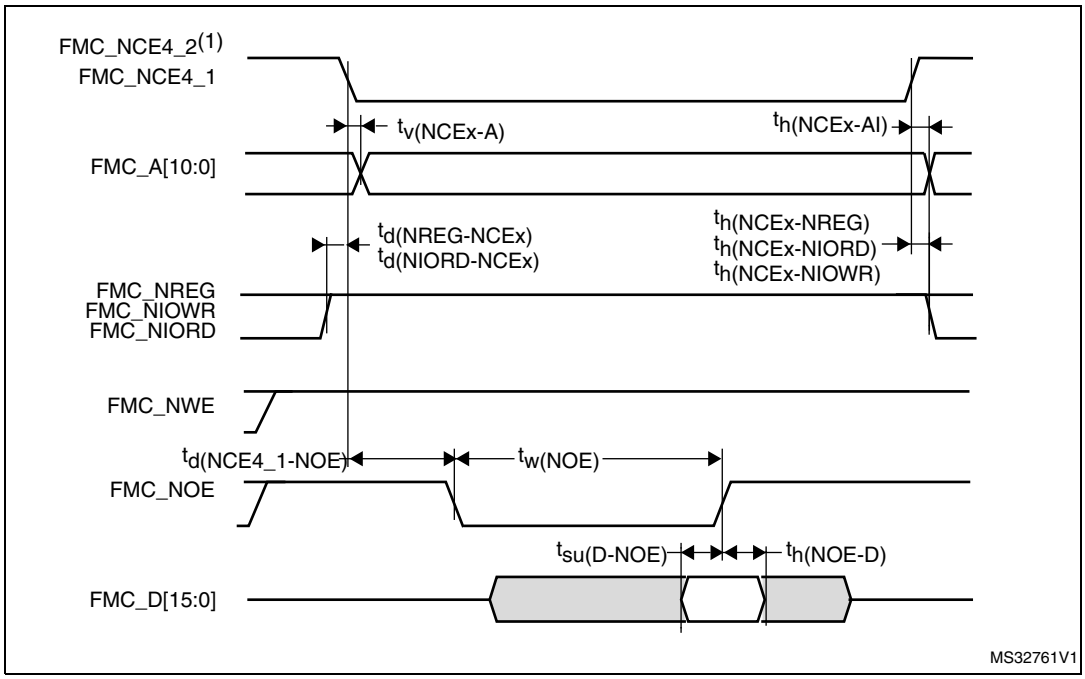

1. FMC_NCE4_2 remains high (inactive during 8-bit access.

Figure 64. PC Card/CompactFlash controller waveforms for common memory write access

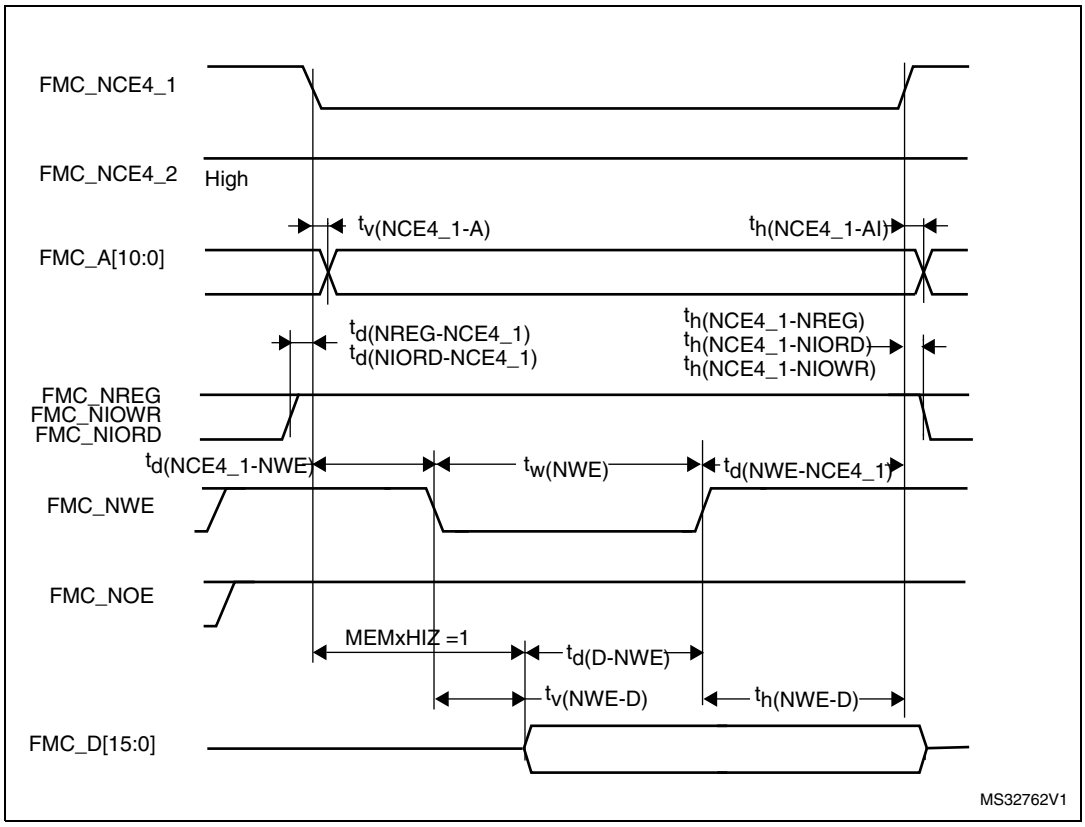

Figure 65. PC Card/CompactFlash controller waveforms for attribute memory read access

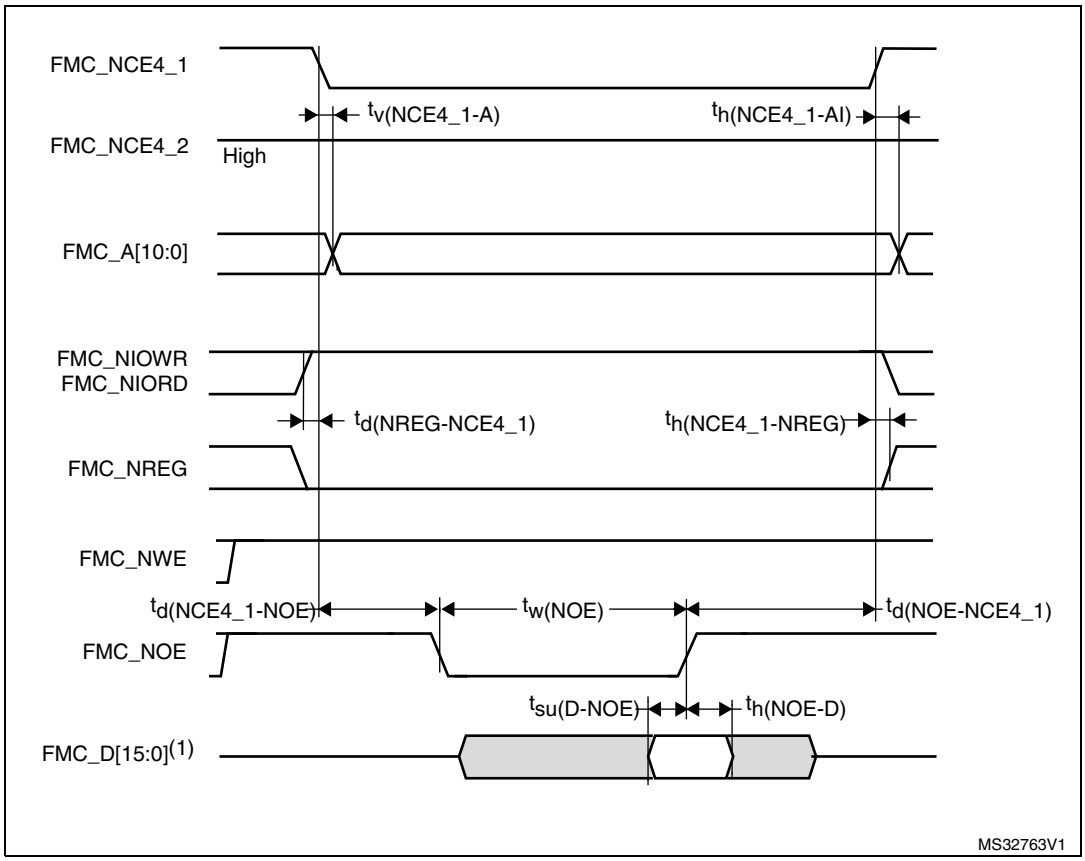

1. Only data bits 0...7 are read (bits 8...15 are disregarded).

Figure 66. PC Card/CompactFlash controller waveforms for attribute memory write access

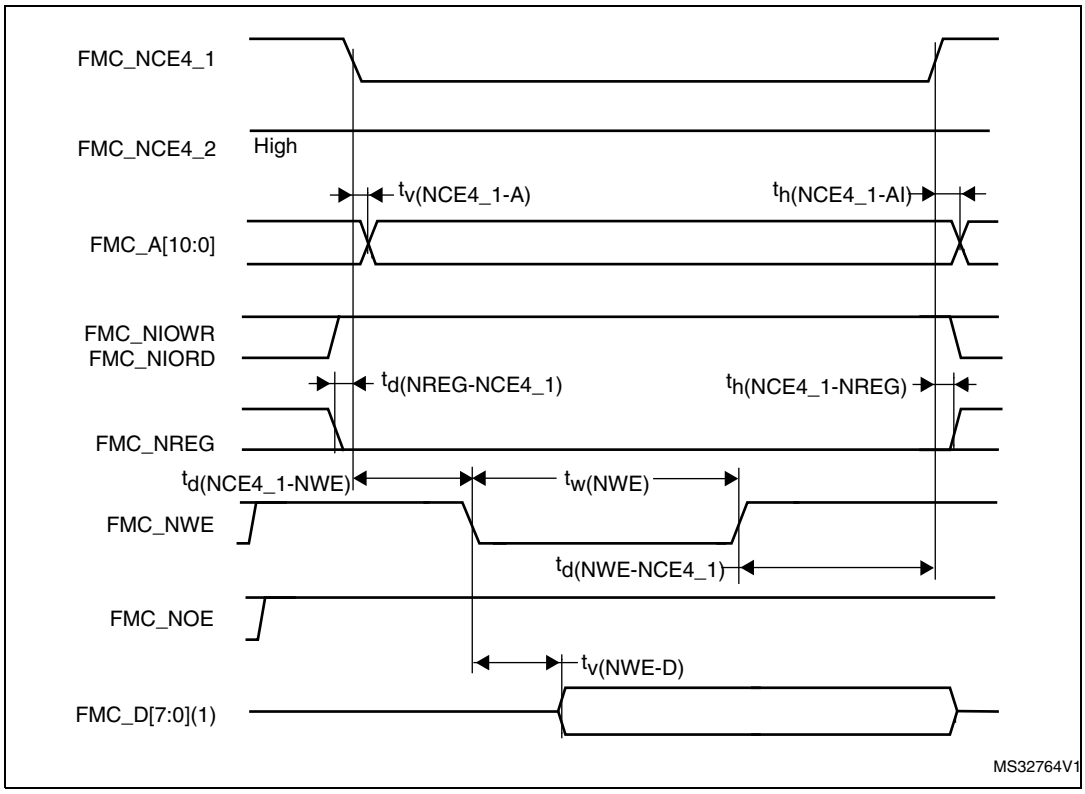

1. Only data bits 0...7 are driven (bits 8...15 remains Hi-Z).

Figure 67. PC Card/CompactFlash controller waveforms for I/O space read access

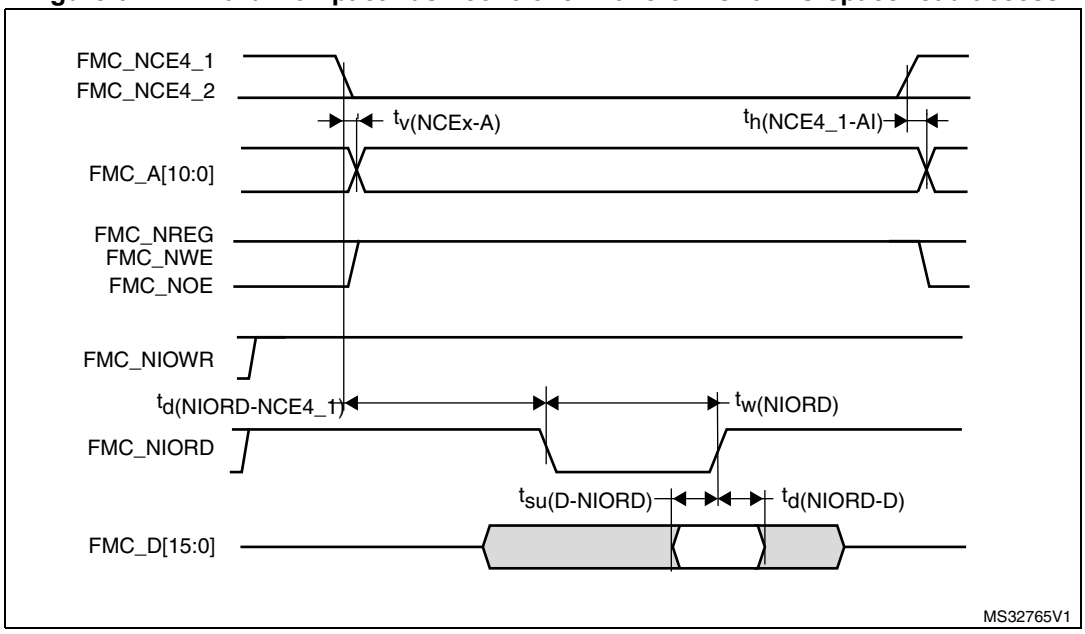

Figure 68. PC Card/CompactFlash controller waveforms for I/O space write access

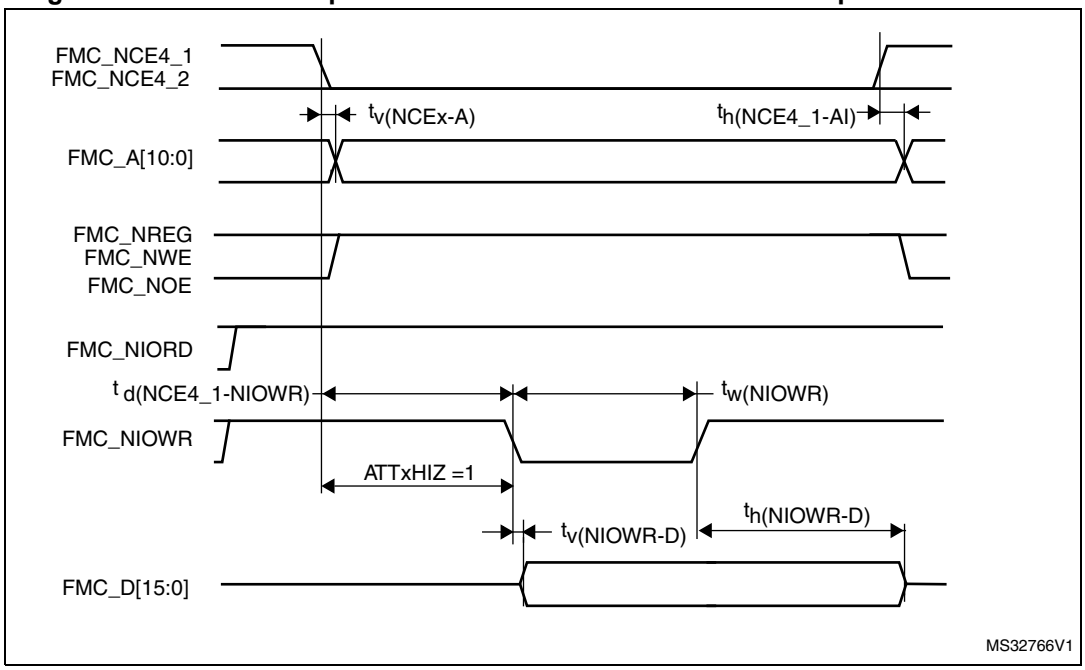

Table 98. Switching characteristics for PC Card/CF read and write cycles in attribute/common space(1)(2)

Symbol	Parameter	Min	Max	Unit
$t_{v(NCEx-A)}$	FMC_Ncex low to FMC_Ay valid	-	0	ns
$t_{h(NCEx_AI)}$	FMC_NCEx high to FMC_Ax invalid	0	-	ns
$t_{d(NREG-NCEx)}$	FMC_NCEx low to FMC_NREG valid	-	1	ns
$t_{h(NCEx-NREG)}$	FMC_NCEx high to FMC_NREG invalid	$T_{HCLK} - 2$	-	ns
$t_{d(NCEx-NWE)}$	FMC_NCEx low to FMC_NWE low	-	$5T_{HCLK}$	ns
$t_{w(NWE)}$	FMC_NWE low width	$8T_{HCLK} - 0.5$	$8T_{HCLK}+0.5$	ns
$t_{d(NWE_NCEx)}$	FMC_NWE high to FMC_NCEx high	$5T_{HCLK}+1$	-	ns
$t_{V(NWE-D)}$	FMC_NWE low to FMC_D[15:0] valid	-	0	ns
$t_{h(NWE-D)}$	FMC_NWE high to FMC_D[15:0] invalid	$9T_{HCLK} - 0.5$	-	ns
$t_{d(D-NWE)}$	FMC_D[15:0] valid before FMC_NWE high	$13T_{HCLK} - 3$		ns
$t_{d(NCEx-NOE)}$	FMC_NCEx low to FMC_NOE low	-	$5T_{HCLK}$	ns
$t_{w(NOE)}$	FMC_NOE low width	$8\ T_{HCLK} - 0.5$	$8\ T_{HCLK}+0.5$	ns
$t_{d(NOE_NCEx)}$	FMC_NOE high to FMC_NCEx high	$5T_{HCLK} - 1$	-	ns
$t_{su\ (D-NOE)}$	FMC_D[15:0] valid data before FMC_NOE high	T_{HCLK}	-	ns
$t_{h(NOE-D)}$	FMC_NOE high to FMC_D[15:0] invalid	0	-	ns

1. C_L = 30 pF.
2. Guaranteed by characterization results.

Table 99. Switching characteristics for PC Card/CF read and write cycles in I/O space(1)(2)

Symbol	Parameter	Min	Max	Unit
tw(NIOWR)	FMC_NIOWR low width	$8T_{HCLK} - 0.5$	-	ns
tv(NIOWR-D)	FMC_NIOWR low to FMC_D[15:0] valid	-	0	ns
th(NIOWR-D)	FMC_NIOWR high to FMC_D[15:0] invalid	$9T_{HCLK} - 2$	-	ns
td(NCE4_1-NIOWR)	FMC_NCE4_1 low to FMC_NIOWR valid	-	$5T_{HCLK}$	ns
th(NCEx-NIOWR)	FMC_NCEx high to FMC_NIOWR invalid	$5T_{HCLK}$	-	ns
td(NIORD-NCEx)	FMC_NCEx low to FMC_NIORD valid	-	$5T_{HCLK}$	ns
th(NCEx-NIORD)	FMC_NCEx high to FMC_NIORD) valid	$6T_{HCLK}+2$	-	ns
tw(NIORD)	FMC_NIORD low width	$8T_{HCLK} - 0.5$	$8T_{HCLK}+0.5$	ns
tsu(D-NIORD)	FMC_D[15:0] valid before FMC_NIORD high	T_{HCLK}	-	ns
td(NIORD-D)	FMC_D[15:0] valid after FMC_NIORD high	0	-	ns

1. C_L = 30 pF.
2. Guaranteed by characterization results.

NAND controller waveforms and timings

Figure 69 through *Figure 72* represent synchronous waveforms, and *Table 100* and *Table 101* provide the corresponding timings. The results shown in this table are obtained with the following FMC configuration:

- COM.FMC_SetupTime = 0x01;
- COM.FMC_WaitSetupTime = 0x03;
- COM.FMC_HoldSetupTime = 0x02;
- COM.FMC_HiZSetupTime = 0x01;
- ATT.FMC_SetupTime = 0x01;
- ATT.FMC_WaitSetupTime = 0x03;
- ATT.FMC_HoldSetupTime = 0x02;
- ATT.FMC_HiZSetupTime = 0x01;
- Bank = FMC_Bank_NAND;
- MemoryDataWidth = FMC_MemoryDataWidth_16b;
- ECC = FMC_ECC_Enable;
- ECCPageSize = FMC_ECCPageSize_512Bytes;
- TCLRSetupTime = 0;
- TARSetupTime = 0.

In all timing tables, the T_{HCLK} is the HCLK clock period.

Figure 69. NAND controller waveforms for read access

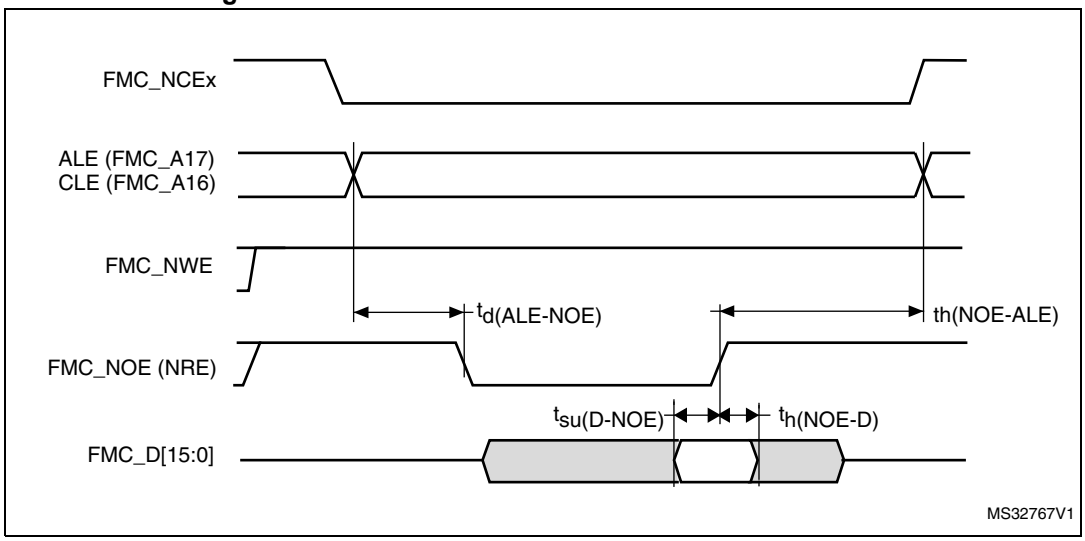

Figure 70. NAND controller waveforms for write access

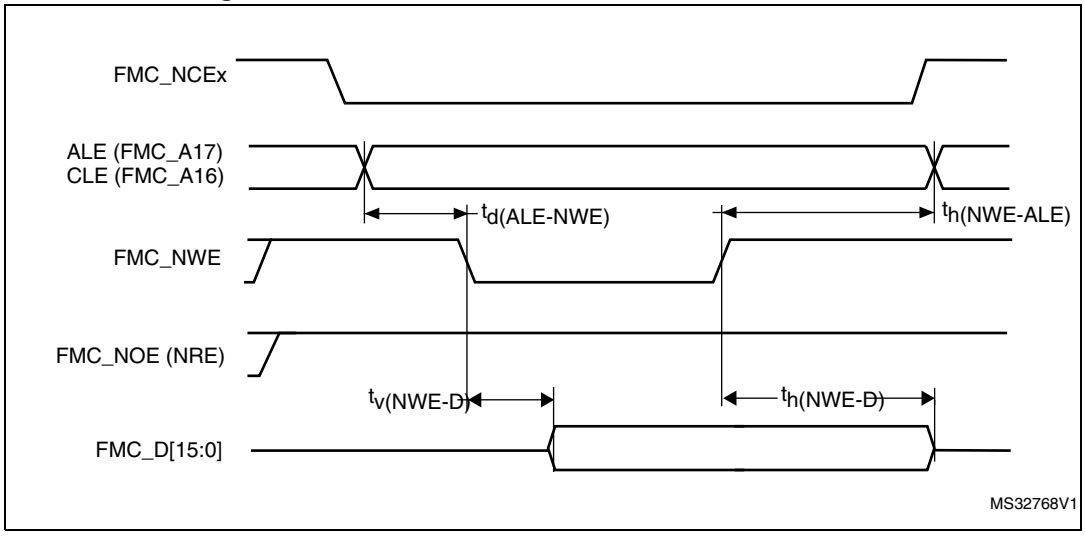

Figure 71. NAND controller waveforms for common memory read access

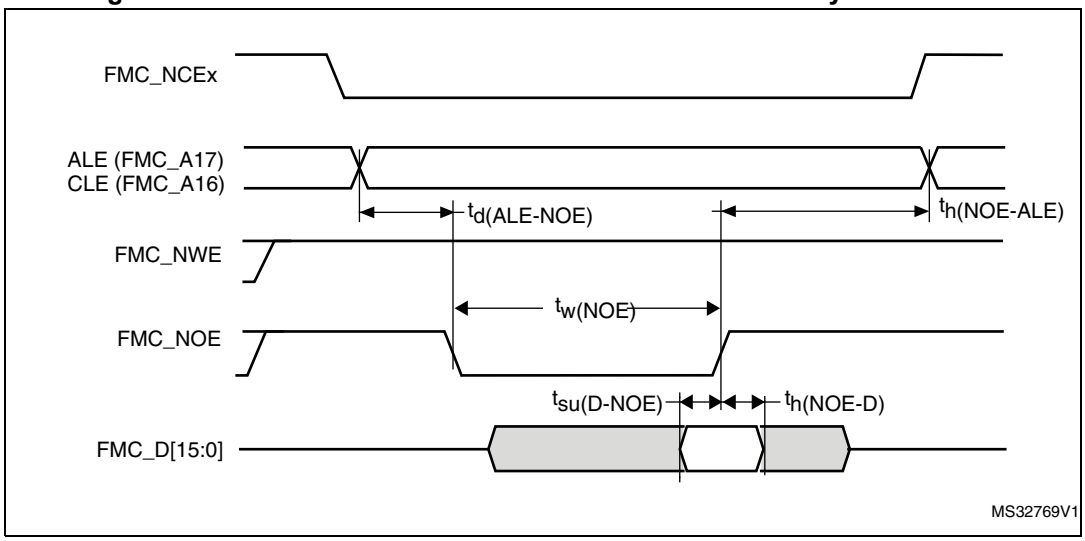

Figure 72. NAND controller waveforms for common memory write access

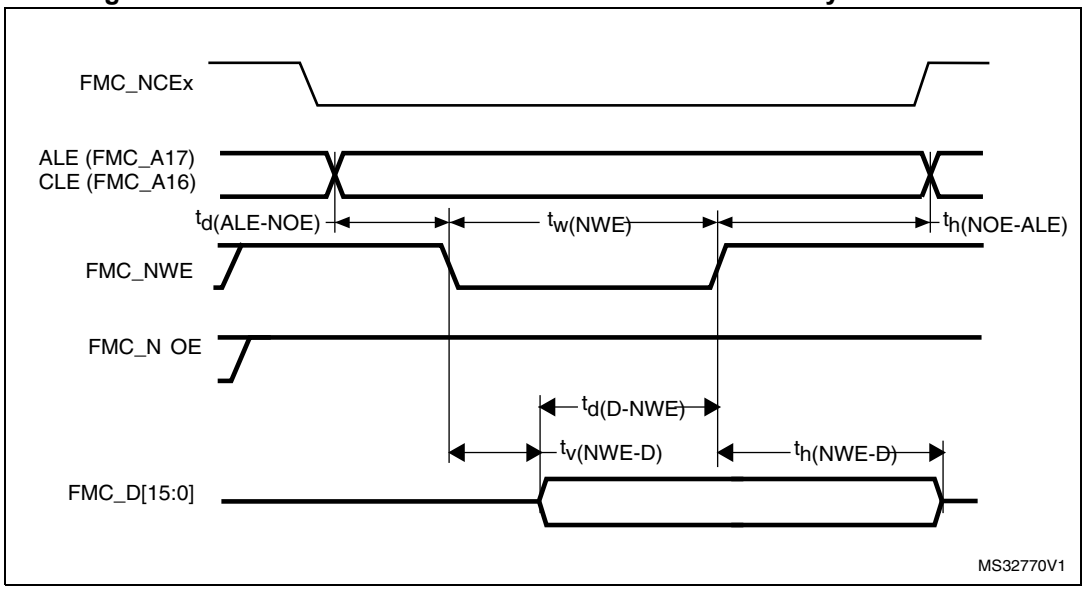

Table 100. Switching characteristics for NAND Flash read cycles(1)

Symbol	Parameter	Min	Max	Unit
$t_{w(N0E)}$	FMC_NOE low width	$4T_{HCLK} - 0.5$	$4T_{HCLK}+0.5$	ns
$t_{su(D-NOE)}$	FMC_D[15-0] valid data before FMC_NOE high	9	-	ns
$t_{h(NOE-D)}$	FMC_D[15-0] valid data after FMC_NOE high	0	-	ns
$t_{d(ALE-NOE)}$	FMC_ALE valid before FMC_NOE low	-	$3T_{HCLK} - 0.5$	ns
$t_{h(NOE-ALE)}$	FMC_NWE high to FMC_ALE invalid	$3T_{HCLK} - 2$	-	ns

1. C_L = 30 pF.

Table 101. Switching characteristics for NAND Flash write cycles(1)

Symbol	Parameter	Min	Max	Unit
$t_{w(NWE)}$	FMC_NWE low width	$4T_{HCLK}$	$4T_{HCLK}+1$	ns
$t_{v(NWE-D)}$	FMC_NWE low to FMC_D[15-0] valid	0	-	ns
$t_{h(NWE-D)}$	FMC_NWE high to FMC_D[15-0] invalid	$3T_{HCLK} - 1$	-	ns
$t_{d(D-NWE)}$	FMC_D[15-0] valid before FMC_NWE high	$5T_{HCLK} - 3$	-	ns
$t_{d(ALE-NWE)}$	FMC_ALE valid before FMC_NWE low	-	$3T_{HCLK}-0.5$	ns
$t_{h(NWE-ALE)}$	FMC_NWE high to FMC_ALE invalid	$3T_{HCLK} - 1$	-	ns

1. C_L = 30 pF.

SDRAM waveforms and timings

Figure 73. SDRAM read access waveforms (CL = 1)

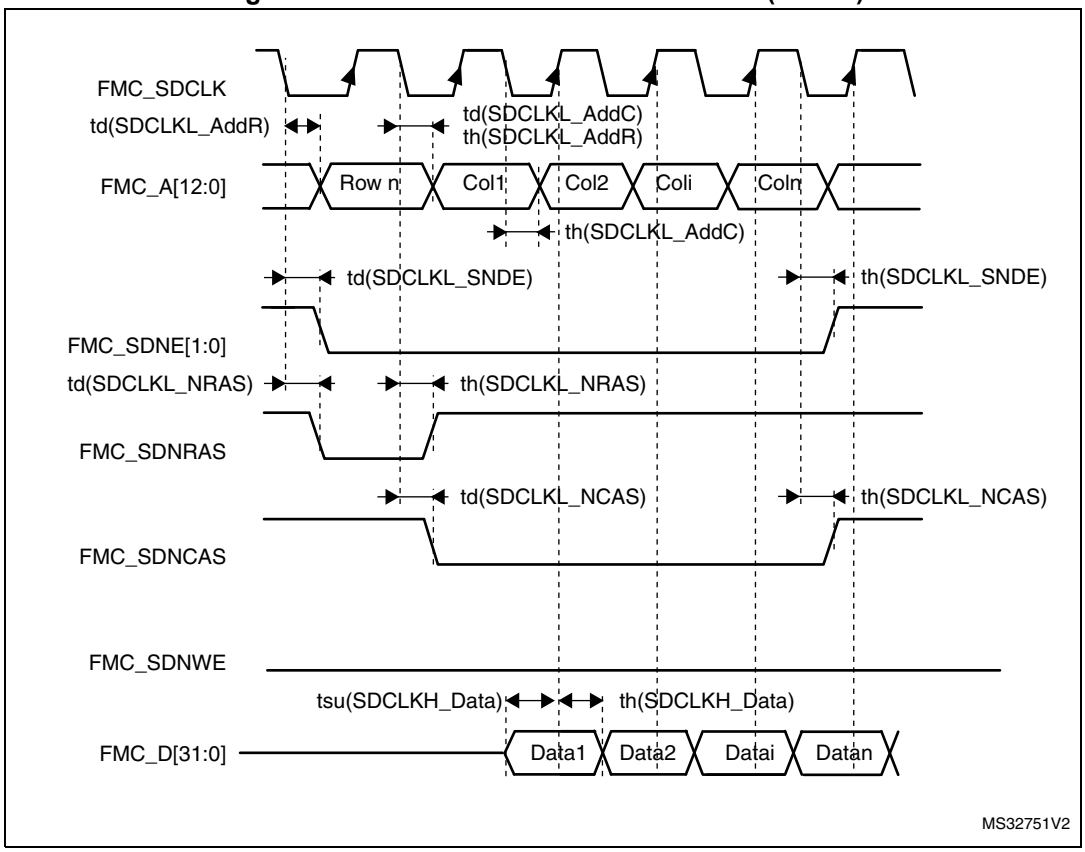

Table 102. SDRAM read timings(1)(2)

Symbol	Parameter	Min	Max	Unit
$t_{w(SDCLK)}$	FMC_SDCLK period	$2T_{HCLK} - 0.5$	$2T_{HCLK}+0.5$	ns
$t_{su(SDCLKH_Data)}$	Data input setup time	2	-	
$t_{h(SDCLKH_Data)}$	Data input hold time	0	-	
$t_{d(SDCLKL_Add)}$	Address valid time	-	1.5	
$t_{d(SDCLKL_SDNE)}$	Chip select valid time	-	0.5	
$t_{h(SDCLKL_SDNE)}$	Chip select hold time	0	-	
$t_{d(SDCLKL_SDNRAS)}$	SDNRAS valid time	-	0.5	
$t_{h(SDCLKL_SDNRAS)}$	SDNRAS hold time	0	-	
$t_{d(SDCLKL_SDNCAS)}$	SDNCAS valid time	-	0.5	
$t_{h(SDCLKL_SDNCAS)}$	SDNCAS hold time	0	-	

1. CL = 30 pF on data and address lines. CL=15pF on FMC_SDCLK.
2. Guaranteed by characterization results.

Table 103. LPSDR SDRAM read timings(1)(2)

Symbol	Parameter	Min	Max	Unit
$t_{W(SDCLK)}$	FMC_SDCLK period	$2T_{HCLK} - 0.5$	$2T_{HCLK}+0.5$	ns
$t_{su(SDCLKH_Data)}$	Data input setup time	2.5	-	
$t_{h(SDCLKH_Data)}$	Data input hold time	0	-	
$t_{d(SDCLKL_Add)}$	Address valid time	-	1	
$t_{d(SDCLKL_SDNE)}$	Chip select valid time	-	1	
$t_{h(SDCLKL_SDNE)}$	Chip select hold time	1	-	
$t_{d(SDCLKL_SDNRAS}$	SDNRAS valid time	-	1	
$t_{h(SDCLKL_SDNRAS)}$	SDNRAS hold time	1	-	
$t_{d(SDCLKL_SDNCAS)}$	SDNCAS valid time	-	1	
$t_{h(SDCLKL_SDNCAS)}$	SDNCAS hold time	1	-	

1. CL = 10 pF.
2. Guaranteed by characterization results.

Figure 74. SDRAM write access waveforms

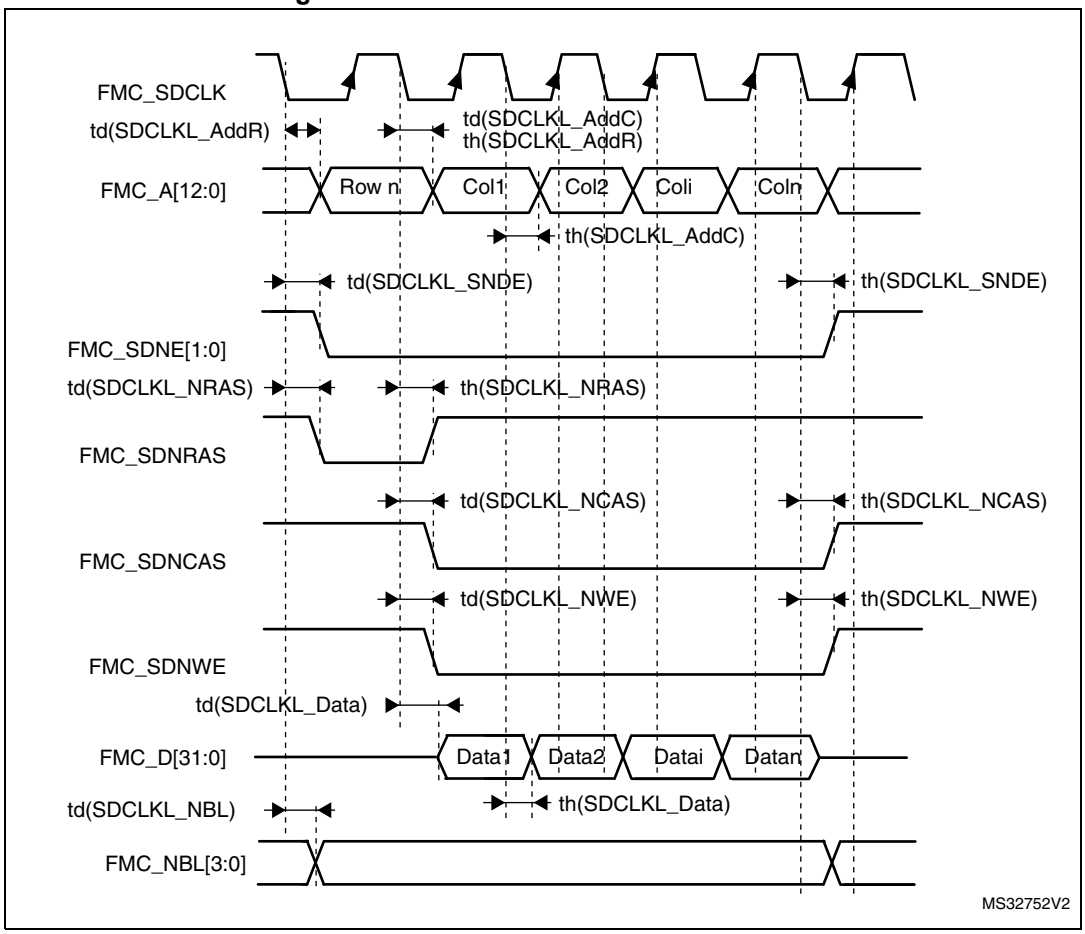

Table 104. SDRAM write timings(1)(2)

Symbol	Parameter	Min	Max	Unit
$t_{w(SDCLK)}$	FMC_SDCLK period	$2T_{HCLK} - 0.5$	$2T_{HCLK}+0.5$	ns
$t_{d(SDCLKL_Data)}$	Data output valid time	-	3.5	
$t_{h(SDCLKL_Data)}$	Data output hold time	0	-	
$t_{d(SDCLKL_Add)}$	Address valid time	-	1.5	
$t_{d(SDCLKL_SDNWE)}$	SDNWE valid time	-	1	
$t_{h(SDCLKL_SDNWE)}$	SDNWE hold time	0	-	
$t_{d(SDCLKL_SDNE)}$	Chip select valid time	-	0.5	
$t_{h(SDCLKL_SDNE)}$	Chip select hold time	0	-	
$t_{d(SDCLKL_SDNRAS)}$	SDNRAS valid time	-	2	
$t_{h(SDCLKL_SDNRAS)}$	SDNRAS hold time	0	-	
$t_{d(SDCLKL_SDNCAS)}$	SDNCAS valid time	-	0.5	
$t_{d(SDCLKL_SDNCAS)}$	SDNCAS hold time	0	-	
$t_{d(SDCLKL_NBL)}$	NBL valid time	-	0.5	
$t_{h(SDCLKL_NBL)}$	NBLoutput time	0	-	

1. CL = 30 pF on data and address lines. CL=15pF on FMC_SDCLK.
2. Guaranteed by characterization results.

Table 105. LPSDR SDRAM write timings(1)(2)

Symbol	Parameter	Min	Max	Unit
$t_{w(SDCLK)}$	FMC_SDCLK period	$2T_{HCLK} - 0.5$	$2T_{HCLK}+0.5$	ns
$t_{d(SDCLKL_Data)}$	Data output valid time	-	5	
$t_{h(SDCLKL_Data)}$	Data output hold time	2	-	
$t_{d(SDCLKL_Add)}$	Address valid time	-	2.8	
$t_{d(SDCLKL-SDNWE)}$	SDNWE valid time	-	2	
$t_{h(SDCLKL-SDNWE)}$	SDNWE hold time	1	-	
$t_{d(SDCLKL-SDNE)}$	Chip select valid time	-	1.5	
$t_{h(SDCLKL-SDNE)}$	Chip select hold time	1	-	
$t_{d(SDCLKL-SDNRAS)}$	SDNRAS valid time	-	1.5	
$t_{h(SDCLKL-SDNRAS)}$	SDNRAS hold time	1.5	-	
$t_{d(SDCLKL-SDNCAS)}$	SDNCAS valid time	-	1.5	
$t_{d(SDCLKL-SDNCAS)}$	SDNCAS hold time	1.5	-	
$t_{d(SDCLKL_NBL)}$	NBL valid time	-	1.5	
$t_{h(SDCLKL-NBL)}$	NBL output time	1.5	-	

1. CL = 10 pF.
2. Guaranteed by characterization results.

6.3.27 Camera interface (DCMI) timing specifications

Unless otherwise specified, the parameters given in *Table 106* for DCMI are derived from tests performed under the ambient temperature, f_{HCLK} frequency and V_{DD} supply voltage summarized in *Table 17*, with the following configuration:

- DCMI_PIXCLK polarity: falling
- DCMI_VSYNC and DCMI_HSYNC polarity: high
- Data formats: 14 bits

Table 106. DCMI characteristics

Symbol	Parameter	Min	Max	Unit
	Frequency ratio DCMI_PIXCLK/f_{HCLK}	-	0.4	
DCMI_PIXCLK	Pixel clock input	-	54	MHz
D_{Pixel}	Pixel clock input duty cycle	30	70	%
$t_{su(DATA)}$	Data input setup time	2	-	ns
$t_{h(DATA)}$	Data input hold time	2.5	-	
$t_{su(HSYNC)}$ $t_{su(VSYNC)}$	DCMI_HSYNC/DCMI_VSYNC input setup time	0.5	-	
$t_{h(HSYNC)}$ $t_{h(VSYNC)}$	DCMI_HSYNC/DCMI_VSYNC input hold time	1	-	

Figure 75. DCMI timing diagram

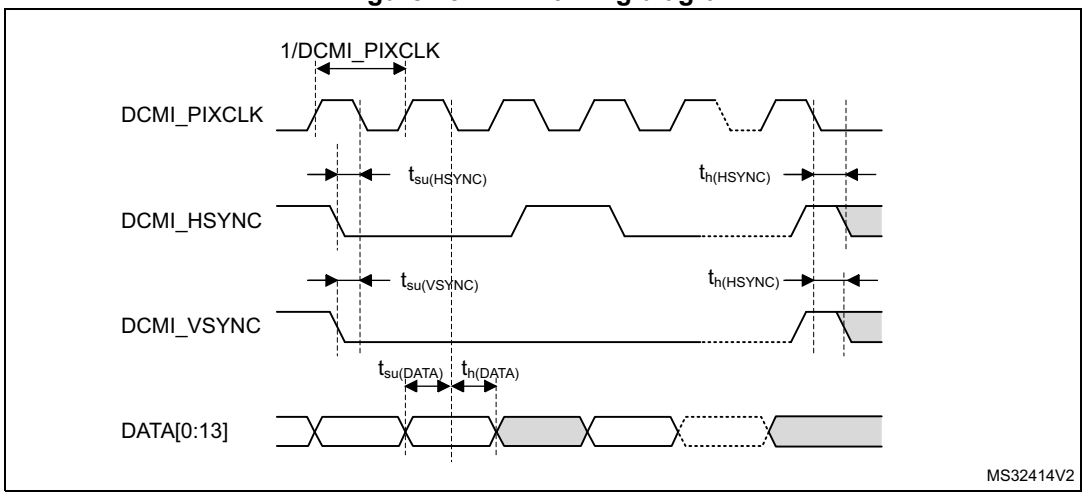

6.3.28 LCD-TFT controller (LTDC) characteristics

Unless otherwise specified, the parameters given in *Table 107* for LCD-TFT are derived from tests performed under the ambient temperature, f_{HCLK} frequency and VDD supply voltage summarized in *Table 17*, with the following configuration:

- LCD_CLK polarity: high
- LCD_DE polarity : low
- LCD_VSYNC and LCD_HSYNC polarity: high
- Pixel formats: 24 bits

Table 107. LTDC characteristics

Symbol	Parameter	Min	Max	Unit
f_{CLK}	LTDC clock output frequency	-	83	MHz
D_{CLK}	LTDC clock output duty cycle	45	55	%
$t_{w(CLKH)}$ $t_{w(CLKL)}$	Clock High time, low time	tw(CLK)/2 − 0.5	tw(CLK)/2+0.5	ns
$t_{v(DATA)}$	Data output valid time	-	3.5	
$t_{h(DATA)}$	Data output hold time	1.5	-	
$t_{v(HSYNC)}$	HSYNC/VSYNC/DE output valid time	-	2.5	
$t_{v(VSYNC)}$				
$t_{v(DE)}$				
$t_{h(HSYNC)}$	HSYNC/VSYNC/DE output hold time	2	-	
$t_{h(VSYNC)}$				
th(DE)				

Figure 76. LCD-TFT horizontal timing diagram

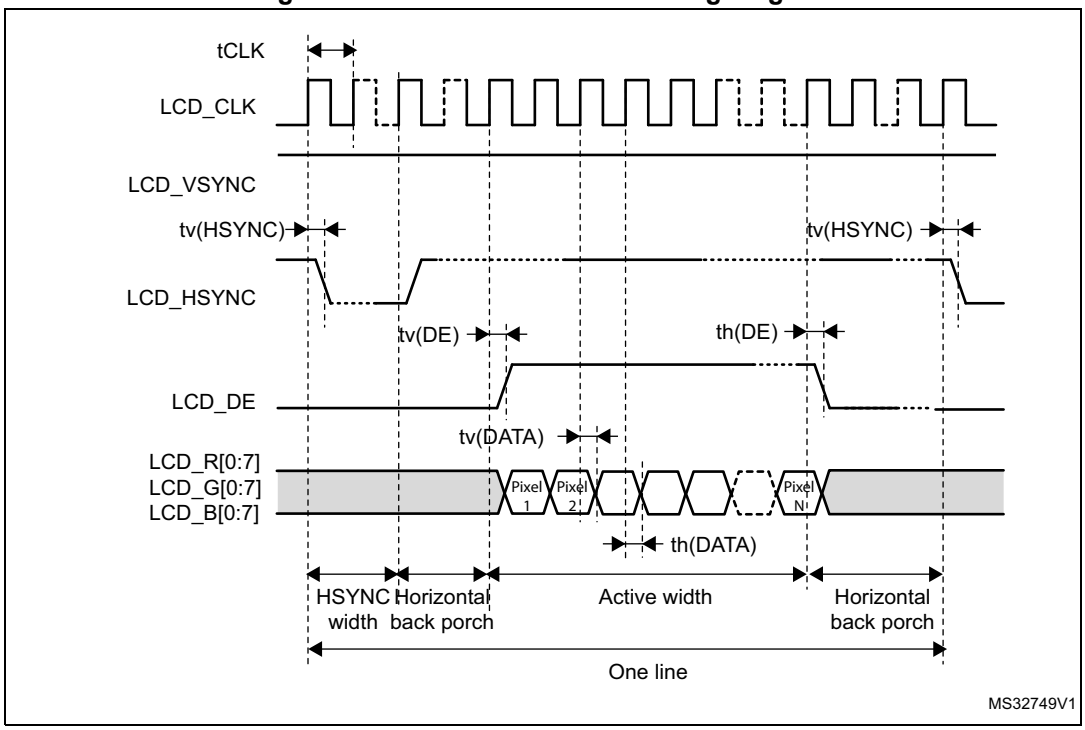

Figure 77. LCD-TFT vertical timing diagram

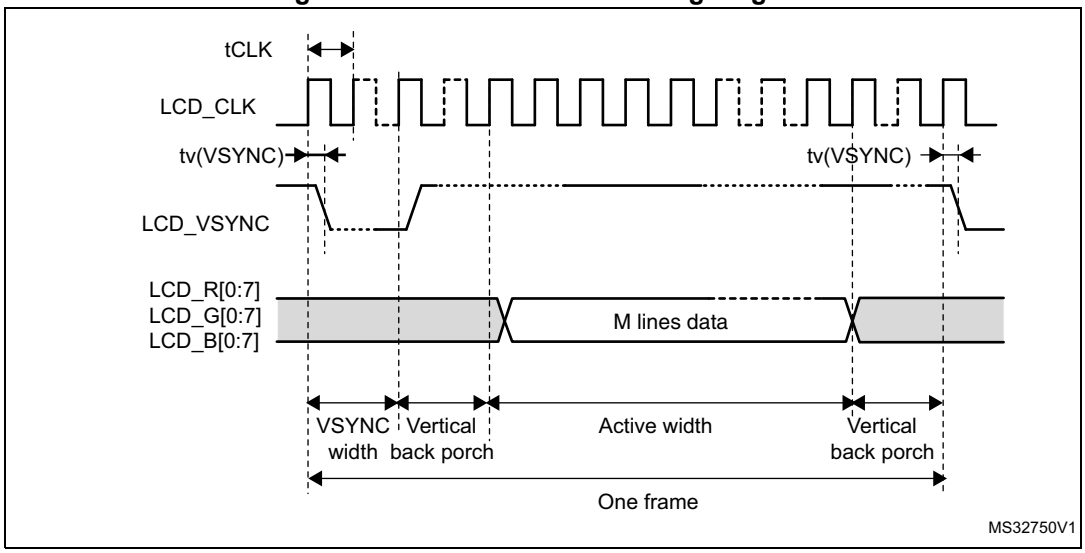

6.3.29 SD/SDIO MMC card host interface (SDIO) characteristics

Unless otherwise specified, the parameters given in *Table 108* for the SDIO/MMC interface are derived from tests performed under the ambient temperature, f_{PCLK2} frequency and V_{DD} supply voltage conditions summarized in *Table 17*, with the following configuration:

- Output speed is set to OSPEEDRy[1:0] = 10
- Capacitive load C = 30 pF
- Measurement points are done at CMOS levels: $0.5V_{DD}$

Refer to *Section 6.3.17: I/O port characteristics* for more details on the input/output characteristics.

Figure 78. SDIO high-speed mode

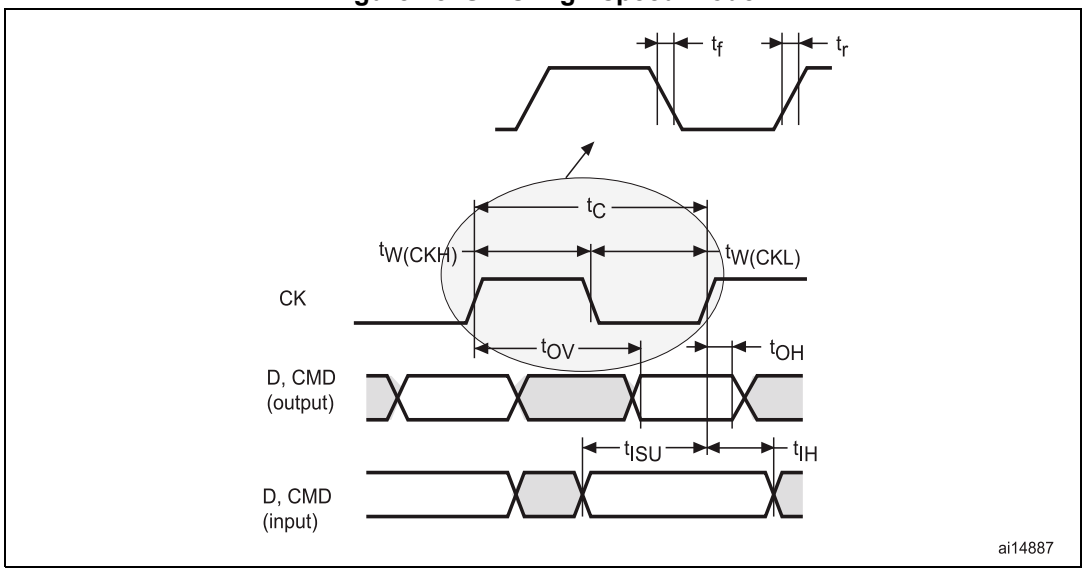

Figure 79. SD default mode

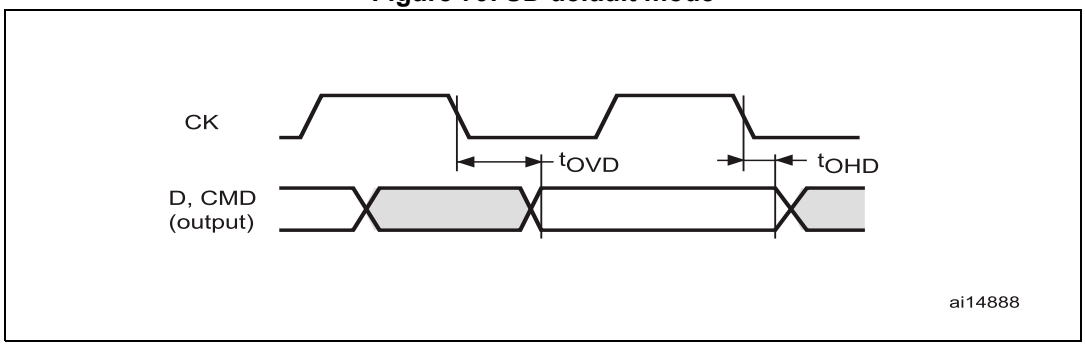

Table 108. Dynamic characteristics: SD / MMC characteristics(1)(2)

Symbol	Parameter	Conditions	Min	Typ	Max	Unit
f_{PP}	Clock frequency in data transfer mode		0		48	MHz
-	SDIO_CK/fPCLK2 frequency ratio		-	-	8/3	-
$t_{W(CKL)}$	Clock low time	fpp =48 MHz	8.5	9	-	ns
$t_{W(CKH)}$	Clock high time	fpp =48 MHz	8.3	10	-	
CMD, D inputs (referenced to CK) in MMC and SD HS mode						
t_{ISU}	Input setup time HS	fpp =48 MHz	3.5	-	-	ns
t_{IH}	Input hold time HS	fpp =48 MHz	0	-	-	
CMD, D outputs (referenced to CK) in MMC and SD HS mode						
t_{OV}	Output valid time HS	fpp =48 MHz	-	4.5	7	ns
t_{OH}	Output hold time HS	fpp =48 MHz	3	-	-	
CMD, D inputs (referenced to CK) in SD default mode						
tISUD	Input setup time SD	fpp =24 MHz	1.5	-	-	ns
tIHD	Input hold time SD	fpp =24 MHz	0.5	-	-	
CMD, D outputs (referenced to CK) in SD default mode						
tOVD	Output valid default time SD	fpp =24 MHz	-	4.5	6.5	ns
tOHD	Output hold default time SD	fpp =24 MHz	3.5	-	-	

1. Guaranteed by characterization results.
2. V_{DD} = 2.7 to 3.6 V.

6.3.30 RTC characteristics

Table 109. RTC characteristics

Symbol	Parameter	Conditions	Min	Max
-	f_{PCLK1}/RTCCLK frequency ratio	Any read/write operation from/to an RTC register	4	-

7 Package information

In order to meet environmental requirements, ST offers these devices in different grades of ECOPACK® packages, depending on their level of environmental compliance. ECOPACK® specifications, grade definitions and product status are available at: *www.st.com*. ECOPACK® is an ST trademark.

7.1 LQFP100 package information

Figure 80. LQFP100 -100-pin, 14 x 14 mm low-profile quad flat package outline

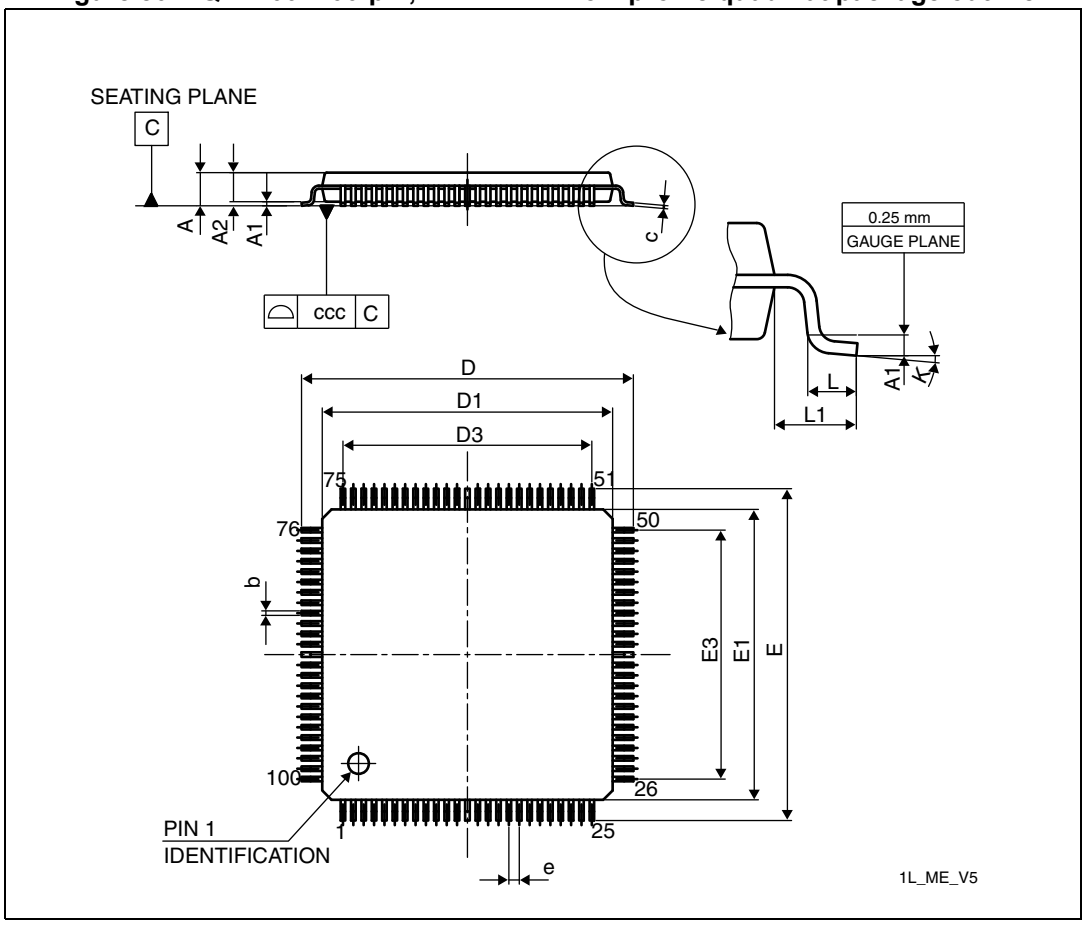

1. Drawing is not to scale.

Table 110. LQPF100 100-pin, 14 x 14 mm low-profile quad flat package mechanical data

Symbol	millimeters			inches[1]		
	Min	Typ	Max	Min	Typ	Max
A	-	-	1.600	-	-	0.0630
A1	0.050	-	0.150	0.0020	-	0.0059
A2	1.350	1.400	1.450	0.0531	0.0551	0.0571
b	0.170	0.220	0.270	0.0067	0.0087	0.0106
c	0.090	-	0.200	0.0035	-	0.0079
D	15.800	16.000	16.200	0.6220	0.6299	0.6378
D1	13.800	14.000	14.200	0.5433	0.5512	0.5591
D3	-	12.000	-	-	0.4724	-
E	15.800	16.000	16.200	0.6220	0.6299	0.6378
E1	13.800	14.000	14.200	0.5433	0.5512	0.5591
E3	-	12.000	-	-	0.4724	-
e	-	0.500	-	-	0.0197	-
L	0.450	0.600	0.750	0.0177	0.0236	0.0295
L1	-	1.000	-	-	0.0394	-
k	0.0°	3.5°	7.0°	0.0°	3.5°	7.0°
ccc	-	-	0.080	-	-	0.0031

1. Values in inches are converted from mm and rounded to 4 decimal digits.

Figure 81. LQPF100 - 100-pin, 14 x 14 mm low-profile quad flat recommended footprint

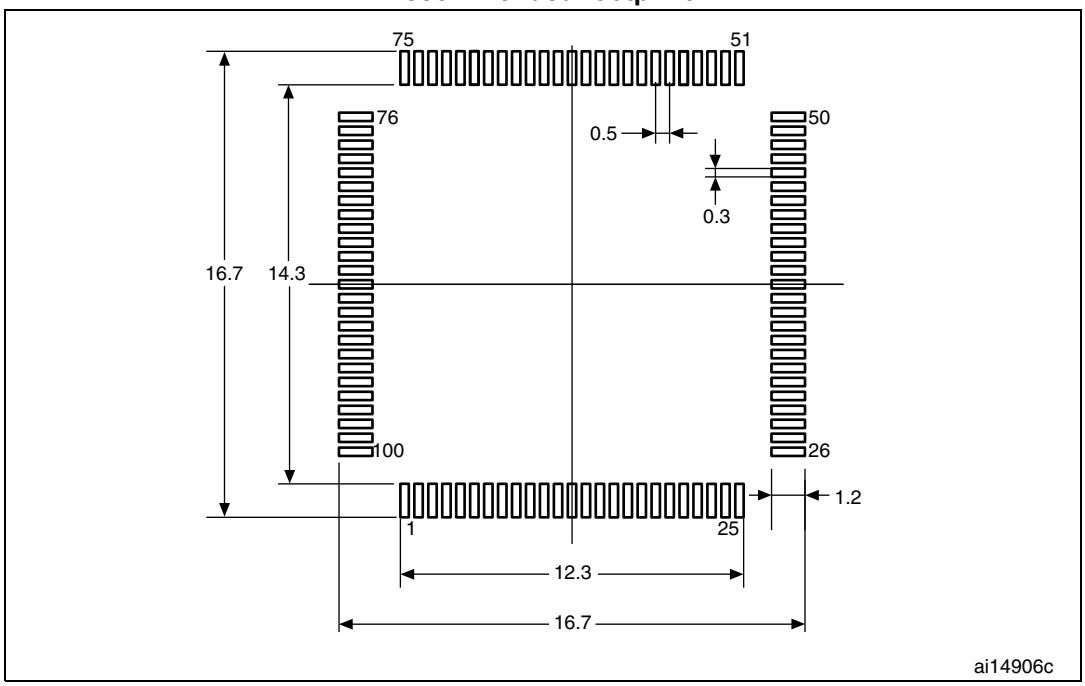

1. Dimensions are expressed in millimeters.

Device marking for LQFP100

The following figure gives an example of topside marking orientation versus pin 1 identifier location.

Other optional marking or inset/upset marks, which depend on assembly location, are not indicated below.

Figure 82. LQFP100 marking example (package top view)

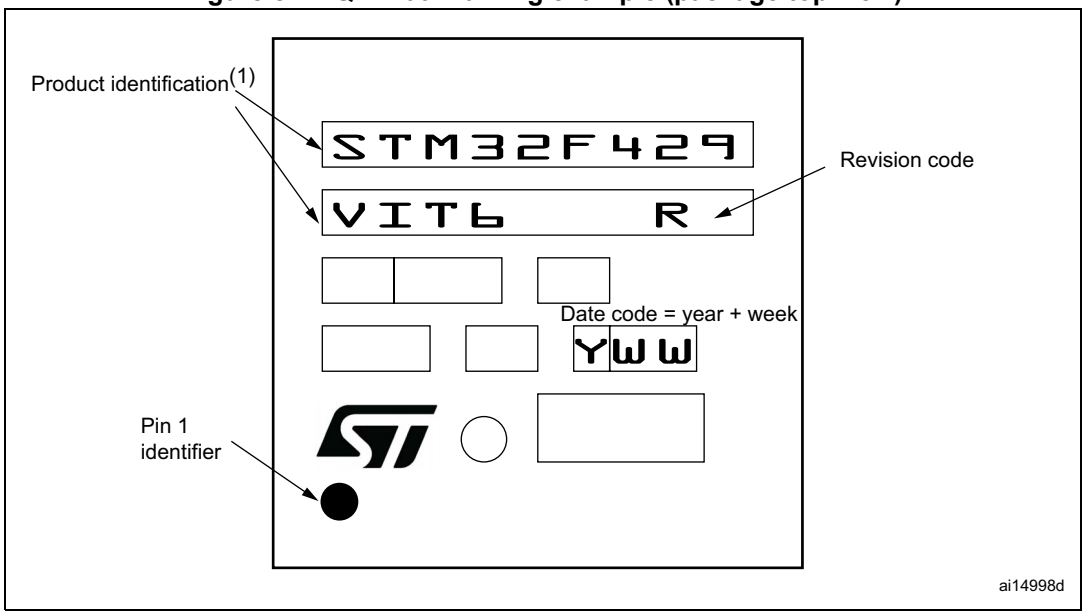

1. Parts marked as “ES”, “E” or accompanied by an Engineering Sample notification letter, are not yet qualified and therefore not yet ready to be used in production and any consequences deriving from such usage will not be at ST charge. In no event, ST will be liable for any customer usage of these engineering samples in production. ST Quality has to be contacted prior to any decision to use these Engineering Samples to run qualification activity.

7.2 WLCSP143 package information

Figure 83. WLCSP143 - 143-ball, 4.521x 5.547 mm, 0.4 mm pitch wafer level chip scale package outline

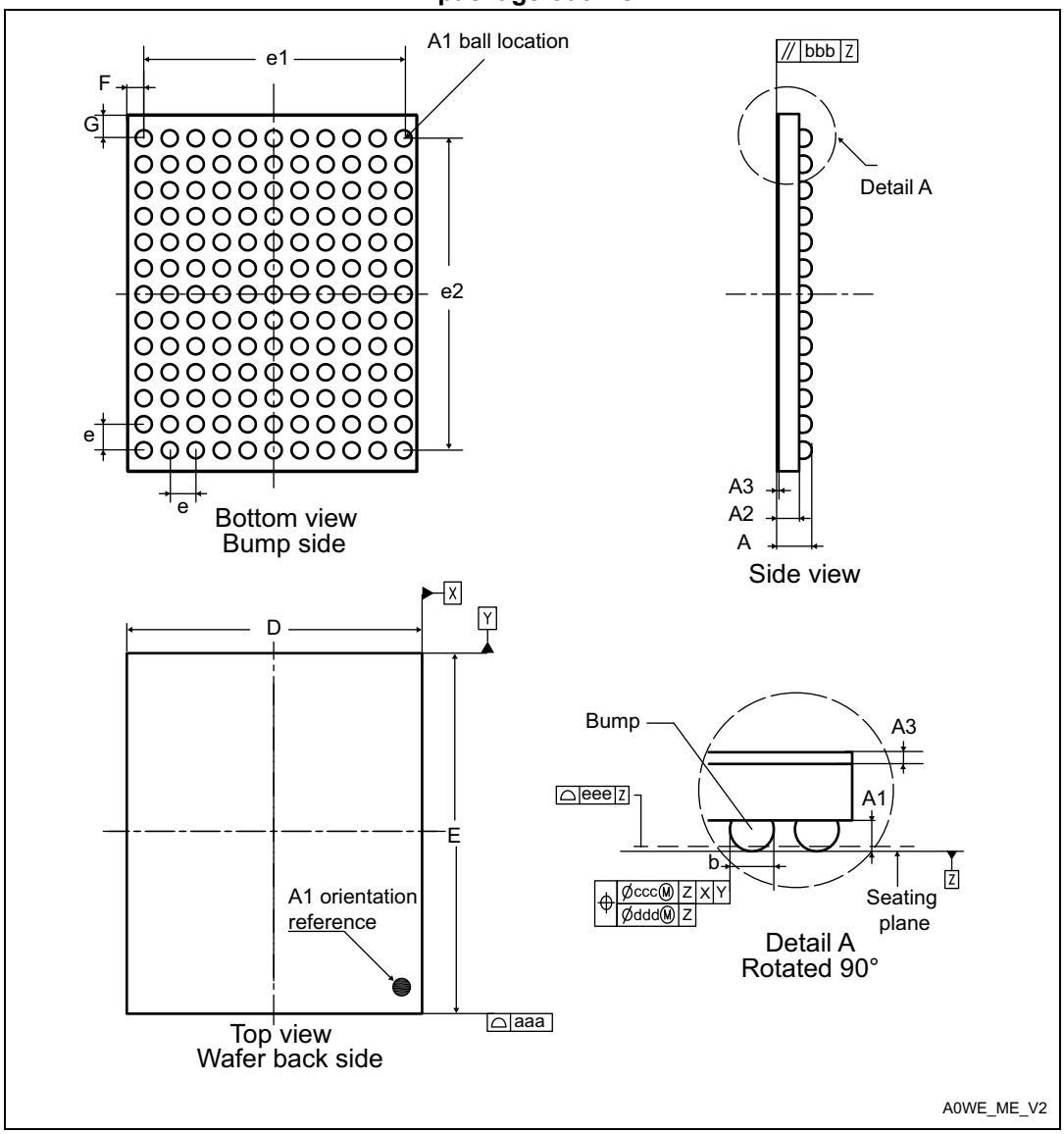

1. Drawing is not to scale.

Table 111. WLCSP143 - 143-ball, 4.521x 5.547 mm, 0.4 mm pitch wafer level chip scale package mechanical data

Symbol	millimeters			inches[1]		
	Min	Typ	Max	Min	Typ	Max
A	0.525	0.555	0.585	0.0207	0.0219	0.0230
A1	0.155	0.175	0.195	-	0.0069	-
A2	-	0.380	-	-	0.0150	-
A3[2]	-	0.025	-	-	0.0010	-
b[3]	0.220	0.250	0.280	0.0087	0.0098	0.0110
D	4.486	4.521	4.556	0.1766	0.1780	0.1794
E	5.512	5.547	5.582	0.2170	0.2184	0.2198
e	-	0.400	-	-	0.0157	-
e1	-	4.000	-	-	0.1575	-
e2	-	4.800	-	-	0.1890	-
F	-	0.2605	-	-	0.0103	-
G	-	0.3735	-	-	0.0147	-
aaa	-	-	0.100	-	-	0.0039
bbb	-	-	0.100	-	-	0.0039
ccc	-	-	0.100	-	-	0.0039
ddd	-	-	0.050	-	-	0.0020
eee	-	-	0.050	-	-	0.0020

1. Values in inches are converted from mm and rounded to 4 decimal digits.
2. Back side coating.
3. Dimension is measured at the maximum bump diameter parallel to primary datum Z.

Figure 84. WLCSP143 - 143-ball, 4.521x 5.547 mm, 0.4 mm pitch wafer level chip scale recommended footprint

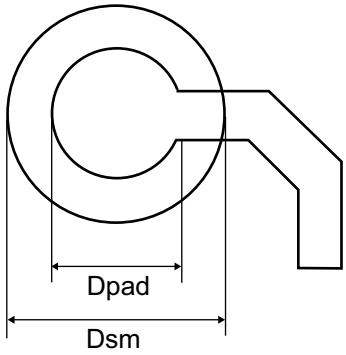

Table 112. WLCSP143 recommended PCB design rules (0.4 mm pitch)

Dimension	Recommended values
Pitch	0.4
Dpad	260 µm max. (circular)
	220 µm recommended
Dsm	300 µm min. (for 260 µm diameter pad)
PCB pad design	Non-solder mask defined via underbump allowed.

Device marking for WLCSP143

The following figure gives an example of topside marking orientation versus ball A 1 identifier location.

Other optional marking or inset/upset marks, which depend on assembly location, are not indicated below.

Figure 85. WLCSP143 marking example (package top view)

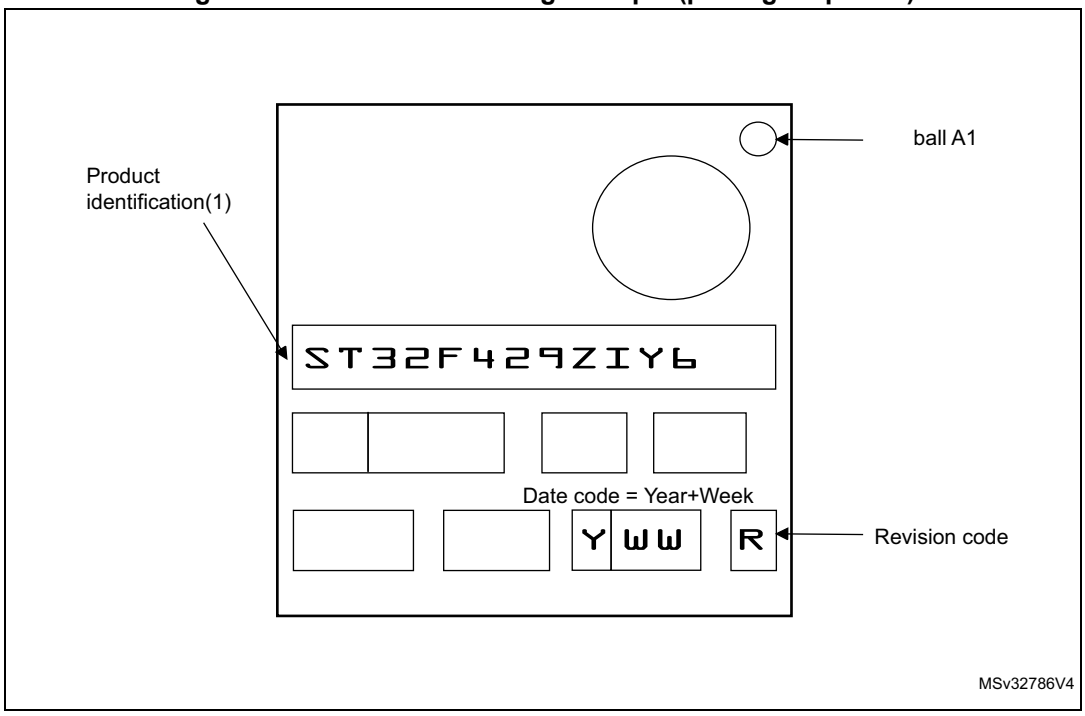

1. Parts marked as “ES”, “E” or accompanied by an Engineering Sample notification letter, are not yet qualified and therefore not yet ready to be used in production and any consequences deriving from such usage will not be at ST charge. In no event, ST will be liable for any customer usage of these engineering samples in production. ST Quality has to be contacted prior to any decision to use these Engineering Samples to run qualification activity.

7.3 LQFP144 package information

Figure 86. LQFP144-144-pin, 20 x 20 mm low-profile quad flat package outline

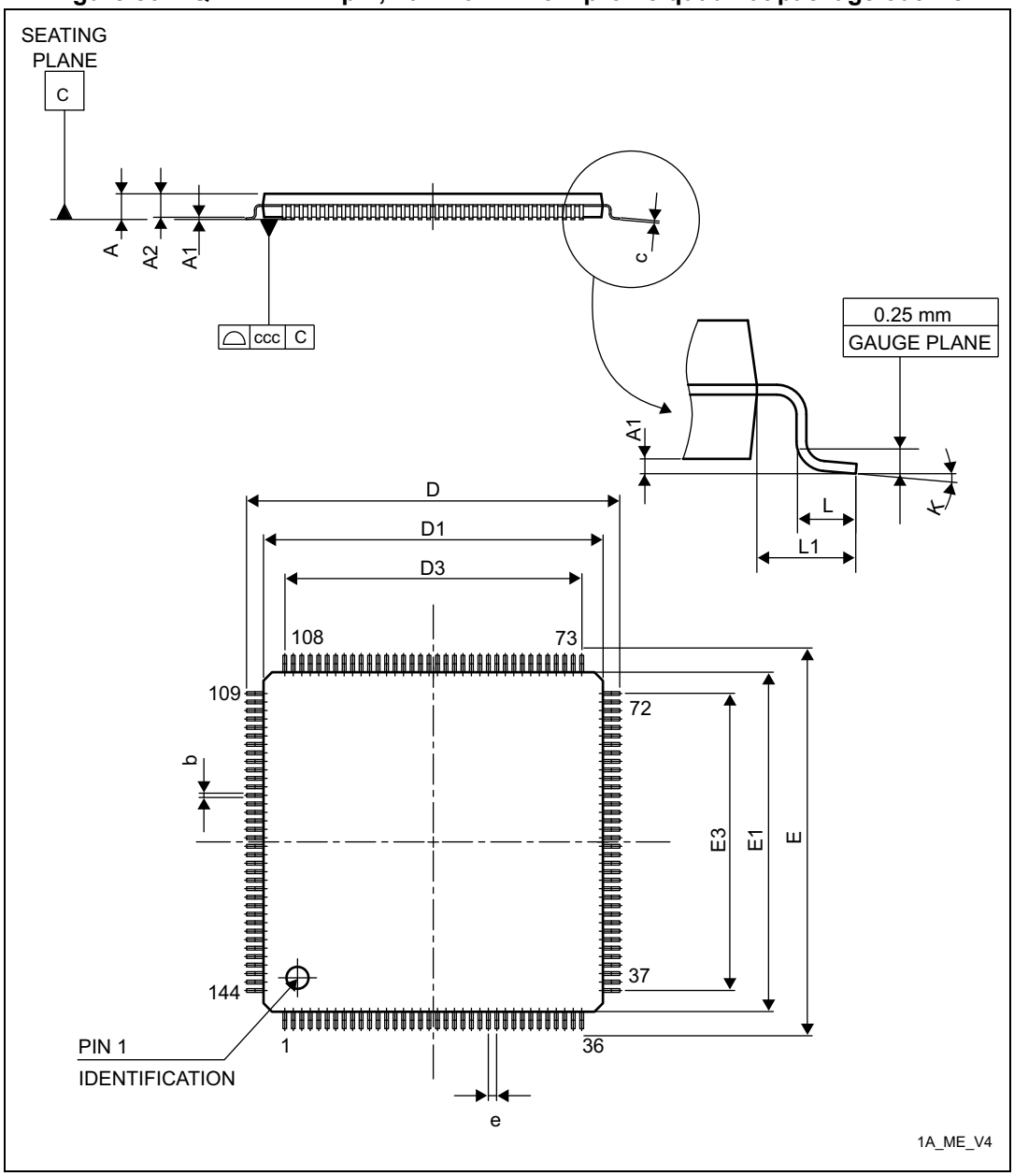

1. Drawing is not to scale.

Table 113. LQFP144 - 144-pin, 20 x 20 mm low-profile quad flat package mechanical data

Symbol	millimeters			inches[1]		
	Min	Typ	Max	Min	Typ	Max
A	-	-	1.600	-	-	0.0630
A1	0.050	-	0.150	0.0020	-	0.0059
A2	1.350	1.400	1.450	0.0531	0.0551	0.0571
b	0.170	0.220	0.270	0.0067	0.0087	0.0106
c	0.090	-	0.200	0.0035	-	0.0079
D	21.800	22.000	22.200	0.8583	0.8661	0.874
D1	19.800	20.000	20.200	0.7795	0.7874	0.7953
D3	-	17.500	-	-	0.689	-
E	21.800	22.000	22.200	0.8583	0.8661	0.8740
E1	19.800	20.000	20.200	0.7795	0.7874	0.7953
E3	-	17.500	-	-	0.6890	-
e	-	0.500	-	-	0.0197	-
L	0.450	0.600	0.750	0.0177	0.0236	0.0295
L1	-	1.000	-	-	0.0394	-
k	0°	3.5°	7°	0°	3.5°	7°
ccc	-	-	0.080	-	-	0.0031

1. Values in inches are converted from mm and rounded to 4 decimal digits.

Figure 87. LQPF144- 144-pin,20 x 20 mm low-profile quad flat package recommended footprint

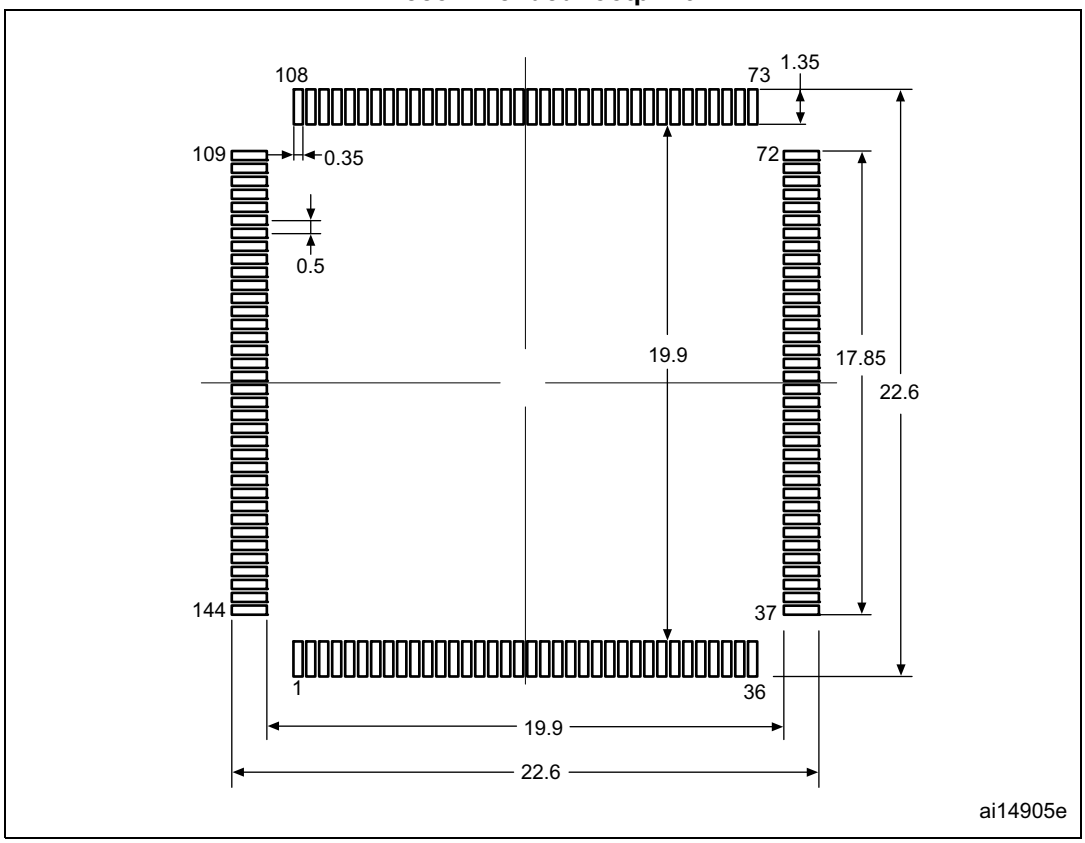

1. Dimensions are expressed in millimeters.

Device marking for LQFP144

The following figure gives an example of topside marking orientation versus pin 1 identifier location.

Other optional marking or inset/upset marks, which depend on assembly location, are not indicated below.

Figure 88. LQFP144 marking example (package top view)

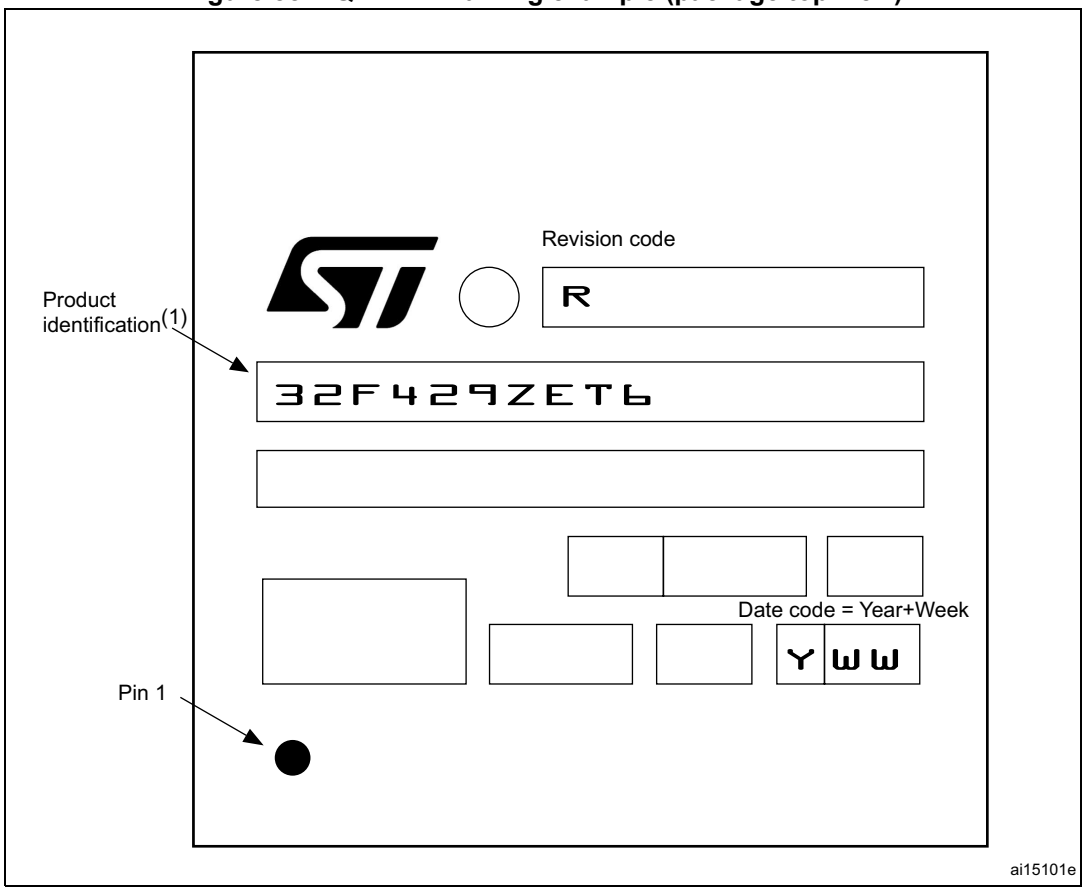

1. Parts marked as “ES”, “E” or accompanied by an Engineering Sample notification letter, are not yet qualified and therefore not yet ready to be used in production and any consequences deriving from such usage will not be at ST charge. In no event, ST will be liable for any customer usage of these engineering samples in production. ST Quality has to be contacted prior to any decision to use these Engineering Samples to run qualification activity.

7.4 LQFP176 package information

Figure 89. LQFP176 - 176-pin, 24 x 24 mm low-profile quad flat package outline

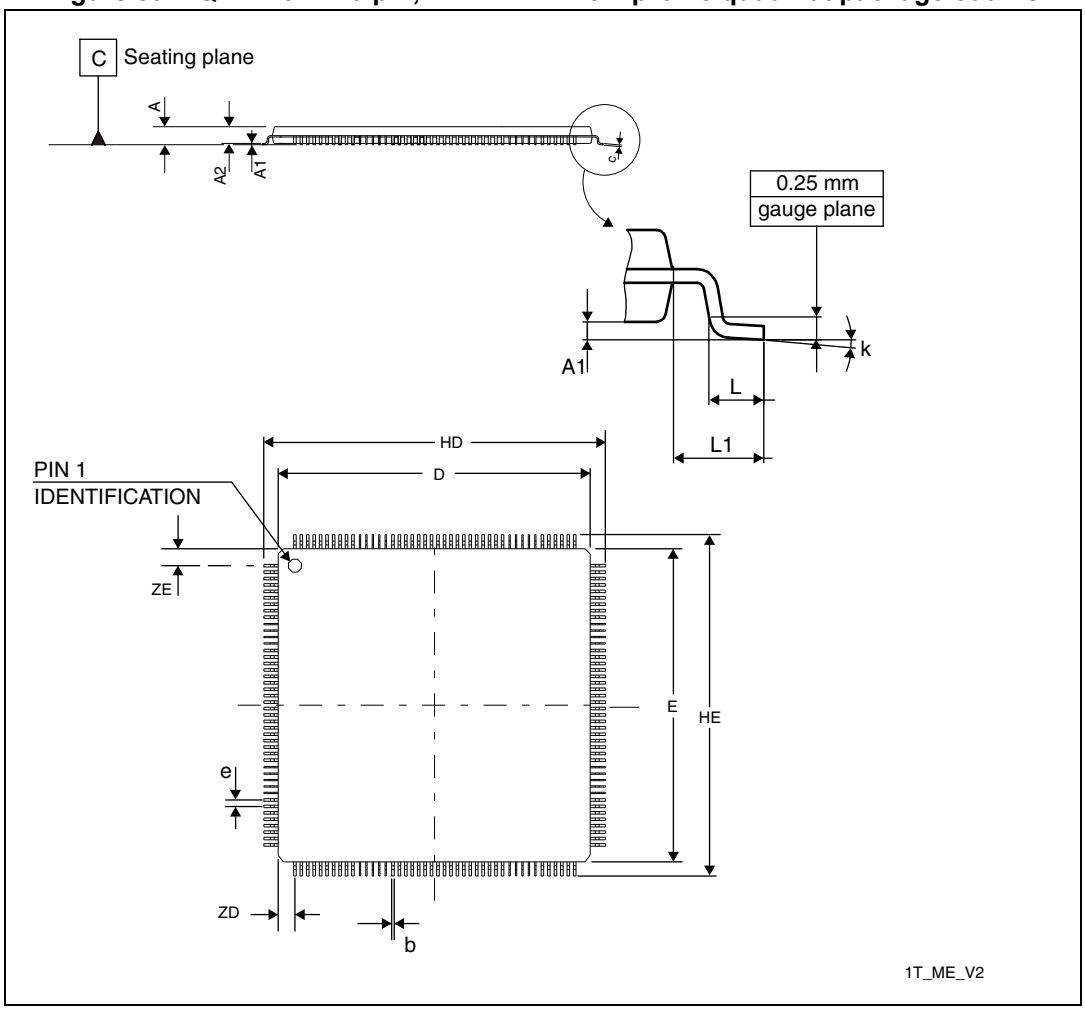

1. Drawing is not to scale.

Table 114. LQFP176 - 176-pin, 24 x 24 mm low-profile quad flat package mechanical data

Symbol	millimeters			inches(1)		
	Min	Typ	Max	Min	Typ	Max
A	-	-	1.600	-	-	0.0630
A1	0.050	-	0.150	0.0020	-	0.0059
A2	1.350	-	1.450	0.0531	-	0.0571
b	0.170	-	0.270	0.0067	-	0.0106
c	0.090	-	0.200	0.0035	-	0.0079
D	23.900	-	24.100	0.9409	-	0.9488
HD	25.900	-	26.100	1.0197	-	1.0276

Table 114. LQFP176 - 176-pin, 24 x 24 mm low-profile quad flat package mechanical data (continued)

Symbol	millimeters			inches[1]		
	Min	Typ	Max	Min	Typ	Max
ZD	-	1.250	-	-	0.0492	-
E	23.900	-	24.100	0.9409	-	0.9488
HE	25.900	-	26.100	1.0197	-	1.0276
ZE	-	1.250	-	-	0.0492	-
e	-	0.500	-	-	0.0197	-
L[2]	0.450	-	0.750	0.0177	-	0.0295
L1	-	1.000	-	-	0.0394	-
k	0°	-	7°	0°	-	7°
ccc	-	-	0.080	-	-	0.0031

1. Values in inches are converted from mm and rounded to 4 decimal digits.
2. L dimension is measured at gauge plane at 0.25 mm above the seating plane.

Figure 90. LQFP176 - 176-pin, 24 x 24 mm low profile quad flat recommended footprint

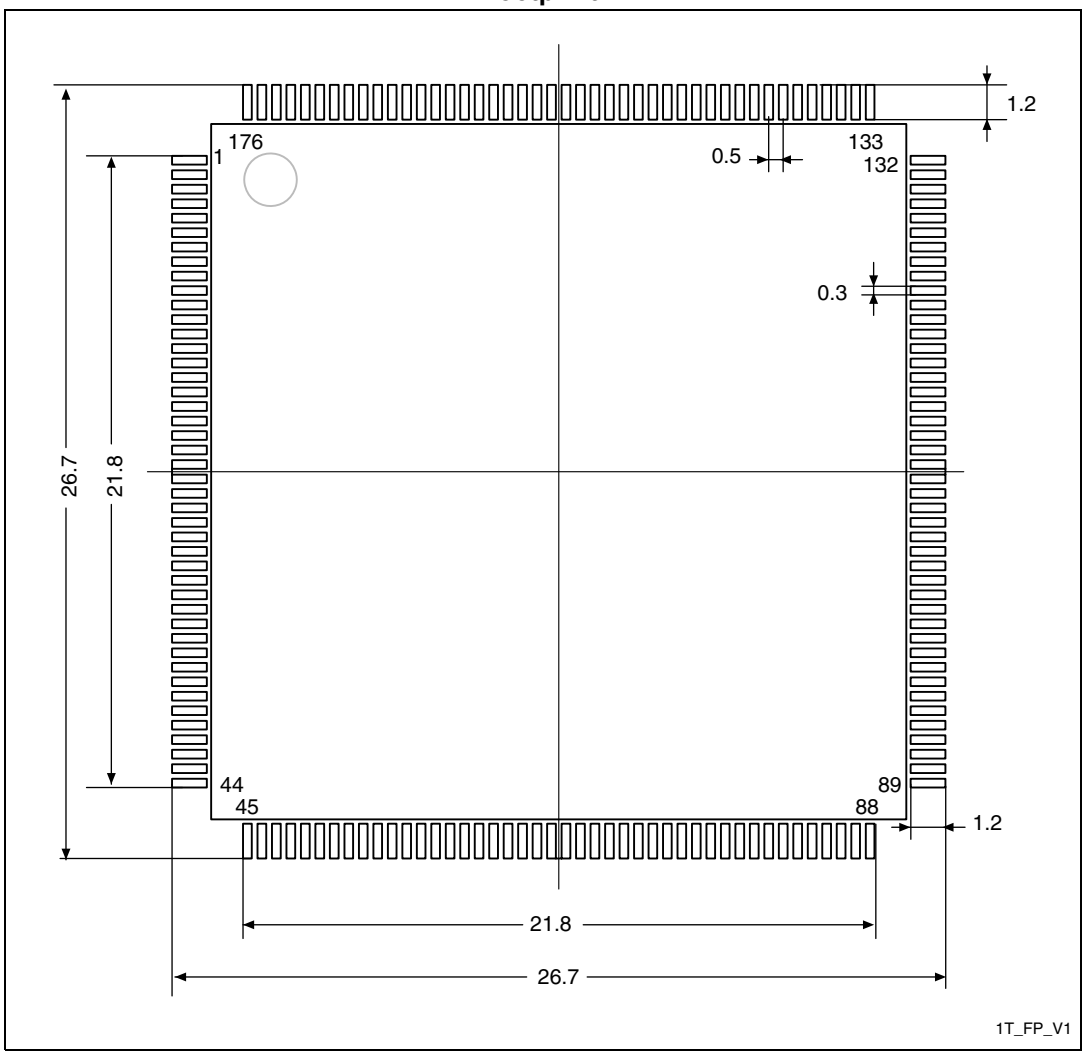

1. Dimensions are expressed in millimeters.

Device marking for LQFP176

The following figure gives an example of topside marking orientation versus pin 1 identifier location.

Other optional marking or inset/upset marks, which depend on assembly location, are not indicated below.

Figure 91. LQFP176 marking (package top view)

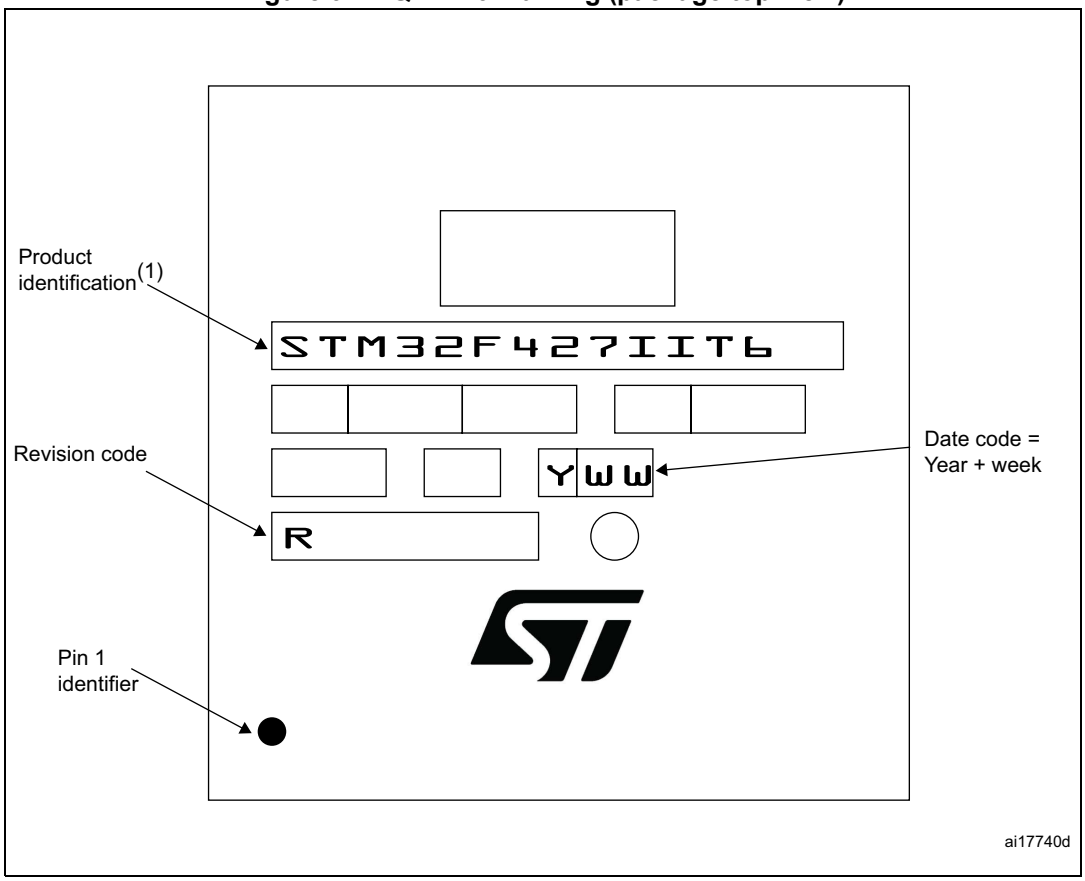

1. Parts marked as “ES”, “E” or accompanied by an Engineering Sample notification letter, are not yet qualified and therefore not yet ready to be used in production and any consequences deriving from such usage will not be at ST charge. In no event, ST will be liable for any customer usage of these engineering samples in production. ST Quality has to be contacted prior to any decision to use these Engineering Samples to run qualification activity.

7.5 LQFP208 package information

Figure 92. LQFP208 - 208-pin, 28 x 28 mm low-profile quad flat package outline

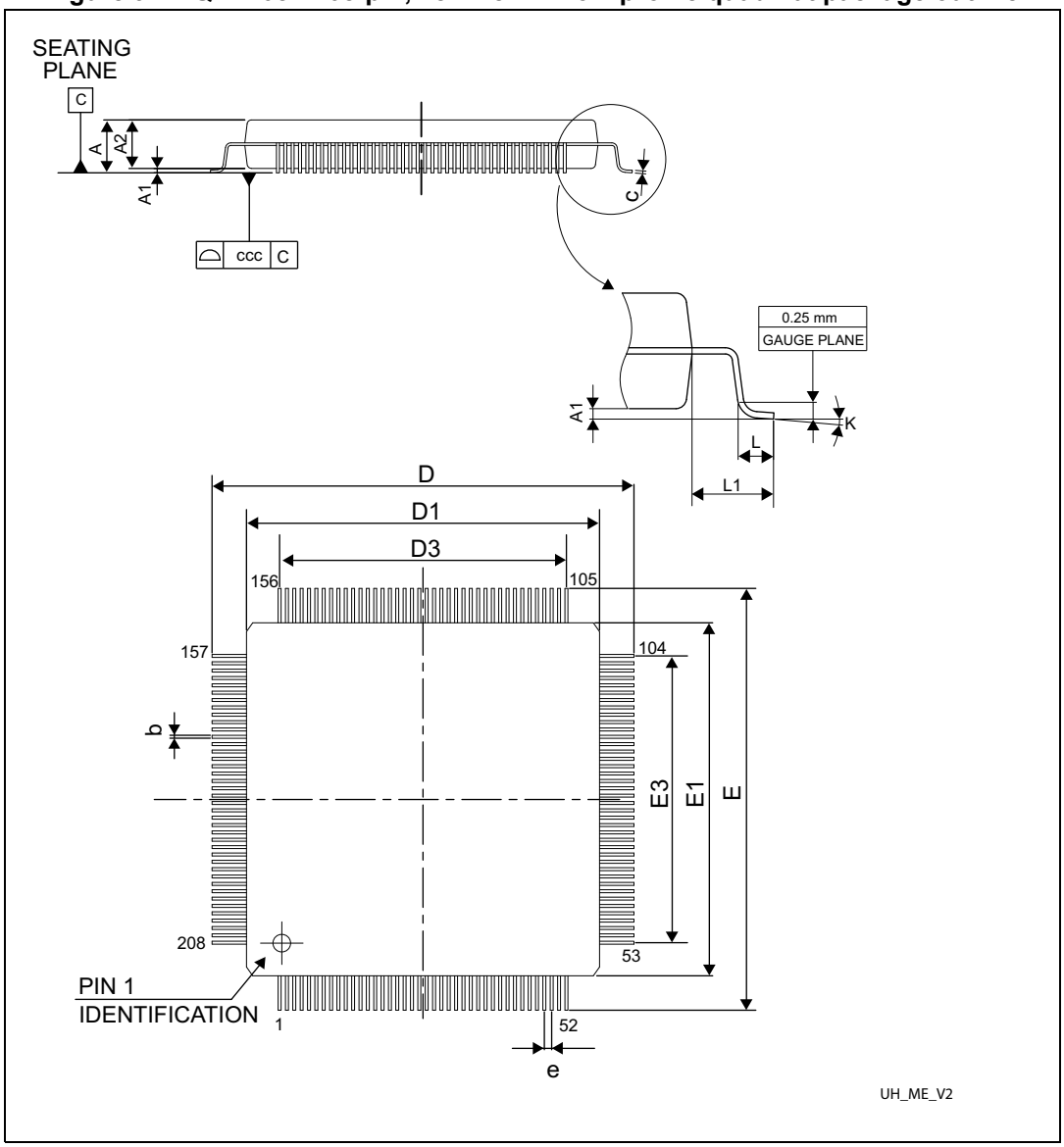

1. Drawing is not to scale.

Table 115. LQFP208 - 208-pin, 28 x 28 mm low-profile quad flat package mechanical data

Symbol	millimeters			inches[1]		
	Min	Typ	Max	Min	Typ	Max
A	-	-	1.600	--	-	0.0630
A1	0.050	-	0.150	0.0020	-	0.0059
A2	1.350	1.400	1.450	0.0531	0.0551	0.0571
b	0.170	0.220	0.270	0.0067	0.0087	0.0106
c	0.090	-	0.200	0.0035	-	0.0079
D	29.800	30.000	30.200	1.1732	1.1811	1.1890
D1	27.800	28.000	28.200	1.0945	1.1024	1.1102
D3	-	25.500	-	-	1.0039	-
E	29.800	30.000	30.200	1.1732	1.1811	1.1890
E1	27.800	28.000	28.200	1.0945	1.1024	1.1102
E3	-	25.500	-	-	1.0039	-
e	-	0.500	-	-	0.0197	-
L	0.450	0.600	0.750	0.0177	0.0236	0.0295
L1	-	1.000	-	-	0.0394	-
k	0°	3.5°	7.0°	0°	3.5°	7.0°
ccc	-	-	0.080	-	-	0.0031

1. Values in inches are converted from mm and rounded to 4 decimal digits.

Figure 93. LQFP208 - 208-pin, 28 x 28 mm low-profile quad flat package recommended footprint

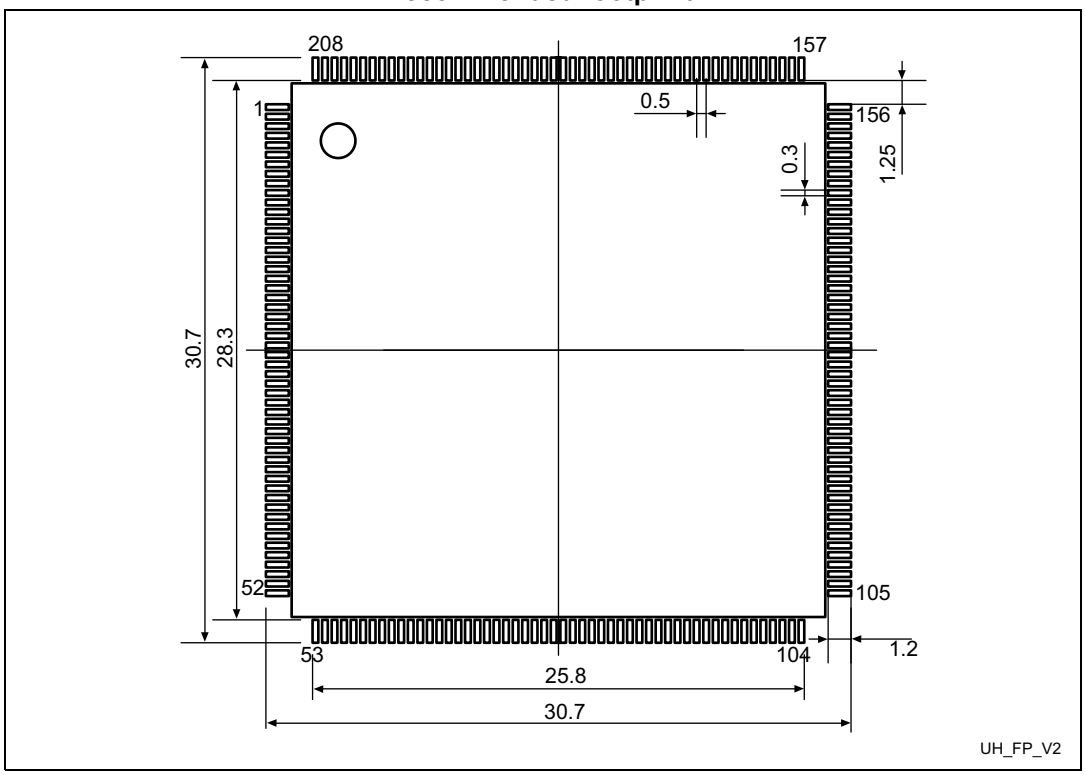

1. Dimensions are expressed in millimeters.

Device marking for LQFP208

The following figure gives an example of topside marking orientation versus pin 1 identifier location.

Other optional marking or inset/upset marks, which depend on assembly location, are not indicated below.

Figure 94. LQFP208 marking example (package top view)

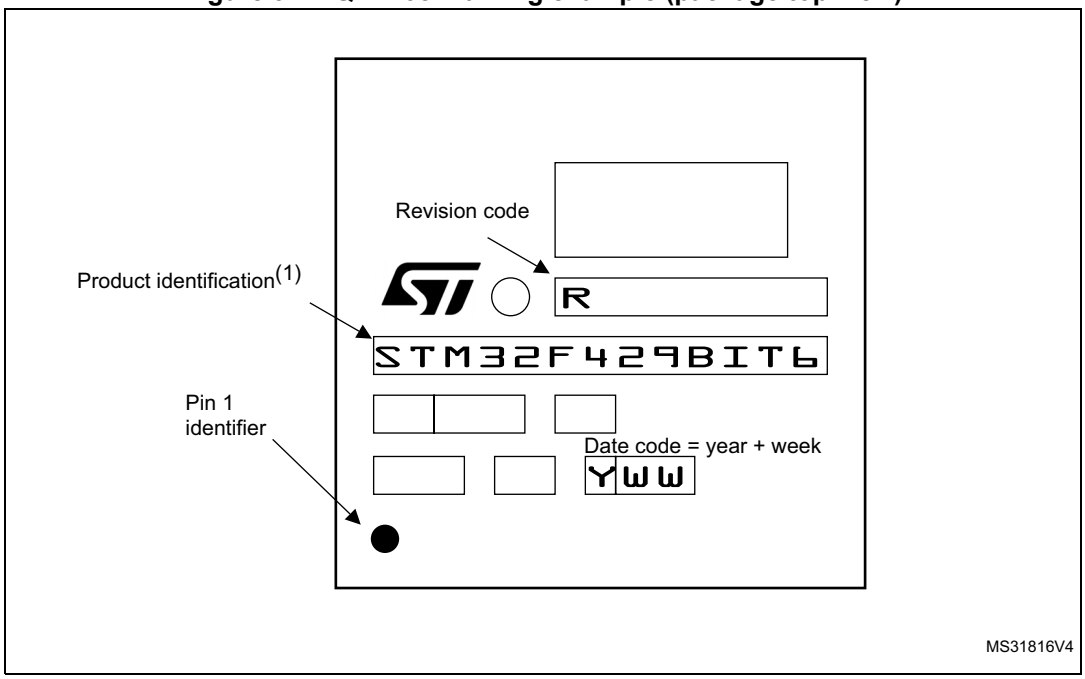

1. Parts marked as “ES”, “E” or accompanied by an Engineering Sample notification letter, are not yet qualified and therefore not yet ready to be used in production and any consequences deriving from such usage will not be at ST charge. In no event, ST will be liable for any customer usage of these engineering samples in production. ST Quality has to be contacted prior to any decision to use these Engineering Samples to run qualification activity.

7.6 UFBGA169 package information

Figure 95. UFBGA169 - 169-ball 7 x 7 mm 0.50 mm pitch, ultra fine pitch ball grid array package outline

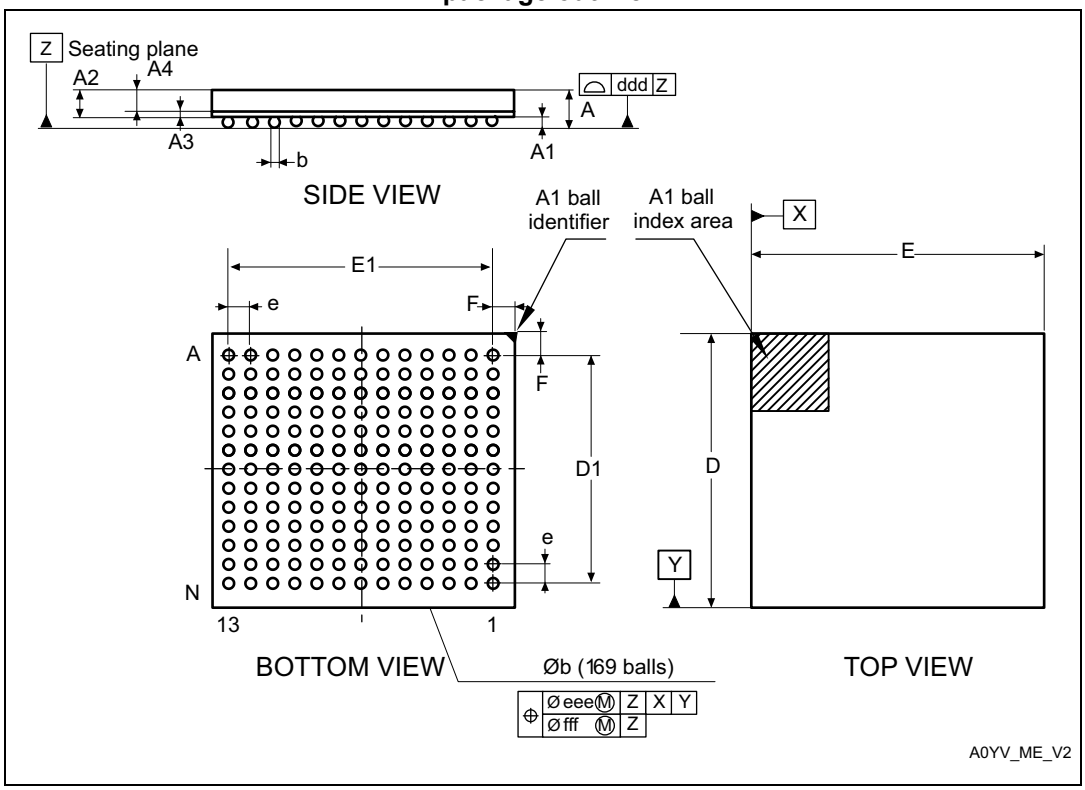

1. Drawing is not to scale.

Table 116. UFBGA169 - 169-ball 7 x 7 mm 0.50 mm pitch, ultra fine pitch ball grid array package mechanical data

Symbol	millimeters			inches(1)		
	Min	Typ	Max	Min	Typ	Max
A	0.460	0.530	0.600	0.0181	0.0209	0.0236
A1	0.050	0.080	0.110	0.0020	0.0031	0.0043
A2	0.400	0.450	0.500	0.0157	0.0177	0.0197
A3	-	0.130	-	-	0.0051	-
A4	0.270	0.320	0.370	0.0106	0.0126	0.0146
b	0.230	0.280	0.330	0.0091	0.0110	0.0130
D	6.950	7.000	7.050	0.2736	0.2756	0.2776
D1	5.950	6.000	6.050	0.2343	0.2362	0.2382
E	6.950	7.000	7.050	0.2736	0.2756	0.2776
E1	5.950	6.000	6.050	0.2343	0.2362	0.2382
e	-	0.500	-	-	0.0197	-

Table 116. UFBGA169 - 169-ball 7 x 7 mm 0.50 mm pitch, ultra fine pitch ball grid array package mechanical data (continued)

Symbol	millimeters			inches[1]		
	Min	Typ	Max	Min	Typ	Max
F	0.450	0.500	0.550	0.0177	0.0197	0.0217
ddd	-	-	0.100	-	-	0.0039
eee	-	-	0.150	-	-	0.0059
fff	-	-	0.050	-	-	0.0020

1. Values in inches are converted from mm and rounded to 4 decimal digits.

Figure 96. UFBGA169 - 169-ball, 7 x 7 mm, 0.50 mm pitch, ultra fine pitch ball grid array recommended footprint

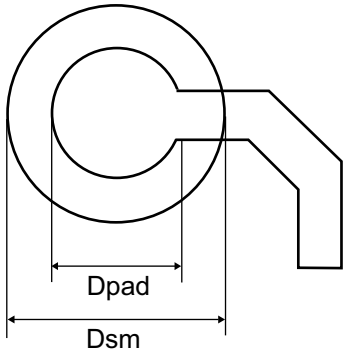

Table 117. UFBGA169 recommended PCB design rules (0.5 mm pitch BGA)

Dimension	Recommended values
Pitch	0.5
Dpad	0.27 mm
Dsm	0.35 mm typ. (depends on the soldermask registration tolerance)
Solder paste	0.27 mm aperture diameter.

Note: Non-solder mask defined (NSMD) pads are recommended.
4 to 6 mils solder paste screen printing process.

Device marking for UFBGA169

The following figure gives an example of topside marking orientation versus ball A1 identifier location.

Other optional marking or inset/upset marks, which depend on assembly location, are not indicated below.

Figure 97. UFBGA169 marking example (package top view)

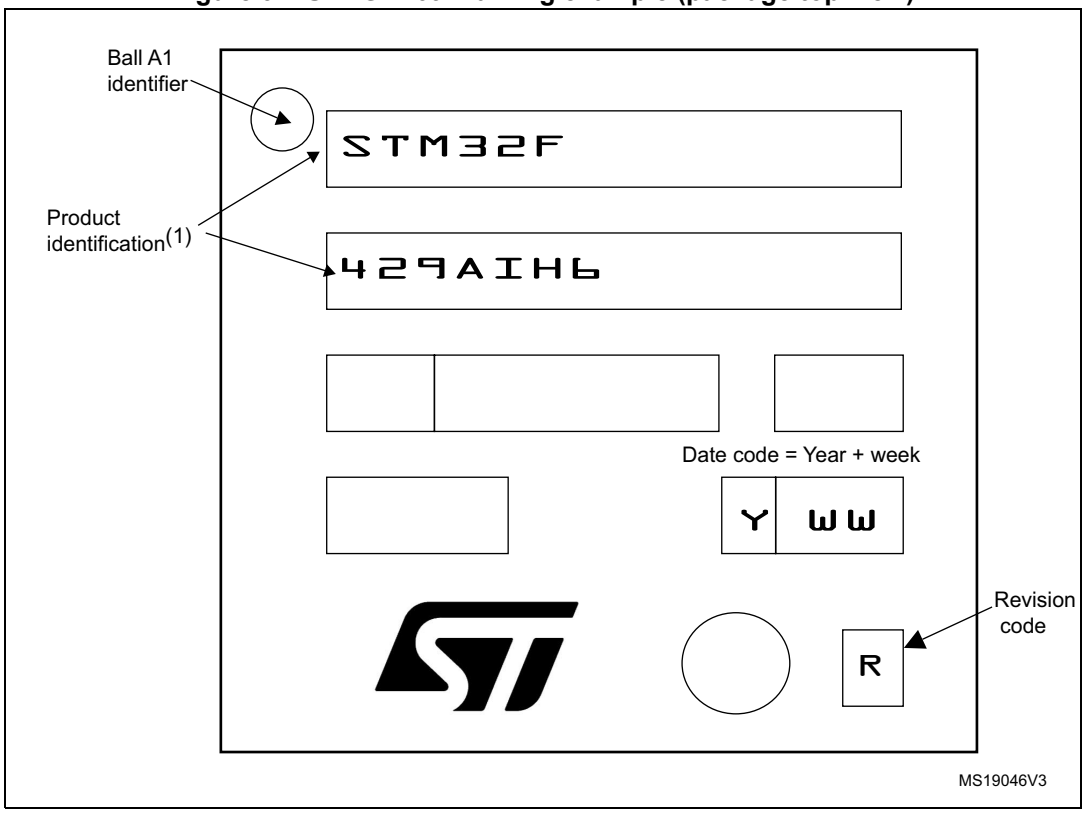

1. Parts marked as “ES”, “E” or accompanied by an Engineering Sample notification letter, are not yet qualified and therefore not yet ready to be used in production and any consequences deriving from such usage will not be at ST charge. In no event, ST will be liable for any customer usage of these engineering samples in production. ST Quality has to be contacted prior to any decision to use these Engineering Samples to run qualification activity.

7.7 UFBGA176+25 package information

Figure 98. UFBGA176+25 - ball 10 x 10 mm, 0.65 mm pitch ultra thin fine pitch ball grid array package outline

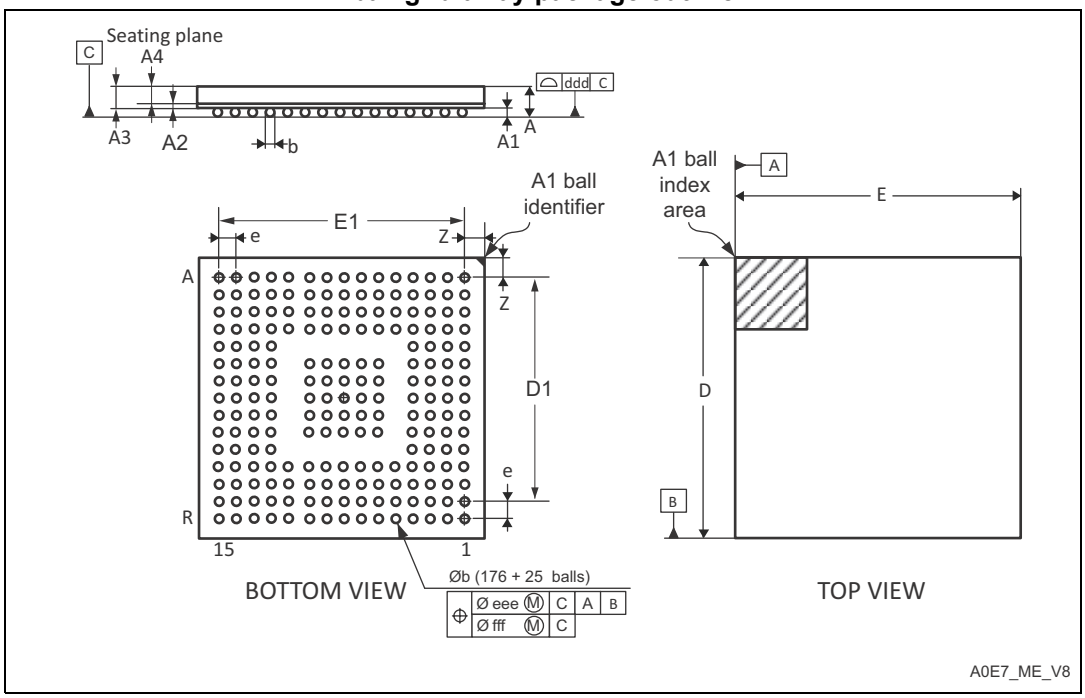

1. Drawing is not to scale.

Table 118. UFBGA176+25 - ball, 10 x 10 mm, 0.65 mm pitch, ultra fine pitch ball grid array package mechanical data

Symbol	millimeters			inches(1)		
	Min.	Typ.	Max.	Min.	Typ.	Max.
A	-	-	0.600	-	-	0.0236
A1	-	-	0.110	-	-	0.0043
A2	-	0.130	-	-	0.0051	-
A3	-	0.450	-	-	0.0177	-
A4	-	0.320	-	-	0.0126	-
b	0.240	0.290	0.340	0.0094	0.0114	0.0134
D	9.850	10.000	10.150	0.3878	0.3937	0.3996
D1	-	9.100	-	-	0.3583	-
E	9.850	10.000	10.150	0.3878	0.3937	0.3996
E1	-	9.100	-	-	0.3583	-
e	-	0.650	-	-	0.0256	-
Z	-	0.450	-	-	0.0177	-
ddd	-	-	0.080	-	-	0.0031

Table 118. UFBGA176+25 - ball, 10 x 10 mm, 0.65 mm pitch, ultra fine pitch ball grid array package mechanical data (continued)

Symbol	millimeters			inches(1)		
	Min.	Typ.	Max.	Min.	Typ.	Max.
eee	-	-	0.150	-	-	0.0059
fff	-	-	0.050	-	-	0.0020

1. Values in inches are converted from mm and rounded to 4 decimal digits.

Figure 99. UFBGA176+25-ball, 10 x 10 mm, 0.65 mm pitch, ultra fine pitch ball grid array package recommended footprint

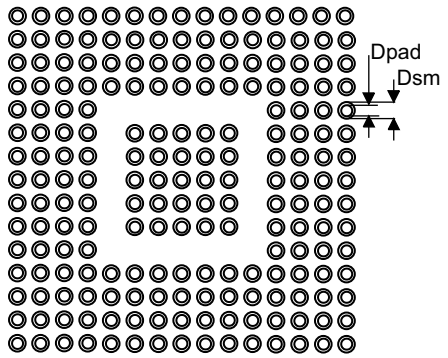

Table 119. UFBGA176+25 recommended PCB design rules (0.65 mm pitch BGA)

Dimension	Recommended values
Pitch	0.65 mm
Dpad	0.300 mm
Dsm	0.400 mm typ. (depends on the soldermask registration tolerance)
Stencil opening	0.300 mm
Stencil thickness	Between 0.100 mm and 0.125 mm
Pad trace width	0.100 mm

Device marking for UFBGA176+25

The following figure gives an example of topside marking orientation versus ball A1 identifier location.

Other optional marking or inset/upset marks, which depend on assembly location, are not indicated below.

Figure 100. UFBGA176+25 marking example (package top view)

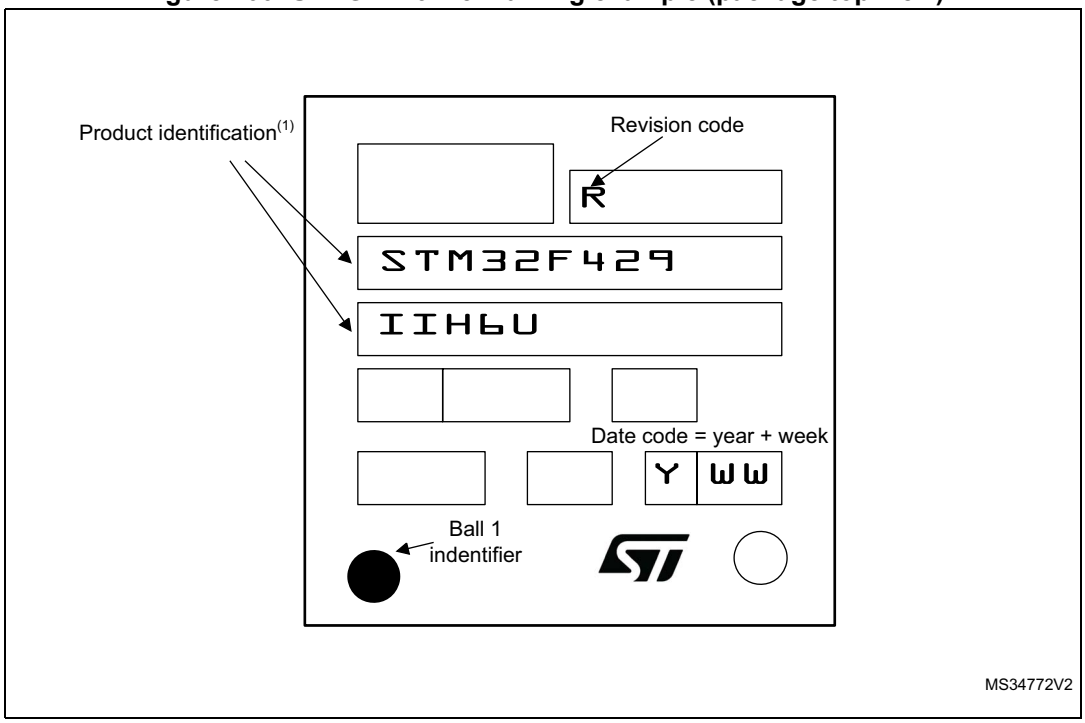

1. Parts marked as “ES”, “E” or accompanied by an Engineering Sample notification letter, are not yet qualified and therefore not yet ready to be used in production and any consequences deriving from such usage will not be at ST charge. In no event, ST will be liable for any customer usage of these engineering samples in production. ST Quality has to be contacted prior to any decision to use these Engineering Samples to run qualification activity.

7.8 TFBGA216 package information

Figure 101. TFBGA216 - 216 ball 13 × 13 mm 0.8 mm pitch thin fine pitch ball grid array package outline

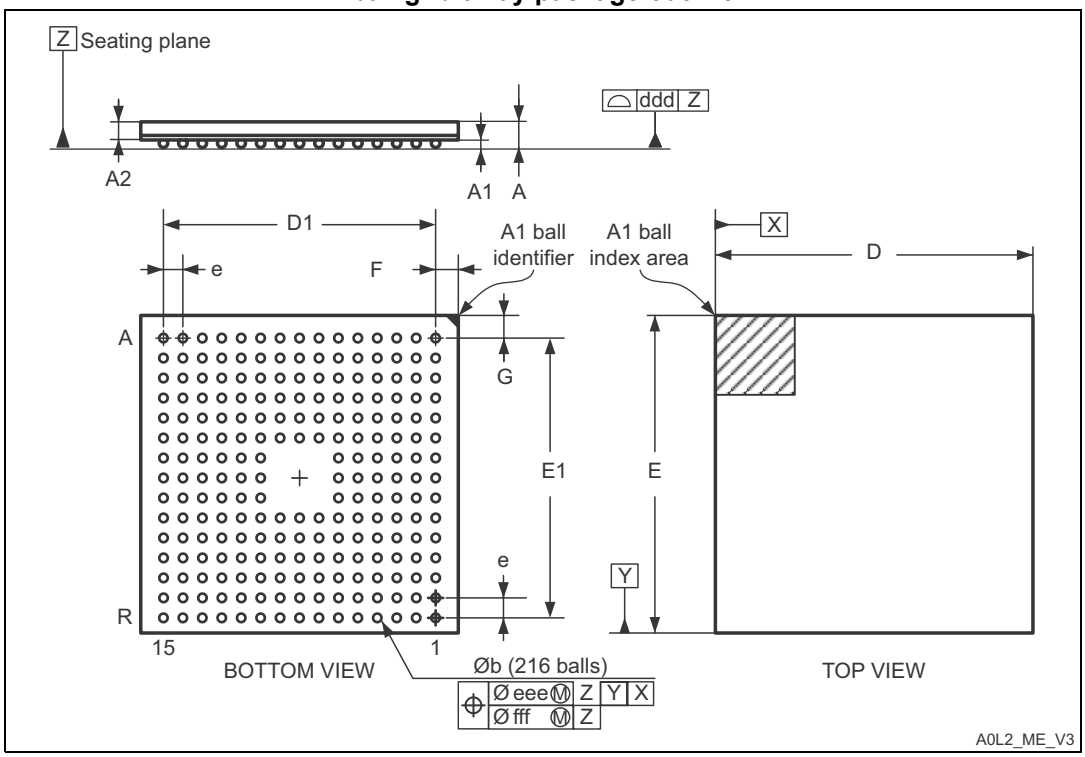

1. Drawing is not to scale.

Table 120. TFBGA216 - 216 ball 13 × 13 mm 0.8 mm pitch thin fine pitch ball grid array package mechanical data

Symbol	millimeters			inches(1)		
	Min	Typ	Max	Min	Typ	Max
A	-	-	1.100	-	-	0.0433
A1	0.150	-	-	0.0059	-	-
A2	-	0.760	-	-	0.0299	-
b	0.350	0.400	0.450	0.0138	0.0157	0.0177
D	12.850	13.000	13.150	0.5118	0.5118	0.5177
D1	-	11.200	-	-	0.4409	-
E	12.850	13.000	13.150	0.5118	0.5118	0.5177
E1	-	11.200	-	-	0.4409	-
e	-	0.800	-	-	0.0315	-
F	-	0.900	-	-	0.0354	-
ddd	-	-	0.100	-	-	0.0039

Table 120. TFBGA216 - 216 ball 13 × 13 mm 0.8 mm pitch thin fine pitch ball grid array package mechanical data (continued)

Symbol	millimeters			inches(1)		
	Min	Typ	Max	Min	Typ	Max
eee	-	-	0.150	-	-	0.0059
fff	-	-	0.080	-	-	0.0031

1. Values in inches are converted from mm and rounded to 4 decimal digits.

Device marking for TFBGA176

The following figure gives an example of topside marking orientation versus ball A1 identifier location.

Other optional marking or inset/upset marks, which depend on assembly location, are not indicated below.

Figure 102. TFBGA176 marking example (package top view)

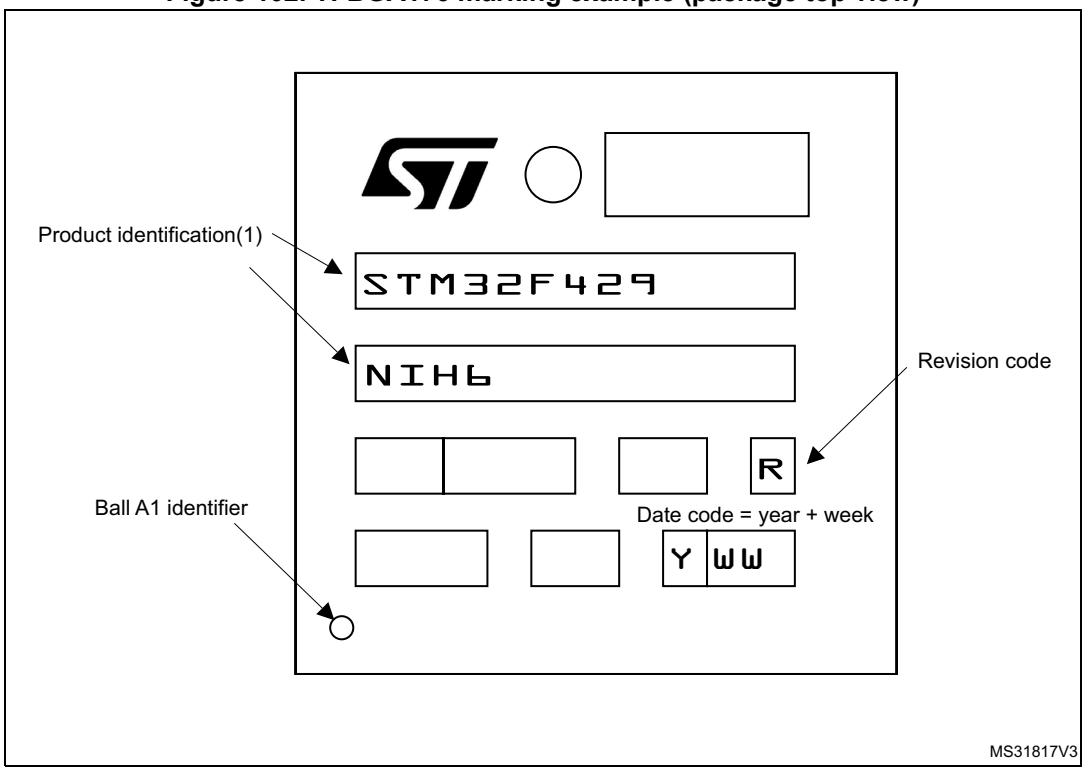

1. Parts marked as “ES”, “E” or accompanied by an Engineering Sample notification letter, are not yet qualified and therefore not yet ready to be used in production and any consequences deriving from such usage will not be at ST charge. In no event, ST will be liable for any customer usage of these engineering samples in production. ST Quality has to be contacted prior to any decision to use these Engineering Samples to run qualification activity.

7.9 Thermal characteristics

The maximum chip-junction temperature, T_J max, in degrees Celsius, may be calculated using the following equation:

T_J max = T_A max + (P_D max x Θ_{JA})

Where:

- T_A max is the maximum ambient temperature in °C,
- Θ_{JA} is the package junction-to-ambient thermal resistance, in °C/W,
- P_D max is the sum of P_{INT} max and $P_{I/O}$ max (P_D max = P_{INT} max + $P_{I/O}$max),
- P_{INT} max is the product of I_{DD} and V_{DD}, expressed in Watts. This is the maximum chip internal power.

$P_{I/O}$ max represents the maximum power dissipation on output pins where:

$P_{I/O}$ max = Σ (V_{OL} × I_{OL}) + Σ((V_{DD} – V_{OH}) × I_{OH}),

taking into account the actual V_{OL} / I_{OL} and V_{OH} / I_{OH} of the I/Os at low and high level in the application.

Table 121. Package thermal characteristics

Symbol	Parameter	Value	Unit
Θ_{JA}	**Thermal resistance junction-ambient** LQFP100 - 14 × 14 mm / 0.5 mm pitch	43	°C/W
	Thermal resistance junction-ambient WLCSP143	31.2	
	Thermal resistance junction-ambient LQFP144 - 20 × 20 mm / 0.5 mm pitch	40	
	Thermal resistance junction-ambient LQFP176 - 24 × 24 mm / 0.5 mm pitch	38	
	Thermal resistance junction-ambient LQFP208 - 28 × 28 mm / 0.5 mm pitch	19	
	Thermal resistance junction-ambient UFBGA169 - 7 × 7mm / 0.5 mm pitch	52	
	Thermal resistance junction-ambient UFBGA176 - 10× 10 mm / 0.5 mm pitch	39	
	Thermal resistance junction-ambient TFBGA216 - 13 × 13 mm / 0.8 mm pitch	29	

Reference document

JESD51-2 Integrated Circuits Thermal Test Method Environment Conditions - Natural Convection (Still Air). Available from www.jedec.org.

8 Part numbering

Table 122. Ordering information scheme

Example: STM32 F 429 V I T 6 xxx

Device family

STM32 = Arm-based 32-bit microcontroller

Product type

F = general-purpose

Device subfamily

427= STM32F427xx, USB OTG FS/HS, camera interface, Ethernet

429= STM32F429xx, USB OTG FS/HS, camera interface, Ethernet, LCD-TFT

Pin count

V = 100 pins

Z = 143 and 144 pins

A = 169 pins

I = 176 pins

B = 208 pins

N = 216 pins

Flash memory size

E = 512 Kbytes of Flash memory

G = 1024 Kbytes of Flash memory

I = 2048 Kbytes of Flash memory

Package

T = LQFP

H = BGA

Y = WLCSP

Temperature range

6 = Industrial temperature range, –40 to 85 °C.

7 = Industrial temperature range, –40 to 105 °C.

Options

xxx = programmed parts

TR = tape and reel

For a list of available options (speed, package, etc.) or for further information on any aspect of this device, please contact your nearest ST sales office.

Appendix A Recommendations when using internal reset OFF

When the internal reset is OFF, the following integrated features are no longer supported:

- The integrated power-on reset (POR) / power-down reset (PDR) circuitry is disabled.
- The brownout reset (BOR) circuitry must be disabled.
- The embedded programmable voltage detector (PVD) is disabled.
- V_{BAT} functionality is no more available and VBAT pin should be connected to V_{DD}.
- The over-drive mode is not supported.

A.1 Operating conditions

Table 123. Limitations depending on the operating power supply range

Operating power supply range	ADC operation	Maximum Flash memory access frequency with no wait states ($f_{Flashmax}$)	Maximum Flash memory access frequency with wait states (1)(2)	I/O operation	Possible Flash memory operations
V_{DD} =1.7 to 2.1 V(3)	Conversion time up to 1.2 Msps	20 MHz(4)	168 MHz with 8 wait states and over-drive OFF	– No I/O compensation	8-bit erase and program operations only

1. Applicable only when the code is executed from Flash memory. When the code is executed from RAM, no wait state is required.
2. Thanks to the ART accelerator and the 128-bit Flash memory, the number of wait states given here does not impact the execution speed from Flash memory since the ART accelerator allows to achieve a performance equivalent to 0 wait state program execution.
3. V_{DD}/V_{DDA} minimum value of 1.7 V, with the use of an external power supply supervisor (refer to *Section 3.17.1: Internal reset ON*).
4. Prefetch is not available. Refer to AN3430 application note for details on how to adjust performance and power.

Appendix B Application block diagrams

B.1 USB OTG full speed (FS) interface solutions

Figure 103. USB controller configured as peripheral-only and used in Full speed mode

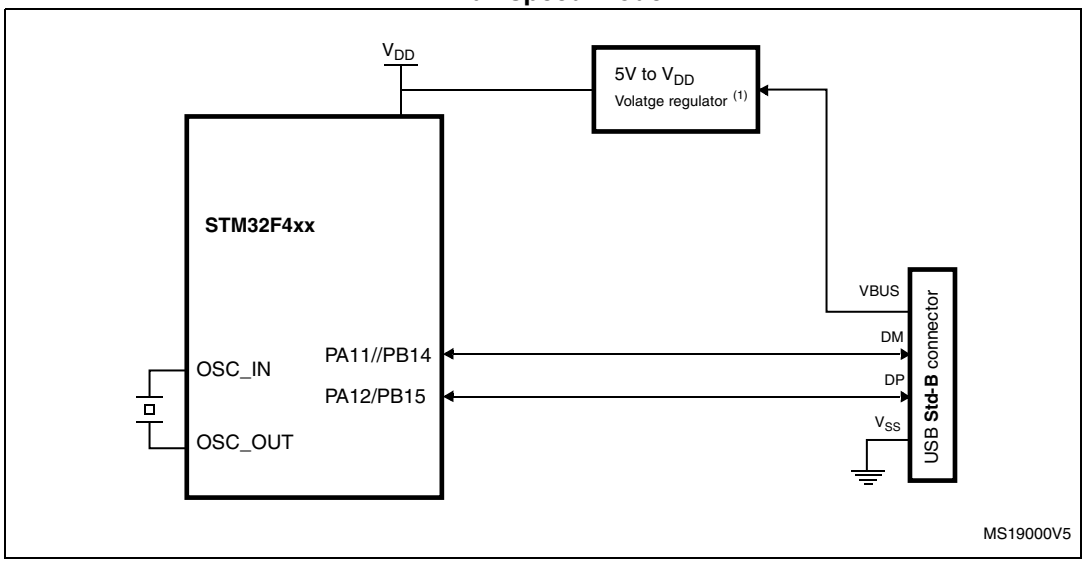

1. External voltage regulator only needed when building a V_{BUS} powered device.
2. The same application can be developed using the OTG HS in FS mode to achieve enhanced performance thanks to the large Rx/Tx FIFO and to a dedicated DMA controller.

Figure 104. USB controller configured as host-only and used in full speed mode

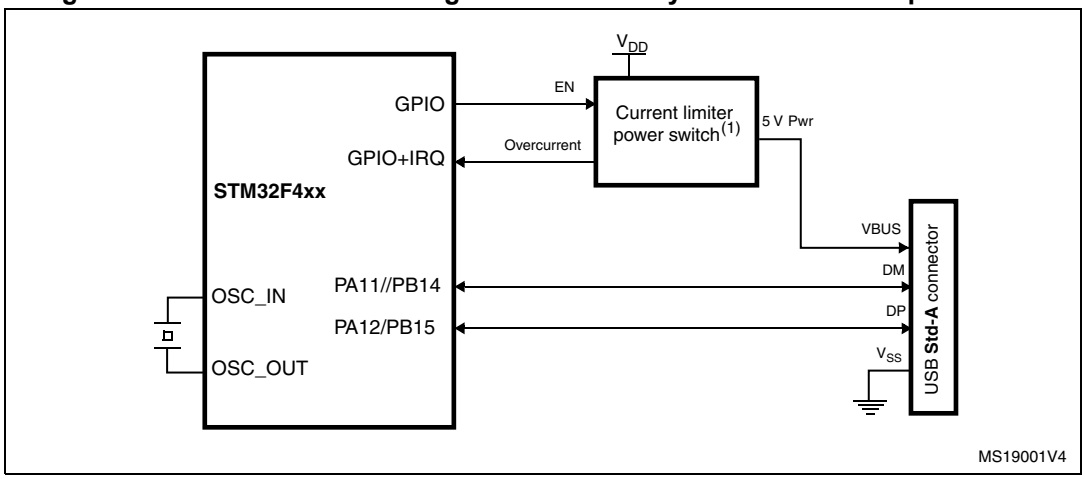

1. The current limiter is required only if the application has to support a V_{BUS} powered device. A basic power switch can be used if 5 V are available on the application board.
2. The same application can be developed using the OTG HS in FS mode to achieve enhanced performance thanks to the large Rx/Tx FIFO and to a dedicated DMA controller.

Figure 105. USB controller configured in dual mode and used in full speed mode

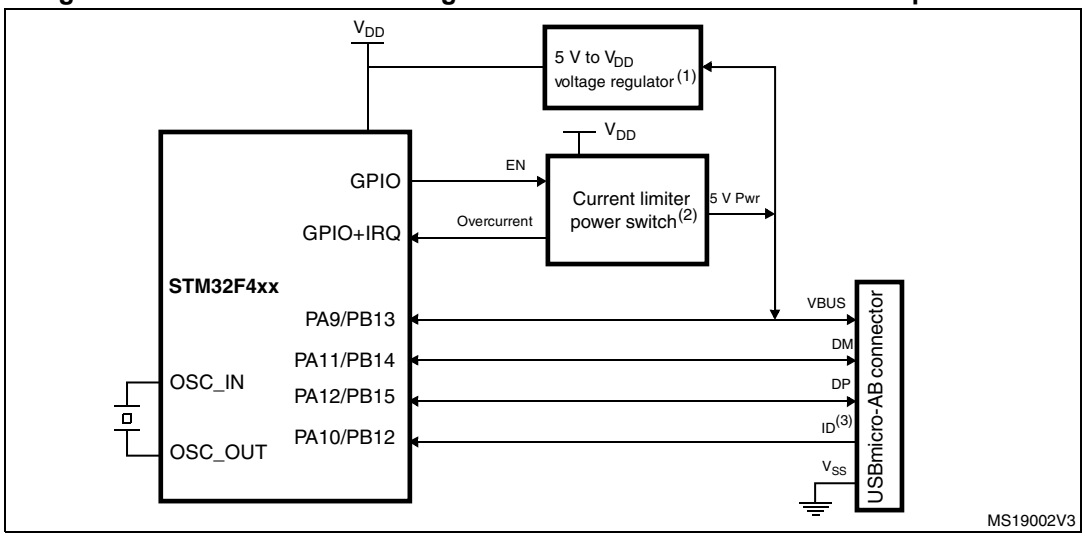

1. External voltage regulator only needed when building a V_{BUS} powered device.
2. The current limiter is required only if the application has to support a V_{BUS} powered device. A basic power switch can be used if 5 V are available on the application board.
3. The ID pin is required in dual role only.
4. The same application can be developed using the OTG HS in FS mode to achieve enhanced performance thanks to the large Rx/Tx FIFO and to a dedicated DMA controller.

B.2 USB OTG high speed (HS) interface solutions

Figure 106. USB controller configured as peripheral, host, or dual-mode and used in high speed mode

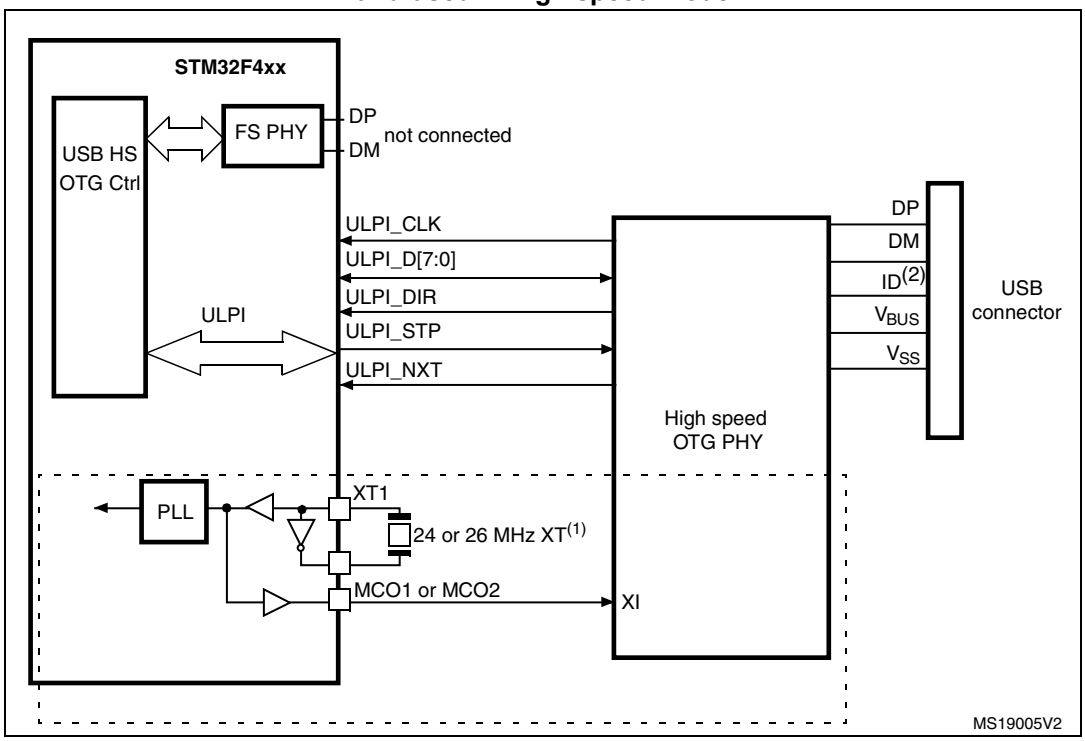

1. It is possible to use MCO1 or MCO2 to save a crystal. It is however not mandatory to clock the STM32F42x with a 24 or 26 MHz crystal when using USB HS. The above figure only shows an example of a possible connection.
2. The ID pin is required in dual role only.

B.3 Ethernet interface solutions

Figure 107. MII mode using a 25 MHz crystal

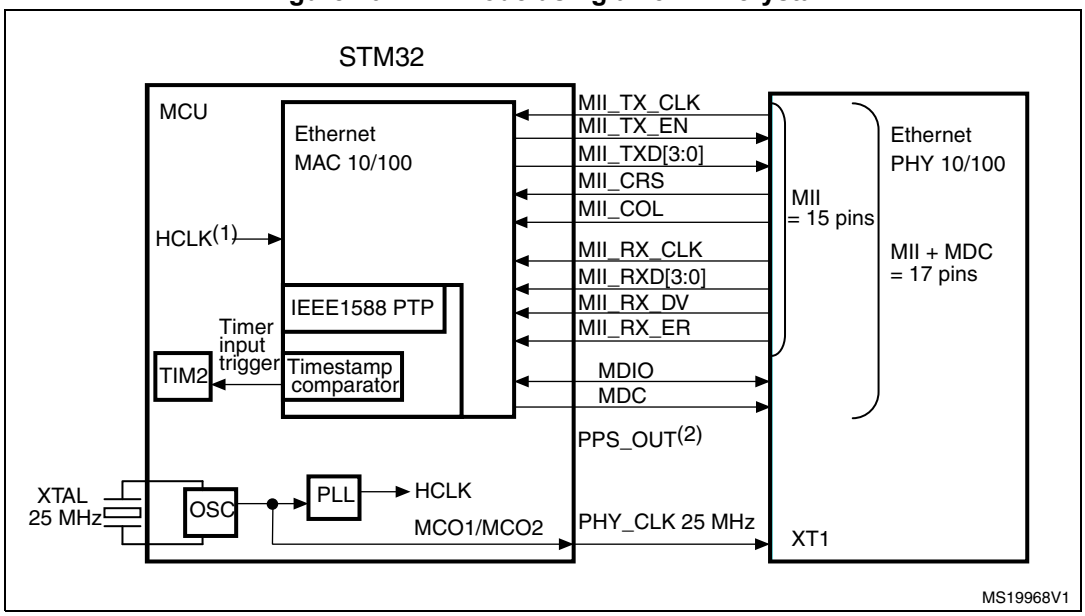

1. f_{HCLK} must be greater than 25 MHz.
2. Pulse per second when using IEEE1588 PTP optional signal.

Figure 108. RMII with a 50 MHz oscillator

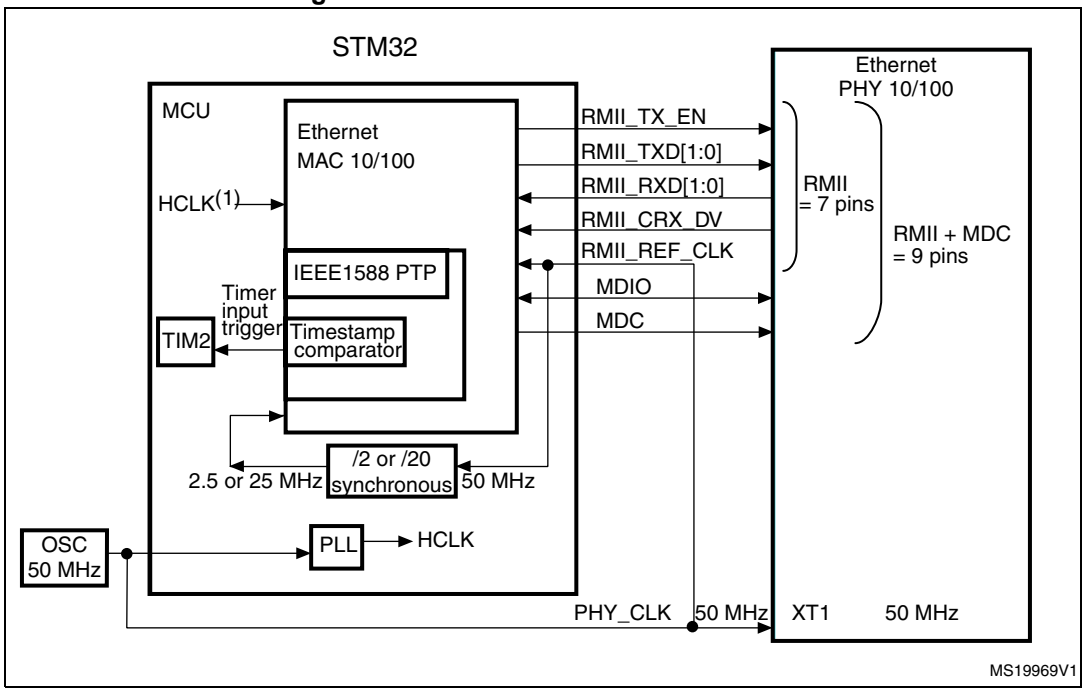

1. f_{HCLK} must be greater than 25 MHz.

Figure 109. RMII with a 25 MHz crystal and PHY with PLL

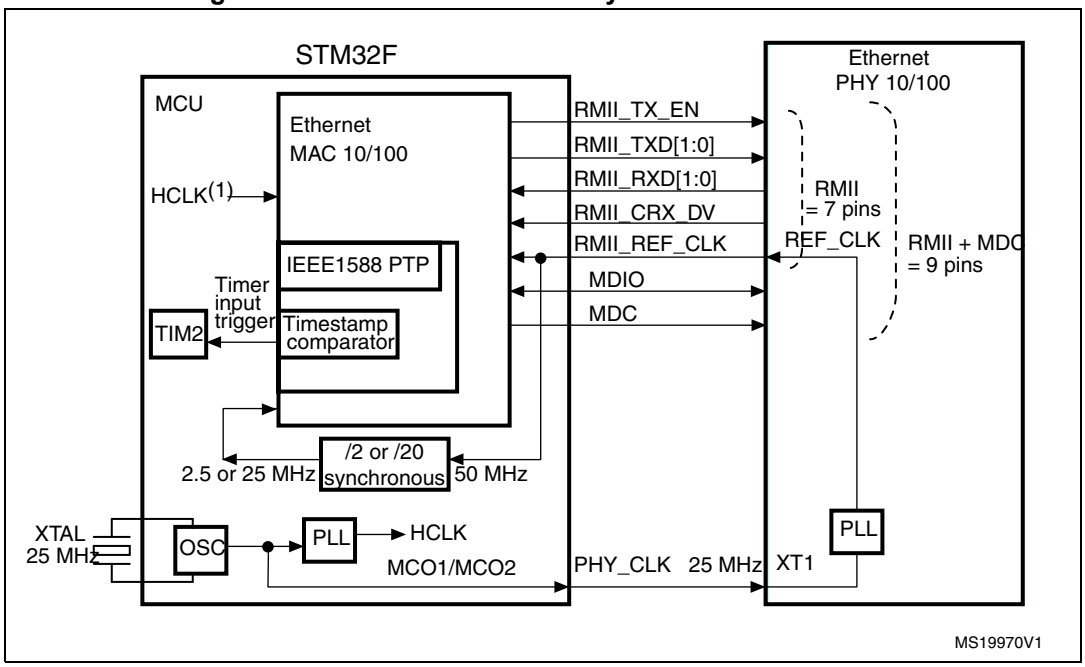

1. f_{HCLK} must be greater than 25 MHz.
2. The 25 MHz (PHY_CLK) must be derived directly from the HSE oscillator, before the PLL block.

9 Revision history

Table 124. Document revision history

Date	Revision	Changes
19-Mar-2013	1	Initial release.
10-Sep-2013	2	Added STM32F429xx part numbers and related informations. **STM32F427xx part numbers:** Replaced FSMC by FMC added Chrom-ART Accelerator and SAI interface. Increased core, timer, GPIOs, SPI maximum frequencies Updated *Figure 8*.Updated *Figure 9*. Removed note in *Section ·: Standby mode*. Updated *Figure 18*. Updated *Table 10: STM32F427xx and STM32F429xx pin and ball definitions* and *Table 12: STM32F427xx and STM32F429xx alternate function mapping*.. Modified *Figure 19: Memory map*. Updated *Table 17: General operating conditions*, *Table 18: Limitations depending on the operating power supply range*. Removed note 1 in *Table 22: reset and power control block characteristics*. Added *Table 23: Over-drive switching characteristics*. Updated *Section : Typical and maximum current consumption*, *Table 34: Switching output I/O current consumption*, *Table 35: Peripheral current consumption* and *Section : On-chip peripheral current consumption*. Updated *Table 36: Low-power mode wakeup timings*. Modified *Section : High-speed external user clock generated from an external source*, *Section : Low-speed external user clock generated from an external source*, and *Section 6.3.10: Internal clock source characteristics*. Updated *Table 43: Main PLL characteristics* and *Table 45: PLLISAI (audio and LCD-TFT PLL) characteristics*. Updated *Table 52: EMI characteristics*. Updated *Table 57: Output voltage characteristics* and *Table 58: I/O AC characteristics*. Updated *Table 60: TIMx characteristics*, *Table 61: I^2C characteristics*, *Table 62: SPI dynamic characteristics*, *Section : SAI characteristics*. Updated *Table 102: SDRAM read timings* and *Table 104: SDRAM write timings*.

Table 124. Document revision history

Date	Revision	Changes
24-Jan-2014	3	Added STM32F429xE part numbers featuring 512 Mbytes of Flash memory and UFBGA169 package. Added LPSDR SDRAM. Changed INTN into INTR in *Figure 4: STM32F427xx and STM32F429xx block diagram*. Added note 4 in *Table 2: STM32F427xx and STM32F429xx features and peripheral counts*. Updated *Section 3.15: Boot modes*. Updated for PA4 and PA5 in *Table 10: STM32F427xx and STM32F429xx pin and ball definitions*. Added V_{IN} for BOOT0 pins in *Table 14: Voltage characteristics*. Updated Note *6.*, added Note *1.*,and updated maximum V_{IN} for B pins in *Table 17: General operating conditions*. Updated maximum Flash memory access frequency with wait states for V_{DD} =1.8 to 2.1 V in *Table 18: Limitations depending on the operating power supply range*. Updated *Table 24: Typical and maximum current consumption in Run mode, code with data processing running from Flash memory (ART accelerator enabled except prefetch) or RAM* and *Table 25: Typical and maximum current consumption in Run mode, code with data processing running from Flash memory (ART accelerator disabled)*. Updated *Table 30: Typical current consumption in Run mode, code with data processing running from Flash memory or RAM, regulator ON (ART accelerator enabled except prefetch), VDD=1.7 V*, *Table 31: Typical current consumption in Run mode, code with data processing running from Flash memory, regulator OFF (ART accelerator enabled except prefetch)*, and *Table 32: Typical current consumption in Sleep mode, regulator ON, VDD=1.7 V*. Updated *Table 57: Output voltage characteristics*. Updated *Table 58: I/O AC characteristics*. Added *Figure 35*. Updated $t_{h(SDA)}$, $t_{r(SDA)}$ and $t_{r(SCL)}$ and added t_{SP} in *Table 61: I^2C characteristics*. Updated f_{SCK} in *Table 62: SPI dynamic characteristics*. Updated *Table 70: Dynamic characteristics: USB ULPI*. Updated *Section 6.3.26: FMC characteristics* conditions. Updated *Figure 73: SDRAM read access waveforms (CL = 1)* and *Figure 74: SDRAM write access waveforms*. Added *Table 103: LPSDR SDRAM read timings* and *Table 105: LPSDR SDRAM write timings*. Updated *Table 102: SDRAM read timings* and *Table 104: SDRAM write timings* and added note *2.Table 108: Dynamic characteristics: SD / MMC characteristics*.

Table 124. Document revision history

Date	Revision	Changes
24-Apr-2014	4	In the whole document, minimum supply voltage changed to 1.7 V when external power supply supervisor is used. Added DCMI_VSYNC alternate function on PG9 and updated note *6.* in *Table 10: STM32F427xx and STM32F429xx pin and ball definitions* and *Table 12: STM32F427xx and STM32F429xx alternate function mapping*. Added note *2.*below*Figure 16: STM32F42x UFBGA169 ballout*. Changed SVGA (800x600) into XGA1024x768) on cover page and in *Section 3.10: LCD-TFT controller (available only on STM32F429xx)*. Updated *Section 3.18.2: Regulator OFF*. Updated signal corresponding to pin L5 in *Figure 12: STM32F42x WLCSP143 ballout*. Added ACC_{HSE} in *Table 39: HSE 4-26 MHz oscillator characteristics* and ACC_{LSE} in *Table 40: LSE oscillator characteristics (fLSE = 32.768 kHz)*. Updated *Table 53: ESD absolute maximum ratings*. Updated V_{IH} in *Table 56: I/O static characteristics*. Added condition V_{DD}>1.7 V in *Table 58: I/O AC characteristics*. Updated conditions in *Table 62: SPI dynamic characteristics*. Added Z_{DRV} in *Table 67: USB OTG full speed electrical characteristics* Removed note 3 in *Table 80: Temperature sensor characteristics*. Added *Figure 82: LQFP100 marking example (package top view)*, *Figure 85: WLCSP143 marking example (package top view)*, *Figure 88: LQFP144 marking example (package top view)*, *Figure 91: LQFP176 marking (package top view)*, *Figure 94: LQFP208 marking example (package top view)*, *Figure 97: UFBGA169 marking example (package top view)* and *Figure 100: UFBGA176+25 marking example (package top view)*. Added *Appendix A: Recommendations when using internal reset OFF*. Removed Internal reset OFF hardware connection appendix.

Table 124. Document revision history

Date	Revision	Changes
19-Feb-2015	5	Update SPI/IS2 in *Table 2: STM32F427xx and STM32F429xx features and peripheral counts*. Updated LQFP208 in *Table 4: Regulator ON/OFF and internal reset ON/OFF availability*. Updated *Figure 19: Memory map*. Changed PLS[2:0]=101 (falling edge) maximum value in *Table 22: reset and power control block characteristics*. Updated current consumption with all peripherals disabled in *Table 24: Typical and maximum current consumption in Run mode, code with data processing running from Flash memory (ART accelerator enabled except prefetch) or RAM*. Updated note *1.* in *Table 28: Typical and maximum current consumptions in Standby mode*. Updated t_{WUSTOP} in *Table 36: Low-power mode wakeup timings*. Updated ESD standards and *Table 53: ESD absolute maximum ratings*. Updated *Table 56: I/O static characteristics*. *Section : I2C interface characteristics*: updated section introduction, removed Table *I2C characteristics*, Figure *I2C bus AC waveforms and measurement circuit* and Table *SCL frequency*; added *Table 61: I2C analog filter characteristics*. Updated measurement conditions in *Table 62: SPI dynamic characteristics*. Updated *Figure 51: Typical connection diagram using the ADC*. Updated *Section : Device marking for LQFP100*. Updated *Figure 83: WLCSP143 - 143-ball, 4.521x 5.547 mm, 0.4 mm pitch wafer level chip scale package outline* and *Table 111: WLCSP143 - 143-ball, 4.521x 5.547 mm, 0.4 mm pitch wafer level chip scale package mechanical data*; added *Figure 84: WLCSP143 - 143-ball, 4.521x 5.547 mm, 0.4 mm pitch wafer level chip scale recommended footprint* and *Table 112: WLCSP143 recommended PCB design rules (0.4 mm pitch)*. Updated *Figure 85: WLCSP143 marking example (package top view)* and related note. Updated *Section : Device marking for WLCSP143*. Updated *Section : Device marking for LQFP144*. Updated *Section : Device marking for LQFP176*. Updated *Figure 92: LQFP208 - 208-pin, 28 x 28 mm low-profile quad flat package outline*; Updated *Section : Device marking for LQFP208*. Modified UFBGA169 pitch, updated *Figure 95: UFBGA169 - 169-ball 7 x 7 mm 0.50 mm pitch, ultra fine pitch ball grid array package outline* and *Table 116: UFBGA169 - 169-ball 7 x 7 mm 0.50 mm pitch, ultra fine pitch ball grid array package mechanical data*; updated *Section : Device marking for LQFP208*. updated *Section : Device marking for UFBGA169*, *Section : Device marking for UFBGA176+25* and *Section : Device marking for TFBGA176*. Updated Z pin count in *Table 122: Ordering information scheme*.

Table 124. Document revision history

Date	Revision	Changes
17-Sep-2015	6	Updated notes related to the minimum and maximum values guaranteed by design, characterization or test in production. Updated $I_{DD_STOP_UDM}$ in *Table 27: Typical and maximum current consumptions in Stop mode*. Removed note related to tests in production in *Table 24: Typical and maximum current consumption in Run mode, code with data processing running from Flash memory (ART accelerator enabled except prefetch) or RAM* and *Table 26: Typical and maximum current consumption in Sleep mode*. Updated *Table 41: HSI oscillator characteristics*. *Figure 31* renamed *ACCHSI accuracy versus temperature* and updated. Updated *Figure 38: SPI timing diagram - slave mode and CPHA = 0*. Updated *Section : Ethernet characteristics*. Updated *Table 43: Main PLL characteristics*, *Table 44: PLLI2S (audio PLL) characteristics* and *Table 45: PLLISAI (audio and LCD-TFT PLL) characteristics*. Removed note 1 in *Table 75: ADC static accuracy at fADC = 18 MHz*, *Table 76: ADC static accuracy at fADC = 30 MHz* and *Table 77: ADC static accuracy at fADC = 36 MHz*. Updated $t_{d(SDCLKL_Data)}$ and $t_{h(SDCLKL_Data)}$ in *Table 104: SDRAM write timings*. Added *Figure 96: UFBGA169 - 169-ball, 7 x 7 mm, 0.50 mm pitch, ultra fine pitch ball grid array recommended footprint* and *Table 117: UFBGA169 recommended PCB design rules (0.5 mm pitch BGA)*. Added *Figure 99: UFBGA176+25-ball, 10 x 10 mm, 0.65 mm pitch, ultra fine pitch ball grid array package recommended footprint* and *Table 119: UFBGA176+25 recommended PCB design rules (0.65 mm pitch BGA)*.
30-Nov-2015	7	Updated $\|V_{SSX} - V_{SS}\|$ in *Table 14: Voltage characteristics* to add V_{REF-}. Updated $t_{d(TXEN)}$ and $t_{d(TXD)}$ minimum value in *Table 72: Dynamics characteristics: Ethernet MAC signals for RMII* and *Table 73: Dynamics characteristics: Ethernet MAC signals for MII*. Added V_{REF-} in *Table 74: ADC characteristics*. Added A1 minimum and maximum values in *Table 111: WLCSP143 - 143-ball, 4.521x 5.547 mm, 0.4 mm pitch wafer level chip scale package mechanical data*. Updated *Figure 86: LQFP144-144-pin, 20 x 20 mm low-profile quad flat package outline*. Updated *Figure 98: UFBGA176+25 - ball 10 x 10 mm, 0.65 mm pitch ultra thin fine pitch ball grid array package outline* and *Table 118: UFBGA176+25 - ball, 10 x 10 mm, 0.65 mm pitch, ultra fine pitch ball grid array package mechanical data*. Updated *Figure 101: TFBGA216 - 216 ball 13 × 13 mm 0.8 mm pitch thin fine pitch ball grid array package outline* and *Table 120: TFBGA216 - 216 ball 13 × 13 mm 0.8 mm pitch thin fine pitch ball grid array package mechanical data*.
21-Jan-2016	8	Updated *Figure 22: Power supply scheme*. Added $t_{d(TXD)}$ values corresponding to 1.71 V < V_{DD} < 3.6 V in *Table 72: Dynamics characteristics: Ethernet MAC signals for RMII*.

Table 124. Document revision history

Date	Revision	Changes
18-Jul-2016	9	Updated *Figure 1: Compatible board design STM32F10xx/STM32F2xx/STM32F4xx for LQFP100 package*. Added mission profile compliance with JEDEC JESD47 in *Section 6.2: Absolute maximum ratings*. Changed *Figure 31 HSI deviation versus temperature to ACCHSI versus temperature.* Updated R_{LOAD} in *Table 85: DAC characteristics*. Added note *2.* related to the position of the 0.1 µF capacitor below *Figure 37: Recommended NRST pin protection*. Updated *Figure 40: SPI timing diagram - master mode*. Added reference to optional marking or inset/upset marks in all package device marking sections. Updated *Figure 85: WLCSP143 marking example (package top view)*, *Figure 88: LQFP144 marking example (package top view)*, *Figure 91: LQFP176 marking (package top view)*, *Figure 94: LQFP208 marking example (package top view)*. Updated *Figure 98: UFBGA176+25 - ball 10 x 10 mm, 0.65 mm pitch ultra thin fine pitch ball grid array package outline* and *Table 118: UFBGA176+25 - ball, 10 x 10 mm, 0.65 mm pitch, ultra fine pitch ball grid array package mechanical data*.
19-Jan-2018	10	Updated Arm wordmark and added Arm logo in *Section 2: Description*. Updated LDC-TFT feature on cover page. Updated *Table 24: Typical and maximum current consumption in Run mode, code with data processing running from Flash memory (ART accelerator enabled except prefetch) or RAM* and *Table 26: Typical and maximum current consumption in Sleep mode*. R_{ADC} minimum value added in *Table 74: ADC characteristics*. LTDC clock output frequency changed to 83 MHz in *Table 107: LTDC characteristics*.

IMPORTANT NOTICE – PLEASE READ CAREFULLY

STMicroelectronics NV and its subsidiaries (“ST”) reserve the right to make changes, corrections, enhancements, modifications, and improvements to ST products and/or to this document at any time without notice. Purchasers should obtain the latest relevant information on ST products before placing orders. ST products are sold pursuant to ST’s terms and conditions of sale in place at the time of order acknowledgement.

Purchasers are solely responsible for the choice, selection, and use of ST products and ST assumes no liability for application assistance or the design of Purchasers’ products.

No license, express or implied, to any intellectual property right is granted by ST herein.

Resale of ST products with provisions different from the information set forth herein shall void any warranty granted by ST for such product.

ST and the ST logo are trademarks of ST. All other product or service names are the property of their respective owners.

Information in this document supersedes and replaces information previously supplied in any prior versions of this document.

© 2018 STMicroelectronics – All rights reserved