STM32F103x4
STM32F103x6

Low-density performance line, ARM-based 32-bit MCU with 16 or 32 KB Flash, USB, CAN, 6 timers, 2 ADCs, 6 com. interfaces

Datasheet − production data

Features

- ARM 32-bit Cortex™-M3 CPU Core
  - 72 MHz maximum frequency, 1.25 DMIPS/MHz (Dhrystone 2.1) performance at 0 wait state memory access
  - Single-cycle multiplication and hardware division
- Memories
  - 16 or 32 Kbytes of Flash memory
  - 6 or 10 Kbytes of SRAM
- Clock, reset and supply management
  - 2.0 to 3.6 V application supply and I/Os
  - POR, PDR, and programmable voltage detector (PVD)
  - 4-to-16 MHz crystal oscillator
  - Internal 8 MHz factory-trimmed RC
  - Internal 40 kHz RC
  - PLL for CPU clock
  - 32 kHz oscillator for RTC with calibration
- Low power
  - Sleep, Stop and Standby modes
  - V_{BAT} supply for RTC and backup registers
- 2 x 12-bit, 1 µs A/D converters (up to 16 channels)
  - Conversion range: 0 to 3.6 V
  - Dual-sample and hold capability
  - Temperature sensor
- DMA
  - 7-channel DMA controller
  - Peripherals supported: timers, ADC, SPIs, I^2Cs and USARTs
- Up to 51 fast I/O ports
  - 26/37/51 I/Os, all mappable on 16 external interrupt vectors and almost all 5 V-tolerant

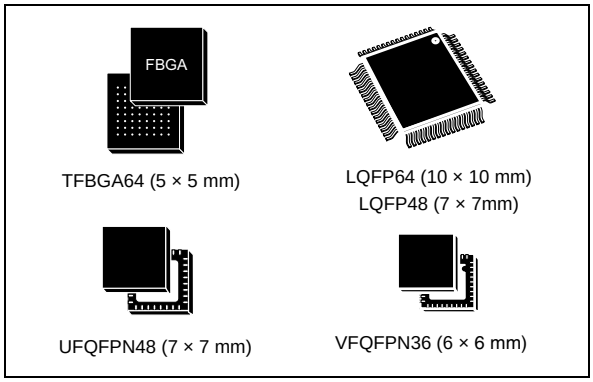

- Debug mode
  - Serial wire debug (SWD) & JTAG interfaces
- 6 timers
  - Two 16-bit timers, each with up to 4 IC/OC/PWM or pulse counter and quadrature (incremental) encoder input
  - 16-bit, motor control PWM timer with dead-time generation and emergency stop
  - 2 watchdog timers (Independent and Window)
  - SysTick timer 24-bit downcounter
- 6 communication interfaces
  - 1 x I^2C interface (SMBus/PMBus)
  - 2 × USARTs (ISO 7816 interface, LIN, IrDA capability, modem control)
  - 1 × SPI (18 Mbit/s)
  - CAN interface (2.0B Active)
  - USB 2.0 full-speed interface
- CRC calculation unit, 96-bit unique ID
- Packages are ECOPACK®

Table 1. Device summary

Reference	Part number
STM32F103x4	STM32F103C4, STM32F103R4, STM32F103T4
STM32F103x6	STM32F103C6, STM32F103R6, STM32F103T6

This is information on a product in full production. www.st.com

Contents

1 Introduction 9

2 Description 10

2.1 Device overview 11

2.2 Full compatibility throughout the family 14

2.3 Overview 15

2.3.1 ARM® Cortex™-M3 core with embedded Flash and SRAM 15

2.3.2 Embedded Flash memory 15

2.3.3 CRC (cyclic redundancy check) calculation unit 15

2.3.4 Embedded SRAM 15

2.3.5 Nested vectored interrupt controller (NVIC) 15

2.3.6 External interrupt/event controller (EXTI) 16

2.3.7 Clocks and startup 16

2.3.8 Boot modes 16

2.3.9 Power supply schemes 16

2.3.10 Power supply supervisor 16

2.3.11 Voltage regulator 17

2.3.12 Low-power modes 17

2.3.13 DMA 18

2.3.14 RTC (real-time clock) and backup registers 18

2.3.15 Timers and watchdogs 18

2.3.16 I²C bus 20

2.3.17 Universal synchronous/asynchronous receiver transmitter (USART) . . 20

2.3.18 Serial peripheral interface (SPI) 20

2.3.19 Controller area network (CAN) 20

2.3.20 Universal serial bus (USB) 20

2.3.21 GPIOs (general-purpose inputs/outputs) 21

2.3.22 ADC (analog-to-digital converter) 21

2.3.23 Temperature sensor 21

2.3.24 Serial wire JTAG debug port (SWJ-DP) 21

3 Pinouts and pin description 22

4 Memory mapping 29

5 Electrical characteristics 30

5.1 Parameter conditions 30

5.1.1 Minimum and maximum values 30

5.1.2 Typical values 30

5.1.3 Typical curves 30

5.1.4 Loading capacitor 30

5.1.5 Pin input voltage 30

5.1.6 Power supply scheme 31

5.1.7 Current consumption measurement 32

5.2 Absolute maximum ratings 32

5.3 Operating conditions 33

5.3.1 General operating conditions 33

5.3.2 Operating conditions at power-up / power-down 34

5.3.3 Embedded reset and power control block characteristics 34

5.3.4 Embedded reference voltage 36

5.3.5 Supply current characteristics 36

5.3.6 External clock source characteristics 46

5.3.7 Internal clock source characteristics 50

5.3.8 PLL characteristics 52

5.3.9 Memory characteristics 52

5.3.10 EMC characteristics 53

5.3.11 Absolute maximum ratings (electrical sensitivity) 55

5.3.12 I/O current injection characteristics 56

5.3.13 I/O port characteristics 57

5.3.14 NRST pin characteristics 62

5.3.15 TIM timer characteristics 63

5.3.16 Communications interfaces 64

5.3.17 CAN (controller area network) interface 69

5.3.18 12-bit ADC characteristics 70

5.3.19 Temperature sensor characteristics 74

6 Package information 75

6.1 VFQFPN36 Package 75

6.2 UFQFPN48 package information 79

6.3 LQFP64 package information 82

6.4 TFBGA64 package information 85

6.5 LQFP48 package information 88
6.6 Thermal characteristics 92
6.6.1 Reference document 92
6.6.2 Selecting the product temperature range 93

7 Ordering information scheme 95

8 Revision history 96

List of tables

Table 1. Device summary . . . 1
Table 2. STM32F103xx low-density device features and peripheral counts. . . . 11
Table 3. STM32F103xx family . . . 14
Table 4. Timer feature comparison . . . 18
Table 5. Low-density STM32F103xx pin definitions . . . 26
Table 6. Voltage characteristics . . . 32
Table 7. Current characteristics . . . 33
Table 8. Thermal characteristics . . . 33
Table 9. General operating conditions . . . 33
Table 10. Operating conditions at power-up / power-down . . . 34
Table 11. Embedded reset and power control block characteristics. . . . 35
Table 12. Embedded internal reference voltage . . . 36
Table 13. Maximum current consumption in Run mode, code with data processing running from Flash . . . 37
Table 14. Maximum current consumption in Run mode, code with data processing running from RAM. . . . 37
Table 15. Maximum current consumption in Sleep mode, code running from Flash or RAM . . . 39
Table 16. Typical and maximum current consumptions in Stop and Standby modes . . . 40
Table 17. Typical current consumption in Run mode, code with data processing running from Flash . . . 43
Table 18. Typical current consumption in Sleep mode, code running from Flash or RAM . . . 44
Table 19. Peripheral current consumption . . . 45
Table 20. High-speed external user clock characteristics. . . . 46
Table 21. Low-speed external user clock characteristics . . . 46
Table 22. HSE 4-16 MHz oscillator characteristics . . . 48
Table 23. LSE oscillator characteristics (f_{LSE} = 32.768 kHz) . . . 49
Table 24. HSI oscillator characteristics. . . . 50
Table 25. LSI oscillator characteristics . . . 51
Table 26. Low-power mode wakeup timings . . . 52
Table 27. PLL characteristics . . . 52
Table 28. Flash memory characteristics . . . 52
Table 29. Flash memory endurance and data retention . . . 53
Table 30. EMS characteristics . . . 54
Table 31. EMI characteristics . . . 54
Table 32. ESD absolute maximum ratings . . . 55
Table 33. Electrical sensitivities . . . 55
Table 34. I/O current injection susceptibility . . . 56
Table 35. I/O static characteristics . . . 57
Table 36. Output voltage characteristics . . . 60
Table 37. I/O AC characteristics . . . 61
Table 38. NRST pin characteristics . . . 62
Table 39. TIMx characteristics . . . 63
Table 40. I^2C characteristics. . . . 64
Table 41. SCL frequency (f_{PCLK1}= 36 MHz.,V_{DD_I2C} = 3.3 V) . . . 65
Table 42. SPI characteristics . . . 66
Table 43. USB startup time. . . . 68

Table 44. USB DC electrical characteristics . . . 69
Table 45. USB: Full-speed electrical characteristics. . . . 69
Table 46. ADC characteristics . . . 70
Table 47. R_{AIN} max for f_{ADC} = 14 MHz . . . 71
Table 48. ADC accuracy - limited test conditions . . . 71
Table 49. ADC accuracy . . . 72
Table 50. TS characteristics . . . 74
Table 51. VFQFPN36 - 36-pin, 6x6 mm, 0.5 mm pitch very thin profile fine pitch quad flat package mechanical data . . . 76
Table 52. UFQFPN48 - 48-lead, 7x7 mm, 0.5 mm pitch, ultra thin fine pitch quad flat package mechanical data . . . 80
Table 53. LQFP64 - 64-pin, 10 x 10 mm low-profile quad flat package mechanical data . . . 82
Table 54. TFBGA64 – 64-ball, 5 x 5 mm, 0.5 mm pitch, thin profile fine pitch ball grid array package mechanical data . . . 85
Table 55. TFBGA64 recommended PCB design rules (0.5 mm pitch BGA). . . . 86
Table 56. LQFP48 - 48-pin, 7 x 7 mm low-profile quad flat package mechanical data . . . 89
Table 57. Package thermal characteristics . . . 92
Table 58. Ordering information scheme . . . 95
Table 59. Document revision history . . . 96

List of figures

Figure 1. STM32F103xx performance line block diagram . . . 12
Figure 2. Clock tree . . . 13
Figure 3. STM32F103xx performance line LQFP64 pinout . . . 22
Figure 4. STM32F103xx performance line TFBGA64 ballout . . . 23
Figure 5. STM32F103xx performance line LQFP48 pinout . . . 24
Figure 6. STM32F103xx performance line UFQFPN48 pinout . . . 24
Figure 7. STM32F103xx performance line VFQFPN36 pinout . . . 25
Figure 8. Memory map . . . 29
Figure 9. Pin loading conditions . . . 31
Figure 10. Pin input voltage . . . 31
Figure 11. Power supply scheme . . . 31
Figure 12. Current consumption measurement scheme . . . 32
Figure 13. Typical current consumption in Run mode versus frequency (at 3.6 V) - code with data processing running from RAM, peripherals enabled . . . 38
Figure 14. Typical current consumption in Run mode versus frequency (at 3.6 V) - code with data processing running from RAM, peripherals disabled . . . 38
Figure 15. Typical current consumption on V_{BAT} with RTC on versus temperature at different V_{BAT} values . . . 40
Figure 16. Typical current consumption in Stop mode with regulator in Run mode versus temperature at V_{DD} = 3.3 V and 3.6 V . . . 41
Figure 17. Typical current consumption in Stop mode with regulator in Low-power mode versus temperature at V_{DD} = 3.3 V and 3.6 V . . . 41
Figure 18. Typical current consumption in Standby mode versus temperature at V_{DD} = 3.3 V and 3.6 V . . . 42
Figure 19. High-speed external clock source AC timing diagram . . . 47
Figure 20. Low-speed external clock source AC timing diagram . . . 47
Figure 21. Typical application with an 8 MHz crystal . . . 48
Figure 22. Typical application with a 32.768 kHz crystal . . . 50
Figure 23. Standard I/O input characteristics - CMOS port . . . 58
Figure 24. Standard I/O input characteristics - TTL port . . . 58
Figure 25. 5 V tolerant I/O input characteristics - CMOS port . . . 59
Figure 26. 5 V tolerant I/O input characteristics - TTL port . . . 59
Figure 27. I/O AC characteristics definition . . . 62
Figure 28. Recommended NRST pin protection . . . 63
Figure 29. I^2C bus AC waveforms and measurement circuit . . . 65
Figure 30. SPI timing diagram - slave mode and CPHA = 0 . . . 67
Figure 31. SPI timing diagram - slave mode and CPHA = 1(1) . . . 67
Figure 32. SPI timing diagram - master mode(1) . . . 68
Figure 33. USB timings: definition of data signal rise and fall time . . . 69
Figure 34. ADC accuracy characteristics . . . 72
Figure 35. Typical connection diagram using the ADC . . . 73
Figure 36. Power supply and reference decoupling (V_{REF+} not connected to V_{DDA}) . . . 73
Figure 37. Power supply and reference decoupling(V_{REF+} connected to V_{DDA}) . . . 74
Figure 38. VFQFPN36 - 36-pin, 6x6 mm, 0.5 mm pitch very thin profile fine pitch quad flat package outline . . . 75
Figure 39. VFQFPN36 - 36-pin, 6x6 mm, 0.5 mm pitch very thin profile fine pitch quad flat package recommended footprint . . . 77
Figure 40. VFQFPN36 marking example (package view) . . . 78

Figure 41. UFQFPN48 - 48-lead, 7x7 mm, 0.5 mm pitch, ultra thin fine pitch quad flat package outline . . . 79
Figure 42. UFQFPN48 - 48-lead, 7x7 mm, 0.5 mm pitch, ultra thin fine pitch quad flat package recommended footprint . . . 80
Figure 43. UFQFPN48 marking example (package view . . . 81
Figure 44. LQFP64 - 64-pin, 10 x 10 mm low-profile quad flat package outline . . . 82
Figure 45. LQFP64 - 64-pin, 10 x 10 mm low-profile quad flat package recommended footprint . . . 83
Figure 46. LQFP64 marking example (package view . . . 84
Figure 47. TFBGA64 – 64-ball, 5 x 5 mm, 0.5 mm pitch thin profile fine pitch ball grid array package outline . . . 85
Figure 48. TFBGA64 – 64-ball, 5 x 5 mm, 0.5 mm pitch, thin profile fine pitch ball grid array, recommended footprint . . . 86
Figure 49. TFBGA64 marking example (package view . . . 87
Figure 50. LQFP48 - 48-pin, 7 x 7 mm low-profile quad flat package outline . . . 88
Figure 51. LQFP48 - 48-pin, 7 x 7 mm low-profile quad flat package recommended footprint . . . 90
Figure 52. LQFP48 marking example (package view . . . 91
Figure 53. LQFP64 P_D max vs. T_A . . . 94

1 Introduction

This datasheet provides the ordering information and mechanical device characteristics of the STM32F103x4 and STM32F103x6 low-density performance line microcontrollers. For more details on the whole STMicroelectronics STM32F103xx family, please refer to *Section 2.2: Full compatibility throughout the family*.

The low-density STM32F103xx datasheet should be read in conjunction with the low-, medium- and high-density STM32F10xxx reference manual.
The reference and Flash programming manuals are both available from the STMicroelectronics website www.st.com.

For information on the Cortex™-M3 core please refer to the Cortex™-M3 Technical Reference Manual, available from the www.arm.com website.

2 Description

The STM32F103x4 and STM32F103x6 performance line family incorporates the high-performance ARM® Cortex™-M3 32-bit RISC core operating at a 72 MHz frequency, high-speed embedded memories (Flash memory up to 32 Kbytes and SRAM up to 6 Kbytes), and an extensive range of enhanced I/Os and peripherals connected to two APB buses. All devices offer two 12-bit ADCs, three general purpose 16-bit timers plus one PWM timer, as well as standard and advanced communication interfaces: up to two I^2Cs and SPIs, three USARTs, an USB and a CAN.

The STM32F103xx low-density performance line family operates from a 2.0 to 3.6 V power supply. It is available in both the –40 to +85 °C temperature range and the –40 to +105 °C extended temperature range. A comprehensive set of power-saving mode allows the design of low-power applications.

The STM32F103xx low-density performance line family includes devices in four different package types: from 36 pins to 64 pins. Depending on the device chosen, different sets of peripherals are included, the description below gives an overview of the complete range of peripherals proposed in this family.

These features make the STM32F103xx low-density performance line microcontroller family suitable for a wide range of applications such as motor drives, application control, medical and handheld equipment, PC and gaming peripherals, GPS platforms, industrial applications, PLCs, inverters, printers, scanners, alarm systems, video intercoms, and HVACs.

2.1 Device overview

Table 2. STM32F103xx low-density device features and peripheral counts

Peripheral		STM32F103Tx		STM32F103Cx		STM32F103Rx	
Flash - Kbytes		16	32	16	32	16	32
SRAM - Kbytes		6	10	6	10	6	10
Timers	General-purpose	2	2	2	2	2	2
	Advanced-control	1		1		1	
Communication	SPI	1	1	1	1	1	1
	I^2C	1	1	1	1	1	1
	USART	2	2	2	2	2	2
	USB	1	1	1	1	1	1
	CAN	1	1	1	1	1	1
GPIOs		26		37		51	
12-bit synchronized ADC Number of channels		2 10 channels		2 10 channels		2 16 channels(1)	
CPU frequency		72 MHz					
Operating voltage		2.0 to 3.6 V					
Operating temperatures		Ambient temperatures: –40 to +85 °C /–40 to +105 °C (see *Table 9*) Junction temperature: –40 to + 125 °C (see *Table 9*)					
Packages		VFQFPN36		LQFP48, UFQFPN48		LQFP64, TFBGA64	

1. On the TFBGA64 package only 15 channels are available (one analog input pin has been replaced by ‘Vref+’).

Figure 1. STM32F103xx performance line block diagram

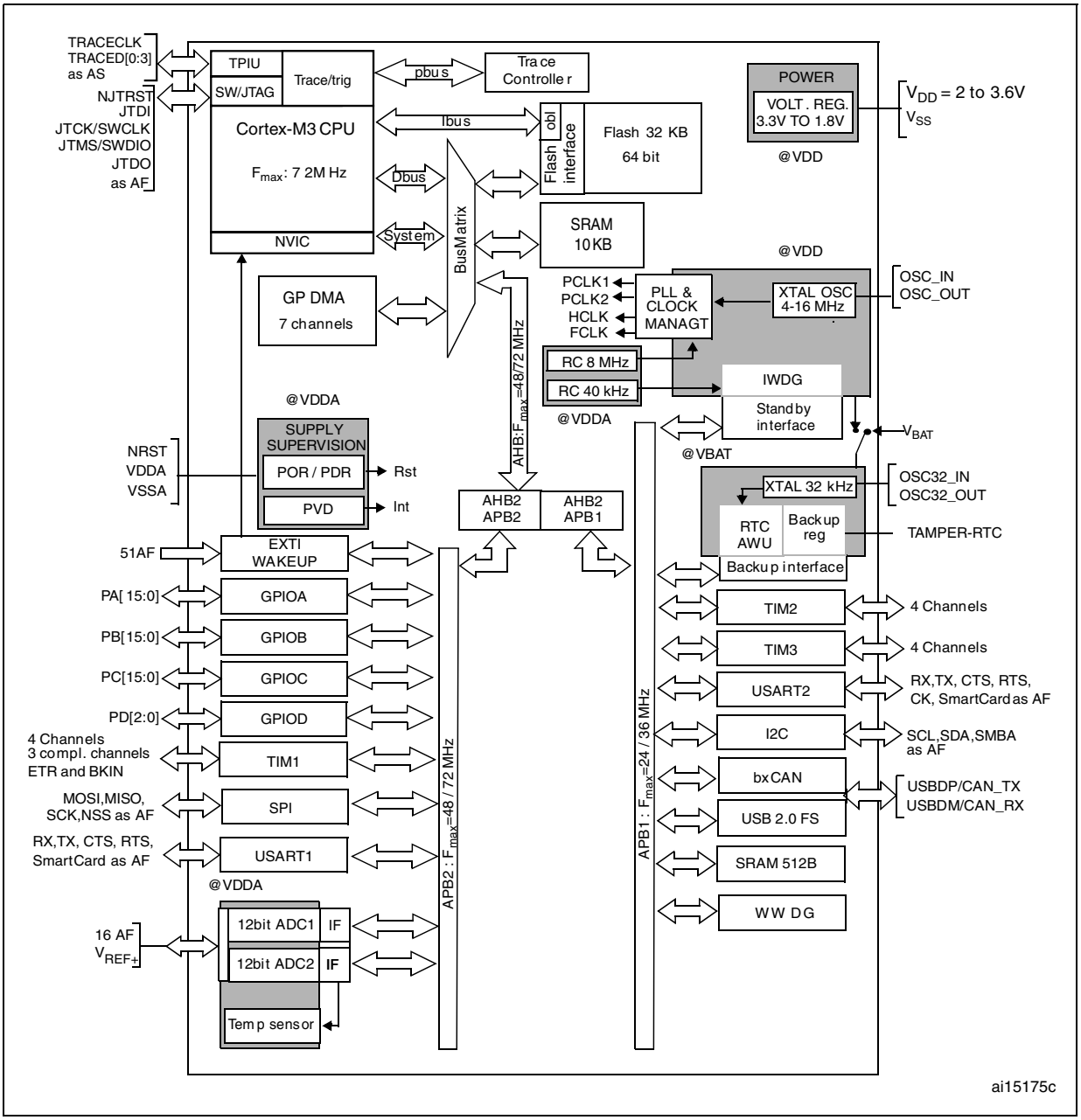

1. T_A = –40 °C to +105 °C (junction temperature up to 125 °C).
2. AF = alternate function on I/O port pin.

Figure 2. Clock tree

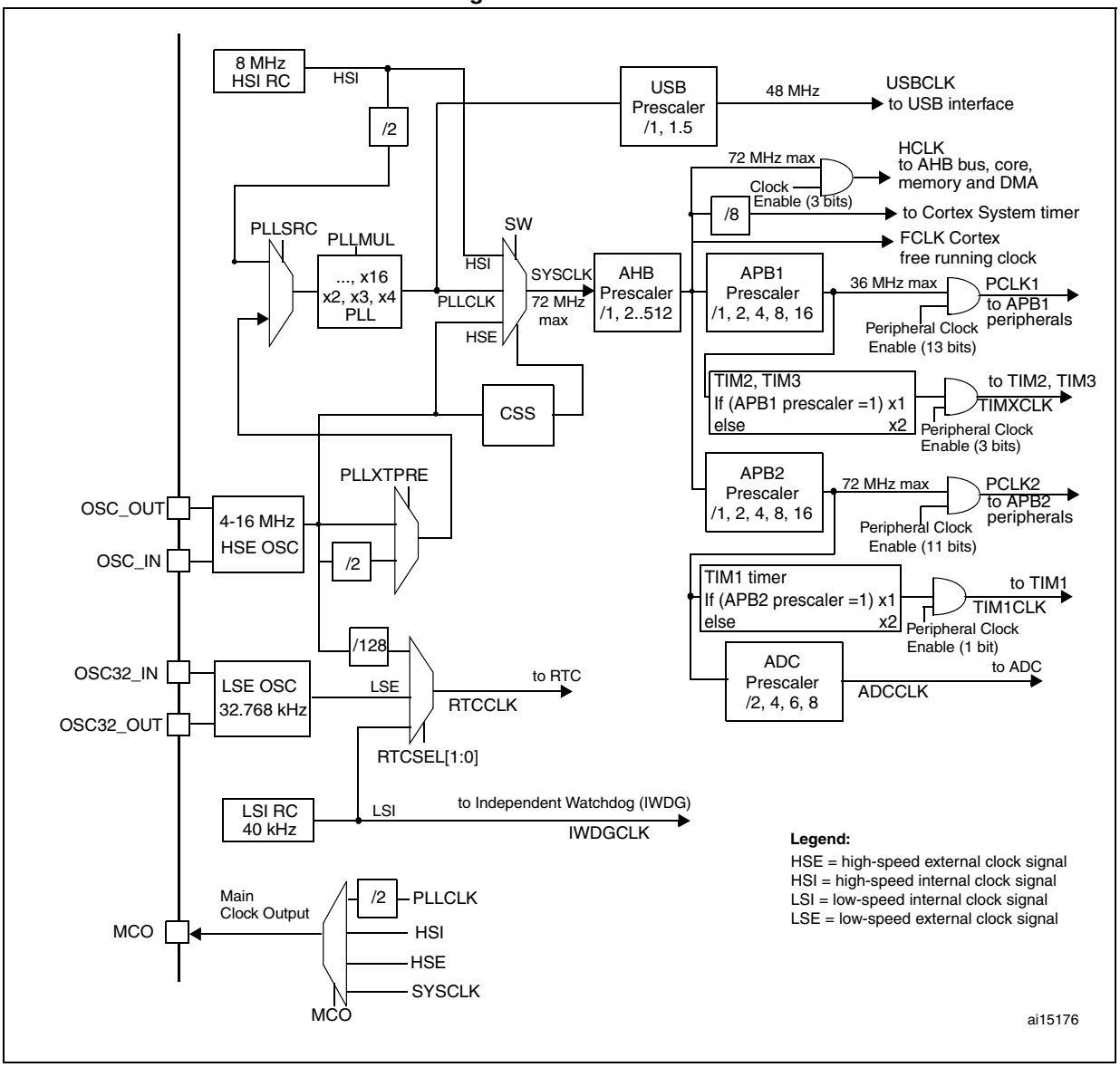

1. When the HSI is used as a PLL clock input, the maximum system clock frequency that can be achieved is 64 MHz.
2. For the USB function to be available, both HSE and PLL must be enabled, with USBCLK running at 48 MHz.
3. To have an ADC conversion time of 1 µs, APB2 must be at 14 MHz, 28 MHz or 56 MHz.

2.2 Full compatibility throughout the family

The STM32F103xx is a complete family whose members are fully pin-to-pin, software and feature compatible. In the reference manual, the STM32F103x4 and STM32F103x6 are identified as low-density devices, the STM32F103x8 and STM32F103xB are referred to as medium-density devices, and the STM32F103xC, STM32F103xD and STM32F103xE are referred to as high-density devices.

Low- and high-density devices are an extension of the STM32F103x8/B devices, they are specified in the STM32F103x4/6 and STM32F103xC/D/E datasheets, respectively. Low-density devices feature lower Flash memory and RAM capacities, less timers and peripherals. High-density devices have higher Flash memory and RAM capacities, and additional peripherals like SDIO, FSMC, I^2S and DAC, while remaining fully compatible with the other members of the STM32F103xx family.

The STM32F103x4, STM32F103x6, STM32F103xC, STM32F103xD and STM32F103xE are a drop-in replacement for STM32F103x8/B medium-density devices, allowing the user to try different memory densities and providing a greater degree of freedom during the development cycle.

Moreover, the STM32F103xx performance line family is fully compatible with all existing STM32F101xx access line and STM32F102xx USB access line devices.

Table 3. STM32F103xx family

<table>
<tr><th rowspan="3">Pinout</th><th colspan="2">Low-density devices</th><th colspan="2">Medium-density devices</th><th colspan="3">High-density devices</th></tr>
<tr><th>16 KB Flash</th><th>32 KB Flash(1)</th><th>64 KB Flash</th><th>128 KB Flash</th><th>256 KB Flash</th><th>384 KB Flash</th><th>512 KB Flash</th></tr>
<tr><th>6 KB RAM</th><th>10 KB RAM</th><th>20 KB RAM</th><th>20 KB RAM</th><th>48 KB RAM</th><th>64 KB RAM</th><th>64 KB RAM</th></tr>
<tr><td>144</td><td>-</td><td>-</td><td>-</td><td>-</td><td colspan="3" rowspan="2">5 × USARTs
4 × 16-bit timers, 2 × basic timers
3 × SPIs, 2 × I^2Ss, 2 × I2Cs
USB, CAN, 2 × PWM timers
3 × ADCs, 2 × DACs, 1 × SDIO
FSMC (100 and 144 pins)</td></tr>
<tr><td>100</td><td>-</td><td>-</td><td colspan="3" rowspan="3">3 × USARTs
3 × 16-bit timers
2 × SPIs, 2 × I^2Cs, USB, CAN, 1 × PWM timer
2 × ADCs</td></tr>
<tr><td>64</td><td colspan="2" rowspan="3">2 × USARTs
2 × 16-bit timers
1 × SPI, 1 × I^2C, USB, CAN, 1 × PWM timer
2 × ADCs</td></tr>
<tr><td>48</td><td>-</td><td>-</td><td>-</td></tr>
<tr><td>36</td><td>-</td><td>-</td><td>-</td></tr>
</table>

1. For orderable part numbers that do not show the A internal code after the temperature range code (6 or 7), the reference datasheet for electrical characteristics is that of the STM32F103x8/B medium-density devices.

2.3 Overview

2.3.1 ARM® Cortex™-M3 core with embedded Flash and SRAM

The ARM® Cortex™-M3 processor is the latest generation of ARM® processors for embedded systems. It has been developed to provide a low-cost platform that meets the needs of MCU implementation, with a reduced pin count and low-power consumption, while delivering outstanding computational performance and an advanced system response to interrupts.

The ARM® Cortex™-M3 32-bit RISC processor features exceptional code-efficiency, delivering the high-performance expected from an ARM core in the memory size usually associated with 8- and 16-bit devices.

The STM32F103xx performance line family having an embedded ARM core, is therefore compatible with all ARM tools and software.

Figure 1 shows the general block diagram of the device family.

2.3.2 Embedded Flash memory

16 or 32 Kbytes of embedded Flash is available for storing programs and data.

2.3.3 CRC (cyclic redundancy check) calculation unit

The CRC (cyclic redundancy check) calculation unit is used to get a CRC code from a 32-bit data word and a fixed generator polynomial.

Among other applications, CRC-based techniques are used to verify data transmission or storage integrity. In the scope of the EN/IEC 60335-1 standard, they offer a means of verifying the Flash memory integrity. The CRC calculation unit helps compute a signature of the software during runtime, to be compared with a reference signature generated at link-time and stored at a given memory location.

2.3.4 Embedded SRAM

Six or ten Kbytes of embedded SRAM accessed (read/write) at CPU clock speed with 0 wait states.

2.3.5 Nested vectored interrupt controller (NVIC)

The STM32F103xx performance line embeds a nested vectored interrupt controller able to handle up to 43 maskable interrupt channels (not including the 16 interrupt lines of Cortex™-M3) and 16 priority levels.

- Closely coupled NVIC gives low-latency interrupt processing
- Interrupt entry vector table address passed directly to the core
- Closely coupled NVIC core interface
- Allows early processing of interrupts
- Processing of *late arriving* higher priority interrupts
- Support for tail-chaining
- Processor state automatically saved
- Interrupt entry restored on interrupt exit with no instruction overhead

This hardware block provides flexible interrupt management features with minimal interrupt latency.

2.3.6 External interrupt/event controller (EXTI)

The external interrupt/event controller consists of 19 edge detector lines used to generate interrupt/event requests. Each line can be independently configured to select the trigger event (rising edge, falling edge, both) and can be masked independently. A pending register maintains the status of the interrupt requests. The EXTI can detect an external line with a pulse width shorter than the Internal APB2 clock period. Up to 51 GPIOs can be connected to the 16 external interrupt lines.

2.3.7 Clocks and startup

System clock selection is performed on startup, however the internal RC 8 MHz oscillator is selected as default CPU clock on reset. An external 4-16 MHz clock can be selected, in which case it is monitored for failure. If failure is detected, the system automatically switches back to the internal RC oscillator. A software interrupt is generated if enabled. Similarly, full interrupt management of the PLL clock entry is available when necessary (for example on failure of an indirectly used external crystal, resonator or oscillator).

Several prescalers allow the configuration of the AHB frequency, the high-speed APB (APB2) and the low-speed APB (APB1) domains. The maximum frequency of the AHB and the high-speed APB domains is 72 MHz. The maximum allowed frequency of the low-speed APB domain is 36 MHz. See *Figure 2* for details on the clock tree.

2.3.8 Boot modes

At startup, boot pins are used to select one of three boot options:

- Boot from User Flash
- Boot from System Memory
- Boot from embedded SRAM

The boot loader is located in System Memory. It is used to reprogram the Flash memory by using USART1. For further details please refer to AN2606.

2.3.9 Power supply schemes

- V_{DD} = 2.0 to 3.6 V: external power supply for I/Os and the internal regulator. Provided externally through V_{DD} pins.
- V_{SSA}, V_{DDA} = 2.0 to 3.6 V: external analog power supplies for ADC, reset blocks, RCs and PLL (minimum voltage to be applied to V_{DDA} is 2.4 V when the ADC is used). V_{DDA} and V_{SSA} must be connected to V_{DD} and V_{SS}, respectively.
- V_{BAT} = 1.8 to 3.6 V: power supply for RTC, external clock 32 kHz oscillator and backup registers (through power switch) when V_{DD} is not present.

For more details on how to connect power pins, refer to *Figure 11: Power supply scheme*.

2.3.10 Power supply supervisor

The device has an integrated power-on reset (POR)/power-down reset (PDR) circuitry. It is always active, and ensures proper operation starting from/down to 2 V. The device remains

in reset mode when V_{DD} is below a specified threshold, $V_{POR/PDR}$, without the need for an external reset circuit.

The device features an embedded programmable voltage detector (PVD) that monitors the V_{DD}/V_{DDA} power supply and compares it to the V_{PVD} threshold. An interrupt can be generated when V_{DD}/V_{DDA} drops below the V_{PVD} threshold and/or when V_{DD}/V_{DDA} is higher than the V_{PVD} threshold. The interrupt service routine can then generate a warning message and/or put the MCU into a safe state. The PVD is enabled by software.

Refer to *Table 11: Embedded reset and power control block characteristics* for the values of $V_{POR/PDR}$ and V_{PVD}.

2.3.11 Voltage regulator

The regulator has three operation modes: main (MR), low power (LPR) and power down.

- MR is used in the nominal regulation mode (Run)
- LPR is used in the Stop mode
- Power down is used in Standby mode: the regulator output is in high impedance: the kernel circuitry is powered down, inducing zero consumption (but the contents of the registers and SRAM are lost)

This regulator is always enabled after reset. It is disabled in Standby mode, providing high impedance output.

2.3.12 Low-power modes

The STM32F103xx performance line supports three low-power modes to achieve the best compromise between low power consumption, short startup time and available wakeup sources:

- **Sleep** mode

  In Sleep mode, only the CPU is stopped. All peripherals continue to operate and can wake up the CPU when an interrupt/event occurs.

- **Stop** mode

  The Stop mode achieves the lowest power consumption while retaining the content of SRAM and registers. All clocks in the 1.8 V domain are stopped, the PLL, the HSI RC and the HSE crystal oscillators are disabled. The voltage regulator can also be put either in normal or in low power mode.
  The device can be woken up from Stop mode by any of the EXTI line. The EXTI line source can be one of the 16 external lines, the PVD output, the RTC alarm or the USB wakeup.

- **Standby** mode

  The Standby mode is used to achieve the lowest power consumption. The internal voltage regulator is switched off so that the entire 1.8 V domain is powered off. The PLL, the HSI RC and the HSE crystal oscillators are also switched off. After entering Standby mode, SRAM and register contents are lost except for registers in the Backup domain and Standby circuitry.

  The device exits Standby mode when an external reset (NRST pin), an IWDG reset, a rising edge on the WKUP pin, or an RTC alarm occurs.

Note: The RTC, the IWDG, and the corresponding clock sources are not stopped by entering Stop or Standby mode.

2.3.13 DMA

The flexible 7-channel general-purpose DMA is able to manage memory-to-memory, peripheral-to-memory and memory-to-peripheral transfers. The DMA controller supports circular buffer management avoiding the generation of interrupts when the controller reaches the end of the buffer.

Each channel is connected to dedicated hardware DMA requests, with support for software trigger on each channel. Configuration is made by software and transfer sizes between source and destination are independent.

The DMA can be used with the main peripherals: SPI, I^2C, USART, general-purpose and advanced-control timers TIMx and ADC.

2.3.14 RTC (real-time clock) and backup registers

The RTC and the backup registers are supplied through a switch that takes power either on V_{DD} supply when present or through the V_{BAT} pin. The backup registers are ten 16-bit registers used to store 20 bytes of user application data when V_{DD} power is not present.

The real-time clock provides a set of continuously running counters which can be used with suitable software to provide a clock calendar function, and provides an alarm interrupt and a periodic interrupt. It is clocked by a 32.768 kHz external crystal, resonator or oscillator, the internal low-power RC oscillator or the high-speed external clock divided by 128. The internal low-power RC has a typical frequency of 40 kHz. The RTC can be calibrated using an external 512 Hz output to compensate for any natural crystal deviation. The RTC features a 32-bit programmable counter for long-term measurement using the Compare register to generate an alarm. A 20-bit prescaler is used for the time base clock and is by default configured to generate a time base of 1 second from a clock at 32.768 kHz.

2.3.15 Timers and watchdogs

The low-density STM32F103xx performance line devices include an advanced-control timer, two general-purpose timers, two watchdog timers and a SysTick timer.

Table 4 compares the features of the advanced-control and general-purpose timers.

Table 4. Timer feature comparison

Timer	Counter resolution	Counter type	Prescaler factor	DMA request generation	Capture/compare channels	Complementary outputs
TIM1	16-bit	Up, down, up/down	Any integer between 1 and 65536	Yes	4	Yes
TIM2, TIM3	16-bit	Up, down, up/down	Any integer between 1 and 65536	Yes	4	No

Advanced-control timer (TIM1)

The advanced-control timer (TIM1) can be seen as a three-phase PWM multiplexed on 6 channels. It has complementary PWM outputs with programmable inserted dead-times. It can also be seen as a complete general-purpose timer. The 4 independent channels can be used for

- Input capture
- Output compare
- PWM generation (edge- or center-aligned modes)
- One-pulse mode output

If configured as a general-purpose 16-bit timer, it has the same features as the TIMx timer. If configured as the 16-bit PWM generator, it has full modulation capability (0-100%).

In debug mode, the advanced-control timer counter can be frozen and the PWM outputs disabled to turn off any power switch driven by these outputs.

Many features are shared with those of the general-purpose TIM timers which have the same architecture. The advanced-control timer can therefore work together with the TIM timers via the Timer Link feature for synchronization or event chaining.

General-purpose timers (TIMx)

There are up to two synchronizable general-purpose timers embedded in the STM32F103xx performance line devices. These timers are based on a 16-bit auto-reload up/down counter, a 16-bit prescaler and feature 4 independent channels each for input capture/output compare, PWM or one-pulse mode output. This gives up to 12 input captures/output compares/PWMs on the largest packages.
The general-purpose timers can work together with the advanced-control timer via the Timer Link feature for synchronization or event chaining. Their counter can be frozen in debug mode. Any of the general-purpose timers can be used to generate PWM outputs. They all have independent DMA request generation.

These timers are capable of handling quadrature (incremental) encoder signals and the digital outputs from 1 to 3 hall-effect sensors.

Independent watchdog

The independent watchdog is based on a 12-bit downcounter and 8-bit prescaler. It is clocked from an independent 40 kHz internal RC and as it operates independently of the main clock, it can operate in Stop and Standby modes. It can be used either as a watchdog to reset the device when a problem occurs, or as a free-running timer for application timeout management. It is hardware- or software-configurable through the option bytes. The counter can be frozen in debug mode.

Window watchdog

The window watchdog is based on a 7-bit downcounter that can be set as free-running. It can be used as a watchdog to reset the device when a problem occurs. It is clocked from the main clock. It has an early warning interrupt capability and the counter can be frozen in debug mode.

SysTick timer

This timer is dedicated for OS, but could also be used as a standard downcounter. It features:

- A 24-bit downcounter
- Autoreload capability
- Maskable system interrupt generation when the counter reaches 0
- Programmable clock source

2.3.16 I²C bus

The I²C bus interface can operate in multimaster and slave modes. It can support standard and fast modes.

It supports dual slave addressing (7-bit only) and both 7/10-bit addressing in master mode. A hardware CRC generation/verification is embedded.

It can be served by DMA and they support SM Bus 2.0/PM Bus.

2.3.17 Universal synchronous/asynchronous receiver transmitter (USART)

One of the USART interfaces is able to communicate at speeds of up to 4.5 Mbit/s. The other available interface communicates at up to 2.25 Mbit/s. They provide hardware management of the CTS and RTS signals, IrDA SIR ENDEC support, are ISO 7816 compliant and have LIN Master/Slave capability.

All USART interfaces can be served by the DMA controller.

2.3.18 Serial peripheral interface (SPI)

The SPI interface is able to communicate up to 18 Mbits/s in slave and master modes in full-duplex and simplex communication modes. The 3-bit prescaler gives 8 master mode frequencies and the frame is configurable to 8 bits or 16 bits. The hardware CRC generation/verification supports basic SD Card/MMC modes.

The SPI interface can be served by the DMA controller.

2.3.19 Controller area network (CAN)

The CAN is compliant with specifications 2.0A and B (active) with a bit rate up to 1 Mbit/s. It can receive and transmit standard frames with 11-bit identifiers as well as extended frames with 29-bit identifiers. It has three transmit mailboxes, two receive FIFOs with 3 stages and 14 scalable filter banks.

2.3.20 Universal serial bus (USB)

The STM32F103xx performance line embeds a USB device peripheral compatible with the USB full-speed 12 Mbs. The USB interface implements a full-speed (12 Mbit/s) function interface. It has software-configurable endpoint setting and suspend/resume support. The dedicated 48 MHz clock is generated from the internal main PLL (the clock source must use a HSE crystal oscillator).

2.3.21 GPIOs (general-purpose inputs/outputs)

Each of the GPIO pins can be configured by software as output (push-pull or open-drain), as input (with or without pull-up or pull-down) or as peripheral alternate function. Most of the GPIO pins are shared with digital or analog alternate functions. All GPIOs are high current-capable.

The I/Os alternate function configuration can be locked if needed following a specific sequence in order to avoid spurious writing to the I/Os registers.

I/Os on APB2 with up to 18 MHz toggling speed.

2.3.22 ADC (analog-to-digital converter)

Two 12-bit analog-to-digital converters are embedded into STM32F103xx performance line devices and each ADC shares up to 16 external channels, performing conversions in single-shot or scan modes. In scan mode, automatic conversion is performed on a selected group of analog inputs.

Additional logic functions embedded in the ADC interface allow:

- Simultaneous sample and hold
- Interleaved sample and hold
- Single shunt

The ADC can be served by the DMA controller.

An analog watchdog feature allows very precise monitoring of the converted voltage of one, some or all selected channels. An interrupt is generated when the converted voltage is outside the programmed thresholds.

The events generated by the general-purpose timers (TIMx) and the advanced-control timer (TIM1) can be internally connected to the ADC start trigger, injection trigger, and DMA trigger respectively, to allow the application to synchronize A/D conversion and timers.

2.3.23 Temperature sensor

The temperature sensor has to generate a voltage that varies linearly with temperature. The conversion range is between 2 V < V_{DDA} < 3.6 V. The temperature sensor is internally connected to the ADC12_IN16 input channel which is used to convert the sensor output voltage into a digital value.

2.3.24 Serial wire JTAG debug port (SWJ-DP)

The ARM SWJ-DP Interface is embedded. and is a combined JTAG and serial wire debug port that enables either a serial wire debug or a JTAG probe to be connected to the target. The JTAG TMS and TCK pins are shared with SWDIO and SWCLK, respectively, and a specific sequence on the TMS pin is used to switch between JTAG-DP and SW-DP.

3 Pinouts and pin description

Figure 3. STM32F103xx performance line LQFP64 pinout

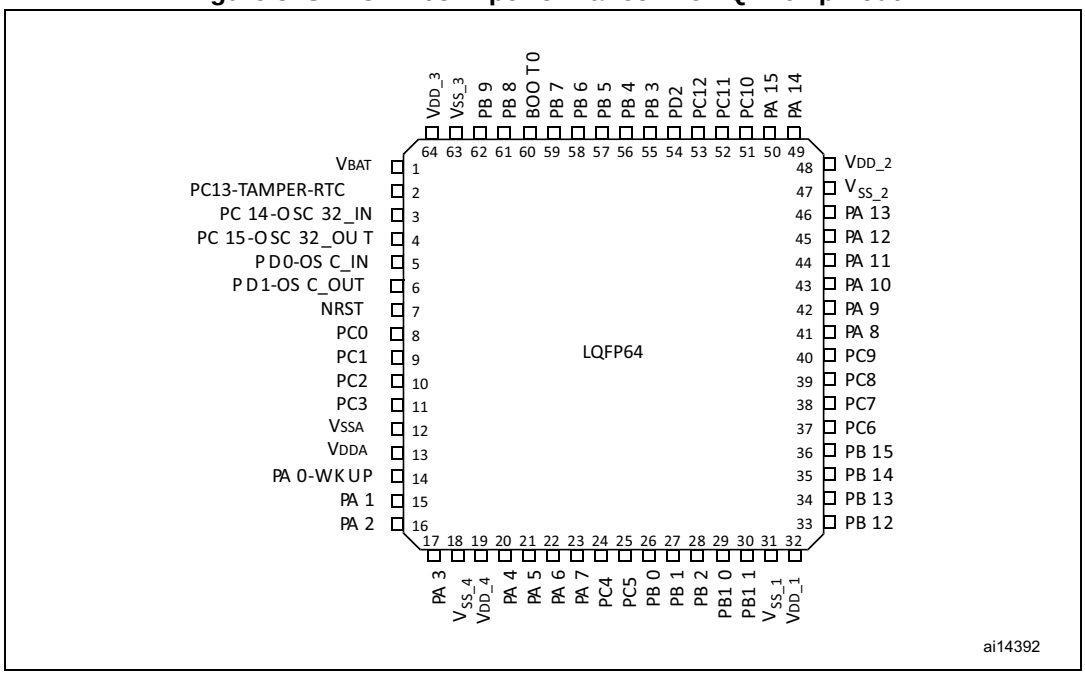

Figure 4. STM32F103xx performance line TFBGA64 ballout

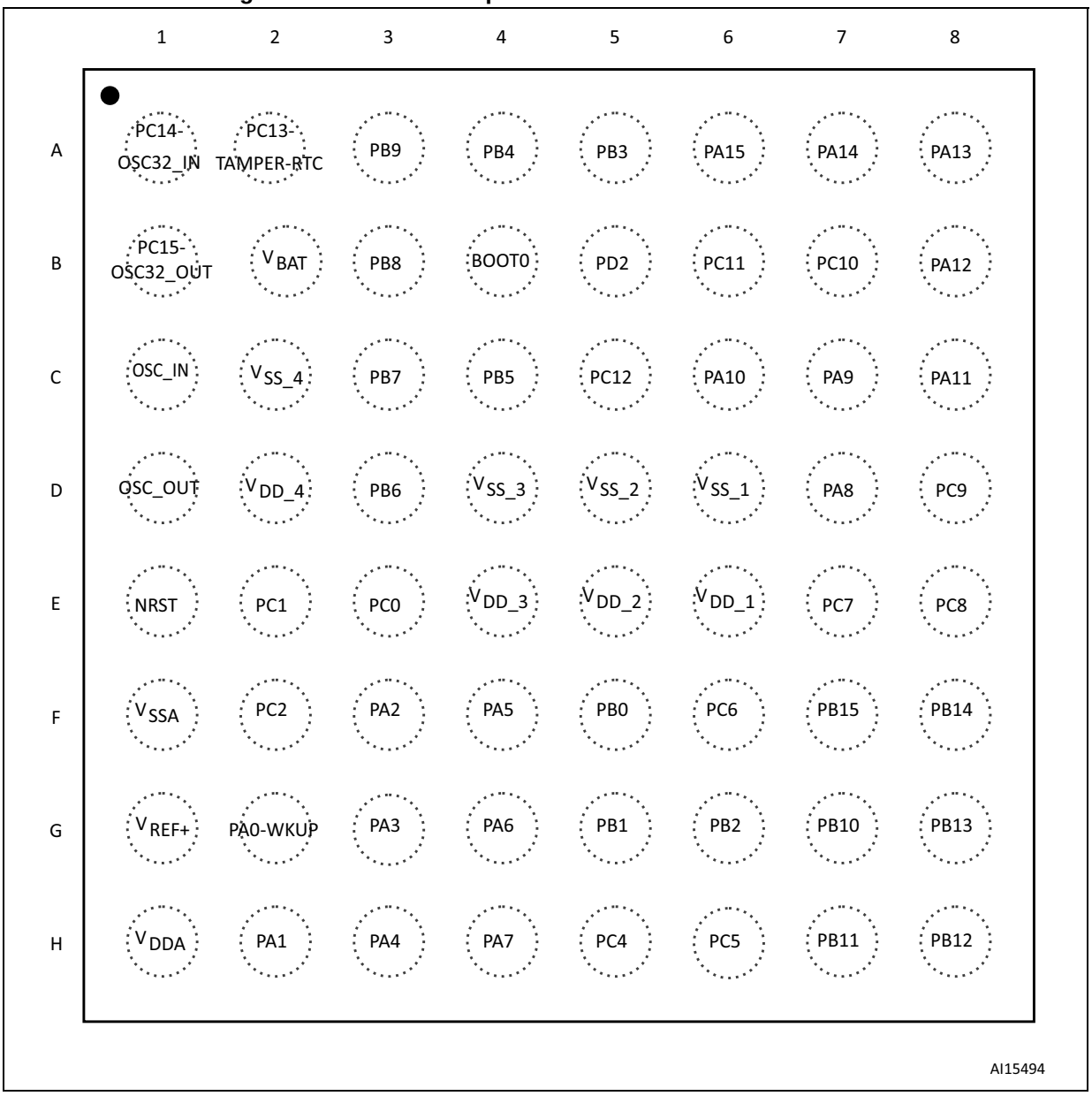

Figure 5. STM32F103xx performance line LQFP48 pinout

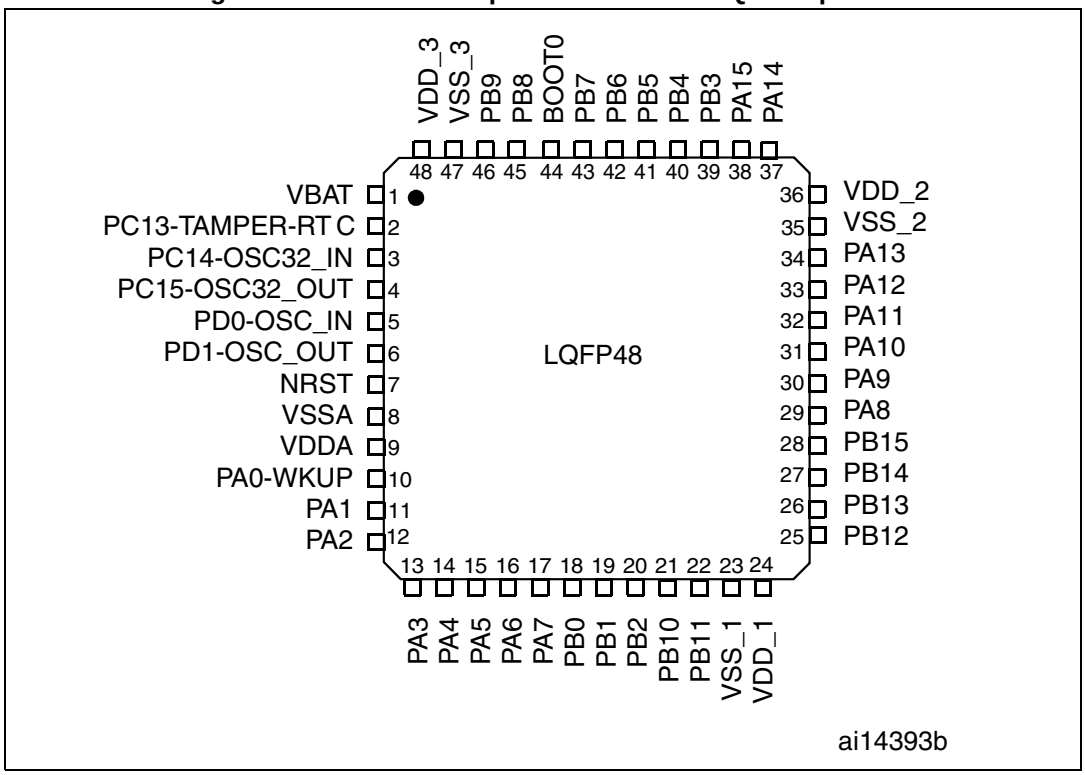

Figure 6. STM32F103xx performance line UFQFPN48 pinout

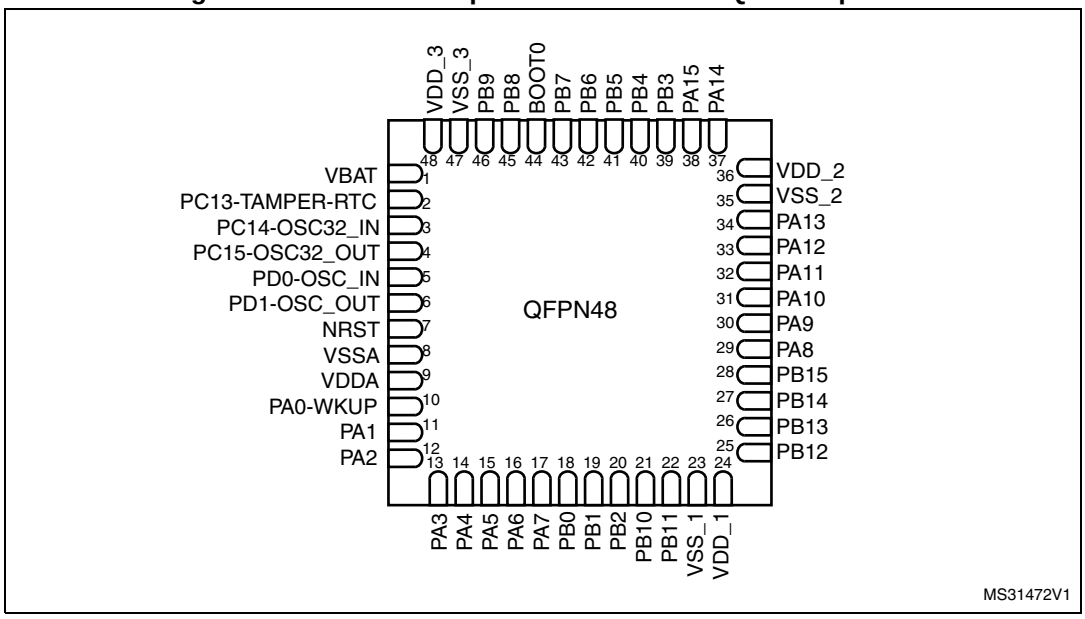

Figure 7. STM32F103xx performance line VFQFPN36 pinout

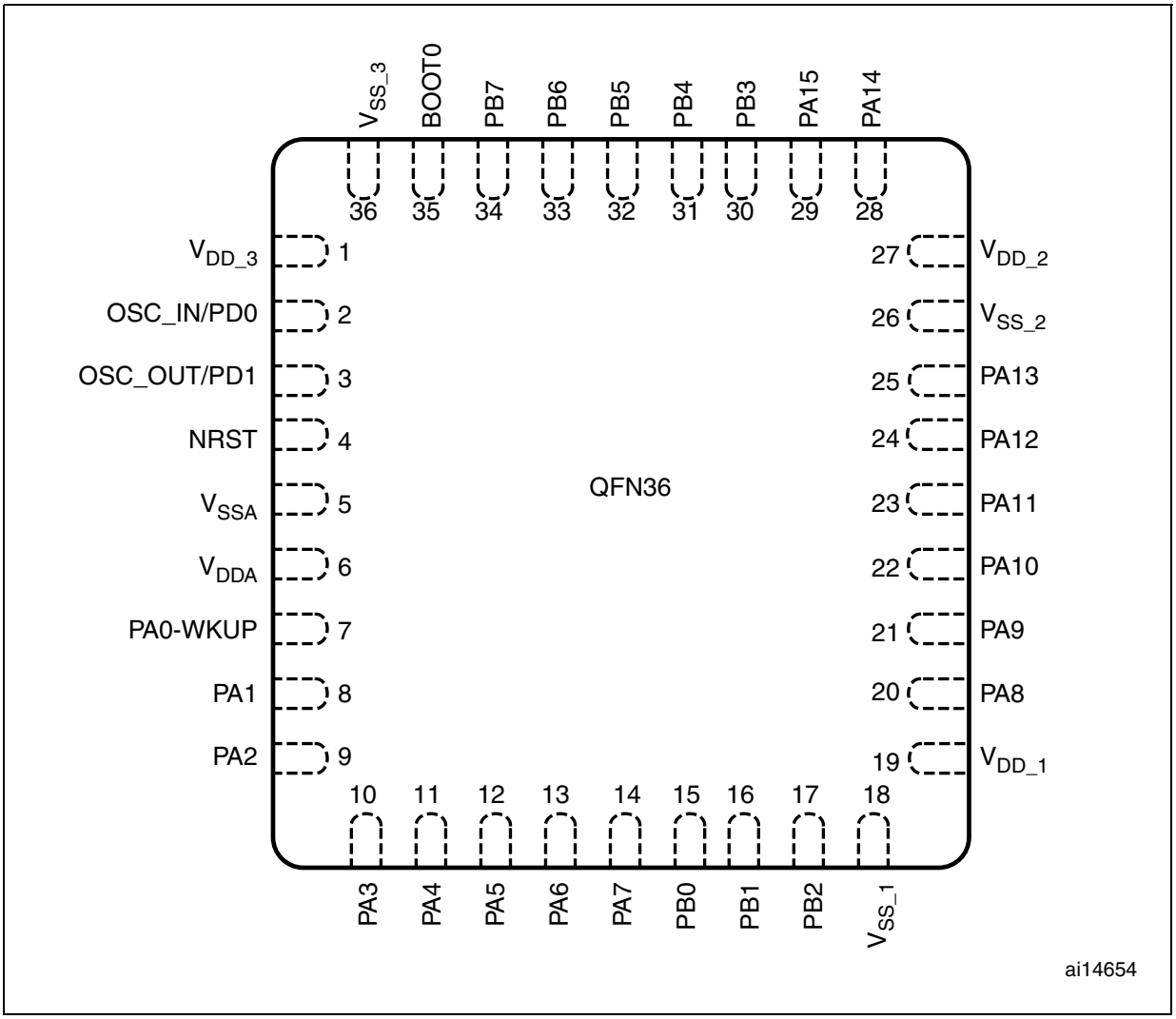

Table 5. Low-density STM32F103xx pin definitions

Pins				Pin name	Type[1]	I / O Level[2]	Main function[3] (after reset)	Alternate functions[4]	
LQFP48/ UFQFPN48	LQFP64	TFBGA64	VFQFPN36					Default	Remap
1	1	B2	-	V_{BAT}	S	-	V_{BAT}	-	-
2	2	A2	-	PC13-TAMPER-RTC[5]	I/O	-	PC13[6]	TAMPER-RTC	-
3	3	A1	-	PC14-OSC32_IN[5]	I/O	-	PC14[6]	OSC32_IN	-
4	4	B1	-	PC15-OSC32_OUT[5]	I/O	-	PC15[6]	OSC32_OUT	-
5	5	C1	2	OSC_IN	I	-	OSC_IN	-	PD0[7]
6	6	D1	3	OSC_OUT	O	-	OSC_OUT	-	PD1[7]
7	7	E1	4	NRST	I/O	-	NRST		-
-	8	E3	-	PC0	I/O	-	PC0	ADC12_IN10	-
-	9	E2	-	PC1	I/O	-	PC1	ADC12_IN11	-
-	10	F2	-	PC2	I/O	-	PC2	ADC12_IN12	-
-	11	-	-	PC3	I/O	-	PC3	ADC12_IN13	-
-	-	G1	-	V_{REF+}[8]	S	-	V_{REF+}	-	-
8	12	F1	5	V_{SSA}	S	-	V_{SSA}	-	-
9	13	H1	6	V_{DDA}	S	-	V_{DDA}	-	-
10	14	G2	7	PA0-WKUP	I/O	-	PA0	WKUP/USART2_CTS/ ADC12_IN0/ TIM2_CH1_ETR[9]	-
11	15	H2	8	PA1	I/O	-	PA1	USART2_RTS/ ADC12_IN1/ TIM2_CH2[9]	-
12	16	F3	9	PA2	I/O	-	PA2	USART2_TX/ ADC12_IN2/ TIM2_CH3[9]	-
13	17	G3	10	PA3	I/O	-	PA3	USART2_RX/ ADC12_IN3/TIM2_CH4[9]	-
-	18	C2	-	V_{SS_4}	S	-	V_{SS_4}	-	-
-	19	D2	-	V_{DD_4}	S	-	V_{DD_4}	-	-
14	20	H3	11	PA4	I/O	-	PA4	SPI1_NSS[9]/ USART2_CK/ADC12_IN4	-
15	21	F4	12	PA5	I/O	-	PA5	SPI1_SCK[9]/ ADC12_IN5	-
16	22	G4	13	PA6	I/O	-	PA6	SPI1_MISO[9]/ ADC12_IN6/TIM3_CH1[9]	TIM1_BKIN
17	23	H4	14	PA7	I/O	-	PA7	SPI1_MOSI[9]/ ADC12_IN7/TIM3_CH2[9]	TIM1_CH1N
-	24	H5	-	PC4	I/O	-	PC4	ADC12_IN14	-
-	25	H6	-	PC5	I/O	-	PC5	ADC12_IN15	-

Table 5. Low-density STM32F103xx pin definitions (continued)

Pins				Pin name	Type(1)	I / O Level(2)	Main function(3) (after reset)	Alternate functions(4)	
LQFP48/ UFQFPN48	LQFP64	TFBGA64	VFQFPN36					Default	Remap
18	26	F5	15	PB0	I/O	-	PB0	ADC12_IN8/TIM3_CH3(9)	TIM1_CH2N
19	27	G5	16	PB1	I/O	-	PB1	ADC12_IN9/TIM3_CH4(9)	TIM1_CH3N
20	28	G6	17	PB2	I/O	FT	PB2/BOOT1	-	-
21	29	G7	-	PB10	I/O	FT	PB10	-	TIM2_CH3
22	30	H7	-	PB11	I/O	FT	PB11	-	TIM2_CH4
23	31	D6	18	V_{SS_1}	S	-	V_{SS_1}	-	-
24	32	E6	19	V_{DD_1}	S	-	V_{DD_1}	-	-
25	33	H8	-	PB12	I/O	FT	PB12	TIM1_BKIN(9)	-
26	34	G8	-	PB13	I/O	FT	PB13	TIM1_CH1N (9)	-
27	35	F8	-	PB14	I/O	FT	PB14	TIM1_CH2N (9)	-
28	36	F7	-	PB15	I/O	FT	PB15	TIM1_CH3N(9)	-
-	37	F6	-	PC6	I/O	FT	PC6	-	TIM3_CH1
-	38	E7	-	PC7	I/O	FT	PC7	-	TIM3_CH2
-	39	E8	-	PC8	I/O	FT	PC8	-	TIM3_CH3
-	40	D8	-	PC9	I/O	FT	PC9	-	TIM3_CH4
29	41	D7	20	PA8	I/O	FT	PA8	USART1_CK/ TIM1_CH1/MCO	-
30	42	C7	21	PA9	I/O	FT	PA9	USART1_TX(9)/ TIM1_CH2(9)	-
31	43	C6	22	PA10	I/O	FT	PA10	USART1_RX(9)/ TIM1_CH3	-
32	44	C8	23	PA11	I/O	FT	PA11	USART1_CTS/ CAN_RX(9)/ TIM1_CH4 / USBDM	-
33	45	B8	24	PA12	I/O	FT	PA12	USART1_RTS/ CAN_TX(9) / TIM1_ETR / USBDP	-
34	46	A8	25	PA13	I/O	FT	JTMS/SWDIO		PA13
35	47	D5	26	V_{SS_2}	S	-	V_{SS_2}	-	-
36	48	E5	27	V_{DD_2}	S	-	V_{DD_2}	-	-
37	49	A7	28	PA14	I/O	FT	JTCK/SWCLK	-	PA14
38	50	A6	29	PA15	I/O	FT	JTDI	-	TIM2_CH1_ETR/ PA15 / SPI1_NSS
-	51	B7	-	PC10	I/O	FT	PC10	-	-
-	52	B6	-	PC11	I/O	FT	PC11	-	-
-	53	C5	-	PC12	I/O	FT	PC12	-	-
-	-	C1	2	PD0	I/O	FT	PD0	-	-

Table 5. Low-density STM32F103xx pin definitions (continued)

Pins				Pin name	Type[1]	I / O Level[2]	Main function[3] (after reset)	Alternate functions[4]	
LQFP48/ UFQFPN48	LQFP64	TFBGA64	VFQFPN36					Default	Remap
-	-	D1	3	PD1	I/O	FT	PD1	-	-
-	54	B5	-	PD2	I/O	FT	PD2	TIM3_ETR	-
39	55	A5	30	PB3	I/O	FT	JTDO	-	TIM2_CH2 / PB3/ TRACESWO
40	56	A4	31	PB4	I/O	FT	NJTRST	-	TIM3_CH1 /PB4 SPI1_MISO
41	57	C4	32	PB5	I/O	-	PB5	I2C1_SMBA	TIM3_CH2 / SPI1_MOSI
42	58	D3	33	PB6	I/O	FT	PB6	I2C1_SCL[9]/	USART1_TX
43	59	C3	34	PB7	I/O	FT	PB7	I2C1_SDA[9]	USART1_RX
44	60	B4	35	BOOT0	I	-	BOOT0	-	-
45	61	B3	-	PB8	I/O	FT	PB8	-	I2C1_SCL /CAN_RX
46	62	A3	-	PB9	I/O	FT	PB9	-	I2C1_SDA / CAN_TX
47	63	D4	36	V_{SS_3}	S	-	V_{SS_3}	-	-
48	64	E4	1	V_{DD_3}	S	-	V_{DD_3}	-	-

1. I = input, O = output, S = supply.
2. FT = 5 V tolerant.
3. Function availability depends on the chosen device. For devices having reduced peripheral counts, it is always the lower number of peripheral that is included. For example, if a device has only one SPI and two USARTs, they will be called SPI1 and USART1 & USART2, respectively. Refer to *Table 2 on page 11*.
4. If several peripherals share the same I/O pin, to avoid conflict between these alternate functions only one peripheral should be enabled at a time through the peripheral clock enable bit (in the corresponding RCC peripheral clock enable register).
5. PC13, PC14 and PC15 are supplied through the power switch. Since the switch only sinks a limited amount of current (3 mA), the use of GPIOs PC13 to PC15 in output mode is limited: the speed should not exceed 2 MHz with a maximum load of 30 pF and these IOs must not be used as a current source (e.g. to drive an LED).
6. Main function after the first backup domain power-up. Later on, it depends on the contents of the Backup registers even after reset (because these registers are not reset by the main reset). For details on how to manage these IOs, refer to the Battery backup domain and BKP register description sections in the STM32F10xxx reference manual, available from the STMicroelectronics website: www.st.com.
7. The pins number 2 and 3 in the VFQFPN36 package, 5 and 6 in the LQFP48, UFQFPN48 and LQFP64 packages and C1 and C2 in the TFBGA64 package are configured as OSC_IN/OSC_OUT after reset, however the functionality of PD0 and PD1 can be remapped by software on these pins. For more details, refer to the Alternate function I/O and debug configuration section in the STM32F10xxx reference manual.
8. Unlike in the LQFP64 package, there is no PC3 in the TFBGA64 package. The V_{REF+} functionality is provided instead.
9. This alternate function can be remapped by software to some other port pins (if available on the used package). For more details, refer to the Alternate function I/O and debug configuration section in the STM32F10xxx reference manual, available from the STMicroelectronics website: www.st.com.

4 Memory mapping

The memory map is shown in *Figure 8*.

Figure 8. Memory map

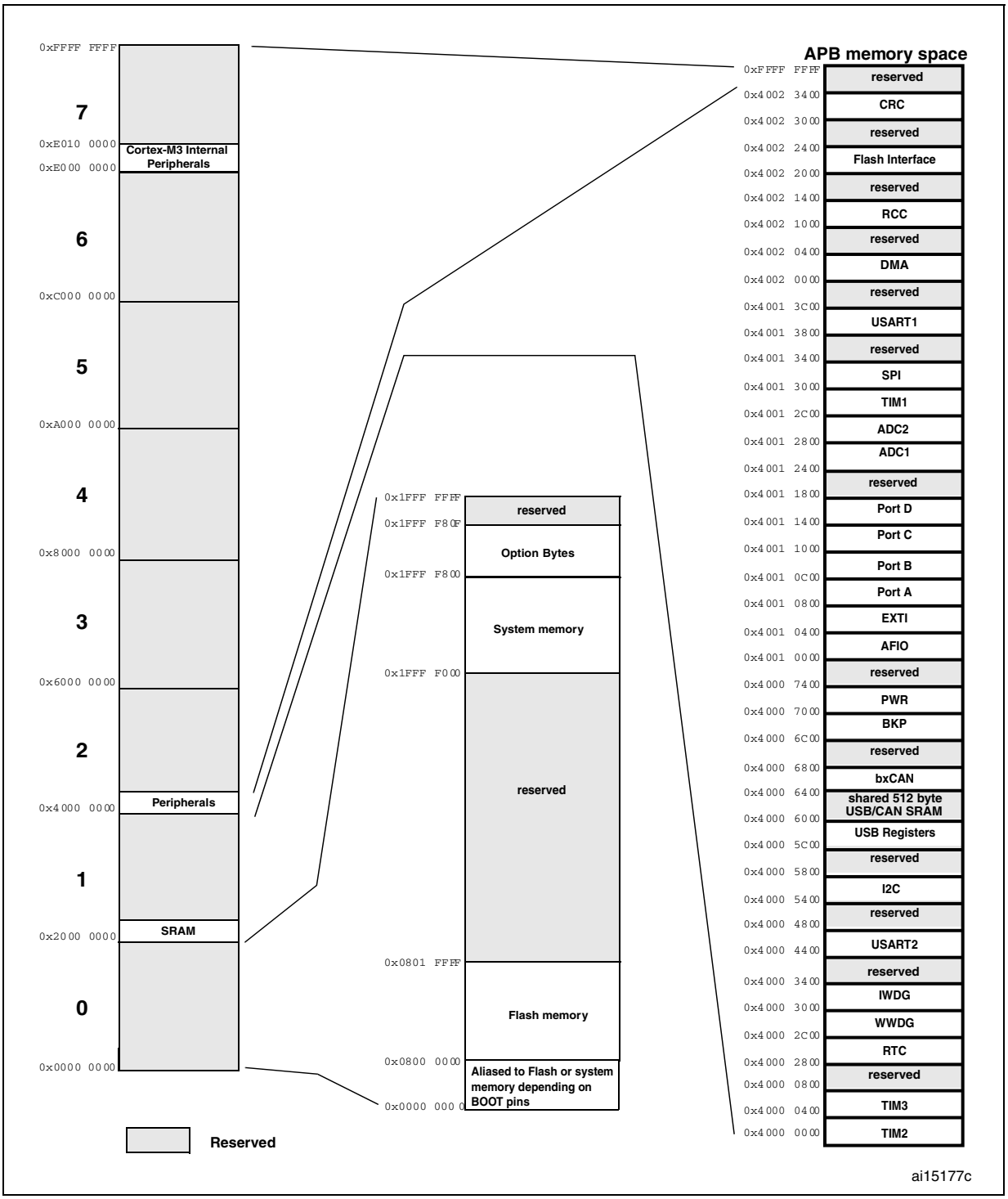

5 Electrical characteristics

5.1 Parameter conditions

Unless otherwise specified, all voltages are referenced to V_{SS}.

5.1.1 Minimum and maximum values

Unless otherwise specified the minimum and maximum values are guaranteed in the worst conditions of ambient temperature, supply voltage and frequencies by tests in production on 100% of the devices with an ambient temperature at T_A = 25 °C and T_A = $T_A$max (given by the selected temperature range).

Data based on characterization results, design simulation and/or technology characteristics are indicated in the table footnotes and are not tested in production. Based on characterization, the minimum and maximum values refer to sample tests and represent the mean value plus or minus three times the standard deviation (mean±3σ).

5.1.2 Typical values

Unless otherwise specified, typical data are based on T_A = 25 °C, V_{DD} = 3.3 V (for the 2 V ≤ V_{DD} ≤ 3.6 V voltage range). They are given only as design guidelines and are not tested.

Typical ADC accuracy values are determined by characterization of a batch of samples from a standard diffusion lot over the full temperature range, where 95% of the devices have an error less than or equal to the value indicated (mean±2σ).

5.1.3 Typical curves

Unless otherwise specified, all typical curves are given only as design guidelines and are not tested.

5.1.4 Loading capacitor

The loading conditions used for pin parameter measurement are shown in *Figure 9*.

5.1.5 Pin input voltage

The input voltage measurement on a pin of the device is described in *Figure 10*.

Figure 9. Pin loading conditions

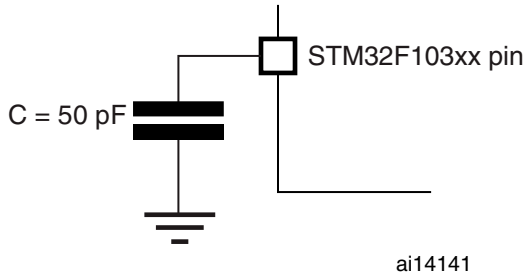

Figure 10. Pin input voltage

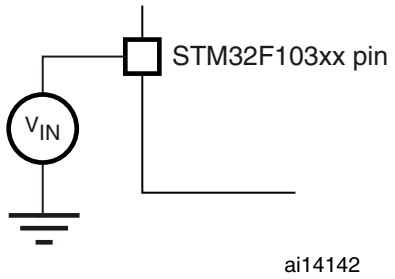

5.1.6 Power supply scheme

Figure 11. Power supply scheme

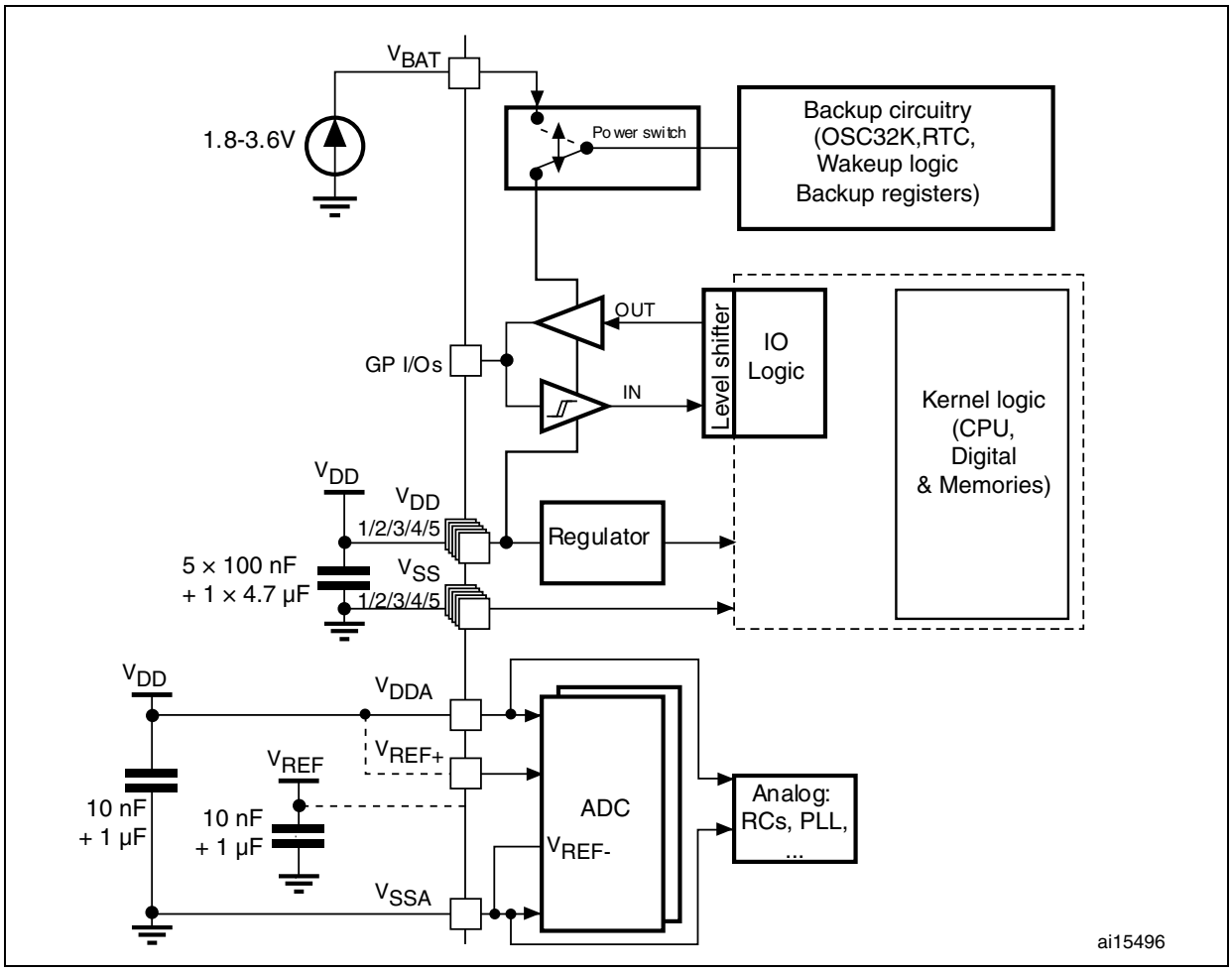

Caution: In *Figure 11*, the 4.7 µF capacitor must be connected to V_{DD3}.

5.1.7 Current consumption measurement

Figure 12. Current consumption measurement scheme

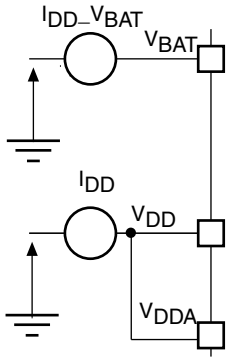

5.2 Absolute maximum ratings

Stresses above the absolute maximum ratings listed in *Table 6: Voltage characteristics*, *Table 7: Current characteristics*, and *Table 8: Thermal characteristics* may cause permanent damage to the device. These are stress ratings only and functional operation of the device at these conditions is not implied. Exposure to maximum rating conditions for extended periods may affect device reliability.

Table 6. Voltage characteristics

Symbol	Ratings	Min	Max	Unit
$V_{DD} - V_{SS}$	External main supply voltage (including V_{DDA} and V_{DD})(1)	–0.3	4.0	V
V_{IN}(2)	Input voltage on five volt tolerant pin	V_{SS} –0.3	V_{DD} +4.0	
	Input voltage on any other pin	V_{SS} –0.3	4.0	
$\|\Delta V_{DDx}\|$	Variations between different V_{DD} power pins	-	50	mV
$\|V_{SSX} - V_{SS}\|$	Variations between all the different ground pins	-	50	
$V_{ESD(HBM)}$	Electrostatic discharge voltage (human body model)	see *Section 5.3.11: Absolute maximum ratings (electrical sensitivity)*		-

1. All main power (V_{DD}, V_{DDA}) and ground (V_{SS}, V_{SSA}) pins must always be connected to the external power supply, in the permitted range.
2. V_{IN} maximum must always be respected. Refer to *Table 7: Current characteristics* for the maximum allowed injected current values.

Table 7. Current characteristics

Symbol	Ratings	Max.	Unit
I_{VDD}	Total current into V_{DD}/V_{DDA} power lines (source)(1)	150	mA
I_{VSS}	Total current out of V_{SS} ground lines (sink)(1)	150	
I_{IO}	Output current sunk by any I/O and control pin	25	
	Output current source by any I/Os and control pin	–25	
$I_{INJ(PIN)}$(2)	Injected current on five volt tolerant pins(3)	-5/+0	
	Injected current on any other pin(4)	± 5	
$\Sigma I_{INJ(PIN)}$	Total injected current (sum of all I/O and control pins)(5)	± 25	

1. All main power (V_{DD}, V_{DDA}) and ground (V_{SS}, V_{SSA}) pins must always be connected to the external power supply, in the permitted range.
2. Negative injection disturbs the analog performance of the device. See note *2. on page 71*.
3. Positive injection is not possible on these I/Os. A negative injection is induced by $V_{IN}<V_{SS}$. $I_{INJ(PIN)}$ must never be exceeded. Refer to *Table 6: Voltage characteristics* for the maximum allowed input voltage values.
4. A positive injection is induced by $V_{IN}>V_{DD}$ while a negative injection is induced by $V_{IN}<V_{SS}$. $I_{INJ(PIN)}$ must never be exceeded. Refer to *Table 6: Voltage characteristics* for the maximum allowed input voltage values.
5. When several inputs are submitted to a current injection, the maximum $\Sigma I_{INJ(PIN)}$ is the absolute sum of the positive and negative injected currents (instantaneous values).

Table 8. Thermal characteristics

Symbol	Ratings	Value	Unit
T_{STG}	Storage temperature range	–65 to +150	°C
T_J	Maximum junction temperature	150	°C

5.3 Operating conditions

5.3.1 General operating conditions

Table 9. General operating conditions

Symbol	Parameter	Conditions	Min	Max	Unit
f_{HCLK}	Internal AHB clock frequency	-	0	72	MHz
f_{PCLK1}	Internal APB1 clock frequency	-	0	36	
f_{PCLK2}	Internal APB2 clock frequency	-	0	72	
V_{DD}	Standard operating voltage	-	2	3.6	V
V_{DDA}(1)	Analog operating voltage (ADC not used)	Must be the same potential as V_{DD}(2)	2	3.6	
	Analog operating voltage (ADC used)		2.4	3.6	
V_{BAT}	Backup operating voltage	-	1.8	3.6	

Table 9. General operating conditions (continued)

Symbol	Parameter	Conditions		Min	Max	Unit
V_{IN}	I/O input voltage	Standard IO		–0.3	V_{DD}+ 0.3	V
		FT IO(3)	2 V < V_{DD} ≤ 3.6 V	–0.3	5.5	
			V_{DD} = 2 V	–0.3	5.2	
		BOOT0		0	5.5	
P_D	Power dissipation at T_A = 85 °C for suffix 6 or T_A = 105 °C for suffix 7(4)	TFBGA64		-	308	mW
		LQFP64		-	444	
		LQFP48		-	363	
		UFQFPN48		-	624	
		VFQFPN36		-	1000	
T_A	Ambient temperature for 6 suffix version	Maximum power dissipation		–40	85	°C
		Low power dissipation(5)		–40	105	
	Ambient temperature for 7 suffix version	Maximum power dissipation		–40	105	
		Low power dissipation(5)		–40	125	
T_J	Junction temperature range	6 suffix version		–40	105	
		7 suffix version		–40	125	

1. When the ADC is used, refer to *Table 46: ADC characteristics*.
2. It is recommended to power V_{DD} and V_{DDA} from the same source. A maximum difference of 300 mV between V_{DD} and V_{DDA} can be tolerated during power-up and operation.
3. To sustain a voltage higher than V_{DD}+0.3 V, the internal pull-up/pull-down resistors must be disabled.
4. If T_A is lower, higher P_D values are allowed as long as T_J does not exceed $T_J$max (see *Table 6.6: Thermal characteristics on page 92*).
5. In low power dissipation state, T_A can be extended to this range as long as T_J does not exceed $T_J$max (see *Table 6.6: Thermal characteristics on page 92*).

5.3.2 Operating conditions at power-up / power-down

Subject to general operating conditions for T_A.

Table 10. Operating conditions at power-up / power-down

Symbol	Parameter	Conditions	Min	Max	Unit
t_{VDD}	V_{DD} rise time rate	-	0	¥	µs/V
	V_{DD} fall time rate		20	¥	

5.3.3 Embedded reset and power control block characteristics

The parameters given in *Table 11* are derived from tests performed under ambient temperature and V_{DD} supply voltage conditions summarized in *Table 9*.

Table 11. Embedded reset and power control block characteristics

Symbol	Parameter	Conditions	Min	Typ	Max	Unit
V_{PVD}	Programmable voltage detector level selection	PLS[2:0]=000 (rising edge)	2.1	2.18	2.26	V
		PLS[2:0]=000 (falling edge)	2	2.08	2.16	V
		PLS[2:0]=001 (rising edge)	2.19	2.28	2.37	V
		PLS[2:0]=001 (falling edge)	2.09	2.18	2.27	V
		PLS[2:0]=010 (rising edge)	2.28	2.38	2.48	V
		PLS[2:0]=010 (falling edge)	2.18	2.28	2.38	V
		PLS[2:0]=011 (rising edge)	2.38	2.48	2.58	V
		PLS[2:0]=011 (falling edge)	2.28	2.38	2.48	V
		PLS[2:0]=100 (rising edge)	2.47	2.58	2.69	V
		PLS[2:0]=100 (falling edge)	2.37	2.48	2.59	V
		PLS[2:0]=101 (rising edge)	2.57	2.68	2.79	V
		PLS[2:0]=101 (falling edge)	2.47	2.58	2.69	V
		PLS[2:0]=110 (rising edge)	2.66	2.78	2.9	V
		PLS[2:0]=110 (falling edge)	2.56	2.68	2.8	V
		PLS[2:0]=111 (rising edge)	2.76	2.88	3	V
		PLS[2:0]=111 (falling edge)	2.66	2.78	2.9	V
$V_{PVDhyst}$(2)	PVD hysteresis	-	-	100	-	mV
$V_{POR/PDR}$	Power on/power down reset threshold	Falling edge	1.8(1)	1.88	1.96	V
		Rising edge	1.84	1.92	2.0	V
$V_{PDRhyst}$(2)	PDR hysteresis	-	-	40	-	mV
$T_{RSTTEMPO}$(2)	Reset temporization	-	1	2.5	4.5	ms

1. The product behavior is guaranteed by design down to the minimum $V_{POR/PDR}$ value.
2. Guaranteed by design, not tested in production.

5.3.4 Embedded reference voltage

The parameters given in *Table 12* are derived from tests performed under ambient temperature and V_{DD} supply voltage conditions summarized in *Table 9*.

Table 12. Embedded internal reference voltage

Symbol	Parameter	Conditions	Min	Typ	Max	Unit
V_{REFINT}	Internal reference voltage	–40 °C < T_A < +105 °C	1.16	1.20	1.26	V
		–40 °C < T_A < +85 °C	1.16	1.20	1.24	V
$T_{S_vrefint}$(1)	ADC sampling time when reading the internal reference voltage	-	-	5.1	17.1(2)	µs
V_{RERINT}(2)	Internal reference voltage spread over the temperature range	V_{DD} = 3 V ±10 mV	-	-	10	mV
T_{Coeff}(2)	Temperature coefficient	-	-	-	100	ppm/°C

1. Shortest sampling time can be determined in the application by multiple iterations.
2. Guaranteed by design, not tested in production.

5.3.5 Supply current characteristics

The current consumption is a function of several parameters and factors such as the operating voltage, ambient temperature, I/O pin loading, device software configuration, operating frequencies, I/O pin switching rate, program location in memory and executed binary code.
The current consumption is measured as described in *Figure 12: Current consumption measurement scheme*.
All Run-mode current consumption measurements given in this section are performed with a reduced code that gives a consumption equivalent to Dhrystone 2.1 code.

Maximum current consumption

The MCU is placed under the following conditions:

- All I/O pins are in input mode with a static value at V_{DD} or V_{SS} (no load)
- All peripherals are disabled except when explicitly mentioned
- The Flash memory access time is adjusted to the f_{HCLK} frequency (0 wait state from 0 to 24 MHz, 1 wait state from 24 to 48 MHz and 2 wait states above)
- Prefetch in ON (reminder: this bit must be set before clock setting and bus prescaling)
- When the peripherals are enabled $f_{PCLK1} = f_{HCLK}/2$, $f_{PCLK2} = f_{HCLK}$

The parameters given in *Table 13*, *Table 14* and *Table 15* are derived from tests performed under ambient temperature and V_{DD} supply voltage conditions summarized in *Table 9*.

Table 13. Maximum current consumption in Run mode, code with data processing running from Flash

Symbol	Parameter	Conditions	f_{HCLK}	Max(1)		Unit
				T_A = 85 °C	T_A = 105 °C	
I_{DD}	Supply current in Run mode	External clock(2), all peripherals enabled	72 MHz	45	46	mA
			48 MHz	32	33	
			36 MHz	26	27	
			24 MHz	18	19	
			16 MHz	13	14	
			8 MHz	7	8	
		External clock(2), all peripherals disabled	72 MHz	30	31	
			48 MHz	23	24	
			36 MHz	19	20	
			24 MHz	13	14	
			16 MHz	10	11	
			8 MHz	6	7	

1. Based on characterization, not tested in production.
2. External clock is 8 MHz and PLL is on when f_{HCLK} > 8 MHz.

Table 14. Maximum current consumption in Run mode, code with data processing running from RAM

Symbol	Parameter	Conditions	f_{HCLK}	Max(1)		Unit
				T_A = 85 °C	T_A = 105 °C	
I_{DD}	Supply current in Run mode	External clock(2), all peripherals enabled	72 MHz	41	42	mA
			48 MHz	27	28	
			36 MHz	20	21	
			24 MHz	14	15	
			16 MHz	10	11	
			8 MHz	6	7	
		External clock(2), all peripherals disabled	72 MHz	27	28	
			48 MHz	19	20	
			36 MHz	15	16	
			24 MHz	10	11	
			16 MHz	7	8	
			8 MHz	5	6	

1. Based on characterization, tested in production at V_{DD} max, f_{HCLK} max.
2. External clock is 8 MHz and PLL is on when f_{HCLK} > 8 MHz.

Figure 13. Typical current consumption in Run mode versus frequency (at 3.6 V) - code with data processing running from RAM, peripherals enabled

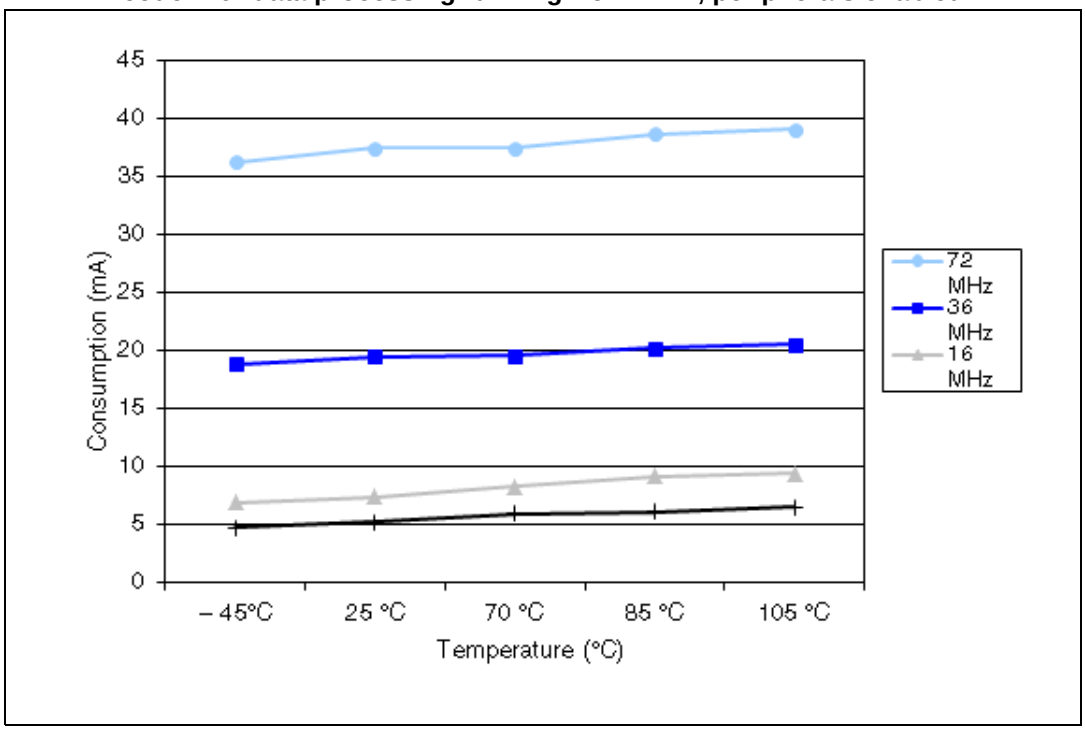

Figure 14. Typical current consumption in Run mode versus frequency (at 3.6 V) - code with data processing running from RAM, peripherals disabled

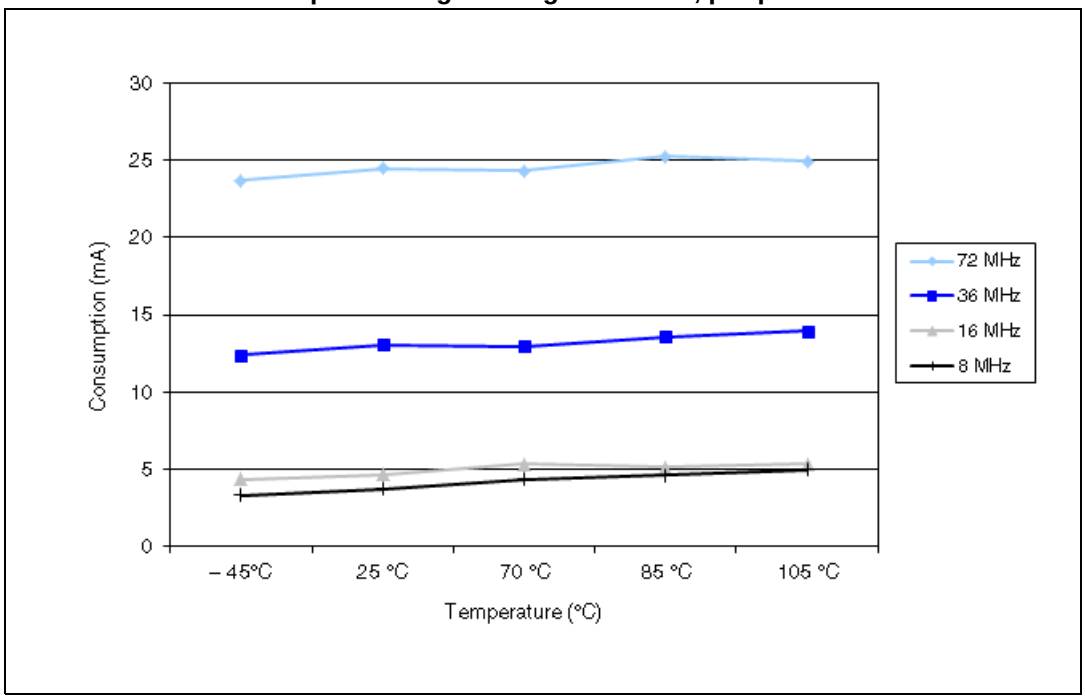

Table 15. Maximum current consumption in Sleep mode, code running from Flash or RAM

Symbol	Parameter	Conditions	f_{HCLK}	Max(1)		Unit
				T_A = 85 °C	T_A = 105 °C	
I_{DD}	Supply current in Sleep mode	External clock(2), all peripherals enabled	72 MHz	26	27	mA
			48 MHz	17	18	
			36 MHz	14	15	
			24 MHz	10	11	
			16 MHz	7	8	
			8 MHz	4	5	
		External clock(2), all peripherals disabled	72 MHz	7.5	8	
			48 MHz	6	6.5	
			36 MHz	5	5.5	
			24 MHz	4.5	5	
			16 MHz	4	4.5	
			8 MHz	3	4	

1. based on characterization, tested in production at $V_{DD\ max}$, f_{HCLK} max with peripherals enabled.
2. External clock is 8 MHz and PLL is on when f_{HCLK} > 8 MHz.

Table 16. Typical and maximum current consumptions in Stop and Standby modes

Symbol	Parameter	Conditions	Typ(1)			Max		Unit
			V_{DD}/V_{BAT} = 2.0 V	V_{DD}/V_{BAT} = 2.4 V	V_{DD}/V_{BAT} = 3.3 V	T_A = 85 °C	T_A = 105 °C	
I_{DD}	Supply current in Stop mode	Regulator in Run mode, low-speed and high-speed internal RC oscillators and high-speed oscillator OFF (no independent watchdog)	-	21.3	21.7	160	200	µA
		Regulator in Low Power mode, low-speed and high-speed internal RC oscillators and high-speed oscillator OFF (no independent watchdog)	-	11.3	11.7	145	185	
	Supply current in Standby mode	Low-speed internal RC oscillator and independent watchdog ON	-	2.75	3.4	-	-	
		Low-speed internal RC oscillator ON, independent watchdog OFF	-	2.55	3.2	-	-	
		Low-speed internal RC oscillator and independent watchdog OFF, low-speed oscillator and RTC OFF	-	1.55	1.9	3.2	4.5	
I_{DD_VBAT}	Backup domain supply current	Low-speed oscillator and RTC ON	0.9	1.1	1.4	1.9(2)	2.2	

1. Typical values are measured at T_A = 25 °C.
2. Based on characterization, not tested in production.

Figure 15. Typical current consumption on V_{BAT} with RTC on versus temperature at different V_{BAT} values

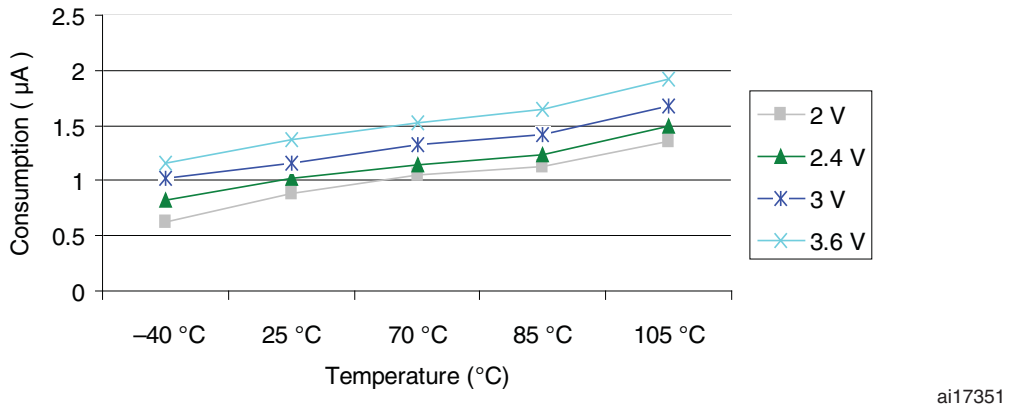

Figure 16. Typical current consumption in Stop mode with regulator in Run mode versus temperature at V_{DD} = 3.3 V and 3.6 V

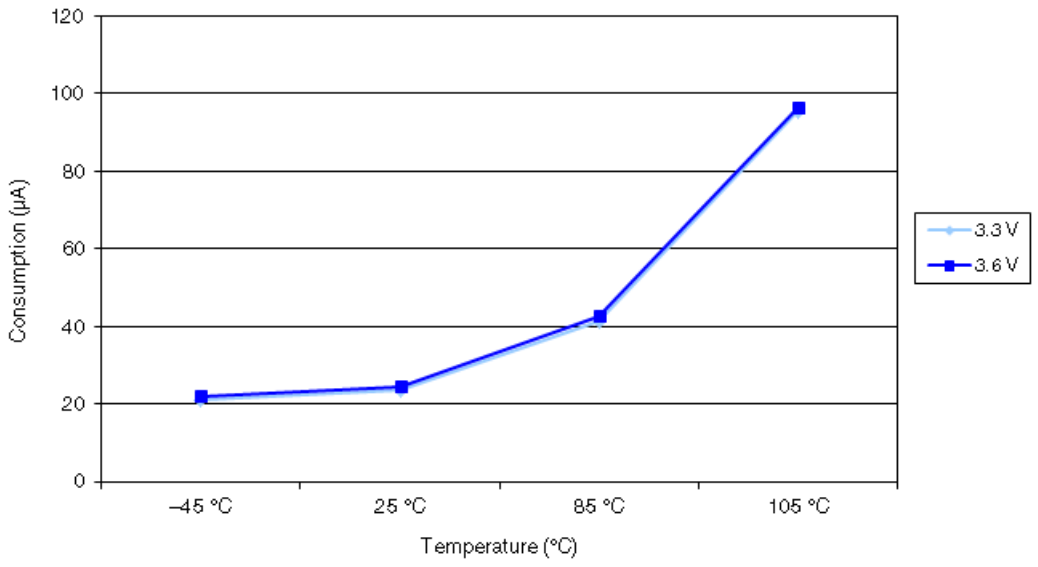

Figure 17. Typical current consumption in Stop mode with regulator in Low-power mode versus temperature at V_{DD} = 3.3 V and 3.6 V

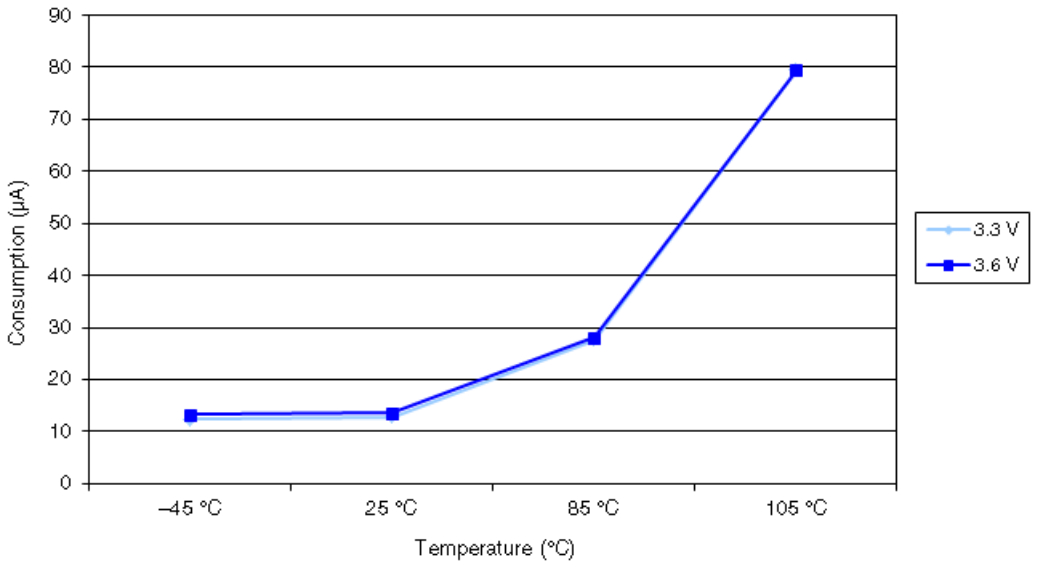

Figure 18. Typical current consumption in Standby mode versus temperature at V_{DD} = 3.3 V and 3.6 V

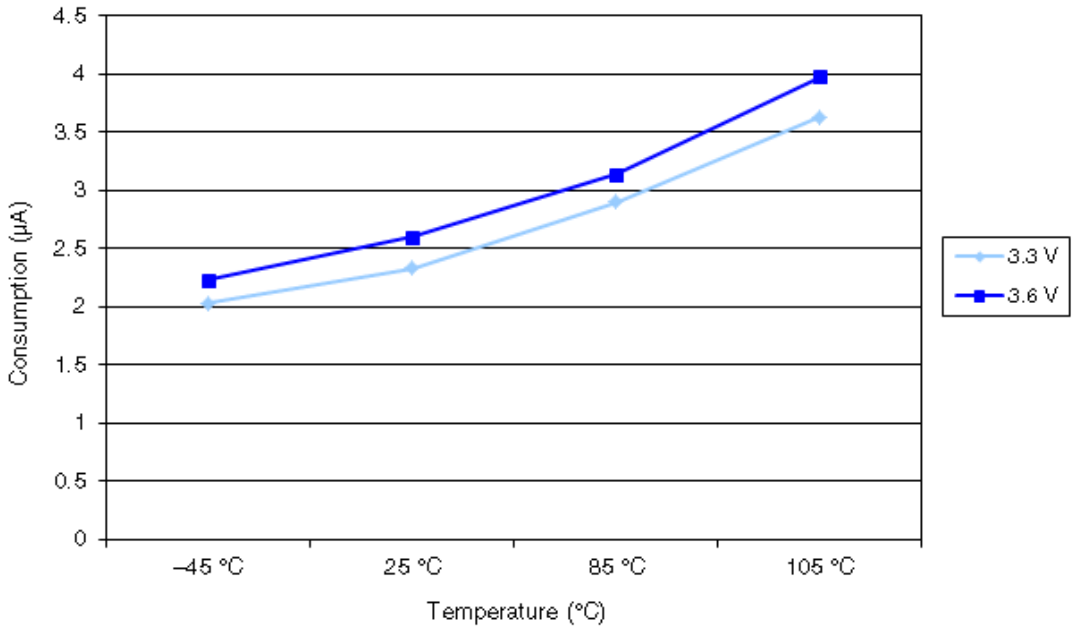

Typical current consumption

The MCU is placed under the following conditions:

- All I/O pins are in input mode with a static value at V_{DD} or V_{SS} (no load).
- All peripherals are disabled except if it is explicitly mentioned.
- The Flash access time is adjusted to f_{HCLK} frequency (0 wait state from 0 to 24 MHz, 1 wait state from 24 to 48 MHz and 2 wait states above).
- Ambient temperature and V_{DD} supply voltage conditions summarized in *Table 9*.
- Prefetch is ON (Reminder: this bit must be set before clock setting and bus prescaling)
- When the peripherals are enabled $f_{PCLK1} = f_{HCLK}/4$, $f_{PCLK}2 = f_{HCLK}/2$, $f_{ADCCLK} = f_{PCLK2}/4$

Table 17. Typical current consumption in Run mode, code with data processing running from Flash

Symbol	Parameter	Conditions	f_{HCLK}	Typ(1)		Unit
				All peripherals enabled(2)	All peripherals disabled	
I_{DD}	Supply current in Run mode	External clock(3)	72 MHz	31.3	24.5	mA
			48 MHz	21.9	17.4	
			36 MHz	17.2	13.8	
			24 MHz	11.2	8.9	
			16 MHz	8.1	6.6	
			8 MHz	5	4.2	
			4 MHz	3	2.6	
			2 MHz	2	1.8	
			1 MHz	1.5	1.4	
			500 kHz	1.2	1.2	
			125 kHz	1.05	1	
		Running on high speed internal RC (HSI), AHB prescaler used to reduce the frequency	64 MHz	27.6	21.6	mA
			48 MHz	21.2	16.7	
			36 MHz	16.5	13.1	
			24 MHz	10.5	8.2	
			16 MHz	7.4	5.9	
			8 MHz	4.3	3.6	
			4 MHz	2.4	2	
			2 MHz	1.5	1.3	
			1 MHz	1	0.9	
			500 kHz	0.7	0.65	
			125 kHz	0.5	0.45	

1. Typical values are measures at T_A = 25 °C, V_{DD} = 3.3 V.
2. Add an additional power consumption of 0.8 mA per ADC for the analog part. In applications, this consumption occurs only while the ADC is on (ADON bit is set in the ADC_CR2 register).
3. External clock is 8 MHz and PLL is on when f_{HCLK} > 8 MHz.

Table 18. Typical current consumption in Sleep mode, code running from Flash or RAM

Symbol	Parameter	Conditions	f_{HCLK}	Typ(1)		Unit
				All peripherals enabled(2)	All peripherals disabled	
I_{DD}	Supply current in Sleep mode	External clock(3)	72 MHz	12.6	5.3	mA
			48 MHz	8.7	3.8	
			36 MHz	6.7	3.1	
			24 MHz	4.8	2.3	
			16 MHz	3.4	1.8	
			8 MHz	2	1.2	
			4 MHz	1.5	1.1	
			2 MHz	1.25	1	
			1 MHz	1.1	0.98	
			500 kHz	1.05	0.96	
			125 kHz	1	0.95	
		Running on high speed internal RC (HSI), AHB prescaler used to reduce the frequency	64 MHz	10.6	4.2	
			48 MHz	8.1	3.2	
			36 MHz	6.1	2.5	
			24 MHz	4.2	1.7	
			16 MHz	2.8	1.2	
			8 MHz	1.4	0.55	
			4 MHz	0.9	0.5	
			2 MHz	0.7	0.45	
			1 MHz	0.55	0.42	
			500 kHz	0.48	0.4	
			125 kHz	0.4	0.38	

1. Typical values are measures at T_A = 25 °C, V_{DD} = 3.3 V.
2. Add an additional power consumption of 0.8 mA per ADC for the analog part. In applications, this consumption occurs only while the ADC is on (ADON bit is set in the ADC_CR2 register).
3. External clock is 8 MHz and PLL is on when f_{HCLK} > 8 MHz.

On-chip peripheral current consumption

The current consumption of the on-chip peripherals is given in *Table 19*. The MCU is placed under the following conditions:

- all I/O pins are in input mode with a static value at V_{DD} or V_{SS} (no load)
- all peripherals are disabled unless otherwise mentioned
- the given value is calculated by measuring the current consumption
  - with all peripherals clocked off
  - with only one peripheral clocked on
- ambient operating temperature and V_{DD} supply voltage conditions summarized in *Table 6*

Table 19. Peripheral current consumption(1)

Peripheral		Typical consumption at 25 °C	Unit
AHB (up to 72MHz)	DMA1	15.97	µA/MHz
	CRC	1.67	
	BusMatrix(2)	8.33	
APB1(up to 36MHz)	APB1 Bridge	7.22	µA/MHz
	TIM2	33.33	
	TIM3	33.61	
	USART2	12.78	
	I2C1	10.83	
	USB	16.94	
	CAN1	17.50	
	WWDG	3.33	
	PWR	1.94	
	BKP	2.78	
	IWDG	1.39	
APB2 (up to 72MHz)	APB2-Bridge	3.33	µA/MHz
	GPIO A	7.50	
	GPIO B	6.81	
	GPIO C	7.22	
	GPIO D	6.94	
	ADC1(3) (4)	15.54	
	ADC2	14.64	
	TIM1	21.53	
	SPI	4.86	
	USART1	12.78	

1. f_{HCLK} = 72 MHz, $f_{APB1} = f_{HCLK}/2$, $f_{APB2} = f_{HCLK}$, default prescaler value for each peripheral.
2. The BusMatrix is automatically active when at least one master is ON.
3. Specific conditions for ADC: f_{HCLK} = 56 MHz, $f_{APB1} = f_{HCLK}/2$, $f_{APB2} = f_{HCLK}$, $f_{ADCCLK} = f_{APB2/4}$. When ADON bit in the ADC_CR2 register is set to 1,.we have a consumption added equal to 0.68 mA.
4. When we enable the ADC, a current consumption is added equal to 0,06 mA.

5.3.6 External clock source characteristics

High-speed external user clock generated from an external source

The characteristics given in *Table 20* result from tests performed using an high-speed external clock source, and under ambient temperature and supply voltage conditions summarized in *Table 9*.

Table 20. High-speed external user clock characteristics

Symbol	Parameter	Conditions	Min	Typ	Max	Unit
f_{HSE_ext}	User external clock source frequency(1)	-	1	8	25	MHz
V_{HSEH}	OSC_IN input pin high level voltage		$0.7V_{DD}$	-	V_{DD}	V
V_{HSEL}	OSC_IN input pin low level voltage		V_{SS}	-	$0.3V_{DD}$	
$t_{w(HSE)}$ $t_{w(HSE)}$	OSC_IN high or low time(1)		5	-	-	ns
$t_{r(HSE)}$ $t_{f(HSE)}$	OSC_IN rise or fall time(1)		-	-	20	
$C_{in(HSE)}$	OSC_IN input capacitance(1)	-	-	5	-	pF
$DuCy_{(HSE)}$	Duty cycle	-	45	-	55	%
I_L	OSC_IN Input leakage current	$V_{SS} \leq V_{IN} \leq V_{DD}$	-	-	±1	µA

1. Guaranteed by design, not tested in production.

Low-speed external user clock generated from an external source

The characteristics given in *Table 21* result from tests performed using an low-speed external clock source, and under ambient temperature and supply voltage conditions summarized in *Table 9*.

Table 21. Low-speed external user clock characteristics

Symbol	Parameter	Conditions	Min	Typ	Max	Unit
f_{LSE_ext}	User External clock source frequency(1)	-	-	32.768	1000	kHz
V_{LSEH}	OSC32_IN input pin high level voltage		$0.7V_{DD}$	-	V_{DD}	V
V_{LSEL}	OSC32_IN input pin low level voltage		V_{SS}	-	$0.3V_{DD}$	
$t_{w(LSE)}$ $t_{w(LSE)}$	OSC32_IN high or low time(1)		450	-	-	ns
$t_{r(LSE)}$ $t_{f(LSE)}$	OSC32_IN rise or fall time(1)		-	-	50	
$C_{in(LSE)}$	OSC32_IN input capacitance(1)	-	-	5	-	pF
$DuCy_{(LSE)}$	Duty cycle	-	30	-	70	%
I_L	OSC32_IN Input leakage current	$V_{SS} \leq V_{IN} \leq V_{DD}$	-	-	±1	µA

1. Guaranteed by design, not tested in production.

Figure 19. High-speed external clock source AC timing diagram

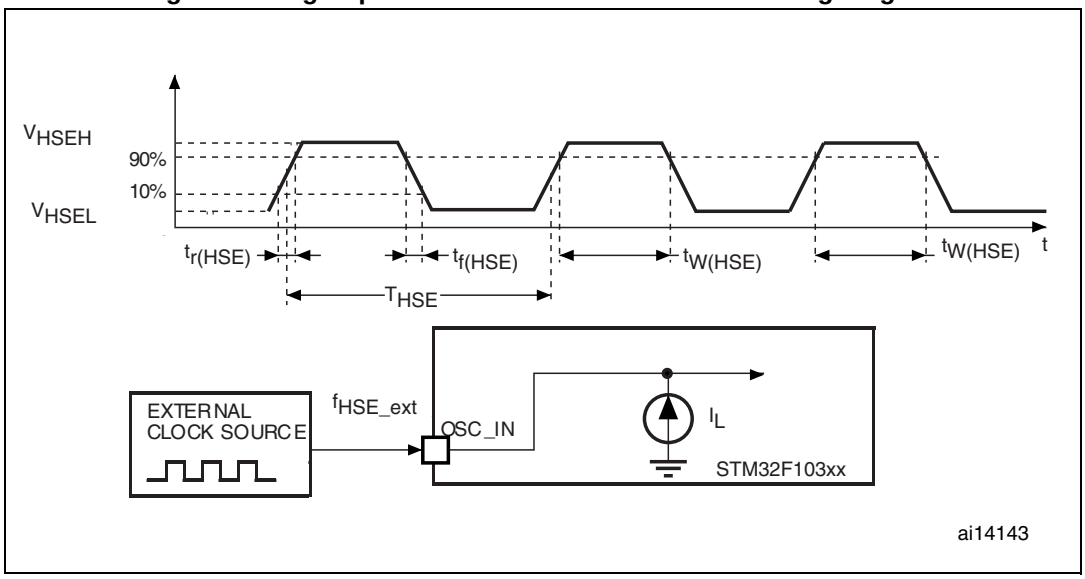

Figure 20. Low-speed external clock source AC timing diagram

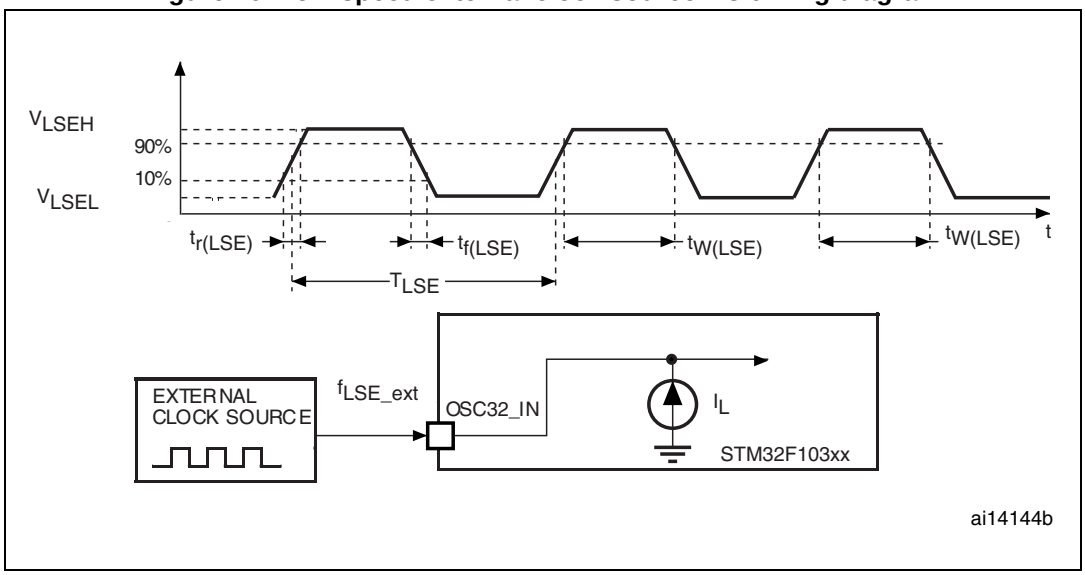

High-speed external clock generated from a crystal/ceramic resonator

The high-speed external (HSE) clock can be supplied with a 4 to 16 MHz crystal/ceramic resonator oscillator. All the information given in this paragraph are based on characterization results obtained with typical external components specified in *Table 22*. In the application, the resonator and the load capacitors have to be placed as close as possible to the oscillator pins in order to minimize output distortion and startup stabilization time. Refer to the crystal resonator manufacturer for more details on the resonator characteristics (frequency, package, accuracy).

Table 22. HSE 4-16 MHz oscillator characteristics(1) (2)

Symbol	Parameter	Conditions	Min	Typ	Max	Unit
f_{OSC_IN}	Oscillator frequency	-	4	8	16	MHz
R_F	Feedback resistor	-	-	200	-	kΩ
C	Recommended load capacitance versus equivalent serial resistance of the crystal (R_S)(3)	R_S = 30 Ω	-	30	-	pF
i_2	HSE driving current	V_{DD} = 3.3 V, V_{IN} = V_{SS} with 30 pF load	-	-	1	mA
g_m	Oscillator transconductance	Startup	25	-	-	mA/V
$t_{SU(HSE}$(4)	startup time	V_{DD} is stabilized	-	2	-	ms

1. Resonator characteristics given by the crystal/ceramic resonator manufacturer.
2. Based on characterization, not tested in production.
3. The relatively low value of the RF resistor offers a good protection against issues resulting from use in a humid environment, due to the induced leakage and the bias condition change. However, it is recommended to take this point into account if the MCU is used in tough humidity conditions.
4. $t_{SU(HSE)}$ is the startup time measured from the moment it is enabled (by software) to a stabilized 8 MHz oscillation is reached. This value is measured for a standard crystal resonator and it can vary significantly with the crystal manufacturer

For C_{L1} and C_{L2}, it is recommended to use high-quality external ceramic capacitors in the 5 pF to 25 pF range (typ.), designed for high-frequency applications, and selected to match the requirements of the crystal or resonator (see *Figure 21*). C_{L1} and C_{L2} are usually the same size. The crystal manufacturer typically specifies a load capacitance which is the series combination of C_{L1} and C_{L2}. PCB and MCU pin capacitance must be included (10 pF can be used as a rough estimate of the combined pin and board capacitance) when sizing C_{L1} and C_{L2}. Refer to the application note AN2867 “Oscillator design guide for ST microcontrollers” available from the ST website www.st.com.

Figure 21. Typical application with an 8 MHz crystal

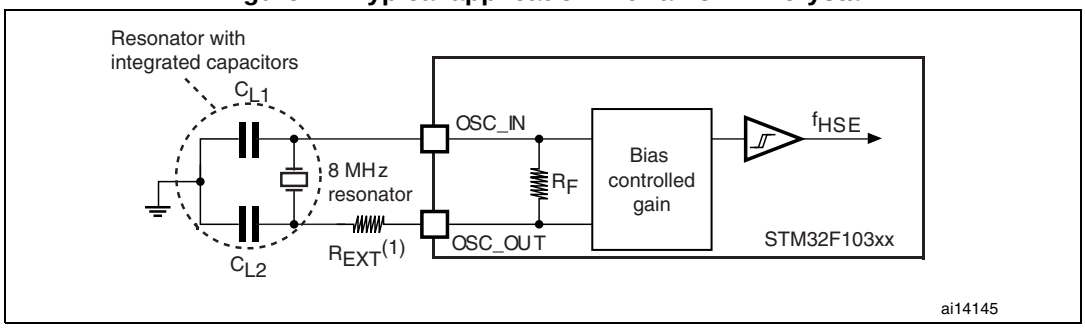

1. R_{EXT} value depends on the crystal characteristics.

Low-speed external clock generated from a crystal/ceramic resonator

The low-speed external (LSE) clock can be supplied with a 32.768 kHz crystal/ceramic resonator oscillator. All the information given in this paragraph are based on characterization results obtained with typical external components specified in *Table 23*. In the application, the resonator and the load capacitors have to be placed as close as possible to the oscillator pins in order to minimize output distortion and startup stabilization

time. Refer to the crystal resonator manufacturer for more details on the resonator characteristics (frequency, package, accuracy).

Table 23. LSE oscillator characteristics (f_{LSE} = 32.768 kHz)(1) (2)

Symbol	Parameter	Conditions	-	Min	Typ	Max	Unit
R_F	Feedback resistor	-	-	-	5	-	MΩ
C	Recommended load capacitance versus equivalent serial resistance of the crystal (R_S)	R_S = 30 KΩ	-	-	-	15	pF
I_2	LSE driving current	V_{DD} = 3.3 V V_{IN} = V_{SS}	-	-	-	1.4	µA
g_m	Oscillator transconductance	-	-	5	-	-	µA/V
$t_{SU(LSE)}$(3)	Startup time	V_{DD} is stabilized	T_A = 50 °C	-	1.5	-	s
			T_A = 25 °C	-	2.5	-	
			T_A = 10 °C	-	4	-	
			T_A = 0 °C	-	6	-	
			T_A = -10 °C	-	10	-	
			T_A = -20 °C	-	17	-	
			T_A = -30 °C	-	32	-	
			T_A = -40 °C	-	60	-	

1. Based on characterization, not tested in production.
2. Refer to the note and caution paragraphs below the table, and to the application note AN2867 “Oscillator design guide for ST microcontrollers”.
3. $t_{SU(LSE)}$ is the startup time measured from the moment it is enabled (by software) to a stabilized 32.768 kHz oscillation is reached. This value is measured for a standard crystal and it can vary significantly with the crystal manufacturer

Note: *For C_{L1} and C_{L2} it is recommended to use high-quality ceramic capacitors in the 5 pF to 15 pF range selected to match the requirements of the crystal or resonator. C_{L1} and C_{L2}, are usually the same size. The crystal manufacturer typically specifies a load capacitance which is the series combination of C_{L1} and C_{L2}.*
Load capacitance C_L has the following formula: $C_L = C_{L1} \times C_{L2} / (C_{L1} + C_{L2}) + C_{stray}$ where C_{stray} is the pin capacitance and board or trace PCB-related capacitance. Typically, it is between 2 pF and 7 pF.

Caution: To avoid exceeding the maximum value of C_{L1} and C_{L2} (15 pF) it is strongly recommended to use a resonator with a load capacitance $C_L \leq 7$ pF. Never use a resonator with a load capacitance of 12.5 pF.
Example: if you choose a resonator with a load capacitance of C_L = 6 pF, and C_{stray} = 2 pF, then $C_{L1} = C_{L2}$ = 8 pF.

Figure 22. Typical application with a 32.768 kHz crystal

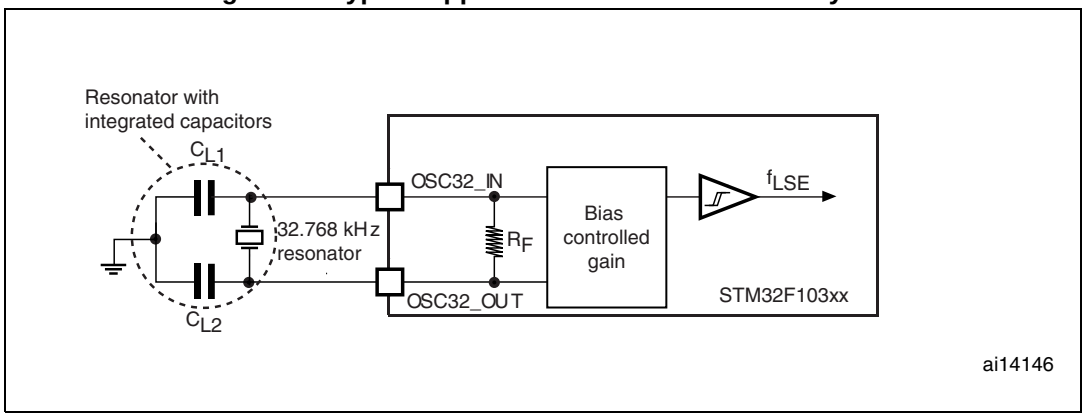

5.3.7 Internal clock source characteristics

The parameters given in *Table 24* are derived from tests performed under ambient temperature and V_{DD} supply voltage conditions summarized in *Table 9*.

High-speed internal (HSI) RC oscillator

Table 24. HSI oscillator characteristics(1)

Symbol	Parameter	Conditions		Min	Typ	Max	Unit
f_{HSI}	Frequency	-		-	8	-	MHz
$DuCy_{(HSI)}$	Duty cycle	-		45	-	55	%
ACC_{HSI}	Accuracy of the HSI oscillator	User-trimmed with the RCC_CR register(2)		-	-	1(3)	%
		Factory-calibrated (4)(5)	T_A = –40 to 105 °C	–2	-	2.5	%
			T_A = –10 to 85 °C	–1.5	-	2.2	%
			T_A = 0 to 70 °C	–1.3	-	2	%
			T_A = 25 °C	–1.1	-	1.8	%
$t_{su(HSI)}$(4)	HSI oscillator startup time	-		1	-	2	µs
$I_{DD(HSI)}$(4)	HSI oscillator power consumption	-		-	80	100	µA

1. V_{DD} = 3.3 V, T_A = –40 to 105 °C unless otherwise specified.
2. Refer to application note AN2868 “STM32F10xxx internal RC oscillator (HSI) calibration” available from the ST website www.st.com.
3. Guaranteed by design, not tested in production.
4. Based on characterization, not tested in production.
5. The actual frequency of HSI oscillator may be impacted by a reflow, but does not drift out of the specified range.

Low-speed internal (LSI) RC oscillator

Table 25. LSI oscillator characteristics (1)

Symbol	Parameter	Min	Typ	Max	Unit
f_{LSI}(2)	Frequency	30	40	60	kHz
$t_{su(LSI)}$(3)	LSI oscillator startup time	-	-	85	µs
$I_{DD(LSI)}$(3)	LSI oscillator power consumption	-	0.65	1.2	µA

1. V_{DD} = 3 V, T_A = –40 to 105 °C unless otherwise specified.
2. Based on characterization, not tested in production.
3. Guaranteed by design, not tested in production.

Wakeup time from low-power mode

The wakeup times given in *Table 26* is measured on a wakeup phase with a 8-MHz HSI RC oscillator. The clock source used to wake up the device depends from the current operating mode:

- Stop or Standby mode: the clock source is the RC oscillator
- Sleep mode: the clock source is the clock that was set before entering Sleep mode.

All timings are derived from tests performed under ambient temperature and V_{DD} supply voltage conditions summarized in *Table 9*.

Table 26. Low-power mode wakeup timings

Symbol	Parameter	Typ	Unit
$t_{WUSLEEP}$(1)	Wakeup from Sleep mode	1.8	µs
t_{WUSTOP}(1)	Wakeup from Stop mode (regulator in run mode)	3.6	µs
	Wakeup from Stop mode (regulator in low power mode)	5.4	
$t_{WUSTDBY}$(1)	Wakeup from Standby mode	50	µs

1. The wakeup times are measured from the wakeup event to the point in which the user application code reads the first instruction.

5.3.8 PLL characteristics

The parameters given in *Table 27* are derived from tests performed under ambient temperature and V_{DD} supply voltage conditions summarized in *Table 9*.

Table 27. PLL characteristics

Symbol	Parameter	Value			Unit
		Min(1)	Typ	Max(1)	
f_{PLL_IN}	PLL input clock(2)	1	8.0	25	MHz
	PLL input clock duty cycle	40	-	60	%
f_{PLL_OUT}	PLL multiplier output clock	16	-	72	MHz
t_{LOCK}	PLL lock time	-	-	200	µs
Jitter	Cycle-to-cycle jitter	-	-	300	ps

1. Based on characterization, not tested in production.
2. Take care of using the appropriate multiplier factors so as to have PLL input clock values compatible with the range defined by f_{PLL_OUT}.

5.3.9 Memory characteristics

Flash memory

The characteristics are given at T_A = –40 to 105 °C unless otherwise specified.

Table 28. Flash memory characteristics

Symbol	Parameter	Conditions	Min(1)	Typ	Max(1)	Unit
t_{prog}	16-bit programming time	T_A = –40 to +105 °C	40	52.5	70	µs
t_{ERASE}	Page (1 KB) erase time	T_A = –40 to +105 °C	20	-	40	ms
t_{ME}	Mass erase time	T_A = –40 to +105 °C	20	-	40	ms

Table 28. Flash memory characteristics (continued)

Symbol	Parameter	Conditions	Min(1)	Typ	Max(1)	Unit
I_{DD}	Supply current	Read mode f_{HCLK} = 72 MHz with 2 wait states, V_{DD} = 3.3 V	-	-	20	mA
		Write / Erase modes f_{HCLK} = 72 MHz, V_{DD} = 3.3 V	-	-	5	mA
		Power-down mode / Halt, V_{DD} = 3.0 to 3.6 V	-	-	50	µA
V_{prog}	Programming voltage	-	2	-	3.6	V

1. Guaranteed by design, not tested in production.

Table 29. Flash memory endurance and data retention

Symbol	Parameter	Conditions	Value			Unit
			Min(1)	Typ	Max	
N_{END}	Endurance	T_A = –40 to +85 °C (6 suffix versions) T_A = –40 to +105 °C (7 suffix versions)	10	-	-	kcycles
t_{RET}	Data retention	1 kcycle(2) at T_A = 85 °C	30	-	-	Years
		1 kcycle(2) at T_A = 105 °C	10	-	-	
		10 kcycles(2) at T_A = 55 °C	20	-	-	

1. Based on characterization, not tested in production.
2. Cycling performed over the whole temperature range.

5.3.10 EMC characteristics

Susceptibility tests are performed on a sample basis during device characterization.

Functional EMS (electromagnetic susceptibility)

While a simple application is executed on the device (toggling 2 LEDs through I/O ports). the device is stressed by two electromagnetic events until a failure occurs. The failure is indicated by the LEDs:

- **Electrostatic discharge (ESD)** (positive and negative) is applied to all device pins until a functional disturbance occurs. This test is compliant with the IEC 61000-4-2 standard.
- **FTB**: A Burst of Fast Transient voltage (positive and negative) is applied to V_{DD} and V_{SS} through a 100 pF capacitor, until a functional disturbance occurs. This test is compliant with the IEC 61000-4-4 standard.

A device reset allows normal operations to be resumed.

The test results are given in *Table 30*. They are based on the EMS levels and classes defined in application note AN1709.

Table 30. EMS characteristics

Symbol	Parameter	Conditions	Level/ Class
V_{FESD}	Voltage limits to be applied on any I/O pin to induce a functional disturbance	V_{DD} = 3.3 V, T_A = +25 °C, f_{HCLK} = 72 MHz conforms to IEC 61000-4-2	2B
V_{EFTB}	Fast transient voltage burst limits to be applied through 100 pF on V_{DD} and V_{SS} pins to induce a functional disturbance	V_{DD} = 3.3 V, T_A = +25 °C, f_{HCLK} = 72 MHz conforms to IEC 61000-4-4	4A

Designing hardened software to avoid noise problems

EMC characterization and optimization are performed at component level with a typical application environment and simplified MCU software. It should be noted that good EMC performance is highly dependent on the user application and the software in particular.

Therefore it is recommended that the user applies EMC software optimization and prequalification tests in relation with the EMC level requested for his application.

Software recommendations

The software flowchart must include the management of runaway conditions such as:

- Corrupted program counter
- Unexpected reset
- Critical Data corruption (control registers...)

Prequalification trials

Most of the common failures (unexpected reset and program counter corruption) can be reproduced by manually forcing a low state on the NRST pin or the Oscillator pins for 1 second.

To complete these trials, ESD stress can be applied directly on the device, over the range of specification values. When unexpected behavior is detected, the software can be hardened to prevent unrecoverable errors occurring (see application note AN1015).

Electromagnetic Interference (EMI)

The electromagnetic field emitted by the device are monitored while a simple application is executed (toggling 2 LEDs through the I/O ports). This emission test is compliant with IEC 61967-2 standard which specifies the test board and the pin loading.

Table 31. EMI characteristics

Symbol	Parameter	Conditions	Monitored frequency band	Max vs. [f_{HSE}/f_{HCLK}]		Unit
				8/48 MHz	8/72 MHz	
S_{EMI}	Peak level	V_{DD} = 3.3 V, T_A = 25 °C	0.1 to 30 MHz	12	12	dBµV
			30 to 130 MHz	22	19	
			130 MHz to 1GHz	23	29	
			SAE EMI Level	4	4	-

5.3.11 Absolute maximum ratings (electrical sensitivity)

Based on three different tests (ESD, LU) using specific measurement methods, the device is stressed in order to determine its performance in terms of electrical sensitivity.

Electrostatic discharge (ESD)

Electrostatic discharges (a positive then a negative pulse separated by 1 second) are applied to the pins of each sample according to each pin combination. The sample size depends on the number of supply pins in the device (3 parts × (n+1) supply pins). This test conforms to the JESD22-A114/C101 standard.

Table 32. ESD absolute maximum ratings

Symbol	Ratings	Conditions	Class	Maximum value(1)	Unit
$V_{ESD(HBM)}$	Electrostatic discharge voltage (human body model)	T_A = +25 °C conforming to JESD22-A114	2	2000	V
$V_{ESD(CDM)}$	Electrostatic discharge voltage (charge device model)	T_A = +25 °C conforming to JESD22-C101	II	500	

1. Based on characterization results, not tested in production.

Static latch-up

Two complementary static tests are required on six parts to assess the latch-up performance:

- A supply overvoltage is applied to each power supply pin
- A current injection is applied to each input, output and configurable I/O pin

These tests are compliant with EIA/JESD 78A IC latch-up standard.

Table 33. Electrical sensitivities

Symbol	Parameter	Conditions	Class
LU	Static latch-up class	T_A = +105 °C conforming to JESD78A	II level A

5.3.12 I/O current injection characteristics

As a general rule, current injection to the I/O pins, due to external voltage below V_{SS} or above V_{DD} (for standard, 3 V-capable I/O pins) should be avoided during normal product operation. However, in order to give an indication of the robustness of the microcontroller in cases when abnormal injection accidentally happens, susceptibility tests are performed on a sample basis during device characterization.

Functional susceptibilty to I/O current injection

While a simple application is executed on the device, the device is stressed by injecting current into the I/O pins programmed in floating input mode. While current is injected into the I/O pin, one at a time, the device is checked for functional failures.

The failure is indicated by an out of range parameter: ADC error above a certain limit (>5 LSB TUE), out of spec current injection on adjacent pins or other functional failure (for example reset, oscillator frequency deviation).

The test results are given in *Table 34*

Table 34. I/O current injection susceptibility

Symbol	Description	Functional susceptibility		Unit
		Negative injection	Positive injection	
I_{INJ}	Injected current on OSC_IN32, OSC_OUT32, PA4, PA5, PC13	-0	+0	mA
	Injected current on all FT pins	-5	+0	
	Injected current on any other pin	-5	+5	

5.3.13 I/O port characteristics

General input/output characteristics

Unless otherwise specified, the parameters given in *Table 35* are derived from tests performed under the conditions summarized in *Table 9*. All I/Os are CMOS and TTL compliant.

Table 35. I/O static characteristics

Symbol	Parameter	Conditions	Min	Typ	Max	Unit
V_{IL}	Low level input voltage	Standard IO input low level voltage	-	-	$0.28*(V_{DD}-2\ V)+0.8\ V$(1)	V
		IO FT(3) input low level voltage	-	-	$0.32*(V_{DD}-2V)+0.75\ V$(1)	
		All I/Os except BOOT0	-	-	$0.35V_{DD}$(2)	
V_{IH}	High level input voltage	Standard IO input high level voltage	$0.41*(V_{DD}-2\ V)+1.3\ V$(1)	-	-	
		IO FT(3) input high level voltage	$0.42*(V_{DD}-2\ V)+1\ V$(1)	-	-	
		All I/Os except BOOT0	$0.65V_{DD}$(2)	-	-	
V_{hys}	Standard IO Schmitt trigger voltage hysteresis(4)	-	200	-	-	mV
	IO FT Schmitt trigger voltage hysteresis(4)	-	5% V_{DD}(5)	-	-	
I_{lkg}	Input leakage current (6)	$V_{SS} \le V_{IN} \le V_{DD}$ Standard I/Os	-	-	±1	µA
		$V_{IN} = 5\ V$ I/O FT	-	-	3	
R_{PU}	Weak pull-up equivalent resistor(7)	$V_{IN} = V_{SS}$	30	40	50	kΩ
R_{PD}	Weak pull-down equivalent resistor(7)	$V_{IN} = V_{DD}$	30	40	50	
C_{IO}	I/O pin capacitance	-	-	5	-	pF

1. Data based on design simulation.
2. Tested in production.
3. FT = Five-volt tolerant. In order to sustain a voltage higher than V_{DD}+0.3 the internal pull-up/pull-down resistors must be disabled.
4. Hysteresis voltage between Schmitt trigger switching levels. Based on characterization, not tested in production.
5. With a minimum of 100 mV.
6. Leakage could be higher than max. if negative current is injected on adjacent pins.
7. Pull-up and pull-down resistors are designed with a true resistance in series with a switchable PMOS/NMOS. This PMOS/NMOS contribution to the series resistance is minimum (~10% order).

All I/Os are CMOS and TTL compliant (no software configuration required). Their characteristics cover more than the strict CMOS-technology or TTL parameters. The coverage of these requirements is shown in *Figure 23* and *Figure 24* for standard I/Os, and in *Figure 25* and *Figure 26* for 5 V tolerant I/Os.

Figure 23. Standard I/O input characteristics - CMOS port

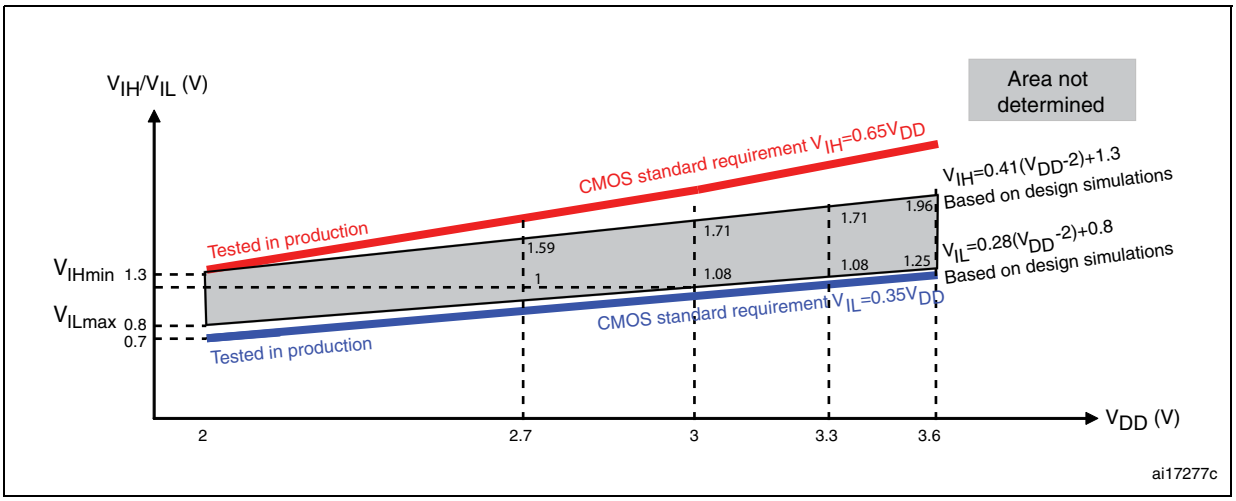

Figure 24. Standard I/O input characteristics - TTL port

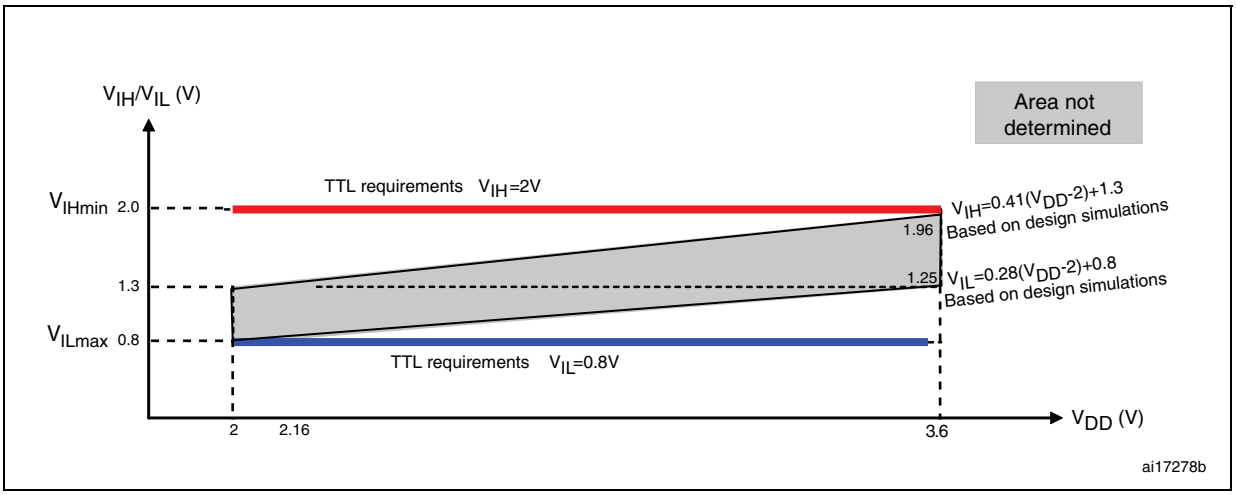

Figure 25. 5 V tolerant I/O input characteristics - CMOS port

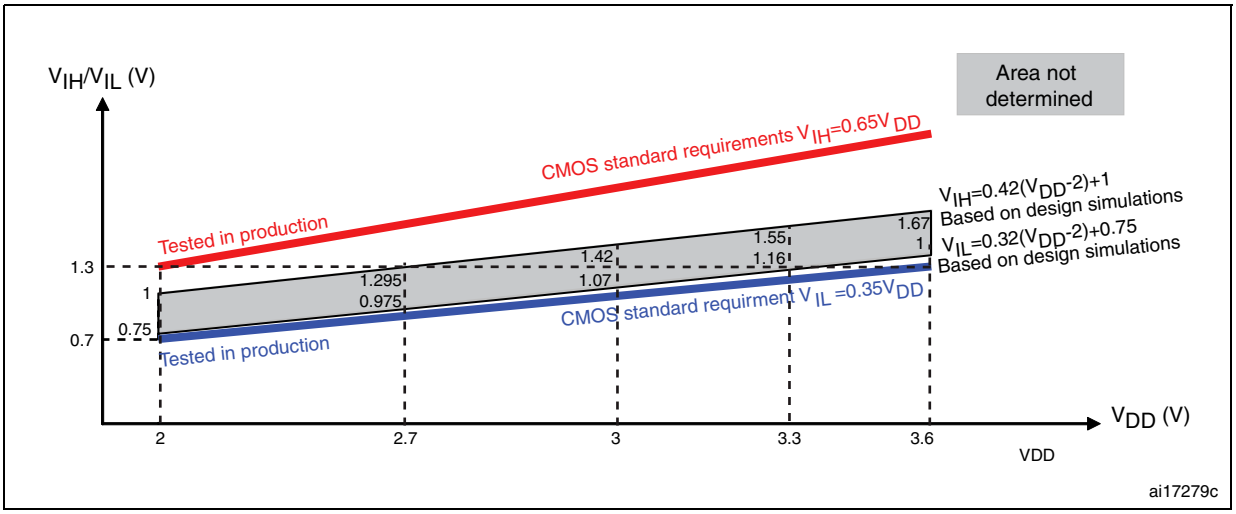

Figure 26. 5 V tolerant I/O input characteristics - TTL port

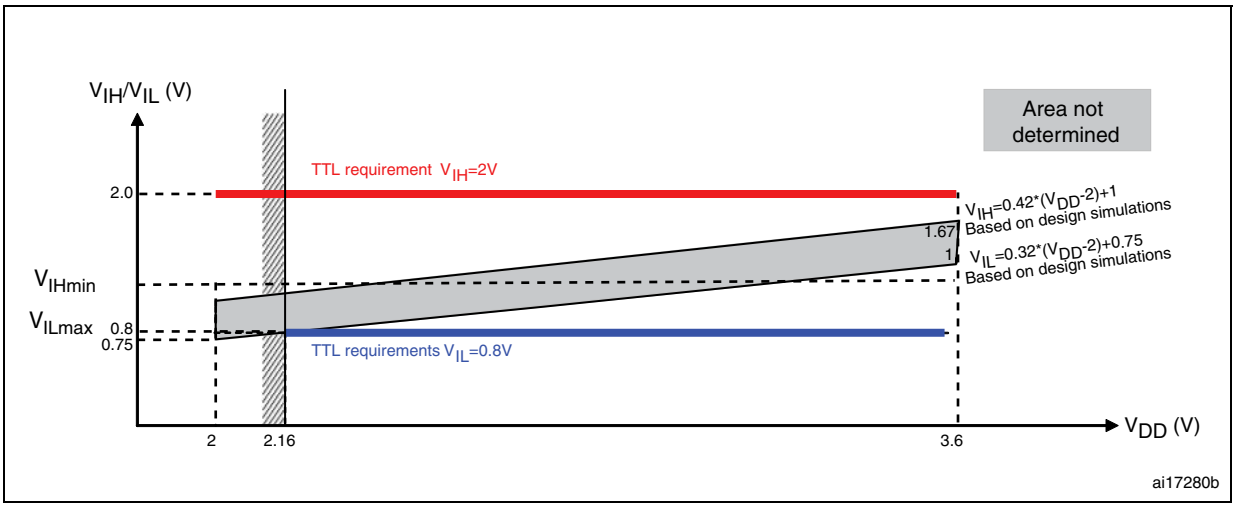

Output driving current

The GPIOs (general-purpose inputs/outputs) can sink or source up to ±8 mA, and sink or source up to ±20 mA (with a relaxed V_{OL}/V_{OH}) except PC13, PC14 and PC15 which can sink or source up to +/-3mA. When using the GPIOs PC13 to PC15 in output mode, the speed should not exceed 2 MHz with a maximum load of 30 pF.

In the user application, the number of I/O pins which can drive current must be limited to respect the absolute maximum rating specified in *Section 5.2*:

- The sum of the currents sourced by all the I/Os on $V_{DD,}$ plus the maximum Run consumption of the MCU sourced on $V_{DD,}$ cannot exceed the absolute maximum rating I_{VDD} (see *Table 7*).
- The sum of the currents sunk by all the I/Os on V_{SS} plus the maximum Run consumption of the MCU sunk on V_{SS} cannot exceed the absolute maximum rating I_{VSS} (see *Table 7*).

Output voltage levels

Unless otherwise specified, the parameters given in *Table 36* are derived from tests performed under ambient temperature and V_{DD} supply voltage conditions summarized in *Table 9*. All I/Os are CMOS and TTL compliant.

Table 36. Output voltage characteristics

Symbol	Parameter	Conditions	Min	Max	Unit
V_{OL}(1)	Output low level voltage for an I/O pin when 8 pins are sunk at same time	CMOS port(2), I_{IO} = +8 mA 2.7 V < V_{DD} < 3.6 V	-	0.4	V
V_{OH}(3)	Output high level voltage for an I/O pin when 8 pins are sourced at same time		V_{DD}–0.4	-	
V_{OL} (1)	Output low level voltage for an I/O pin when 8 pins are sunk at same time	TTL port(2) I_{IO} =+ 8mA 2.7 V < V_{DD} < 3.6 V	-	0.4	V
V_{OH} (3)	Output high level voltage for an I/O pin when 8 pins are sourced at same time		2.4	-	
V_{OL}(1)(4)	Output low level voltage for an I/O pin when 8 pins are sunk at same time	I_{IO} = +20 mA 2.7 V < V_{DD} < 3.6 V	-	1.3	V
V_{OH}(3)(4)	Output high level voltage for an I/O pin when 8 pins are sourced at same time		V_{DD}–1.3	-	
V_{OL}(1)(4)	Output low level voltage for an I/O pin when 8 pins are sunk at same time	I_{IO} = +6 mA 2 V < V_{DD} < 2.7 V	-	0.4	V
V_{OH}(3)(4)	Output high level voltage for an I/O pin when 8 pins are sourced at same time		V_{DD}–0.4	-	

1. The I_{IO} current sunk by the device must always respect the absolute maximum rating specified in *Table 7* and the sum of I_{IO} (I/O ports and control pins) must not exceed I_{VSS}.
2. TTL and CMOS outputs are compatible with JEDEC standards JESD36 and JESD52.
3. The I_{IO} current sourced by the device must always respect the absolute maximum rating specified in *Table 7* and the sum of I_{IO} (I/O ports and control pins) must not exceed I_{VDD}.
4. Based on characterization data, not tested in production.

Input/output AC characteristics

The definition and values of input/output AC characteristics are given in *Figure 27* and *Table 37*, respectively.

Unless otherwise specified, the parameters given in *Table 37* are derived from tests performed under the ambient temperature and V_{DD} supply voltage conditions summarized in *Table 9*.

Table 37. I/O AC characteristics(1)

MODEx[1:0] bit value(1)	Symbol	Parameter	Conditions	Min	Max	Unit
10	$f_{max(IO)out}$	Maximum frequency(2)	C_L = 50 pF, V_{DD} = 2 V to 3.6 V	-	2	MHz
	$t_{f(IO)out}$	Output high to low level fall time	C_L = 50 pF, V_{DD} = 2 V to 3.6 V	-	125(3)	ns
	$t_{r(IO)out}$	Output low to high level rise time		-	125(3)	
01	$f_{max(IO)out}$	Maximum frequency(2)	C_L = 50 pF, V_{DD} = 2 V to 3.6 V	-	10	MHz
	$t_{f(IO)out}$	Output high to low level fall time	C_L = 50 pF, V_{DD} = 2 V to 3.6 V	-	25(3)	ns
	$t_{r(IO)out}$	Output low to high level rise time		-	25(3)	
11	$F_{max(IO)out}$	Maximum frequency(2)	C_L = 30 pF, V_{DD} = 2.7 V to 3.6 V	-	50	MHz
			C_L = 50 pF, V_{DD} = 2.7 V to 3.6 V	-	30	MHz
			C_L = 50 pF, V_{DD} = 2 V to 2.7 V	-	20	MHz
	$t_{f(IO)out}$	Output high to low level fall time	C_L = 30 pF, V_{DD} = 2.7 V to 3.6 V	-	5(3)	ns
			C_L = 50 pF, V_{DD} = 2.7 V to 3.6 V	-	8(3)	
			C_L = 50 pF, V_{DD} = 2 V to 2.7 V	-	12(3)	
	$t_{r(IO)out}$	Output low to high level rise time	C_L = 30 pF, V_{DD} = 2.7 V to 3.6 V	-	5(3)	
			C_L = 50 pF, V_{DD} = 2.7 V to 3.6 V	-	8(3)	
			C_L = 50 pF, V_{DD} = 2 V to 2.7 V	-	12(3)	
-	t_{EXTIpw}	Pulse width of external signals detected by the EXTI controller	-	10	-	ns

1. The I/O speed is configured using the MODEx[1:0] bits. Refer to the STM32F10xxx reference manual for a description of GPIO Port configuration register.
2. The maximum frequency is defined in *Figure 27*.
3. Guaranteed by design, not tested in production.

Figure 27. I/O AC characteristics definition

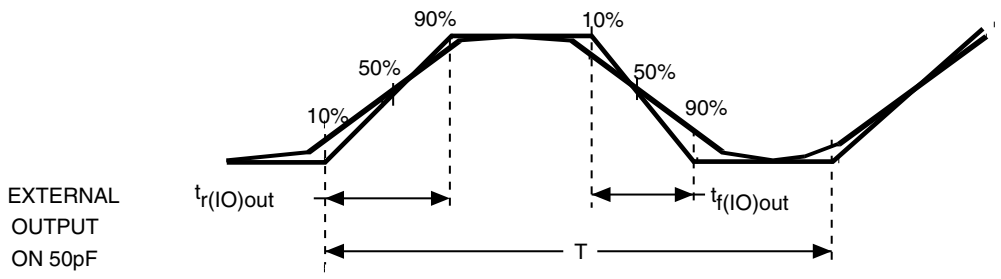

Maximum frequency is achieved if $(t_r + t_f) \leq 2/3)T$ and if the duty cycle is (45-55%) when loaded by 50pF

5.3.14 NRST pin characteristics

The NRST pin input driver uses CMOS technology. It is connected to a permanent pull-up resistor, R_{PU} (see *Table 35*).

Unless otherwise specified, the parameters given in *Table 38* are derived from tests performed under the ambient temperature and V_{DD} supply voltage conditions summarized in *Table 9*.

Table 38. NRST pin characteristics

Symbol	Parameter	Conditions	Min	Typ	Max	Unit
$V_{IL(NRST)}$(1)	NRST Input low level voltage	-	–0.5	-	0.8	V
$V_{IH(NRST)}$(1)	NRST Input high level voltage	-	2	-	V_{DD}+0.5	
$V_{hys(NRST)}$	NRST Schmitt trigger voltage hysteresis	-	-	200	-	mV
R_{PU}	Weak pull-up equivalent resistor(2)	$V_{IN} = V_{SS}$	30	40	50	kΩ
$V_{F(NRST)}$(1)	NRST Input filtered pulse	-	-	-	100	ns
$V_{NF(NRST)}$(1)	NRST Input not filtered pulse	-	300	-	-	ns

1. Guaranteed by design, not tested in production.
2. The pull-up is designed with a true resistance in series with a switchable PMOS. This PMOS contribution to the series resistance must be minimum (~10% order).

Figure 28. Recommended NRST pin protection

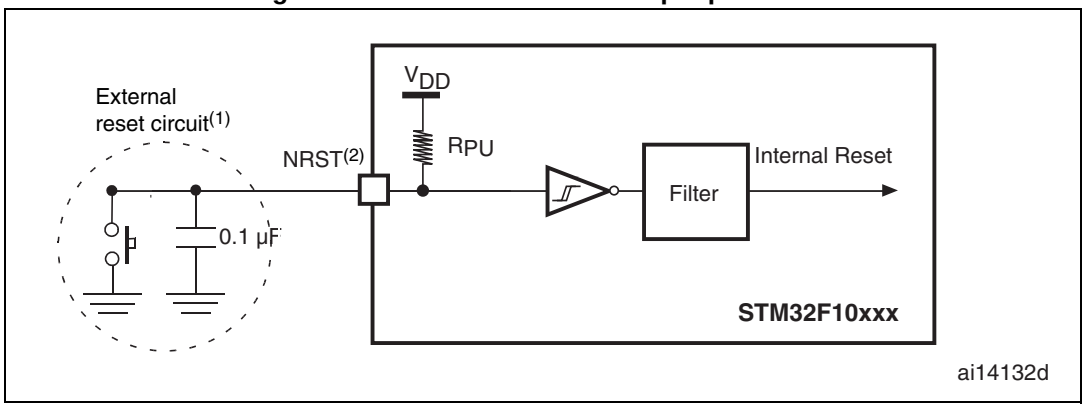

2. The reset network protects the device against parasitic resets.
3. The user must ensure that the level on the NRST pin can go below the $V_{IL(NRST)}$ max level specified in *Table 38*. Otherwise the reset will not be taken into account by the device.

5.3.15 TIM timer characteristics

The parameters given in *Table 39* are guaranteed by design.

Refer to *Section 5.3.12: I/O current injection characteristics* for details on the input/output alternate function characteristics (output compare, input capture, external clock, PWM output).

Table 39. TIMx(1) characteristics

Symbol	Parameter	Conditions	Min	Max	Unit
$t_{res(TIM)}$	Timer resolution time	-	1	-	$t_{TIMxCLK}$
		$f_{TIMxCLK}$ = 72 MHz	13.9	-	ns
f_{EXT}	Timer external clock frequency on CH1 to CH4		0	$f_{TIMxCLK}/2$	MHz
		$f_{TIMxCLK}$ = 72 MHz	0	36	MHz
Res_{TIM}	Timer resolution	-	-	16	bit
$t_{COUNTER}$	16-bit counter clock period when internal clock is selected	-	1	65536	$t_{TIMxCLK}$
		$f_{TIMxCLK}$ = 72 MHz	0.0139	910	µs
t_{MAX_COUNT}	Maximum possible count	-	-	65536 × 65536	$t_{TIMxCLK}$
		$f_{TIMxCLK}$ = 72 MHz	-	59.6	s

1. TIMx is used as a general term to refer to the TIM1, TIM2, TIM3 and TIM4 timers.

5.3.16 Communications interfaces

I²C interface characteristics

The STM32F103xx performance line I²C interface meets the requirements of the standard I²C communication protocol with the following restrictions: the I/O pins SDA and SCL are mapped to are not “true” open-drain. When configured as open-drain, the PMOS connected between the I/O pin and V_{DD} is disabled, but is still present.

The I²C characteristics are described in *Table 40*. Refer also to *Section 5.3.12: I/O current injection characteristics* for more details on the input/output alternate function characteristics (SDA and SCL).

Table 40. I²C characteristics

Symbol	Parameter	Standard mode I²C(1)(2)		Fast mode I²C(1)(2)		Unit
		Min	Max	Min	Max	
$t_{w(SCLL)}$	SCL clock low time	4.7	-	1.3	-	µs
$t_{w(SCLH)}$	SCL clock high time	4.0	-	0.6	-	
$t_{su(SDA)}$	SDA setup time	250	-	100	-	ns
$t_{h(SDA)}$	SDA data hold time	-	3450(3)	-	900(3)	
$t_{r(SDA)}$ $t_{r(SCL)}$	SDA and SCL rise time	-	1000	-	300	
$t_{f(SDA)}$ $t_{f(SCL)}$	SDA and SCL fall time	-	300	-	300	
$t_{h(STA)}$	Start condition hold time	4.0	-	0.6	-	µs
$t_{su(STA)}$	Repeated Start condition setup time	4.7	-	0.6	-	
$t_{su(STO)}$	Stop condition setup time	4.0	-	0.6	-	µs
$t_{w(STO:STA)}$	Stop to Start condition time (bus free)	4.7	-	1.3	-	µs
C_b	Capacitive load for each bus line	-	400	-	400	pF

1. Guaranteed by design, not tested in production.
2. f_{PCLK1} must be at least 2 MHz to achieve standard mode I²C frequencies. It must be at least 4 MHz to achieve fast mode I²C frequencies. It must be a multiple of 10 MHz to reach the 400 kHz maximum I2C fast mode clock.
3. The maximum Data hold time has only to be met if the interface does not stretch the low period of SCL signal.

Figure 29. I²C bus AC waveforms and measurement circuit

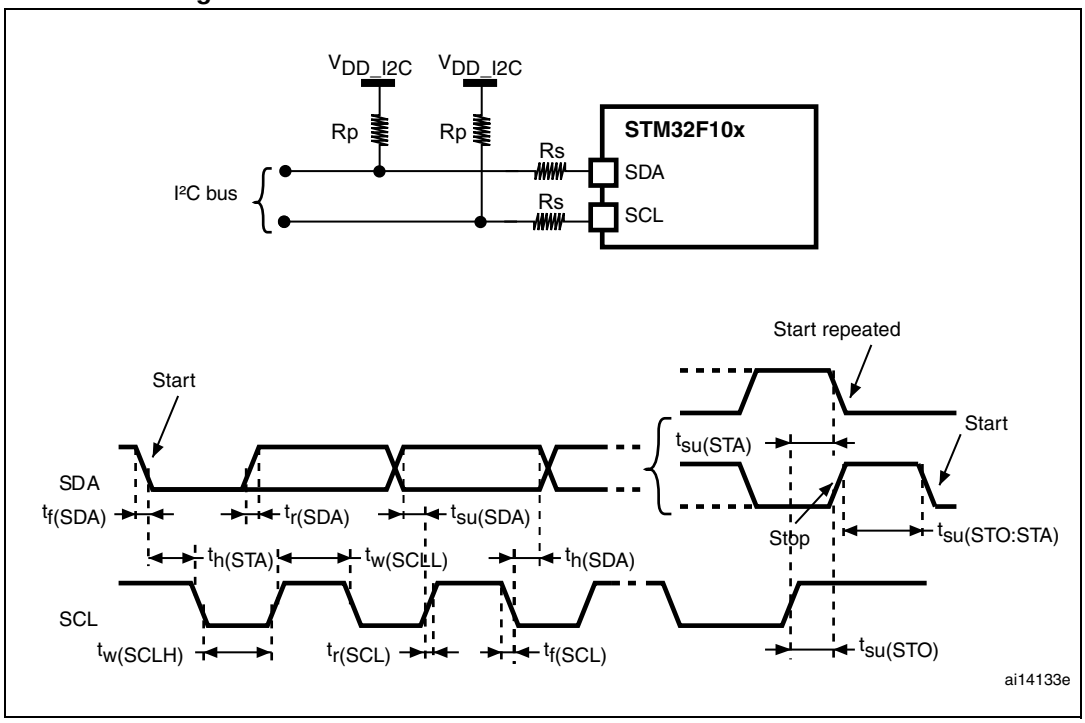

1. Measurement points are done at CMOS levels: $0.3V_{DD}$ and $0.7V_{DD}$.
2. Rs = Series protection resistors, Rp = Pull-up resistors, V_{DD_I2C} = I2C bus supply.

Table 41. SCL frequency (f_{PCLK1}= 36 MHz.,V_{DD_I2C} = 3.3 V)(1)(2)

f_{SCL} (kHz)	I2C_CCR value
	R_P = 4.7 kΩ
400	0x801E
300	0x8028
200	0x803C
100	0x00B4
50	0x0168
20	0x0384

1. R_P = External pull-up resistance, f_{SCL} = I²C speed,
2. For speeds around 200 kHz, the tolerance on the achieved speed is of ±5%. For other speed ranges, the tolerance on the achieved speed ±2%. These variations depend on the accuracy of the external components used to design the application.

SPI interface characteristics

Unless otherwise specified, the parameters given in *Table 42* are derived from tests performed under the ambient temperature, f_{PCLKx} frequency and V_{DD} supply voltage conditions summarized in *Table 9*.

Refer to *Section 5.3.12: I/O current injection characteristics* for more details on the input/output alternate function characteristics (NSS, SCK, MOSI, MISO).

Table 42. SPI characteristics

Symbol	Parameter	Conditions	Min	Max	Unit
f_{SCK} $1/t_{c(SCK)}$	SPI clock frequency	Master mode	-	18	MHz
		Slave mode	-	18	
$t_{r(SCK)}$ $t_{f(SCK)}$	SPI clock rise and fall time	Capacitive load: C = 30 pF		8	ns
DuCy(SCK)	SPI slave input clock duty cycle	Slave mode	30	70	%
$t_{su(NSS)}$(1)	NSS setup time	Slave mode	$4t_{PCLK}$	-	ns
$t_{h(NSS)}$(1)	NSS hold time	Slave mode	$2t_{PCLK}$	-	
$t_{w(SCKH)}$(1) $t_{w(SCKL)}$(1)	SCK high and low time	Master mode, f_{PCLK} = 36 MHz, presc = 4	50	60	
$t_{su(MI)}$(1) $t_{su(SI)}$(1)	Data input setup time	Master mode	5	-	
		Slave mode	5	-	
$t_{h(MI)}$(1)	Data input hold time	Master mode	5	-	
$t_{h(SI)}$(1)		Slave mode	4	-	
$t_{a(SO)}$(1)(2)	Data output access time	Slave mode, f_{PCLK} = 20 MHz	0	$3t_{PCLK}$	
$t_{dis(SO)}$(1)(3)	Data output disable time	Slave mode	2	10	
$t_{v(SO)}$(1)	Data output valid time	Slave mode (after enable edge)	-	25	
$t_{v(MO)}$(1)	Data output valid time	Master mode (after enable edge)	-	5	
$t_{h(SO)}$(1)	Data output hold time	Slave mode (after enable edge)	15	-	
$t_{h(MO)}$(1)		Master mode (after enable edge)	2	-	

1. Based on characterization, not tested in production.
2. Min time is for the minimum time to drive the output and the max time is for the maximum time to validate the data.
3. Min time is for the minimum time to invalidate the output and the max time is for the maximum time to put the data in Hi-Z

Figure 30. SPI timing diagram - slave mode and CPHA = 0

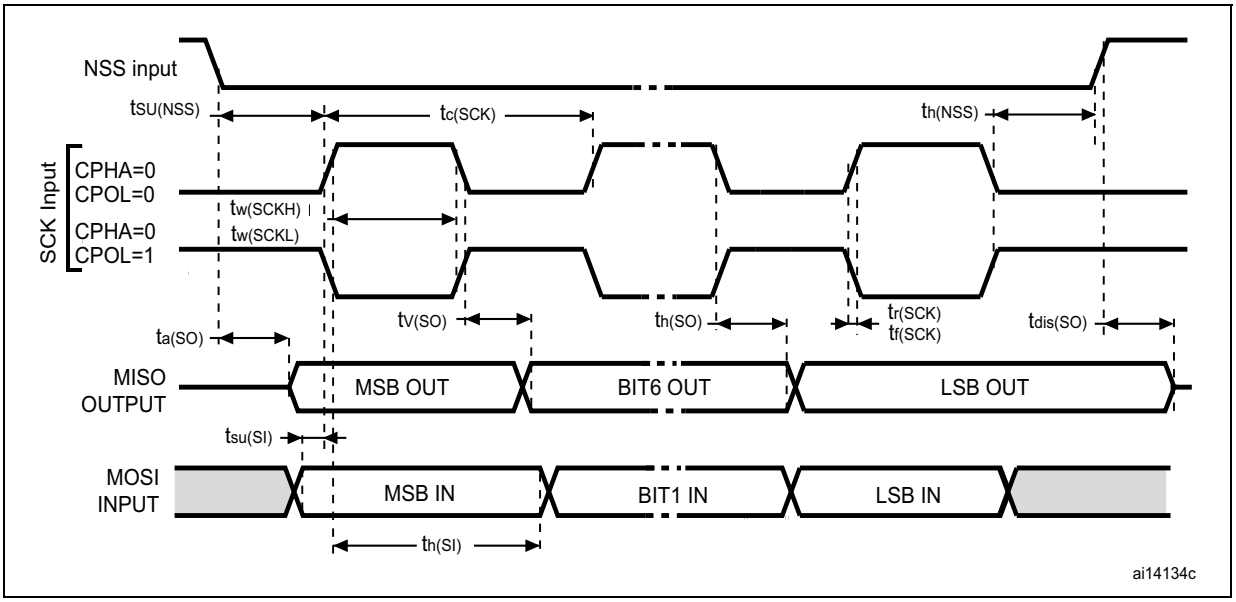

Figure 31. SPI timing diagram - slave mode and CPHA = 1(1)

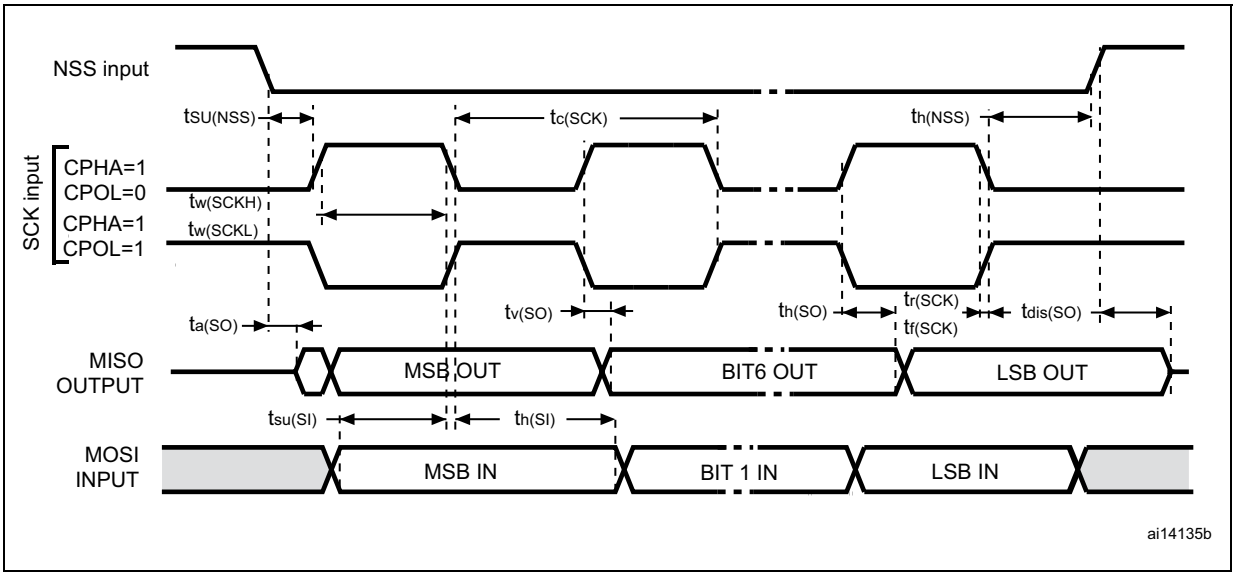

1. Measurement points are done at CMOS levels: $0.3V_{DD}$ and $0.7V_{DD}$.

Figure 32. SPI timing diagram - master mode(1)

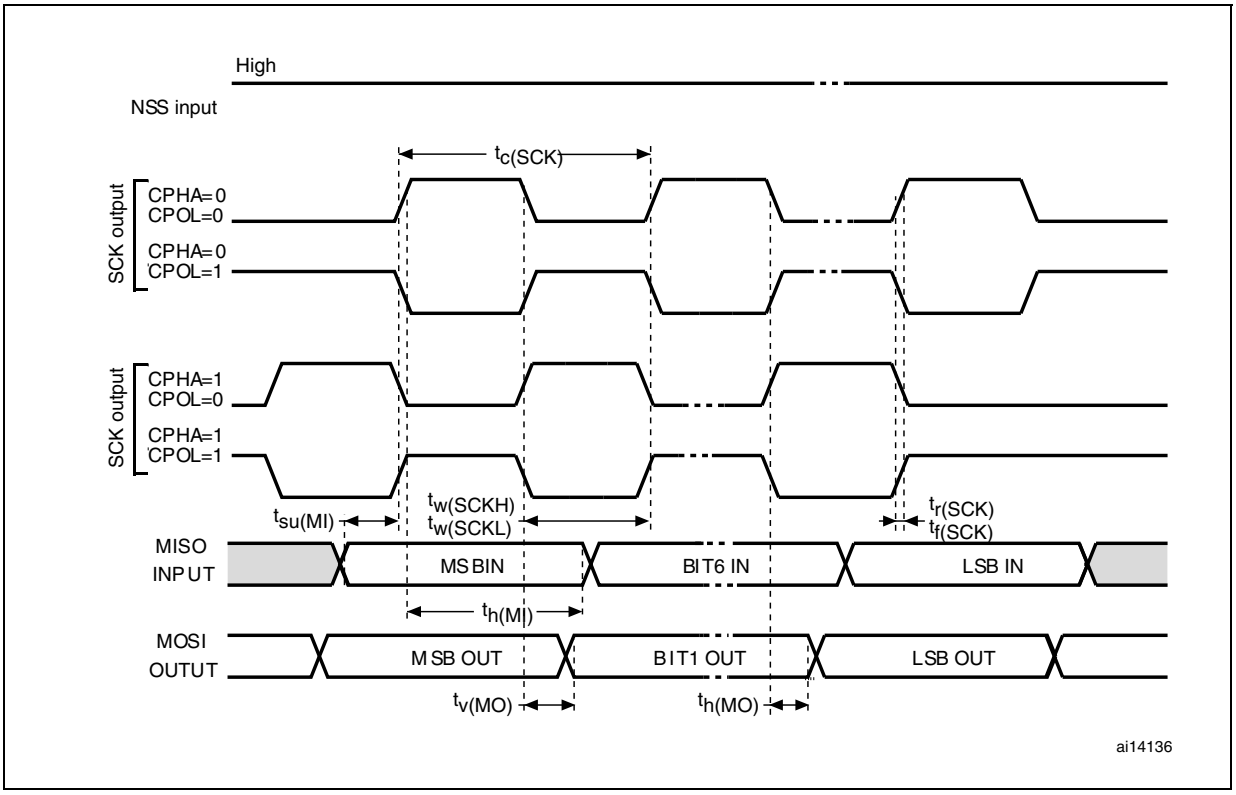

1. Measurement points are done at CMOS levels: $0.3V_{DD}$ and $0.7V_{DD}$.

USB characteristics

The USB interface is USB-IF certified (Full Speed).

Table 43. USB startup time

Symbol	Parameter	Max	Unit
$t_{STARTUP}$(1)	USB transceiver startup time	1	µs

1. Guaranteed by design, not tested in production.

Table 44. USB DC electrical characteristics

Symbol	Parameter	Conditions	Min.(1)	Max.(1)	Unit
Input levels					
V_{DD}	USB operating voltage(2)	-	3.0(3)	3.6	V
V_{DI}(4)	Differential input sensitivity	I(USBDP, USBDM)	0.2	-	V
V_{CM}(4)	Differential common mode range	Includes V_{DI} range	0.8	2.5	
V_{SE}(4)	Single ended receiver threshold	-	1.3	2.0	
Output levels					
V_{OL}	Static output level low	R_L of 1.5 kΩ to 3.6 V(5)	-	0.3	V
V_{OH}	Static output level high	R_L of 15 kΩ to V_{SS}(5)	2.8	3.6	

1. All the voltages are measured from the local ground potential.
2. To be compliant with the USB 2.0 full-speed electrical specification, the USBDP (D+) pin should be pulled up with a 1.5 kΩ resistor to a 3.0-to-3.6 V voltage range.
3. The STM32F103xx USB functionality is ensured down to 2.7 V but not the full USB electrical characteristics which are degraded in the 2.7-to-3.0 V V_{DD} voltage range.
4. Guaranteed by design, not tested in production.
5. R_L is the load connected on the USB drivers

Figure 33. USB timings: definition of data signal rise and fall time

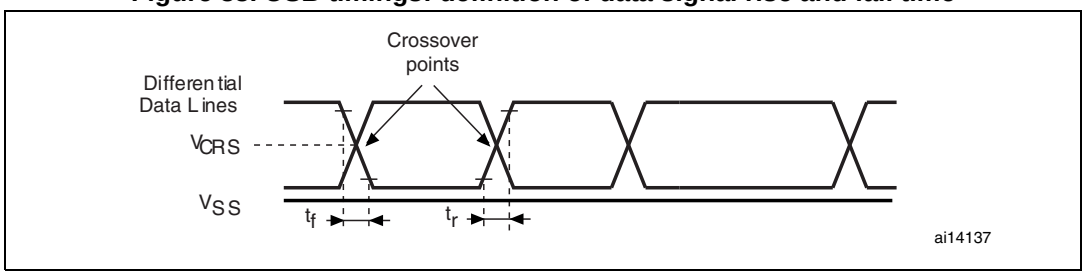

Table 45. USB: Full-speed electrical characteristics(1)

Symbol	Parameter	Conditions	Min	Max	Unit
Driver characteristics					
t_r	Rise time(2)	C_L = 50 pF	4	20	ns
t_f	Fall time(2)	C_L = 50 pF	4	20	ns
t_{rfm}	Rise/ fall time matching	t_r/t_f	90	110	%
V_{CRS}	Output signal crossover voltage	-	1.3	2.0	V

1. Guaranteed by design, not tested in production.
2. Measured from 10% to 90% of the data signal. For more detailed informations, please refer to USB Specification - Chapter 7 (version 2.0).

5.3.17 CAN (controller area network) interface

Refer to *Section 5.3.12: I/O current injection characteristics* for more details on the input/output alternate function characteristics (CAN_TX and CAN_RX).

5.3.18 12-bit ADC characteristics

Unless otherwise specified, the parameters given in *Table 46* are derived from tests performed under the ambient temperature, f_{PCLK2} frequency and V_{DDA} supply voltage conditions summarized in *Table 9*.

Note: It is recommended to perform a calibration after each power-up.

Table 46. ADC characteristics

Symbol	Parameter	Conditions	Min	Typ	Max	Unit
V_{DDA}	Power supply	-	2.4	-	3.6	V
V_{REF+}(3)	Positive reference voltage	-	2.4	-	V_{DDA}	V
I_{VREF}(3)	Current on the V_{REF} input pin	-	-	160(1)	220(1)	µA
f_{ADC}	ADC clock frequency	-	0.6	-	14	MHz
f_S(2)	Sampling rate	-	0.05	-	1	MHz
f_{TRIG}(2)	External trigger frequency	f_{ADC} = 14 MHz	-	-	823	kHz
		-	-	-	17	$1/f_{ADC}$
V_{AIN}(3)	Conversion voltage range	-	0 (V_{SSA} tied to ground)	-	V_{REF+}	V
R_{AIN}(2)	External input impedance	See *Equation 1* and *Table 47* for details	-	-	50	κΩ
R_{ADC}(2)	Sampling switch resistance	-	-	-	1	κΩ
C_{ADC}(2)	Internal sample and hold capacitor	-	-	-	8	pF
t_{CAL}(2)	Calibration time	f_{ADC} = 14 MHz	5.9			µs
		-	83			$1/f_{ADC}$
t_{lat}(2)	Injection trigger conversion latency	f_{ADC} = 14 MHz	-	-	0.214	µs
		-	-	-	3(4)	$1/f_{ADC}$
t_{latr}(2)	Regular trigger conversion latency	f_{ADC} = 14 MHz	-	-	0.143	µs
		-	-	-	2(4)	$1/f_{ADC}$
t_S(2)	Sampling time	f_{ADC} = 14 MHz	0.107	-	17.1	µs
		-	1.5	-	239.5	$1/f_{ADC}$
t_{STAB}(2)	Power-up time	-	0	0	1	µs
t_{CONV}(2)	Total conversion time (including sampling time)	f_{ADC} = 14 MHz	1	-	18	µs
		-	14 to 252 (t_S for sampling +12.5 for successive approximation)			$1/f_{ADC}$

1. Based on characterization, not tested in production.
2. Guaranteed by design, not tested in production.
3. In devices delivered in VFQFPN and LQFP packages, V_{REF+} is internally connected to V_{DDA} and V_{REF-} is internally connected to V_{SSA}. Devices that come in the TFBGA64 package have a V_{REF+} pin but no V_{REF-} pin (V_{REF-} is internally connected to V_{SSA}), see *Table 5* and *Figure 4*.
4. For external triggers, a delay of $1/f_{PCLK2}$ must be added to the latency specified in *Table 46*.

Equation 1: R_{AIN} max formula:

$$R_{AIN} < \frac{T_S}{f_{ADC} \times C_{ADC} \times \ln(2^{N+2})} - R_{ADC}$$

The formula above (*Equation 1*) is used to determine the maximum external impedance allowed for an error below 1/4 of LSB. Here N = 12 (from 12-bit resolution).

Table 47. R_{AIN} max for f_{ADC} = 14 MHz(1)

T_s (cycles)	t_S (µs)	R_{AIN} max (kΩ)
1.5	0.11	0.4
7.5	0.54	5.9
13.5	0.96	11.4
28.5	2.04	25.2
41.5	2.96	37.2
55.5	3.96	50
71.5	5.11	NA
239.5	17.1	NA

1. Based on characterization, not tested in production.

Table 48. ADC accuracy - limited test conditions(1) (2)

Symbol	Parameter	Test conditions	Typ	Max(3)	Unit
ET	Total unadjusted error	f_{PCLK2} = 56 MHz, f_{ADC} = 14 MHz, R_{AIN} < 10 kΩ, V_{DDA} = 3 V to 3.6 V T_A = 25 °C Measurements made after ADC calibration	±1.3	±2	LSB
EO	Offset error		±1	±1.5	
EG	Gain error		±0.5	±1.5	
ED	Differential linearity error		±0.7	±1	
EL	Integral linearity error		±0.8	±1.5	

1. ADC DC accuracy values are measured after internal calibration.
2. ADC Accuracy vs. Negative Injection Current: Injecting a negative current on any analog input pins should be avoided as this significantly reduces the accuracy of the conversion being performed on another analog input. It is recommended to add a Schottky diode (pin to ground) to analog pins which may potentially inject negative currents.
Any positive injection current within the limits specified for $I_{INJ(PIN)}$ and $\Sigma I_{INJ(PIN)}$ in *Section 5.3.12* does not affect the ADC accuracy.
3. Based on characterization, not tested in production.

Table 49. ADC accuracy(1) (2) (3)

Symbol	Parameter	Test conditions	Typ	Max(4)	Unit
ET	Total unadjusted error	f_{PCLK2} = 56 MHz, f_{ADC} = 14 MHz, R_{AIN} < 10 kΩ, V_{DDA} = 2.4 V to 3.6 V Measurements made after ADC calibration	±2	±5	LSB
EO	Offset error		±1.5	±2.5	
EG	Gain error		±1.5	±3	
ED	Differential linearity error		±1	±2	
EL	Integral linearity error		±1.5	±3	

1. ADC DC accuracy values are measured after internal calibration.
2. Better performance could be achieved in restricted V_{DD}, frequency and temperature ranges.
3. ADC Accuracy vs. Negative Injection Current: Injecting negative current on any of the standard (non-robust) analog input pins should be avoided as this significantly reduces the accuracy of the conversion being performed on another analog input. It is recommended to add a Schottky diode (pin to ground) to standard analog pins which may potentially inject negative current.
Any positive injection current within the limits specified for $I_{INJ(PIN)}$ and $\Sigma I_{INJ(PIN)}$ in *Section 5.3.12* does not affect the ADC accuracy.
4. Based on characterization, not tested in production.

Figure 34. ADC accuracy characteristics

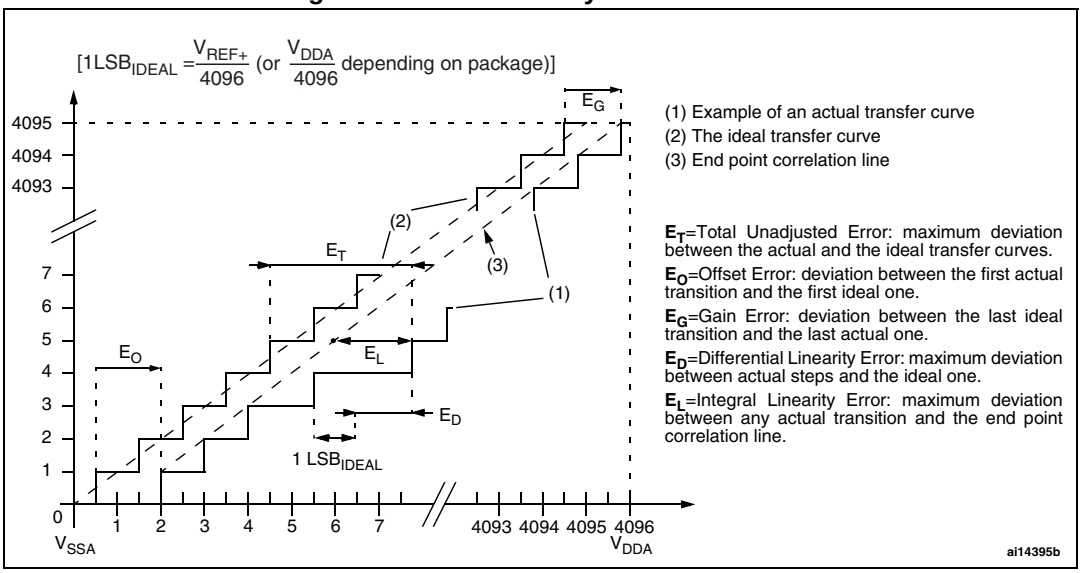

Figure 35. Typical connection diagram using the ADC

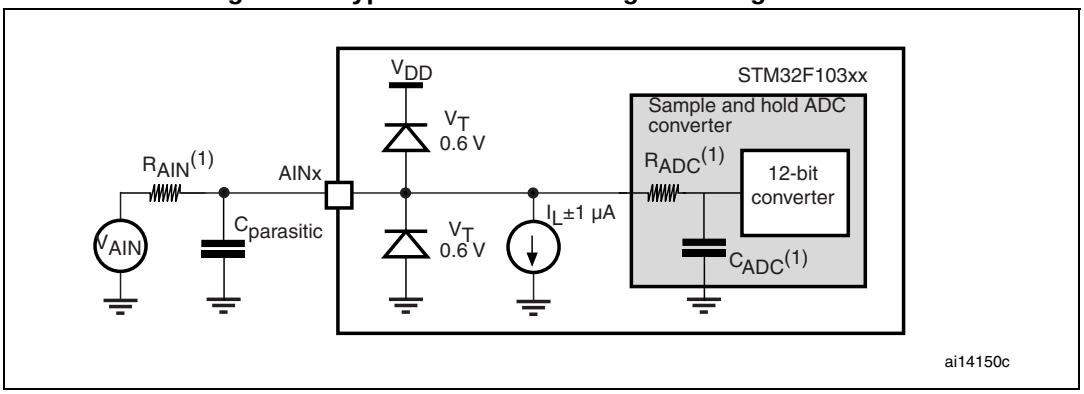

1. Refer to *Table 46* for the values of R_{AIN}, R_{ADC} and C_{ADC}.
2. $C_{parasitic}$ represents the capacitance of the PCB (dependent on soldering and PCB layout quality) plus the pad capacitance (roughly 7 pF). A high $C_{parasitic}$ value will downgrade conversion accuracy. To remedy this, f_{ADC} should be reduced.

General PCB design guidelines

Power supply decoupling should be performed as shown in*Figure 36* or *Figure 37*, depending on whether V_{REF+} is connected to V_{DDA} or not. The 10 nF capacitors should be ceramic (good quality). They should be placed them as close as possible to the chip.

Figure 36. Power supply and reference decoupling (V_{REF+} not connected to V_{DDA})

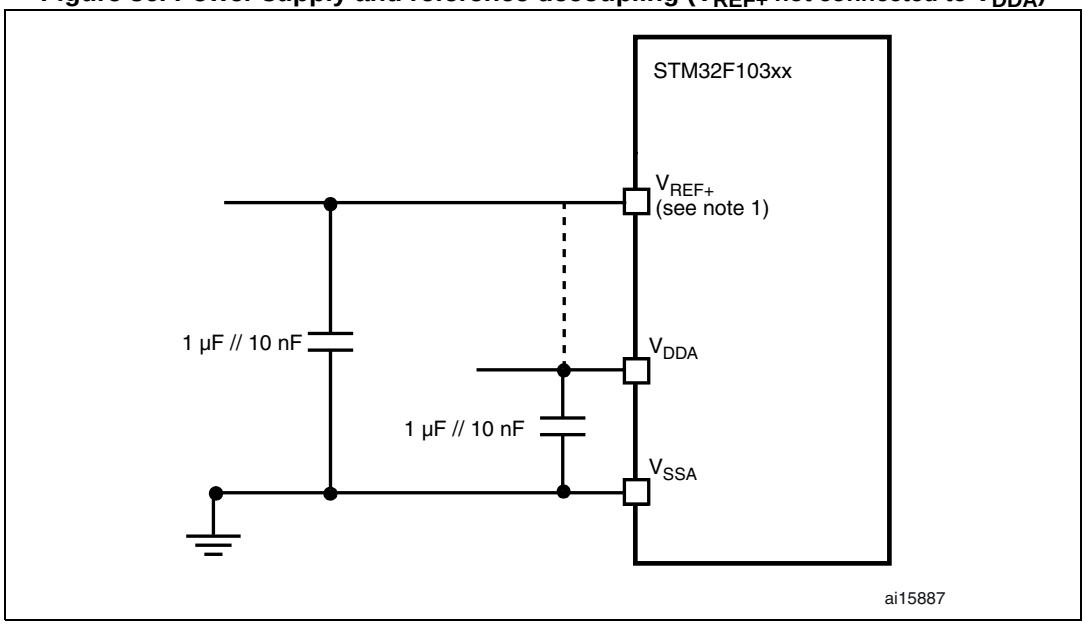

1. The V_{REF+} input is available only on the TFBGA64 package.

Figure 37. Power supply and reference decoupling(V_{REF+} connected to V_{DDA})

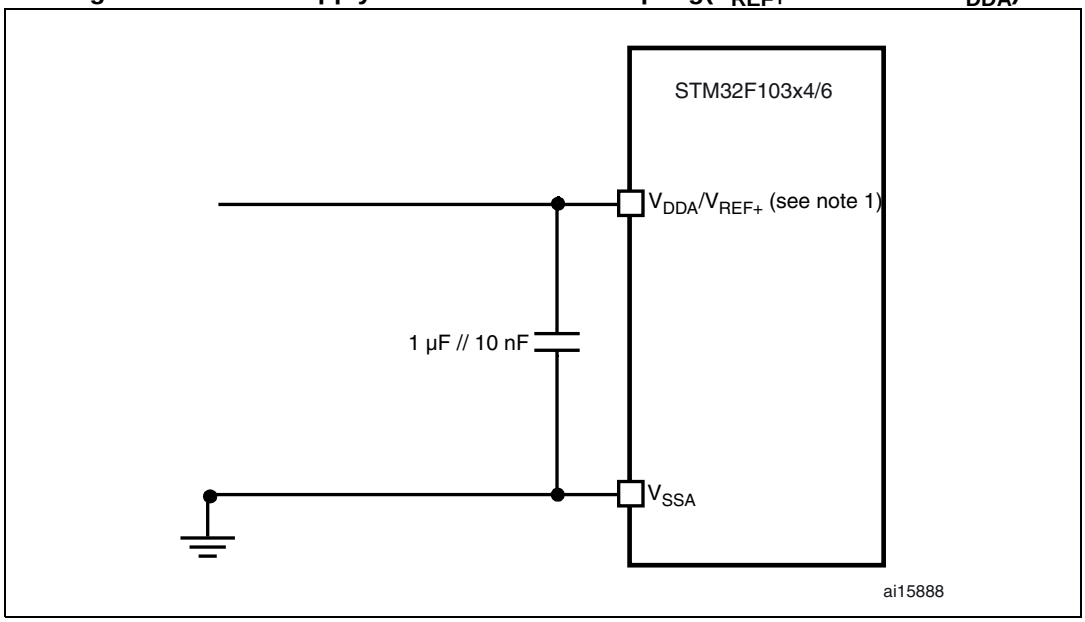

1. The V_{REF+} input is available only on the TFBGA64 package.

5.3.19 Temperature sensor characteristics

Table 50. TS characteristics

Symbol	Parameter	Min	Typ	Max	Unit
T_L(1)	V_{SENSE} linearity with temperature	-	±1	±2	°C
Avg_Slope(1)	Average slope	4.0	4.3	4.6	mV/°C
V_{25}(1)	Voltage at 25 °C	1.34	1.43	1.52	V
t_{START}(2)	Startup time	4	-	10	µs
T_{S_temp}(3)(2)	ADC sampling time when reading the temperature	-	-	17.1	µs

1. Based on characterization, not tested in production.
2. Guaranteed by design, not tested in production.
3. Shortest sampling time can be determined in the application by multiple iterations.

6 Package information

In order to meet environmental requirements, ST offers these devices in different grades of ECOPACK® packages, depending on their level of environmental compliance. ECOPACK® specifications, grade definitions and product status are available at: *www.st.com*. ECOPACK® is an ST trademark.

6.1 VFQFPN36 Package

Figure 38. VFQFPN36 - 36-pin, 6x6 mm, 0.5 mm pitch very thin profile fine pitch quad flat package outline

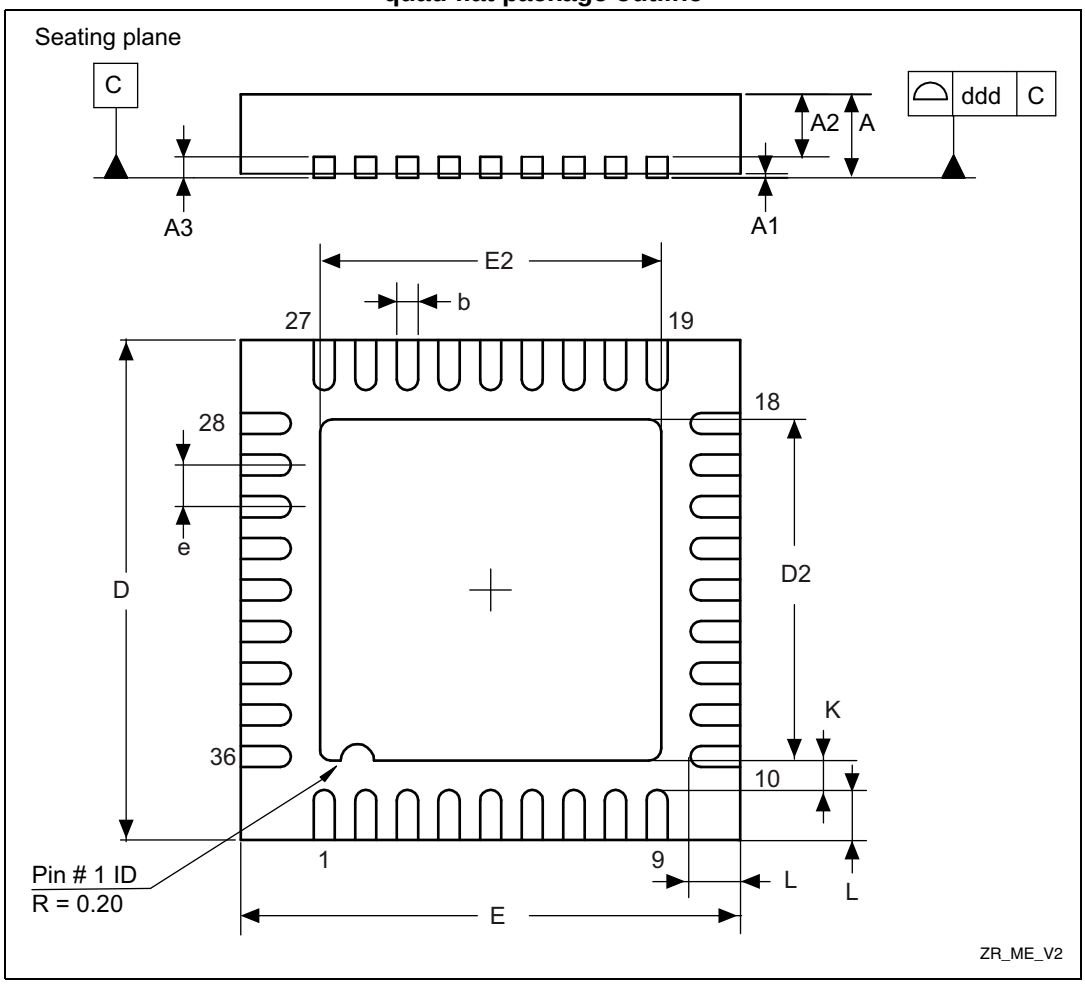

1. Drawing is not to scale.

Table 51. VFQFPN36 - 36-pin, 6x6 mm, 0.5 mm pitch very thin profile fine pitch quad flat package mechanical data

Symbol	millimeters			inches[1]		
	Min	Typ	Max	Min	Typ	Max
A	0.800	0.900	1.000	0.0315	0.0354	0.0394
A1	-	0.020	0.050	-	0.0008	0.0020
A2	-	0.650	1.000	-	0.0256	0.0394
A3	-	0.200	-	-	0.0079	-
b	0.180	0.230	0.300	0.0071	0.0091	0.0118
D	5.875	6.000	6.125	0.2313	0.2362	0.2411
D2	1.750	3.700	4.250	0.0689	0.1457	0.1673
E	5.875	6.000	6.125	0.2313	0.2362	0.2411
E2	1.750	3.700	4.250	0.0689	0.1457	0.1673
e	0.450	0.500	0.550	0.0177	0.0197	0.0217
L	0.350	0.550	0.750	0.0138	0.0217	0.0295
K	0.250	-	-	0.0098	-	-
ddd	-	-	0.080	-	-	0.0031

1. Values in inches are converted from mm and rounded to 4 decimal digits.

Figure 39. VFQFPN36 - 36-pin, 6x6 mm, 0.5 mm pitch very thin profile fine pitch quad flat package recommended footprint

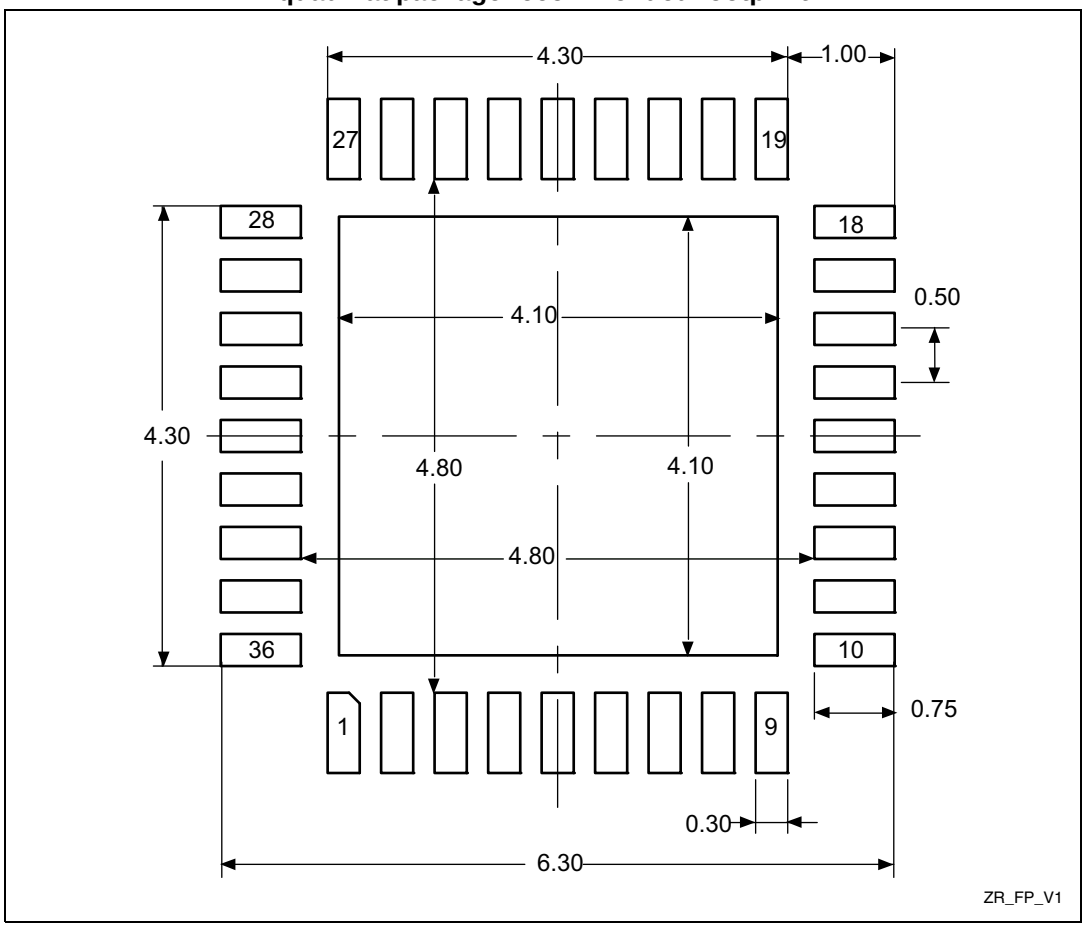

1. Dimensions are expressed in millimeters.

Device Marking for VFQFPN36

The following figure gives an example of topside marking orientation versus ball 1 identifier location.

Figure 40. VFQFPN36 marking example (package view)

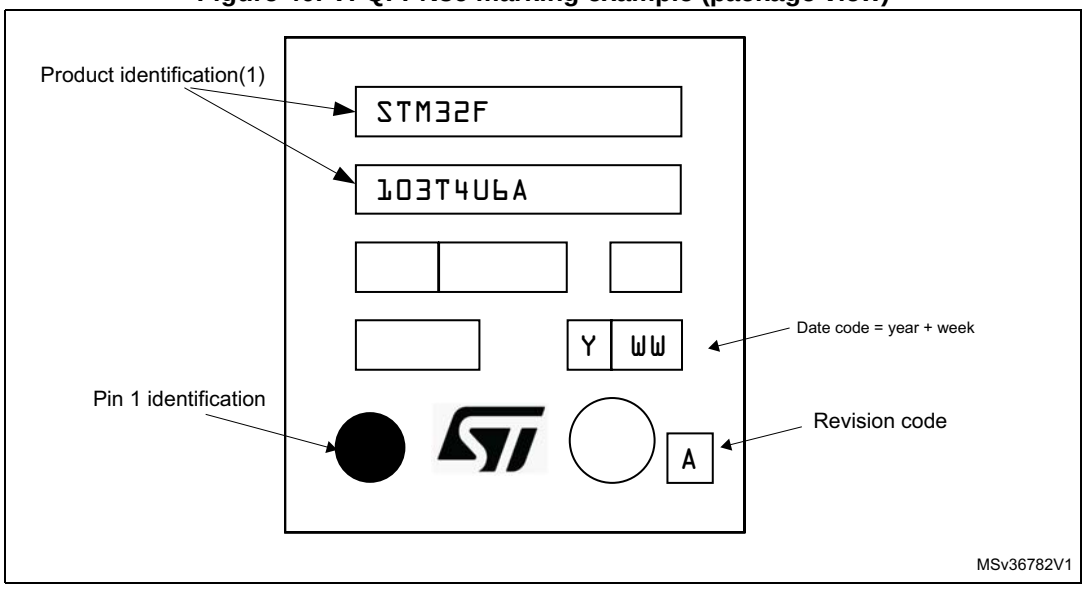

1. Parts marked as “ES”, “E” or accompanied by an Engineering Sample notification letter, are not yet qualified and therefore not yet ready to be used in production and any consequences deriving from such usage will not be at ST charge. In no event, ST will be liable for any customer usage of these engineering samples in production. ST Quality has to be contacted prior to any decision to use these Engineering samples to run qualification activity.

6.2 UFQFPN48 package information

Figure 41. UFQFPN48 - 48-lead, 7x7 mm, 0.5 mm pitch, ultra thin fine pitch quad flat package outline

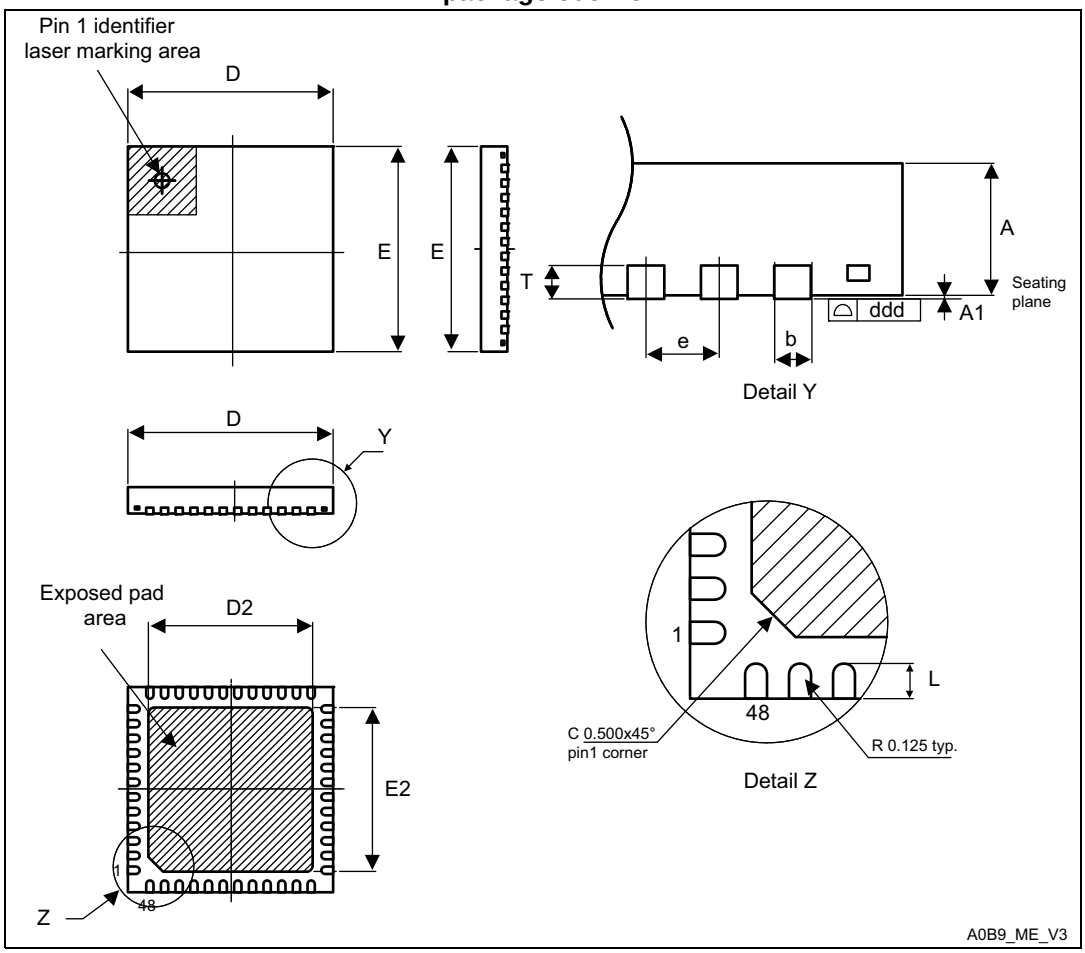

1. Drawing is not to scale.
2. All leads/pads should also be soldered to the PCB to improve the lead/pad solder joint life.
3. There is an exposed die pad on the underside of the UFQFPN package. It is recommended to connect and solder this back-side pad to PCB ground.

Table 52. UFQFPN48 - 48-lead, 7x7 mm, 0.5 mm pitch, ultra thin fine pitch quad flat package mechanical data

Symbol	millimeters			inches(1)		
	Min	Typ	Max	Min	Typ	Max
A	0.500	0.550	0.600	0.0197	0.0217	0.0236
A1	0.000	0.020	0.050	0.0000	0.0008	0.0020
D	6.900	7.000	7.100	0.2717	0.2756	0.2795
E	6.900	7.000	7.100	0.2717	0.2756	0.2795
D2	5.500	5.600	5.700	0.2165	0.2205	0.2244
E2	5.500	5.600	5.700	0.2165	0.2205	0.2244
L	0.300	0.400	0.500	0.0118	0.0157	0.0197
T	-	0.152	-	-	0.0060	-
b	0.200	0.250	0.300	0.0079	0.0098	0.0118
e	-	0.500	-	-	0.0197	-
ddd	-	-	0.080	-	-	0.0031

1. Values in inches are converted from mm and rounded to 4 decimal digits.

Figure 42. UFQFPN48 - 48-lead, 7x7 mm, 0.5 mm pitch, ultra thin fine pitch quad flat package recommended footprint

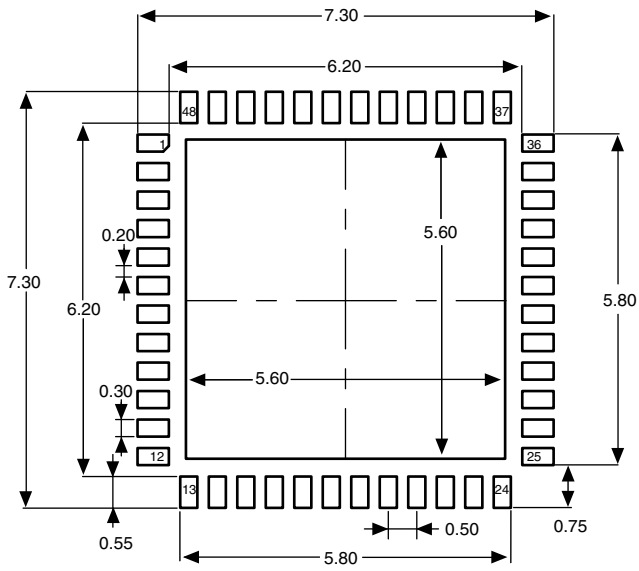

1. Dimensions are expressed in millimeters.

Device Marking for UFQFPN48

The following figure gives an example of topside marking orientation versus ball 1 identifier location.

Figure 43. UFQFPN48 marking example (package view

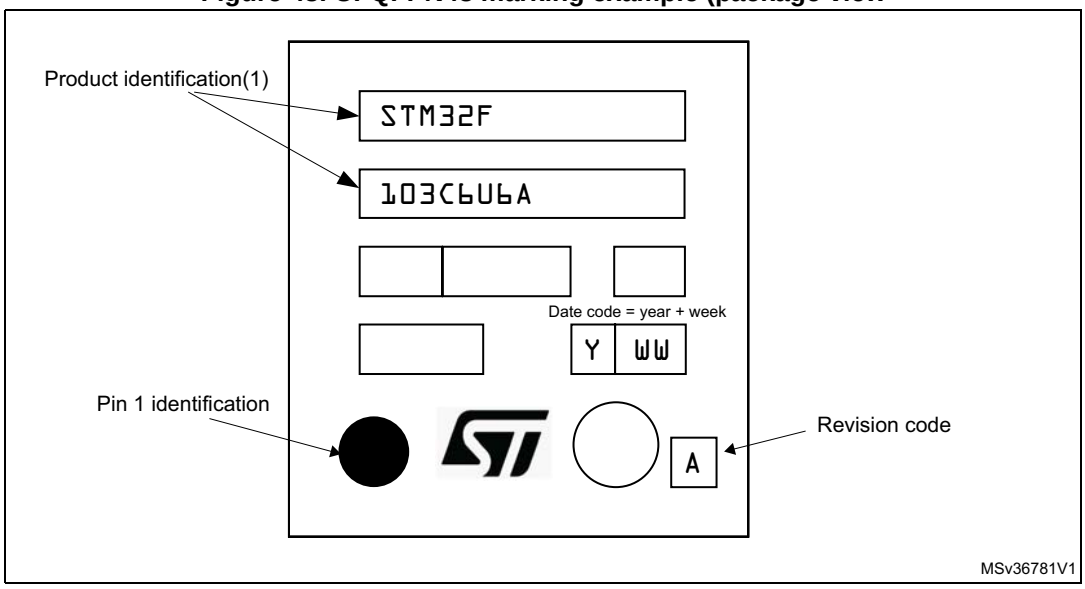

1. Parts marked as “ES”, “E” or accompanied by an Engineering Sample notification letter, are not yet qualified and therefore not yet ready to be used in production and any consequences deriving from such usage will not be at ST charge. In no event, ST will be liable for any customer usage of these engineering samples in production. ST Quality has to be contacted prior to any decision to use these Engineering samples to run qualification activity.

6.3 LQFP64 package information

Figure 44. LQFP64 - 64-pin, 10 x 10 mm low-profile quad flat package outline

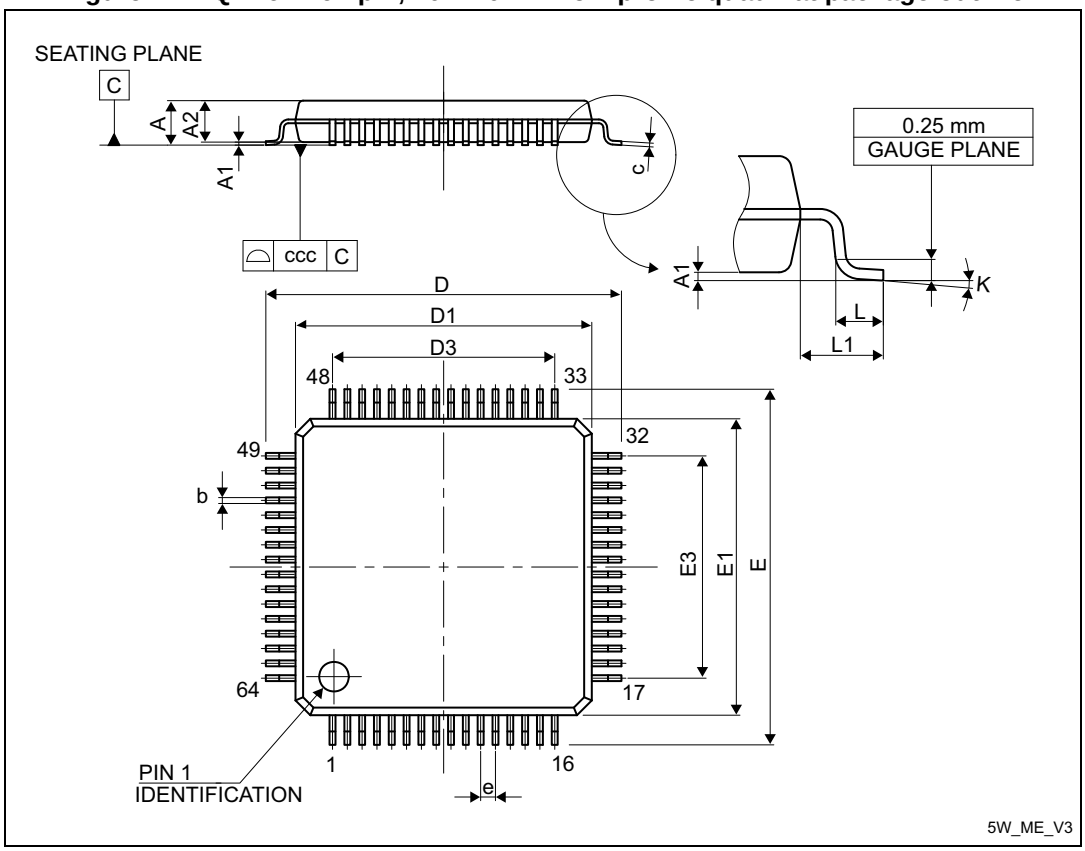

1. Drawing is not to scale.

Table 53. LQFP64 - 64-pin, 10 x 10 mm low-profile quad flat package mechanical data

Symbol	millimeters			inches(1)		
	Min	Typ	Max	Min	Typ	Max
A	-	-	1.600	-	-	0.0630
A1	0.050	-	0.150	0.0020	-	0.0059
A2	1.350	1.400	1.450	0.0531	0.0551	0.0571
b	0.170	0.220	0.270	0.0067	0.0087	0.0106
c	0.090	-	0.200	0.0035	-	0.0079
D	-	12.000	-	-	0.4724	-
D1	-	10.000	-	-	0.3937	-
D3	-	7.500	-	-	0.2953	-
E	-	12.000	-	-	0.4724	-
E1	-	10.000	-	-	0.3937	-

Table 53. LQFP64 - 64-pin, 10 x 10 mm low-profile quad flat package mechanical data (continued)

Symbol	millimeters			inches[1]		
	Min	Typ	Max	Min	Typ	Max
E3	-	7.500	-	-	0.2953	-
e	-	0.500	-	-	0.0197	-
K	0°	3.5°	7°	0°	3.5°	7°
L	0.450	0.600	0.750	0.0177	0.0236	0.0295
L1	-	1.000	-	-	0.0394	-
ccc	-	-	0.080	-	-	0.0031

1. Values in inches are converted from mm and rounded to 4 decimal digits.

Figure 45. LQFP64 - 64-pin, 10 x 10 mm low-profile quad flat package recommended footprint

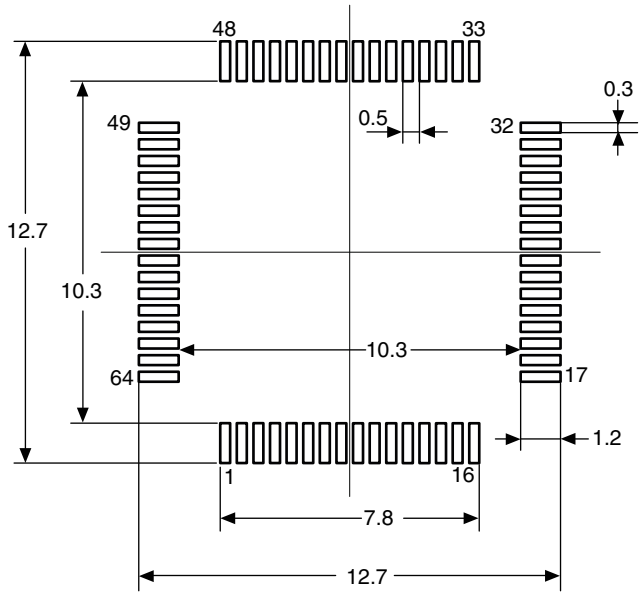

1. Dimensions are expressed in millimeters.

Device Marking for LQFP64

The following figure gives an example of topside marking orientation versus ball 1 identifier location.

Figure 46. LQFP64 marking example (package view

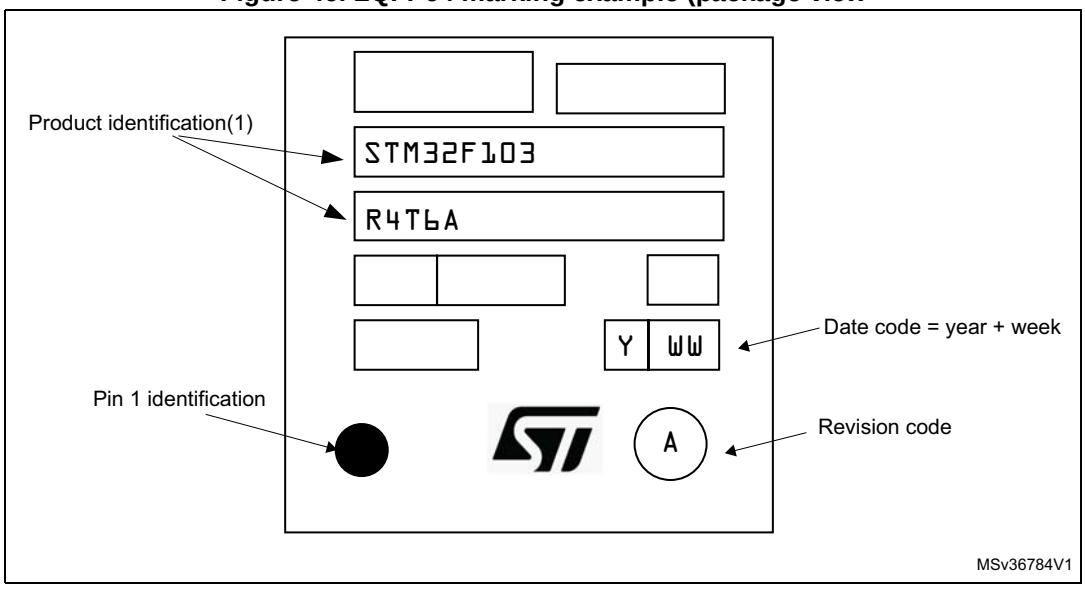

1. Parts marked as “ES”, “E” or accompanied by an Engineering Sample notification letter, are not yet qualified and therefore not yet ready to be used in production and any consequences deriving from such usage will not be at ST charge. In no event, ST will be liable for any customer usage of these engineering samples in production. ST Quality has to be contacted prior to any decision to use these Engineering samples to run qualification activity.

6.4 TFBGA64 package information

Figure 47. TFBGA64 – 64-ball, 5 x 5 mm, 0.5 mm pitch thin profile fine pitch ball grid array package outline

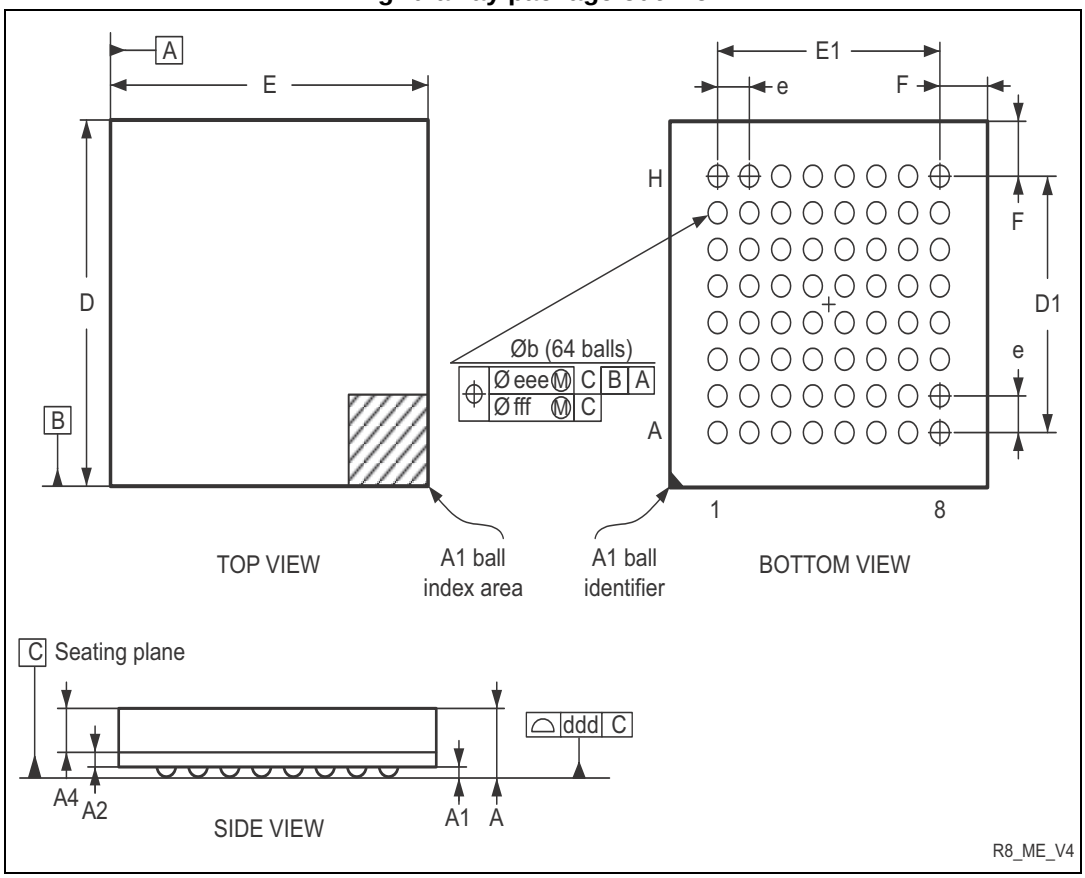

1. Drawing is not to scale.

Table 54. TFBGA64 – 64-ball, 5 x 5 mm, 0.5 mm pitch, thin profile fine pitch ball grid array package mechanical data

Symbol	millimeters			inches(1)		
	Min	Typ	Max	Min	Typ	Max
A	-	-	1.200	-	-	0.0472
A1	0.150	-	-	0.0059	-	-
A2	-	0.200	-	-	0.0079	-
A4	-	-	0.600	-	-	0.0236
b	0.250	0.300	0.350	0.0098	0.0118	0.0138
D	4.850	5.000	5.150	0.1909	0.1969	0.2028
D1	-	3.500	-	-	0.1378	-
E	4.850	5.000	5.150	0.1909	0.1969	0.2028
E1	-	3.500	-	-	0.1378	-

Table 54. TFBGA64 – 64-ball, 5 x 5 mm, 0.5 mm pitch, thin profile fine pitch ball grid array package mechanical data (continued)

Symbol	millimeters			inches[1]		
	Min	Typ	Max	Min	Typ	Max
e	-	0.500	-	-	0.0197	-
F	-	0.750	-	-	0.0295	-
ddd	-	-	0.080	-	-	0.0031
eee	-	-	0.150	-	-	0.0059
fff	-	-	0.050	-	-	0.0020

1. Values in inches are converted from mm and rounded to 4 decimal digits.

Figure 48. TFBGA64 – 64-ball, 5 x 5 mm, 0.5 mm pitch, thin profile fine pitch ball grid array, recommended footprint

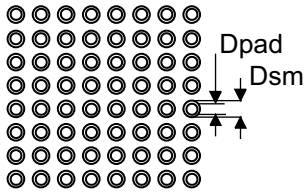

Table 55. TFBGA64 recommended PCB design rules (0.5 mm pitch BGA)

Dimension	Recommended values
Pitch	0.5
Dpad	0.280 mm
Dsm	0.370 mm typ. (depends on the soldermask registration tolerance)
Stencil opening	0.280 mm
Stencil thickness	Between 0.100 mm and 1.125 mm
Pad trace width	0.100 mm

Device Marking for TFBGA64

The following figure gives an example of topside marking orientation versus ball 1 identifier location.

Figure 49. TFBGA64 marking example (package view

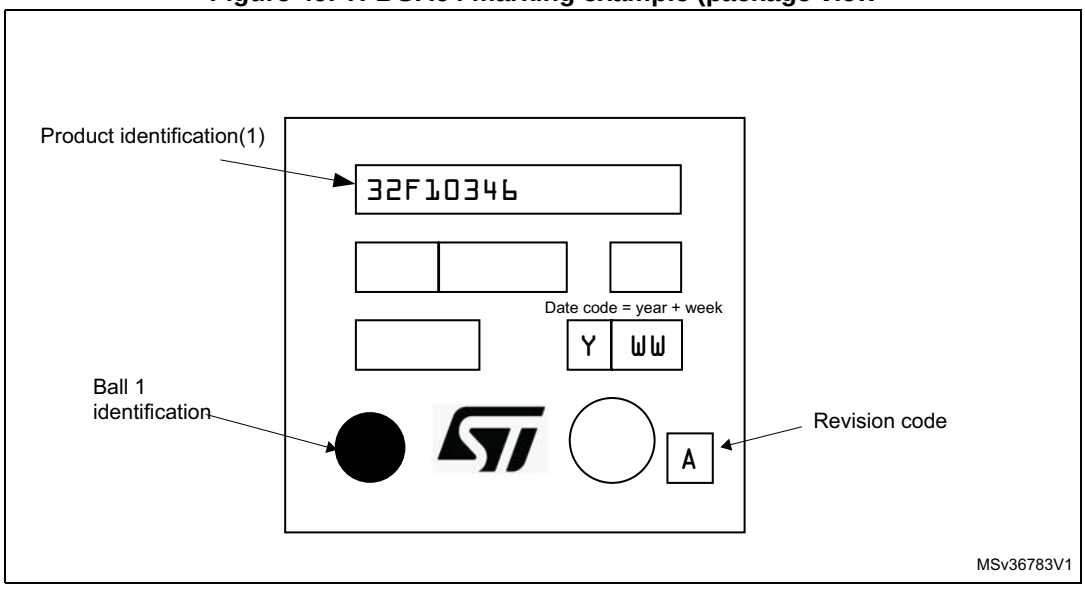

1. Parts marked as “ES”, “E” or accompanied by an Engineering Sample notification letter, are not yet qualified and therefore not yet ready to be used in production and any consequences deriving from such usage will not be at ST charge. In no event, ST will be liable for any customer usage of these engineering samples in production. ST Quality has to be contacted prior to any decision to use these Engineering samples to run qualification activity.

6.5 LQFP48 package information

Figure 50. LQFP48 - 48-pin, 7 x 7 mm low-profile quad flat package outline

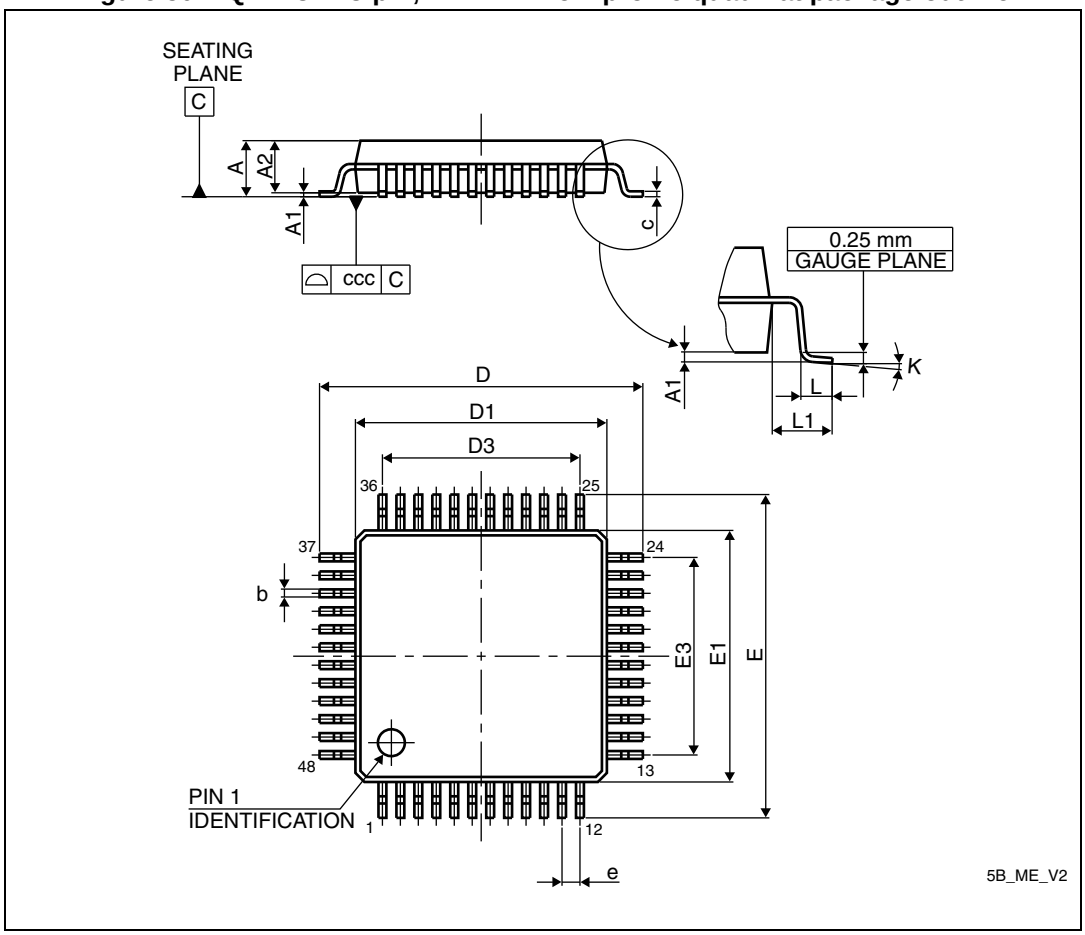

1. Drawing is not to scale.

Table 56. LQFP48 - 48-pin, 7 x 7 mm low-profile quad flat package mechanical data

Symbol	millimeters			inches[1]		
	Min	Typ	Max	Min	Typ	Max
A	-	-	1.600	-	-	0.0630
A1	0.050	-	0.150	0.0020	-	0.0059
A2	1.350	1.400	1.450	0.0531	0.0551	0.0571
b	0.170	0.220	0.270	0.0067	0.0087	0.0106
c	0.090	-	0.200	0.0035	-	0.0079
D	8.800	9.000	9.200	0.3465	0.3543	0.3622
D1	6.800	7.000	7.200	0.2677	0.2756	0.2835
D3	-	5.500	-	-	0.2165	-
E	8.800	9.000	9.200	0.3465	0.3543	0.3622
E1	6.800	7.000	7.200	0.2677	0.2756	0.2835
E3	-	5.500	-	-	0.2165	-
e	-	0.500	-	-	0.0197	-
L	0.450	0.600	0.750	0.0177	0.0236	0.0295
L1	-	1.000	-	-	0.0394	-
k	0°	3.5°	7°	0°	3.5°	7°
ccc	-	-	0.080	-	-	0.0031

1. Values in inches are converted from mm and rounded to 4 decimal digits.

Figure 51. LQFP48 - 48-pin, 7 x 7 mm low-profile quad flat package recommended footprint

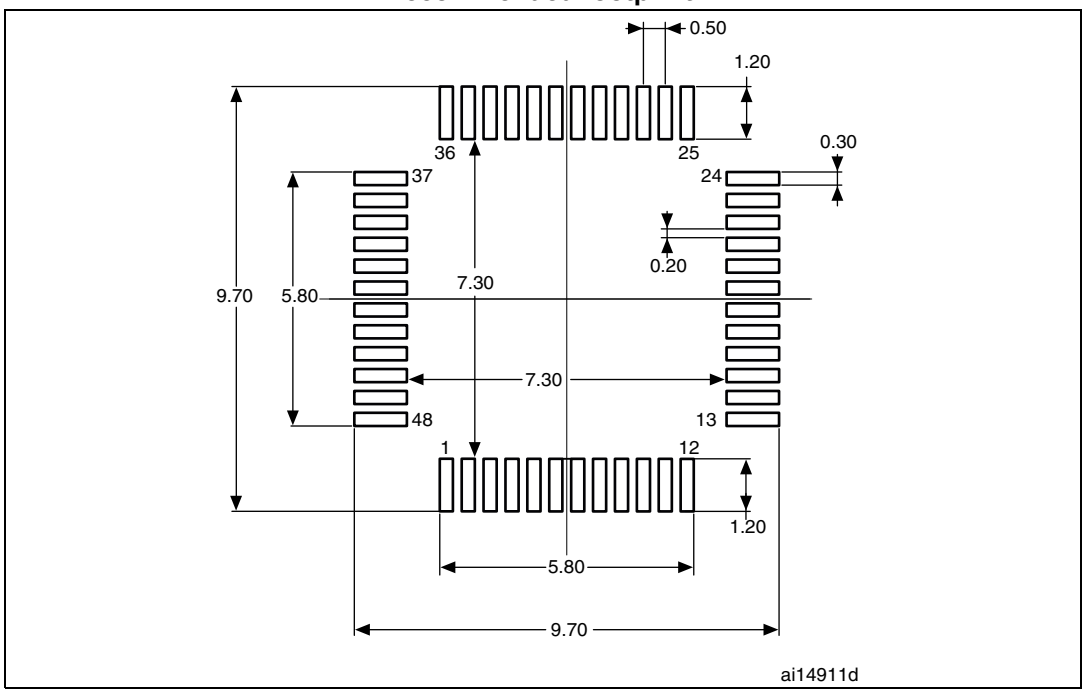

1. Dimensions are expressed in millimeters.

Device Marking for LQFP48

The following figure gives an example of topside marking orientation versus ball 1 identifier location.

Figure 52. LQFP48 marking example (package view

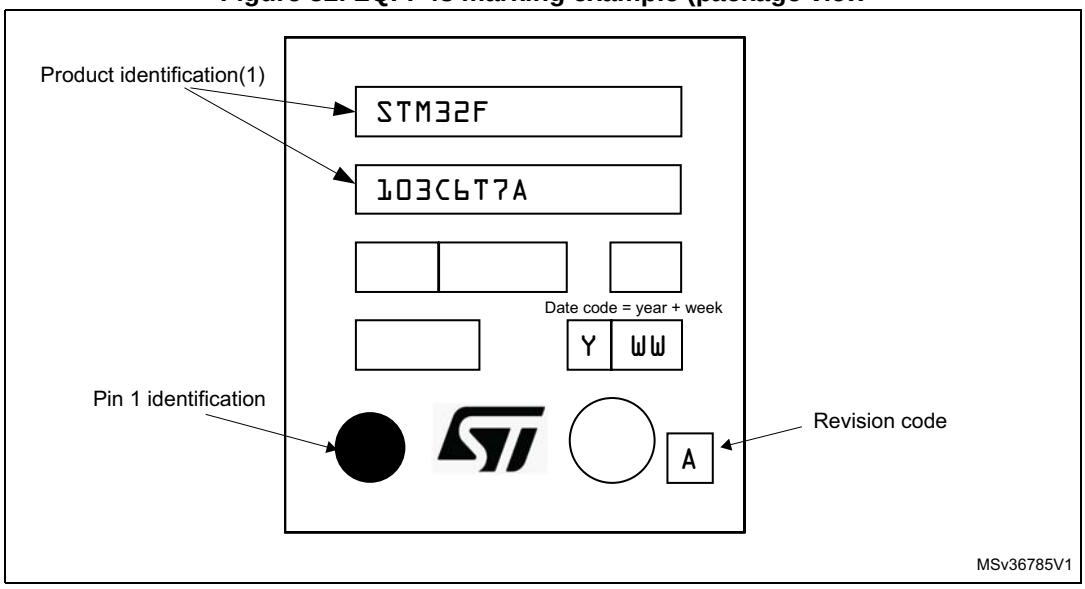

1. Parts marked as “ES”, “E” or accompanied by an Engineering Sample notification letter, are not yet qualified and therefore not yet ready to be used in production and any consequences deriving from such usage will not be at ST charge. In no event, ST will be liable for any customer usage of these engineering samples in production. ST Quality has to be contacted prior to any decision to use these Engineering samples to run qualification activity.

6.6 Thermal characteristics

The maximum chip junction temperature ($T_J$max) must never exceed the values given in *Table 9: General operating conditions on page 33*.

The maximum chip-junction temperature, T_J max, in degrees Celsius, may be calculated using the following equation:

T_J max = T_A max + (P_D max × Θ_{JA})

Where:

- T_A max is the maximum ambient temperature in °C,
- Θ_{JA} is the package junction-to-ambient thermal resistance, in °C/W,
- P_D max is the sum of P_{INT} max and $P_{I/O}$ max (P_D max = P_{INT} max + $P_{I/O}$max),
- P_{INT} max is the product of I_{DD} and V_{DD}, expressed in Watts. This is the maximum chip internal power.

$P_{I/O}$ max represents the maximum power dissipation on output pins where:

$$P_{I/O} \text{ max} = \Sigma (V_{OL} \times I_{OL}) + \Sigma((V_{DD} - V_{OH}) \times I_{OH}),$$

taking into account the actual V_{OL} / I_{OL} and V_{OH} / I_{OH} of the I/Os at low and high level in the application.

Table 57. Package thermal characteristics

Symbol	Parameter	Value	Unit
Θ_{JA}	Thermal resistance junction-ambient TFBGA64 - 5 × 5 mm / 0.5 mm pitch	65	°C/W
	Thermal resistance junction-ambient LQFP64 - 10 × 10 mm / 0.5 mm pitch	45	
	Thermal resistance junction-ambient LQFP48 - 7 × 7 mm / 0.5 mm pitch	55	
	Thermal resistance junction-ambient UFQFPN 48 -7 × 7 mm / 0.5 mm pitch	32	
	Thermal resistance junction-ambient VFQFPN 36 - 6 × 6 mm / 0.5 mm pitch	18	

6.6.1 Reference document

JESD51-2 Integrated Circuits Thermal Test Method Environment Conditions - Natural Convection (Still Air). Available from www.jedec.org.

6.6.2 Selecting the product temperature range

When ordering the microcontroller, the temperature range is specified in the ordering information scheme shown in *Table 58: Ordering information scheme*.

Each temperature range suffix corresponds to a specific guaranteed ambient temperature at maximum dissipation and, to a specific maximum junction temperature.

As applications do not commonly use the STM32F103xx at maximum dissipation, it is useful to calculate the exact power consumption and junction temperature to determine which temperature range will be best suited to the application.

The following examples show how to calculate the temperature range needed for a given application.

Example 1: High-performance application

Assuming the following application conditions:

Maximum ambient temperature T_{Amax} = 82 °C (measured according to JESD51-2), I_{DDmax} = 50 mA, V_{DD} = 3.5 V, maximum 20 I/Os used at the same time in output at low level with I_{OL} = 8 mA, V_{OL}= 0.4 V and maximum 8 I/Os used at the same time in output at low level with I_{OL} = 20 mA, V_{OL}= 1.3 V

$P_{INTmax} = 50 \text{ mA} \times 3.5 \text{ V} = 175 \text{ mW}$

$P_{IOmax} = 20 \times 8 \text{ mA} \times 0.4 \text{ V} + 8 \times 20 \text{ mA} \times 1.3 \text{ V} = 272 \text{ mW}$

This gives: P_{INTmax} = 175 mW and P_{IOmax} = 272 mW:

$P_{Dmax} = 175 + 272 = 447 \text{ mW}$

Thus: P_{Dmax} = 447 mW

Using the values obtained in *Table 57* T_{Jmax} is calculated as follows:

– For LQFP64, 45 °C/W

$T_{Jmax} = 82 \text{ °C} + (45 \text{ °C/W} \times 447 \text{ mW}) = 82 \text{ °C} + 20.115 \text{ °C} = 102.115 \text{ °C}$

This is within the range of the suffix 6 version parts (–40 < T_J < 105 °C).

In this case, parts must be ordered at least with the temperature range suffix 6 (see *Table 58: Ordering information scheme*).

Example 2: High-temperature application

Using the same rules, it is possible to address applications that run at high ambient temperatures with a low dissipation, as long as junction temperature T_J remains within the specified range.

Assuming the following application conditions:

Maximum ambient temperature T_{Amax} = 115 °C (measured according to JESD51-2), I_{DDmax} = 20 mA, V_{DD} = 3.5 V, maximum 20 I/Os used at the same time in output at low level with I_{OL} = 8 mA, V_{OL}= 0.4 V

$P_{INTmax} = 20 \text{ mA} \times 3.5 \text{ V} = 70 \text{ mW}$

$P_{IOmax} = 20 \times 8 \text{ mA} \times 0.4 \text{ V} = 64 \text{ mW}$

This gives: P_{INTmax} = 70 mW and P_{IOmax} = 64 mW:

$P_{Dmax} = 70 + 64 = 134 \text{ mW}$

Thus: P_{Dmax} = 134 mW

Using the values obtained in *Table 57* T_{Jmax} is calculated as follows:

– For LQFP64, 45 °C/W

T_{Jmax} = 115 °C + (45 °C/W × 134 mW) = 115 °C + 6.03 °C = 121.03 °C

This is within the range of the suffix 7 version parts (–40 < T_J < 125 °C).

In this case, parts must be ordered at least with the temperature range suffix 7 (see *Table 58: Ordering information scheme*).

Figure 53. LQFP64 P_D max vs. T_A

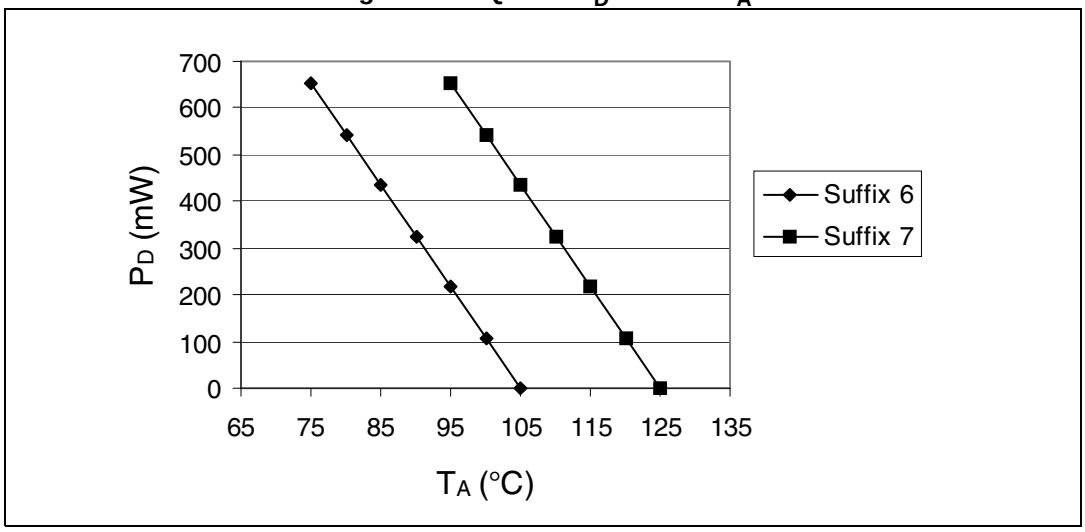

7 Ordering information scheme

Table 58. Ordering information scheme

Example: STM32 F 103 C 4 T 7 A xxx

Device family

STM32 = ARM®-based 32-bit microcontroller

Product type

F = general-purpose

Device subfamily

103 = performance line

Pin count

T = 36 pins

C = 48 pins

R = 64 pins

Flash memory size

4 = 16 Kbytes of Flash memory

6 = 32 Kbytes of Flash memory

Package

H = BGA

T = LQFP

U = VFQFPN or UFQFPN

Temperature range

6 = Industrial temperature range, –40 to 85 °C.

7 = Industrial temperature range, –40 to 105 °C.

Internal code

“A” or blank

Options

xxx = programmed parts

TR = tape and real

For a list of available options (speed, package, etc.) or for further information on any aspect of this device, please contact your nearest ST sales office.

8 Revision history

Table 59. Document revision history

Date	Revision	Changes
22-Sep-2008	1	Initial release.
30-Mar-2009	2	"96-bit unique ID" feature added and I/O information clarified *on page 1*. Timers specified *on page 1* (Motor control capability mentioned). *Table 4: Timer feature comparison* added. PB4, PB13, PB14, PB15, PB3/TRACESWO moved from Default column to Remap column, plus small additional changes in *Table 5: Low-density STM32F103xx pin definitions*. *Figure 8: Memory map* modified. References to V_{REF-} removed: – *Figure 1: STM32F103xx performance line block diagram* modified, – *Figure 11: Power supply scheme* modified – *Figure 34: ADC accuracy characteristics* modified – Note modified in *Table 49: ADC accuracy*. *Table 20: High-speed external user clock characteristics* and *Table 21: Low-speed external user clock characteristics* modified. Note modified in *Table 13: Maximum current consumption in Run mode, code with data processing running from Flash* and *Table 15: Maximum current consumption in Sleep mode, code running from Flash or RAM*. *Figure 17* shows a typical curve (title modified). ACC_{HSI} max values modified in *Table 24: HSI oscillator characteristics*. TFBGA64 package added (see *Table 54* and *Table 47*). Small text changes.
24-Sep-2009	3	*Note 5* updated and *Note 4* added in *Table 5: Low-density STM32F103xx pin definitions*. V_{RERINT} and T_{Coeff} added to *Table 12: Embedded internal reference voltage*. Typical I_{DD_VBAT} value added in *Table 16: Typical and maximum current consumptions in Stop and Standby modes*. *Figure 15: Typical current consumption on V_{BAT} with RTC on versus temperature at different V_{BAT} values* added. f_{HSE_ext} min modified in *Table 20: High-speed external user clock characteristics*. C_{L1} and C_{L2} replaced by C in *Table 22: HSE 4-16 MHz oscillator characteristics* and *Table 23: LSE oscillator characteristics (f_{LSE} = 32.768 kHz)*, notes modified and moved below the tables. *Table 24: HSI oscillator characteristics* modified. Conditions removed from *Table 26: Low-power mode wakeup timings*. *Note 1* modified below *Figure 21: Typical application with an 8 MHz crystal*. *Figure 28: Recommended NRST pin protection* modified. Jitter added to *Table 27: PLL characteristics on page 52*. IEC 1000 standard updated to IEC 61000 and SAE J1752/3 updated to IEC 61967-2 in *Section 5.3.10: EMC characteristics on page 53*. C_{ADC} and R_{AIN} parameters modified in *Table 46: ADC characteristics*. R_{AIN} max values modified in *Table 47: R_{AIN} max for f_{ADC} = 14 MHz*. Small text changes.

Table 59. Document revision history (continued)

Date	Revision	Changes
20-May-2010	4	Added VFQFPN48 package. Updated note 2 below *Table 40: I^2C characteristics* Updated *Figure 29: I^2C bus AC waveforms and measurement circuit* Updated *Figure 28: Recommended NRST pin protection* Updated *Section 5.3.12: I/O current injection characteristics*
19-Apr-2011	5	Updated footnotes below *Table 6: Voltage characteristics on page 32* and *Table 7: Current characteristics on page 33* Updated tw min in *Table 20: High-speed external user clock characteristics on page 46* Updated startup time in *Table 23: LSE oscillator characteristics (f_{LSE} = 32.768 kHz) on page 49* Added *Section 5.3.12: I/O current injection characteristics* Updated *Section 5.3.13: I/O port characteristics*

Table 59. Document revision history (continued)

Date	Revision	Changes
14-May-2013	6	Replaced VQFN48 package with UQFN48 in cover page packages, *Table 2: STM32F103xx low-density device features and peripheral counts*, *Figure 6: STM32F103xx performance line UFQFPN48 pinout*, *Table 5: Low-density STM32F103xx pin definitions*, *Table 58: Ordering information scheme*, updated *Table 9: General operating conditions*, updated *Table 57: Package thermal characteristics*, added *Figure 41: UFQFPN48 7 x 7 mm, 0.5 mm pitch, package outline* and *Table 52: UFQFPN48 7 x 7 mm, 0.5 mm pitch, package mechanical data* Added footnote for TFBGA ADC channels in *Table 2: STM32F103xx low-density device features and peripheral counts* Updated 'All GPIOs are high current...' in *Section 2.3.21: GPIOs (general-purpose inputs/outputs)* Updated *Table 5: Low-density STM32F103xx pin definitions* Corrected Sigma letter in *Section 5.1.1: Minimum and maximum values* Updated *Table 7: Current characteristics* Added 'V_{IN}' in *Table 9: General operating conditions* Removed the first sentence in *Section 5.3.16: Communications interfaces* Updated first sentence in *Output driving current* Added note *5.* in *Table 24: HSI oscillator characteristics* Updated 'V_{IL}' and 'V_{IH}' in *Table 35: I/O static characteristics* Added notes to *Figure 23: Standard I/O input characteristics - CMOS port*, *Figure 24: Standard I/O input characteristics - TTL port*, *Figure 25: 5 V tolerant I/O input characteristics - CMOS port* and *Figure 26: 5 V tolerant I/O input characteristics - TTL port* Updated *Figure 29: I^2C bus AC waveforms and measurement circuit* Updated note *2.* and *3.*,removed note "the device must internally..." in *Table 40: I^2C characteristics* Updated title of *Table 41: SCL frequency (f_{PCLK1}= 36 MHz.,V_{DD_I2C} = 3.3 V)* Updated note *2.* in *Table 49: ADC accuracy* Updated *Figure 47: TFBGA64 - 8 x 8 active ball array, 5 x 5 mm, 0.5 mm pitch, package outline* and *Table 54: TFBGA64 - 8 x 8 active ball array, 5 x 5 mm, 0.5 mm pitch, package mechanical data*
01-June-2015	7	Added: – Package's marking pictures(*Figure 40*, *Figure 43*, *Figure 46*, *Figure 49*, *Figure 52*) Updated: – *Table 40: I^2C characteristics* – *Section 6: Package information*

IMPORTANT NOTICE – PLEASE READ CAREFULLY

STMicroelectronics NV and its subsidiaries (“ST”) reserve the right to make changes, corrections, enhancements, modifications, and improvements to ST products and/or to this document at any time without notice. Purchasers should obtain the latest relevant information on ST products before placing orders. ST products are sold pursuant to ST’s terms and conditions of sale in place at the time of order acknowledgement.

Purchasers are solely responsible for the choice, selection, and use of ST products and ST assumes no liability for application assistance or the design of Purchasers’ products.

No license, express or implied, to any intellectual property right is granted by ST herein.

Resale of ST products with provisions different from the information set forth herein shall void any warranty granted by ST for such product.

ST and the ST logo are trademarks of ST. All other product or service names are the property of their respective owners.

Information in this document supersedes and replaces information previously supplied in any prior versions of this document.

© 2015 STMicroelectronics – All rights reserved