STM32F446xC/E

ARM® Cortex®-M4 32b MCU+FPU, 225DMIPS, up to 512kB Flash/128+4KB RAM, USB OTG HS/FS, 17 TIMs, 3 ADCs, 20 comm. interfaces

Datasheet - production data

Features

- Core: ARM® 32-bit Cortex®-M4 CPU with FPU, Adaptive real-time accelerator (ART Accelerator™) allowing 0-wait state execution from Fl ash memory, frequency up to 180 MHz, MPU, 225 DMIPS/1.25 DMIPS/MHz (Dhrystone 2.1), and DSP instructions
- Memories
  - 512 kB of Flash memory
  - 128 KB of SRAM
  - Flexible external memory controller with up to 16-bit data bus: SRAM,PSRAM,SDRAM/LPSDR SDRAM, Flash NOR/NAND memories
  - Dual mode Quad SPI interface
- LCD parallel interface, 8080/6800 modes
- Clock, reset and supply management
  - 1.7 V to 3.6 V application supply and I/Os
  - POR, PDR, PVD and BOR
  - 4-to-26 MHz crystal oscillator
  - Internal 16 MHz factory-trimmed RC (1% accuracy)
  - 32 kHz oscillator for RTC with calibration
  - Internal 32 kHz RC with calibration
- Low power
  - Sleep, Stop and Standby modes
  - V_{BAT} supply for RTC, 20×32 bit backup registers + optional 4 KB backup SRAM
- 3×12-bit, 2.4 MSPS ADC: up to 24 channels and 7.2 MSPS in triple interleaved mode
- 2×12-bit D/A converters
- General-purpose DMA: 16-stream DMA controller with FIFOs and burst support
- Up to 17 timers: 2x watchdog, 1x SysTick timer and up to twelve 16-bit and two 32-bit timers up to 180 MHz, each with up to 4 IC/OC/PWM or pulse counter
- Debug mode
  - SWD & JTAG interfaces
  - Cortex®-M4 Trace Macrocell™

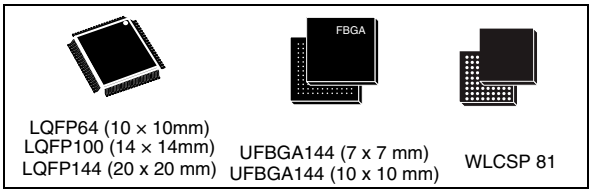

- Up to 114 I/O ports with interrupt capability
  - Up to 111 fast I/Os up to 90 MHz
  - Up to 112 5 V-tolerant I/Os
- Up to 20 communication interfaces
  - SPDIF-Rx
  - Up to 4 × I^2C interfaces (SMBus/PMBus)
  - Up to 4 USARTs/2 UARTs (11.25 Mbit/s, ISO7816 interface, LIN, IrDA, modem control)
  - Up to 4 SPIs (45 Mbits/s), 3 with muxed I^2S for audio class accuracy via internal audio PLL or external clock
  - 2 x SAI (serial audio interface)
  - 2 × CAN (2.0B Active)
  - SDIO interface
  - Consumer electronics control (CEC) I/F
- Advanced connectivity
  - USB 2.0 full-speed device/host/OTG controller with on-chip PHY
  - USB 2.0 high-speed/full-speed device/host/OTG controller with dedicated DMA, on-chip full-speed PHY and ULPI
  - Dedicated USB power rail enabling on-chip PHYs operation throughout the entire MCU power supply range
- 8- to 14-bit parallel camera interface up to 54 Mbytes/s
- CRC calculation unit
- RTC: subsecond accuracy, hardware calendar
- 96-bit unique ID

Table 1. Device summary

Reference	Part number
STM32F446xC/E	STM32F446MC, STM32F446ME, STM32F446RC, STM32F446RE, STM32F446VC, STM32F446VE, STM32F446ZC, STM32F446ZE.

This is information on a product in full production. www.st.com

Contents

1 Introduction 11

2 Description 12

2.1 Compatibility with STM32F4 family 14

3 Functional overview 17

3.1 ARM® Cortex®-M4 with FPU and embedded Flash and SRAM 17

3.2 Adaptive real-time memory accelerator (ART Accelerator™) 17

3.3 Memory protection unit 17

3.4 Embedded Flash memory 18

3.5 CRC (cyclic redundancy check) calculation unit 18

3.6 Embedded SRAM 18

3.7 Multi-AHB bus matrix 18

3.8 DMA controller (DMA) 19

3.9 Flexible memory controller (FMC) 20

3.10 Quad SPI memory interface (QUADSPI) 20

3.11 Nested vectored interrupt controller (NVIC) 21

3.12 External interrupt/event controller (EXTI) 21

3.13 Clocks and startup 21

3.14 Boot modes 22

3.15 Power supply schemes 22

3.16 Power supply supervisor 23

3.16.1 Internal reset ON 23

3.16.2 Internal reset OFF 23

3.17 Voltage regulator 24

3.17.1 Regulator ON 24

3.17.2 Regulator OFF 25

3.17.3 Regulator ON/OFF and internal reset ON/OFF availability 27

3.18 Real-time clock (RTC), backup SRAM and backup registers 28

3.19 Low-power modes 29

3.20 V_{BAT} operation 29

3.21 Timers and watchdogs 31

3.21.1 Advanced-control timers (TIM1, TIM8) 32
3.21.2 General-purpose timers (TIMx) 32
3.21.3 Basic timers TIM6 and TIM7 32
3.21.4 Independent watchdog 33
3.21.5 Window watchdog 33
3.21.6 SysTick timer 33
3.22 Inter-integrated circuit interface (I^2C) 33
3.23 Universal synchronous/asynchronous receiver transmitters (USART) . . 34
3.24 Serial peripheral interface (SPI) 34
3.25 HDMI (high-definition multimedia interface) consumer electronics control (CEC) 35
3.26 Inter-integrated sound (I^2S) 35
3.27 SPDIF-RX Receiver Interface (SPDIFRX) 35
3.28 Serial Audio interface (SAI) 36
3.29 Audio PLL (PLLI2S) 36
3.30 Serial Audio Interface PLL(PLLSAI) 36
3.31 Secure digital input/output interface (SDIO) 36
3.32 Controller area network (bxCAN) 37
3.33 Universal serial bus on-the-go full-speed (OTG_FS) 37
3.34 Universal serial bus on-the-go high-speed (OTG_HS) 37
3.35 Digital camera interface (DCMI) 38
3.36 General-purpose input/outputs (GPIOs) 38
3.37 Analog-to-digital converters (ADCs) 38
3.38 Temperature sensor 39
3.39 Digital-to-analog converter (DAC) 39
3.40 Serial wire JTAG debug port (SWJ-DP) 39
3.41 Embedded Trace Macrocell™ 40

4 Pinout and pin description 41

5 Memory mapping 67

6 Electrical characteristics 72
6.1 Parameter conditions 72
6.1.1 Minimum and maximum values 72

6.1.2 Typical values . . . 72
6.1.3 Typical curves . . . 72
6.1.4 Loading capacitor . . . 72
6.1.5 Pin input voltage . . . 72
6.1.6 Power supply scheme . . . 73
6.1.7 Current consumption measurement . . . 74
6.2 Absolute maximum ratings . . . 74
6.3 Operating conditions . . . 76
6.3.1 General operating conditions . . . 76
6.3.2 VCAP_1/VCAP_2 external capacitor . . . 78
6.3.3 Operating conditions at power-up / power-down (regulator ON) . . . 79
6.3.4 Operating conditions at power-up / power-down (regulator OFF) . . . 79
6.3.5 Reset and power control block characteristics . . . 80
6.3.6 Over-drive switching characteristics . . . 81
6.3.7 Supply current characteristics . . . 81
6.3.8 Wakeup time from low-power modes . . . 101
6.3.9 External clock source characteristics . . . 102
6.3.10 Internal clock source characteristics . . . 107
6.3.11 PLL characteristics . . . 108
6.3.12 PLL spread spectrum clock generation (SSCG) characteristics . . . 110
6.3.13 Memory characteristics . . . 112
6.3.14 EMC characteristics . . . 114
6.3.15 Absolute maximum ratings (electrical sensitivity) . . . 116
6.3.16 I/O current injection characteristics . . . 117
6.3.17 I/O port characteristics . . . 118
6.3.18 NRST pin characteristics . . . 123
6.3.19 TIM timer characteristics . . . 124
6.3.20 Communications interfaces . . . 124
6.3.21 12-bit ADC characteristics . . . 141
6.3.22 Temperature sensor characteristics . . . 147
6.3.23 V_{BAT} monitoring characteristics . . . 148
6.3.24 Reference voltage . . . 148
6.3.25 DAC electrical characteristics . . . 148
6.3.26 FMC characteristics . . . 152
6.3.27 Camera interface (DCMI) timing specifications . . . 172
6.3.28 SD/SDIO MMC card host interface (SDIO) characteristics . . . 173
6.3.29 RTC characteristics . . . 175

7 Package information 176

7.1 LQFP64 package information 176

7.2 LQFP100 package information 179

7.3 LQFP144 package information. 182

7.4 UFBGA144 7 x 7 mm package information 186

7.5 UFBGA144 10 x 10 mm package information 189

7.6 WLCSP81 package information 192

7.7 Thermal characteristics 195

8 Part numbering 196

Appendix A Application block diagrams 197

A.1 USB OTG full speed (FS) interface solutions 197

A.2 USB OTG high speed (HS) interface solutions 199

Revision history 200

List of figures

Figure 1. Compatible board design for LQFP100 package . . . 14
Figure 2. Compatible board for LQFP64 package . . . 15
Figure 3. STM32F446xC/E block diagram . . . 16
Figure 4. STM32F446xC/E and Multi-AHB matrix . . . 19
Figure 5. VDDUSB connected to an external independent power supply . . . 23
Figure 6. Power supply supervisor interconnection with internal reset OFF . . . 24
Figure 7. Regulator OFF . . . 26
Figure 8. Startup in regulator OFF: slow V_{DD} slope power-down reset risen after V_{CAP_1}/V_{CAP_2} stabilization . . . 27
Figure 9. Startup in regulator OFF mode: fast V_{DD} slope power-down reset risen before V_{CAP_1}/V_{CAP_2} stabilization . . . 27
Figure 10. STM32F446xC/xE LQFP64 pinout . . . 41
Figure 11. STM32F446xC/xE LQFP100 pinout . . . 42
Figure 12. STM32F446xC LQFP144 pinout . . . 43
Figure 13. STM32F446xC/xE WLCSP81 ballout . . . 44
Figure 14. STM32F446xC/xE UFBGA144 ballout . . . 45
Figure 15. Memory map . . . 67
Figure 16. Pin loading conditions . . . 72
Figure 17. Pin input voltage . . . 72
Figure 18. Power supply scheme . . . 73
Figure 19. Current consumption measurement scheme . . . 74
Figure 20. External capacitor C_{EXT} . . . 79
Figure 21. Typical V_{BAT} current consumption (RTC ON/backup RAM OFF and LSE in low power mode) . . . 91
Figure 22. Typical V_{BAT} current consumption (RTC ON/backup RAM OFF and LSE in high drive mode) . . . 92
Figure 23. High-speed external clock source AC timing diagram . . . 104
Figure 24. Low-speed external clock source AC timing diagram . . . 104
Figure 25. Typical application with an 8 MHz crystal . . . 105
Figure 26. Typical application with a 32.768 kHz crystal . . . 106
Figure 27. $LACC_{HSI}$ versus temperature . . . 107
Figure 28. ACC_{LSI} versus temperature . . . 108
Figure 29. PLL output clock waveforms in center spread mode . . . 112
Figure 30. PLL output clock waveforms in down spread mode . . . 112
Figure 31. FT I/O input characteristics . . . 120
Figure 32. I/O AC characteristics definition . . . 123
Figure 33. Recommended NRST pin protection . . . 124
Figure 34. I^2C bus AC waveforms and measurement circuit . . . 126
Figure 35. $FMPI^2C$ timing diagram and measurement circuit . . . 128
Figure 36. SPI timing diagram - slave mode and CPHA = 0 . . . 130
Figure 37. SPI timing diagram - slave mode and CPHA = 1 . . . 131
Figure 38. SPI timing diagram - master mode . . . 131
Figure 39. I^2S slave timing diagram (Philips protocol)(1) . . . 135
Figure 40. I^2S master timing diagram (Philips protocol)(1) . . . 135
Figure 41. SAI master timing waveforms . . . 137
Figure 42. SAI slave timing waveforms . . . 137
Figure 43. USB OTG full speed timings: definition of data signal rise and fall time . . . 138
Figure 44. ULPI timing diagram . . . 140

Figure 45. ADC accuracy characteristics . . . 144
Figure 46. Typical connection diagram using the ADC . . . 145
Figure 47. Power supply and reference decoupling (V_{REF+} not connected to V_{DDA}) . . . 146
Figure 48. Power supply and reference decoupling (V_{REF+} connected to V_{DDA}) . . . 147
Figure 49. 12-bit buffered/non-buffered DAC . . . 151
Figure 50. Asynchronous non-multiplexed SRAM/PSRAM/NOR read waveforms . . . 153
Figure 51. Asynchronous non-multiplexed SRAM/PSRAM/NOR write waveforms . . . 155
Figure 52. Asynchronous multiplexed PSRAM/NOR read waveforms . . . 156
Figure 53. Asynchronous multiplexed PSRAM/NOR write waveforms . . . 158
Figure 54. Synchronous multiplexed NOR/PSRAM read timings . . . 160
Figure 55. Synchronous multiplexed PSRAM write timings . . . 162
Figure 56. Synchronous non-multiplexed NOR/PSRAM read timings . . . 164
Figure 57. Synchronous non-multiplexed PSRAM write timings . . . 165
Figure 58. NAND controller waveforms for read access . . . 167
Figure 59. NAND controller waveforms for write access . . . 167
Figure 60. NAND controller waveforms for common memory read access . . . 168
Figure 61. NAND controller waveforms for common memory write access . . . 168
Figure 62. SDRAM read access waveforms (CL = 1) . . . 169
Figure 63. SDRAM write access waveforms . . . 171
Figure 64. DCMI timing diagram . . . 173
Figure 65. SDIO high-speed mode . . . 173
Figure 66. SD default mode . . . 174
Figure 67. LQFP64-10x10 mm 64 pin low-profile quad flat package outline . . . 176
Figure 68. LQFP64 Recommended footprint . . . 177
Figure 69. LQFP64 marking example (package top view) . . . 178
Figure 70. LQFP100, 14 x 14 mm 100-pin low-profile quad flat package outline . . . 179
Figure 71. LQFP100 - 100-pin, 14 x 14 mm low-profile quad flat recommended footprint . . . 180
Figure 72. LQFP100 marking example (package top view) . . . 181
Figure 73. LQFP144, 20 x 20 mm, 144-pin low-profile quad flat package outline . . . 182
Figure 74. LQFP144 recommended footprint . . . 184
Figure 75. LQFP144 marking example (package top view) . . . 185
Figure 76. UFBGA144 - 144-pin, 7 x 7 mm, 0.50 mm pitch, ultra fine pitch ball grid array package outline . . . 186
Figure 77. UFBGA144 - 144-ball, 7 x 7 mm, 0.50 mm pitch, ultra fine pitch ball grid array package recommended footprint . . . 187
Figure 78. UQFP144 7 x 7 mm marking example (package top view) . . . 188
Figure 79. UFBGA144 - 144-pin, 10 x 10 mm, 0.80 mm pitch, ultra fine pitch ball grid array package outline . . . 189
Figure 80. UFBGA144 - 144-pin, 10 x 10 mm, 0.80 mm pitch, ultra fine pitch ball grid array package recommended footprint . . . 190
Figure 81. UQFP144 10 x 10 mm marking example (package top view) . . . 191
Figure 82. WLCSP81 - 81-pin, 3.693 x 3.815 mm, 0.4 mm pitch wafer level chip scale package outline . . . 192
Figure 83. WLCSP81- 81-pin, 4.4084 x 3.7594 mm, 0.4 mm pitch wafer level chip scale package recommended footprint . . . 193
Figure 84. WLCSP81 10 x 10 mm marking example (package top view) . . . 194
Figure 85. USB controller configured as peripheral-only and used in Full speed mode . . . 197
Figure 86. USB controller configured as host-only and used in full speed mode . . . 197
Figure 87. USB controller configured in dual mode and used in full speed mode . . . 198
Figure 88. USB controller configured as peripheral, host, or dual-mode and used in high speed mode . . . 199

List of tables

Table 1. Device summary . . . 1
Table 2. STM32F446xC/E features and peripheral counts . . . 13
Table 3. Voltage regulator configuration mode versus device operating mode . . . 25
Table 4. Regulator ON/OFF and internal reset ON/OFF availability . . . 27
Table 5. Voltage regulator modes in stop mode . . . 29
Table 6. Timer feature comparison . . . 31
Table 7. Comparison of I2C analog and digital filters . . . 33
Table 8. USART feature comparison . . . 34
Table 9. Legend/abbreviations used in the pinout table . . . 46
Table 10. STM32F446xx pin and ball descriptions . . . 46
Table 11. Alternate function . . . 59
Table 12. STM32F446xC/E register boundary addresses . . . 68
Table 13. Voltage characteristics . . . 74
Table 14. Current characteristics . . . 75
Table 15. Thermal characteristics . . . 75
Table 16. General operating conditions . . . 76
Table 17. Limitations depending on the operating power supply range . . . 78
Table 18. VCAP_1/VCAP_2 operating conditions . . . 79
Table 19. Operating conditions at power-up/power-down (regulator ON) . . . 79
Table 20. Operating conditions at power-up / power-down (regulator OFF) . . . 79
Table 21. reset and power control block characteristics . . . 80
Table 22. Over-drive switching characteristics . . . 81
Table 23. Typical and maximum current consumption in Run mode, code with data processing running from Flash memory (ART accelerator enabled except prefetch) or RAM . . . 83
Table 24. Typical and maximum current consumption in Run mode, code with data processing running from Flash memory (ART accelerator enabled with prefetch) or RAM . . . 84
Table 25. Typical and maximum current consumption in Run mode, code with data processing running from Flash memory (ART accelerator disabled) . . . 85
Table 26. Typical and maximum current consumption in Sleep mode . . . 86
Table 27. Typical and maximum current consumptions in Stop mode . . . 89
Table 28. Typical and maximum current consumptions in Standby mode . . . 90
Table 29. Typical and maximum current consumptions in V_{BAT} mode . . . 91
Table 30. Typical current consumption in Run mode, code with data processing running from Flash memory or RAM, regulator ON (ART accelerator enabled except prefetch), VDD=1.7 V . . . 93
Table 31. Typical current consumption in Run mode, code with data processing running from Flash memory, regulator OFF (ART accelerator enabled except prefetch) . . . 94
Table 32. Typical current consumption in Sleep mode, regulator ON, VDD=1.7 V . . . 95
Table 33. Typical current consumption in Sleep mode, regulator OFF . . . 96
Table 34. Switching output I/O current consumption . . . 97
Table 35. Peripheral current consumption . . . 99
Table 36. Low-power mode wakeup timings . . . 102
Table 37. High-speed external user clock characteristics . . . 103
Table 38. Low-speed external user clock characteristics . . . 103
Table 39. HSE 4-26 MHz oscillator characteristics . . . 105
Table 40. LSE oscillator characteristics (f_{LSE} = 32.768 kHz) . . . 106
Table 41. HSI oscillator characteristics . . . 107
Table 42. LSI oscillator characteristics . . . 108

Table 43. Main PLL characteristics . . . 108
Table 44. PLLI2S (audio PLL) characteristics . . . 109
Table 45. PLLISAI characteristics . . . 110
Table 46. SSCG parameters constraint . . . 111
Table 47. Flash memory characteristics . . . 112
Table 48. Flash memory programming . . . 113
Table 49. Flash memory programming with V_{PP} . . . 113
Table 50. Flash memory endurance and data retention . . . 114
Table 51. EMS characteristics . . . 115
Table 52. EMI characteristics . . . 116
Table 53. ESD absolute maximum ratings . . . 116
Table 54. Electrical sensitivities . . . 117
Table 55. I/O current injection susceptibility . . . 117
Table 56. I/O static characteristics . . . 118
Table 57. Output voltage characteristics . . . 121
Table 58. I/O AC characteristics . . . 121
Table 59. NRST pin characteristics . . . 123
Table 60. TIMx characteristics . . . 124
Table 61. I^2C characteristics . . . 125
Table 62. $FMPI^2C$ characteristics . . . 127
Table 63. SPI dynamic characteristics . . . 129
Table 64. QSPI dynamic characteristics in SDR Mode . . . 132
Table 65. QSPI dynamic characteristics in DDR Mode . . . 132
Table 66. I^2S dynamic characteristics . . . 133
Table 67. SAI characteristics . . . 136
Table 68. USB OTG full speed startup time . . . 137
Table 69. USB OTG full speed DC electrical characteristics . . . 138
Table 70. USB OTG full speed electrical characteristics . . . 139
Table 71. USB HS DC electrical characteristics . . . 139
Table 72. USB HS clock timing parameters . . . 139
Table 73. Dynamic characteristics: USB ULPI . . . 140
Table 74. ADC characteristics . . . 141
Table 75. ADC static accuracy at f_{ADC} = 18 MHz . . . 142
Table 76. ADC static accuracy at f_{ADC} = 30 MHz . . . 143
Table 77. ADC static accuracy at f_{ADC} = 36 MHz . . . 143
Table 78. ADC dynamic accuracy at f_{ADC} = 18 MHz - limited test conditions . . . 143
Table 79. ADC dynamic accuracy at f_{ADC} = 36 MHz - limited test conditions . . . 143
Table 80. Temperature sensor characteristics . . . 147
Table 81. Temperature sensor calibration values . . . 147
Table 82. V_{BAT} monitoring characteristics . . . 148
Table 83. internal reference voltage . . . 148
Table 84. Internal reference voltage calibration values . . . 148
Table 85. DAC characteristics . . . 148
Table 86. Asynchronous non-multiplexed SRAM/PSRAM/NOR - read timings . . . 154
Table 87. Asynchronous non-multiplexed SRAM/PSRAM/NOR read - NWAIT timings . . . 154
Table 88. Asynchronous non-multiplexed SRAM/PSRAM/NOR write timings . . . 155
Table 89. Asynchronous non-multiplexed SRAM/PSRAM/NOR write - NWAIT timings . . . 156
Table 90. Asynchronous multiplexed PSRAM/NOR read timings . . . 157
Table 91. Asynchronous multiplexed PSRAM/NOR read-NWAIT timings . . . 157

Table 92. Asynchronous multiplexed PSRAM/NOR write timings . . . 159
Table 93. Asynchronous multiplexed PSRAM/NOR write-NWAIT timings . . . 159
Table 94. Synchronous multiplexed NOR/PSRAM read timings . . . 161
Table 95. Synchronous multiplexed PSRAM write timings . . . 163
Table 96. Synchronous non-multiplexed NOR/PSRAM read timings . . . 164
Table 97. Synchronous non-multiplexed PSRAM write timings . . . 166
Table 98. Switching characteristics for NAND Flash read cycles . . . 168
Table 99. Switching characteristics for NAND Flash write cycles . . . 169
Table 100. SDRAM read timings . . . 170
Table 101. LPSDR SDRAM read timings . . . 170
Table 102. SDRAM write timings . . . 171
Table 103. LPSDR SDRAM write timings . . . 172
Table 104. DCMI characteristics . . . 172
Table 105. Dynamic characteristics: SD / MMC characteristics . . . 174
Table 106. Dynamic characteristics: eMMC characteristics VDD = 1.7 V to 1.9 V . . . 175
Table 107. RTC characteristics . . . 175
Table 108. LQFP64 – 10 x 10 mm low-profile quad flat package mechanical data . . . 176
Table 109. LQPF100, 14 x 14 mm 100-pin low-profile quad flat package mechanical data . . . 179
Table 110. LQFP144, 20 x 20 mm, 144-pin low-profile quad flat package mechanical data . . . 183
Table 111. UFBGA144 - 144-pin, 7 x 7 mm, 0.50 mm pitch, ultra fine pitch ball grid array package mechanical data . . . 186
Table 112. UFBGA144 recommended PCB design rules (0.50 mm pitch BGA) . . . 187
Table 113. UFBGA144 - 144-pin, 10 x 10 mm, 0.80 mm pitch, ultra fine pitch ball grid array package mechanical data . . . 189
Table 114. UFBGA144 recommended PCB design rules (0.80 mm pitch BGA) . . . 190
Table 115. WLCSP81- 81-pin, 3.693 x 3.815 mm, 0.4 mm pitch wafer level chip scale package mechanical data . . . 192
Table 116. WLCSP81 recommended PCB design rules (0.4 mm pitch) . . . 193
Table 117. Package thermal characteristics . . . 195
Table 118. Ordering information scheme . . . 196
Table 119. Document revision history . . . 200

1 Introduction

This document provides the description of the STM32F446xC/E products.

The STM32F446xC/E document should be read in conjunction with the STM32F4xx reference manual.

For information on the Cortex®-M4 core, please refer to the Cortex®-M4 programming manual (PM0214), available from the *www.st.com*.

2 Description

The STM32F446xC/E devices are based on the high-performance ARM® Cortex®-M4 32-bit RISC core operating at a frequency of up to 180 MHz. The Cortex-M4 core features a Floating point unit (FPU) single precision which supports all ARM® single-precision data-processing instructions and data types. It also implements a full set of DSP instructions and a memory protection unit (MPU) which enhances application security.

The STM32F446xC/E devices incorporate high-speed embedded memories (Flash memory up to 512 Kbyte, up to 128 Kbyte of SRAM), up to 4 Kbytes of backup SRAM, and an extensive range of enhanced I/Os and peripherals connected to two APB buses, two AHB buses and a 32-bit multi-AHB bus matrix.

All devices offer three 12-bit ADCs, two DACs, a low-power RTC, twelve general-purpose 16-bit timers including two PWM timers for motor control, two general-purpose 32-bit timers.

They also feature standard and advanced communication interfaces.

- Up to four I^2Cs;
- Four SPIs, three I^2Ss full simplex. To achieve audio class accuracy, the I^2S peripherals can be clocked via a dedicated internal audio PLL or via an external clock to allow synchronization;
- Four USARTs plus two UARTs;
- An USB OTG full-speed and an USB OTG high-speed with full-speed capability (with the ULPI), both with dedicated power rails allowing to use them throughout the entire power range;
- Two CANs;
- Two SAIs serial audio interfaces. To achieve audio class accuracy, the SAIs can be clocked via a dedicated internal audio PLL;
- An SDIO/MMC interface;
- Camera interface;
- HDMI-CEC;
- SPDIF Receiver (SPDIFRx);
- QuadSPI.

Advanced peripherals include an SDIO, a flexible memory control (FMC) interface, a camera interface for CMOS sensors. Refer to *Table 2: STM32F446xC/E features and peripheral counts* for the list of peripherals available on each part number.

The STM32F446xC/E devices operates in the –40 to +105 °C temperature range from a 1.7 to 3.6 V power supply.

The supply voltage can drop to 1.7 V with the use of an external power supply supervisor (refer to *Section 3.16.2: Internal reset OFF*). A comprehensive set of power-saving mode allows the design of low-power applications.

The STM32F446xC/E devices offer devices in 6 packages ranging from 64 pins to 144 pins. The set of included peripherals changes with the device chosen.

These features make the STM32F446xC/E microcontrollers suitable for a wide range of applications:

- Motor drive and application control
- Medical equipment
- Industrial applications: PLC, inverters, circuit breakers
- Printers, and scanners
- Alarm systems, video intercom, and HVAC
- Home audio appliances

Table 2. STM32F446xC/E features and peripheral counts

Peripherals		STM32F446 6MC	STM32F446 6ME	STM32F446 6RC	STM32F446 6RE	STM32F446 6VC	STM32F446 6VE	STM32F446 6ZC	STM32F446 6ZE
Flash memory in Kbytes		256	512	256	512	256	512	256	512
SRAM in Kbytes	System	128 (112+16)							
	Backup	4							
FMC memory controller		No				Yes(1)			
Timers	General-purpose	10							
	Advanced-control	2							
	Basic	2							
Communication interfaces	SPI / I^2S	4/3 (simplex)(2)							
	I^2C	4/1 FMP +							
	USART/UART	4/2							
	USB OTG FS	Yes (6-Endpoints)							
	USB OTG HS	Yes (8-Endpoints)							
	CAN	2							
	SAI	2							
	SDIO	Yes							
	SPDIF-Rx	1							
	HDMI-CEC	1							
	Quad SPI(3)	1							
Camera interface		Yes							
GPIOs		63		50		81		114	
12-bit ADC Number of channels		3							
		14		16		16		24	
12-bit DAC Number of channels		Yes 2							
Maximum CPU frequency		180 MHz							
Operating voltage		1.8 to 3.6 V(4)							
Operating temperatures		Ambient temperatures: –40 to +85 °C /–40 to +105 °C							
		Junction temperature: –40 to + 125 °C							
Packages		WLCSP81		LQFP64		LQFP100		LQFP144 UFBGA144	

1. For the LQFP100 package, only FMC Bank1 or Bank2 are available. Bank1 can only support a multiplexed NOR/PSRAM memory using the NE1 Chip Select. Bank2 can only support a 16- or 8-bit NAND Flash memory using the NCE2 Chip Select. The interrupt line cannot be used since Port G is not available in this package.
2. The SPI1, SPI2 and SPI3 interfaces give the flexibility to work in an exclusive way in either the SPI mode or the I2S audio mode.
3. For the LQFP64 package, the Quad SPI is available with limited features.
4. V_{DD}/V_{DDA} minimum value of 1.7 V is obtained when the device operates in reduced temperature range, and with the use of an external power supply supervisor (refer to *Section 3.16.2: Internal reset OFF*).

2.1 Compatibility with STM32F4 family

The STM32F446xC/xV is software and feature compatible with the STM32F4 family.

The STM32F446xC/xV can be used as drop-in replacement of the other STM32F4 products but some slight changes have to be done on the PCB board.

Figure 1. Compatible board design for LQFP100 package

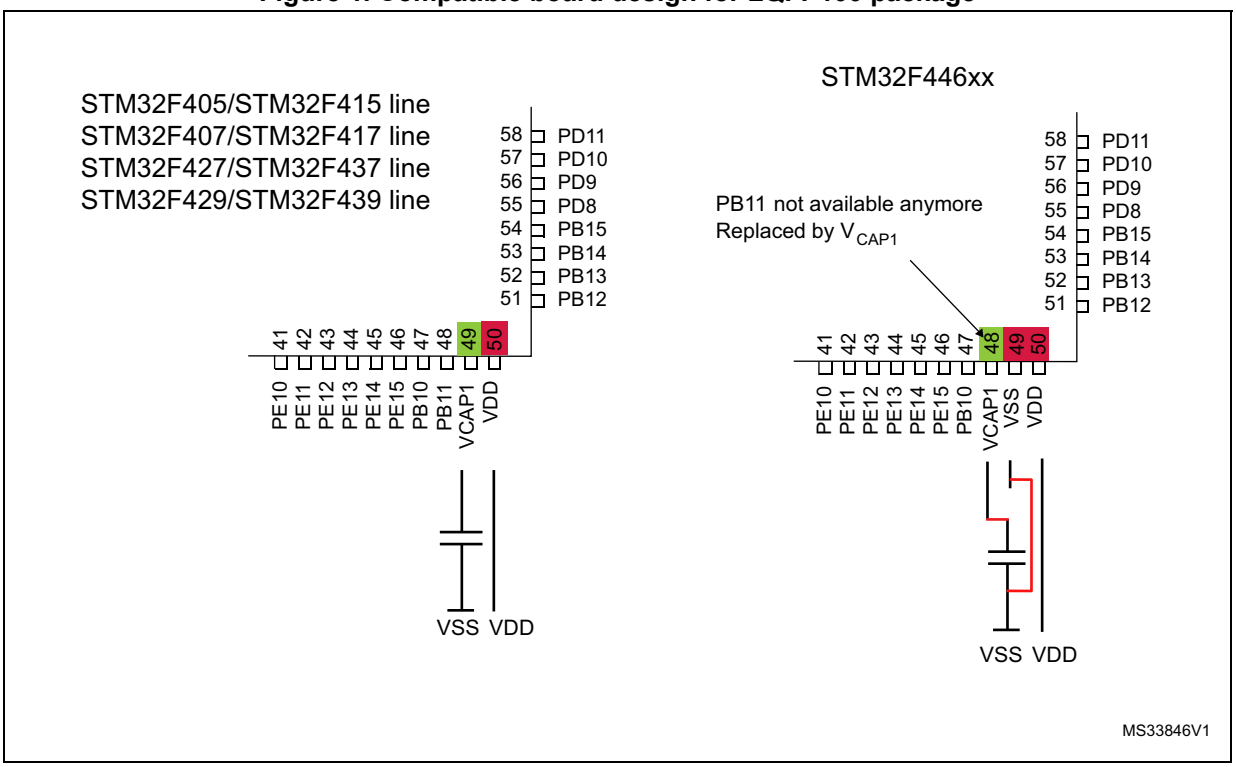

Figure 2. Compatible board for LQFP64 package

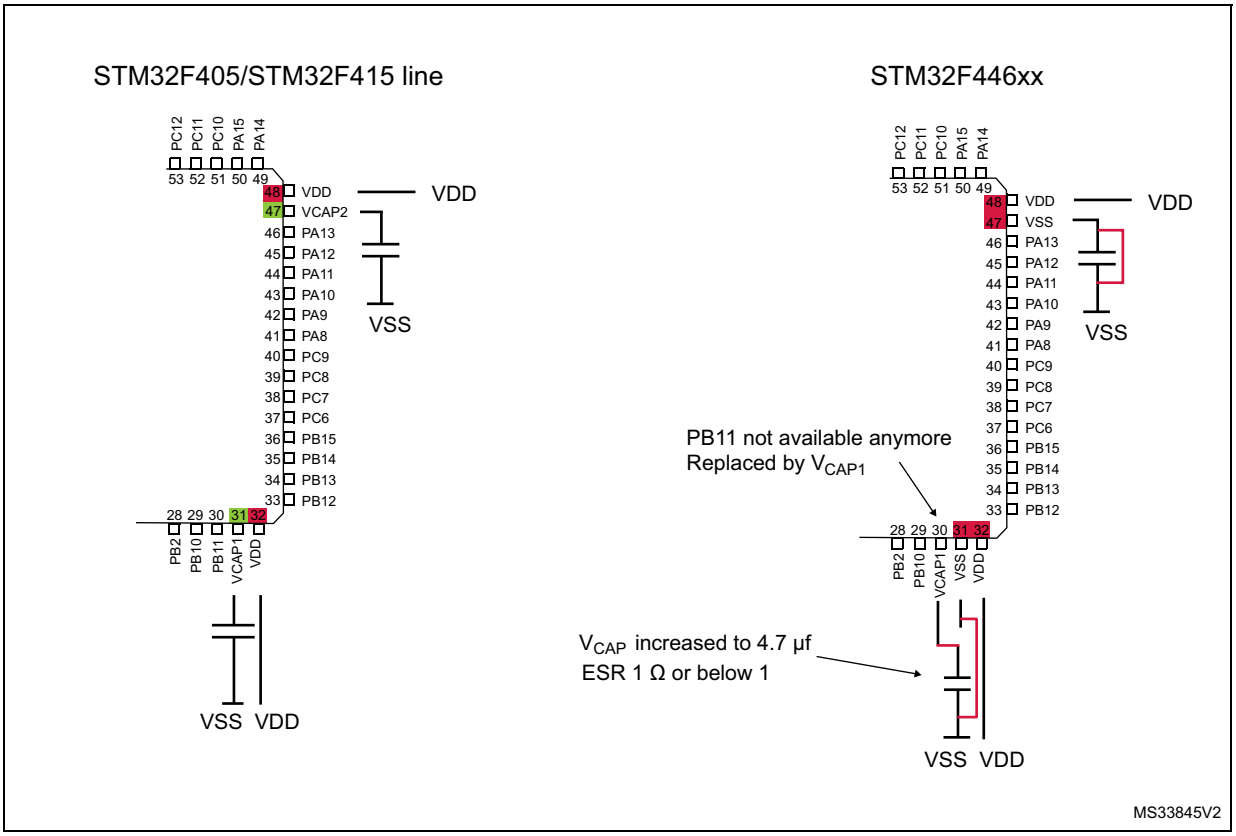

Figure 3 shows the STM32F446xx block diagram.

Figure 3. STM32F446xC/E block diagram

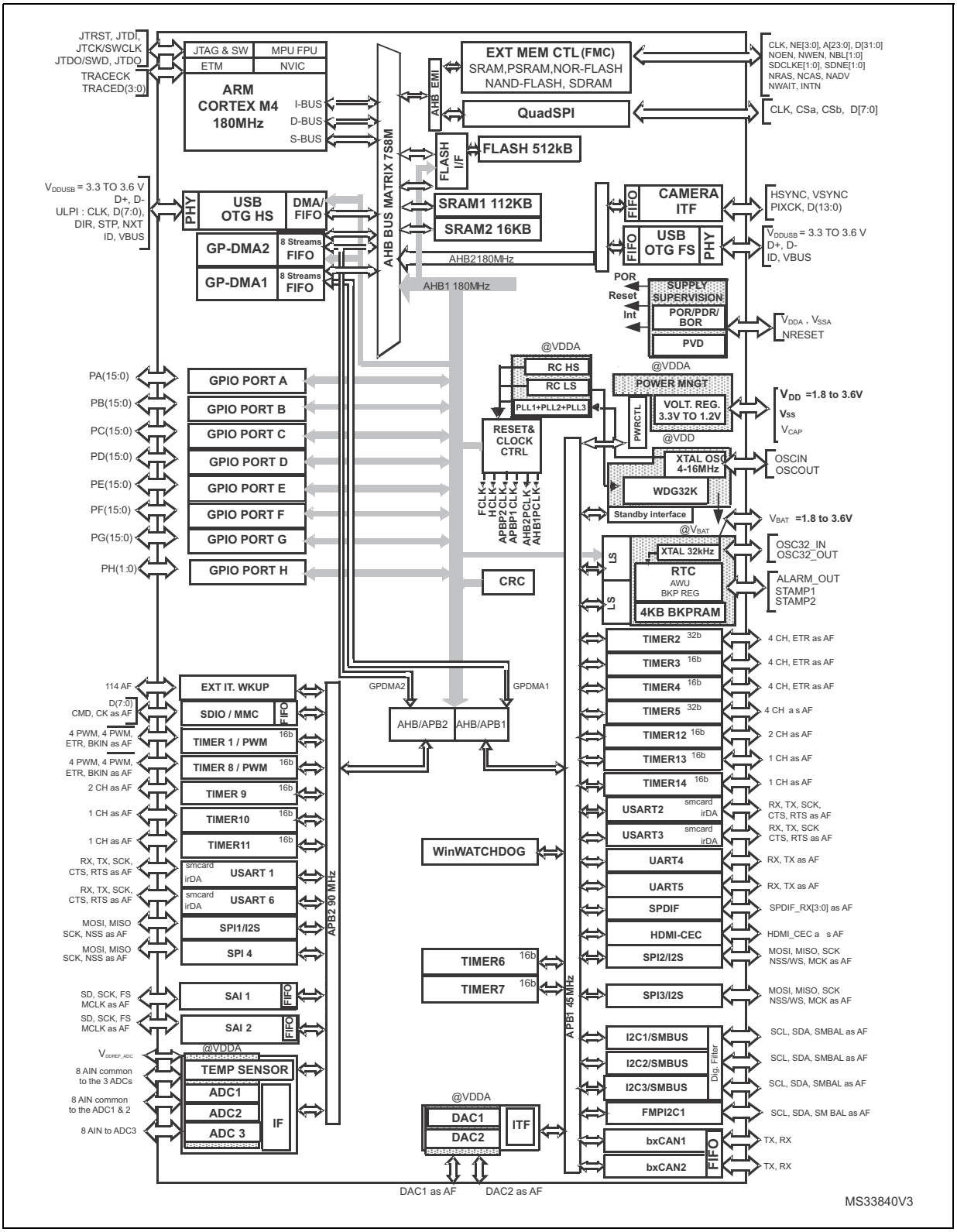

3 Functional overview

3.1 ARM® Cortex®-M4 with FPU and embedded Flash and SRAM

The ARM® Cortex®-M4 with FPU processor is the latest generation of ARM processors for embedded systems. It was developed to provide a low-cost platform that meets the needs of MCU implementation, with a reduced pin count and low-power consumption, while delivering outstanding computational performance and an advanced response to interrupts.

The ARM® Cortex®-M4 with FPU core is a 32-bit RISC processor that features exceptional code-efficiency, delivering the high-performance expected from an ARM core in the memory size usually associated with 8- and 16-bit devices.

The processor supports a set of DSP instructions which allow efficient signal processing and complex algorithm execution.

Its single precision FPU (floating point unit) speeds up software development by using metalanguage development tools, while avoiding saturation.

The STM32F446xC/E family is compatible with all ARM tools and software.

Figure 3 shows the general block diagram of the STM32F446xC/E family.

Note: Cortex-M4 with FPU core is binary compatible with the Cortex-M3 core.

3.2 Adaptive real-time memory accelerator (ART Accelerator™)

The ART Accelerator™ is a memory accelerator which is optimized for STM32 industry-standard ARM® Cortex®-M4 with FPU processors. It balances the inherent performance advantage of the ARM® Cortex®-M4 with FPU over Flash memory technologies, which normally requires the processor to wait for the Flash memory at higher frequencies.

To release the processor full 225 DMIPS performance at this frequency, the accelerator implements an instruction prefetch queue and branch cache, which increases program execution speed from the 128-bit Flash memory. Based on CoreMark benchmark, the performance achieved thanks to the ART Accelerator is equivalent to 0 wait state program execution from Flash memory at a CPU frequency up to 180 MHz.

3.3 Memory protection unit

The memory protection unit (MPU) is used to manage the CPU accesses to memory to prevent one task to accidentally corrupt the memory or resources used by any other active task. This memory area is organized into up to 8 protected areas that can in turn be divided up into 8 subareas. The protection area sizes are between 32 bytes and the whole 4 gigabytes of addressable memory.

The MPU is especially helpful for applications where some critical or certified code has to be protected against the misbehavior of other tasks. It is usually managed by an RTOS (real-time operating system). If a program accesses a memory location that is prohibited by the MPU, the RTOS can detect it and take action. In an RTOS environment, the kernel can dynamically update the MPU area setting, based on the process to be executed.

The MPU is optional and can be bypassed for applications that do not need it.

3.4 Embedded Flash memory

The devices embed a Flash memory of 512KB available for storing programs and data.

3.5 CRC (cyclic redundancy check) calculation unit

The CRC (cyclic redundancy check) calculation unit is used to get a CRC code from a 32-bit data word and a fixed generator polynomial.

Among other applications, CRC-based techniques are used to verify data transmission or storage integrity. In the scope of the EN/IEC 60335-1 standard, they offer a means of verifying the Flash memory integrity. The CRC calculation unit helps compute a software signature during runtime, to be compared with a reference signature generated at link-time and stored at a given memory location.

3.6 Embedded SRAM

All devices embed:

- Up to 128Kbytes of system SRAM.

  RAM memory is accessed (read/write) at CPU clock speed with 0 wait states.
- 4 Kbytes of backup SRAM

  This area is accessible only from the CPU. Its content is protected against possible unwanted write accesses, and is retained in Standby or V_{BAT} mode.

3.7 Multi-AHB bus matrix

The 32-bit multi-AHB bus matrix interconnects all the masters (CPU, DMAs, USB HS) and the slaves Flash memory, RAM, QuadSPI, FMC, AHB and APB peripherals and ensures a seamless and efficient operation even when several high-speed peripherals work simultaneously.

Figure 4. STM32F446xC/E and Multi-AHB matrix

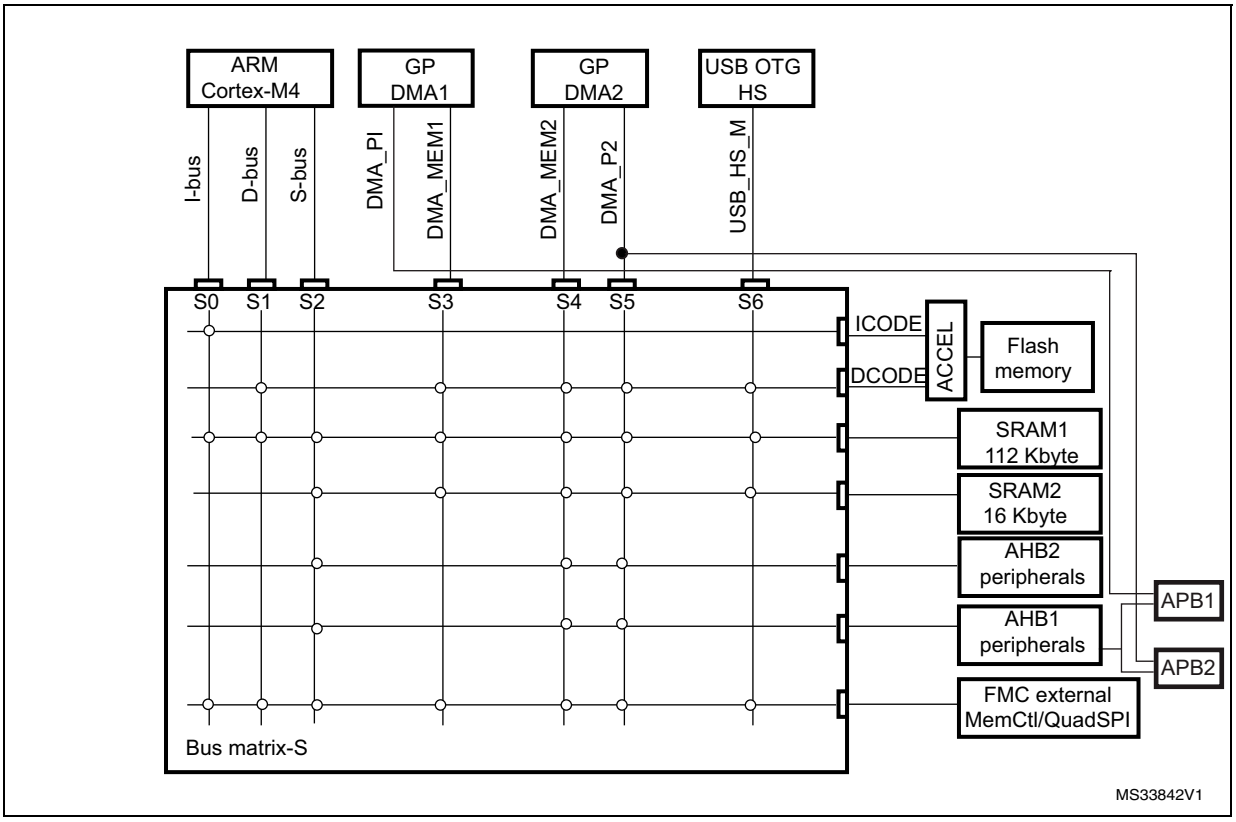

3.8 DMA controller (DMA)

The devices feature two general-purpose dual-port DMAs (DMA1 and DMA2) with 8 streams each. They are able to manage memory-to-memory, peripheral-to-memory and memory-to-peripheral transfers. They feature dedicated FIFOs for APB/AHB peripherals, support burst transfer and are designed to provide the maximum peripheral bandwidth (AHB/APB).

The two DMA controllers support circular buffer management, so that no specific code is needed when the controller reaches the end of the buffer. The two DMA controllers also have a double buffering feature, which automates the use and switching of two memory buffers without requiring any special code.

Each stream is connected to dedicated hardware DMA requests, with support for software trigger on each stream. Configuration is made by software and transfer sizes between source and destination are independent.

The DMA can be used with the main peripherals:

- SPI and I^2S
- I^2C
- USART
- General-purpose, basic and advanced-control timers TIMx
- DAC
- SDIO
- Camera interface (DCMI)
- ADC
- SAI1/SAI2
- SPDIF Receiver (SPDIFRx)
- QuadSPI

3.9 Flexible memory controller (FMC)

All devices embed an FMC. It has seven Chip Select outputs supporting the following modes: SDRAM/LPSDR SDRAM, SRAM, PSRAM, NOR Flash and NAND Flash. With the possibility to remap FMC bank 1 (NOR/PSRAM 1 and 2) and FMC SDRAM bank 1/2 in the Cortex-M4 code area.

Functionality overview:

- 8-,16-bit data bus width
- Read FIFO for SDRAM controller
- Write FIFO
- Maximum FMC_CLK/FMC_SDCLK frequency for synchronous accesses is 90 MHz.

LCD parallel interface

The FMC can be configured to interface seamlessly with most graphic LCD controllers. It supports the Intel 8080 and Motorola 6800 modes, and is flexible enough to adapt to specific LCD interfaces. This LCD parallel interface capability makes it easy to build cost-effective graphic applications using LCD modules with embedded controllers or high performance solutions using external controllers with dedicated acceleration.

3.10 Quad SPI memory interface (QUADSPI)

All devices embed a Quad SPI memory interface, which is a specialized communication interface targeting Single, Dual or Quad SPI flash memories. It can work in direct mode through registers, external flash status register polling mode and memory mapped mode. Up to 256 Mbytes external flash are memory mapped, supporting 8, 16 and 32-bit access. Code execution is supported. The opcode and the frame format are fully programmable. Communication can be either in Single Data Rate or Dual Data Rate.

3.11 Nested vectored interrupt controller (NVIC)

The devices embed a nested vectored interrupt controller able to manage 16 priority levels, and handle up to 91 maskable interrupt channels plus the 16 interrupt lines of the Cortex®-M4 with FPU core.

- Closely coupled NVIC gives low-latency interrupt processing
- Interrupt entry vector table address passed directly to the core
- Allows early processing of interrupts
- Processing of late arriving, higher-priority interrupts
- Support tail chaining
- Processor state automatically saved
- Interrupt entry restored on interrupt exit with no instruction overhead

This hardware block provides flexible interrupt management features with minimum interrupt latency.

3.12 External interrupt/event controller (EXTI)

The external interrupt/event controller consists of 23 edge-detector lines used to generate interrupt/event requests. Each line can be independently configured to select the trigger event (rising edge, falling edge, both) and can be masked independently. A pending register maintains the status of the interrupt requests. The EXTI can detect an external line with a pulse width shorter than the Internal APB2 clock period. Up to 114 GPIOs can be connected to the 16 external interrupt lines.

3.13 Clocks and startup

On reset the 16 MHz internal RC oscillator is selected as the default CPU clock. The 16 MHz internal RC oscillator is factory-trimmed to offer 1% accuracy at 25 °C. The application can then select as system clock either the RC oscillator or an external 4-26 MHz clock source. This clock can be monitored for failure. If a failure is detected, the system automatically switches back to the internal RC oscillator and a software interrupt is generated (if enabled). This clock source is input to a PLL thus allowing to increase the frequency up to 180 MHz. Similarly, full interrupt management of the PLL clock entry is available when necessary (for example if an indirectly used external oscillator fails).

Several prescalers allow the configuration of the two AHB buses, the high-speed APB (APB2) and the low-speed APB (APB1) domains. The maximum frequency of the two AHB buses is 180 MHz while the maximum frequency of the high-speed APB domains is 90 MHz. The maximum allowed frequency of the low-speed APB domain is 45 MHz.

The devices embed a dedicated PLL (PLLI2S) and PLLSAI which allows to achieve audio class performance. In this case, the I^2S master clock can generate all standard sampling frequencies from 8 kHz to 192 kHz.

3.14 Boot modes

At startup, boot pins are used to select one out of three boot options:

- Boot from user Flash
- Boot from system memory
- Boot from embedded SRAM

The boot loader is located in system memory. It is used to reprogram the Flash memory through a serial (UART, I^2C, CAN, SPI and USB) communication interface. Refer to application note AN2606 for details.

3.15 Power supply schemes

- V_{DD} = 1.7 to 3.6 V: external power supply for I/Os and the internal regulator (when enabled), provided externally through V_{DD} pins.
- V_{SSA}, V_{DDA} = 1.7 to 3.6 V: external analog power supplies for ADC, DAC, Reset blocks, RCs and PLL. V_{DDA} and V_{SSA} must be connected to V_{DD} and V_{SS}, respectively.

Note: V_{DD}/V_{DDA} minimum value of 1.7 V is obtained with the use of an external power supply supervisor (refer to Section 3.16.2: Internal reset OFF). Refer to Table 3: Voltage regulator configuration mode versus device operating mode to identify the packages supporting this option.

- V_{BAT} = 1.65 to 3.6 V: power supply for RTC, external clock 32 kHz oscillator and backup registers (through power switch) when V_{DD} is not present.
- V_{DDUSB} can be connected either to VDD or an external independent power supply (3.0 to 3.6V) for USB transceivers.
  For example, when device is powered at 1.8V, an independent power supply 3.3V can be connected to V_{DDUSB}. When the V_{DDUSB} is connected to a separated power supply, it is independent from V_{DD} or V_{DDA} but it must be the last supply to be provided and the first to disappear. The following conditions VDDUSB must be respected:
  - During power-on phase (V_{DD} < VDD_MIN), VDDUSB should be always lower than VDD
  - During power-down phase (VDD < VDD_MIN), VDDUSB should be always lower than VDD
  - VDDUSB rising and falling time rate specifications must be respected.
  - In operating mode phase, V_{DDUSB} could be lower or higher than VDD:
    - If USB (USB OTG_HS/OTG_FS) is used, the associated GPIOs powered by V_{DDUSB} are operating between V_{DDUSB_MIN} and V_{DDUSB_MAX}.The V_{DDUSB} supply both USB transceiver (USB OTG_HS and USB OTG_FS).
    - If only one USB transceiver is used in the application, the GPIOs associated to the other USB transceiver are still supplied by V_{DDUSB}.
    - If USB (USB OTG_HS/OTG_FS) is not used, the associated GPIOs powered by V_{DDUSB} are operating between V_{DD_MIN} and V_{DD_MAX}.

Figure 5. V_{DDUSB} connected to an external independent power supply

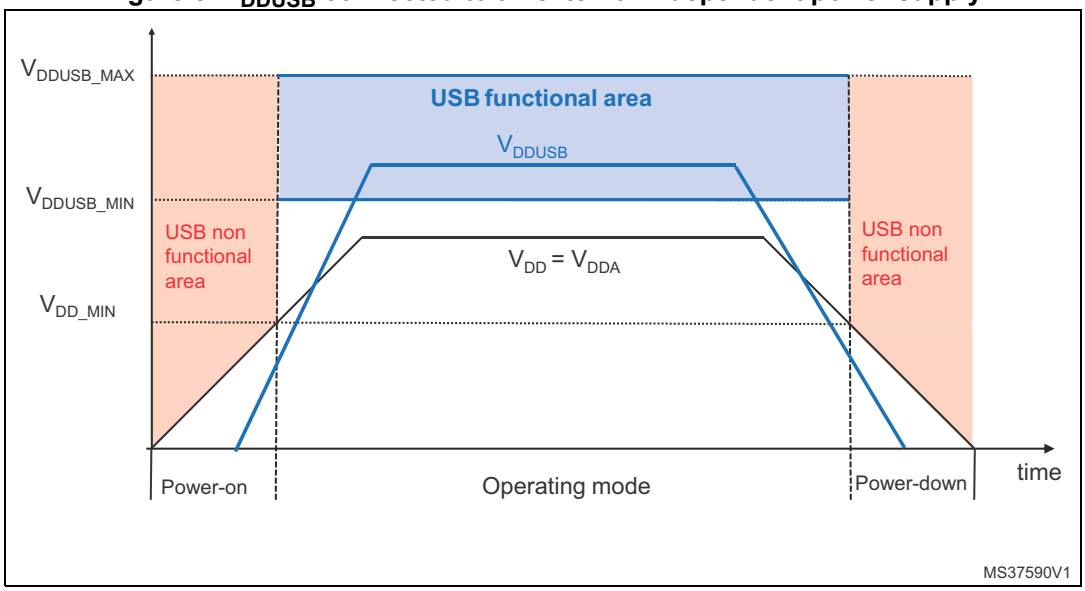

3.16 Power supply supervisor

3.16.1 Internal reset ON

On packages embedding the PDR_ON pin, the power supply supervisor is enabled by holding PDR_ON high. On the other package, the power supply supervisor is always enabled.

The device has an integrated power-on reset (POR)/ power-down reset (PDR) circuitry coupled with a Brownout reset (BOR) circuitry. At power-on, POR/PDR is always active and ensures proper operation starting from 1.8 V. After the 1.8 V POR threshold level is reached, the option byte loading process starts, either to confirm or modify default BOR thresholds, or to disable BOR permanently. Three BOR thresholds are available through option bytes. The device remains in reset mode when V_{DD} is below a specified threshold, $V_{POR/PDR}$ or V_{BOR}, without the need for an external reset circuit.

The device also features an embedded programmable voltage detector (PVD) that monitors the V_{DD}/V_{DDA} power supply and compares it to the V_{PVD} threshold. An interrupt can be generated when V_{DD}/V_{DDA} drops below the V_{PVD} threshold and/or when V_{DD}/V_{DDA} is higher than the V_{PVD} threshold. The interrupt service routine can then generate a warning message and/or put the MCU into a safe state. The PVD is enabled by software.

3.16.2 Internal reset OFF

This feature is available only on packages featuring the PDR_ON pin. The internal power-on reset (POR) / power-down reset (PDR) circuitry is disabled through the PDR_ON pin.

An external power supply supervisor should monitor V_{DD} and should maintain the device in reset mode as long as V_{DD} is below a specified threshold. PDR_ON should be connected to VSS, to allows device to operate down to 1.7v. Refer to *Figure 6: Power supply supervisor interconnection with internal reset OFF*.

Figure 6. Power supply supervisor interconnection with internal reset OFF

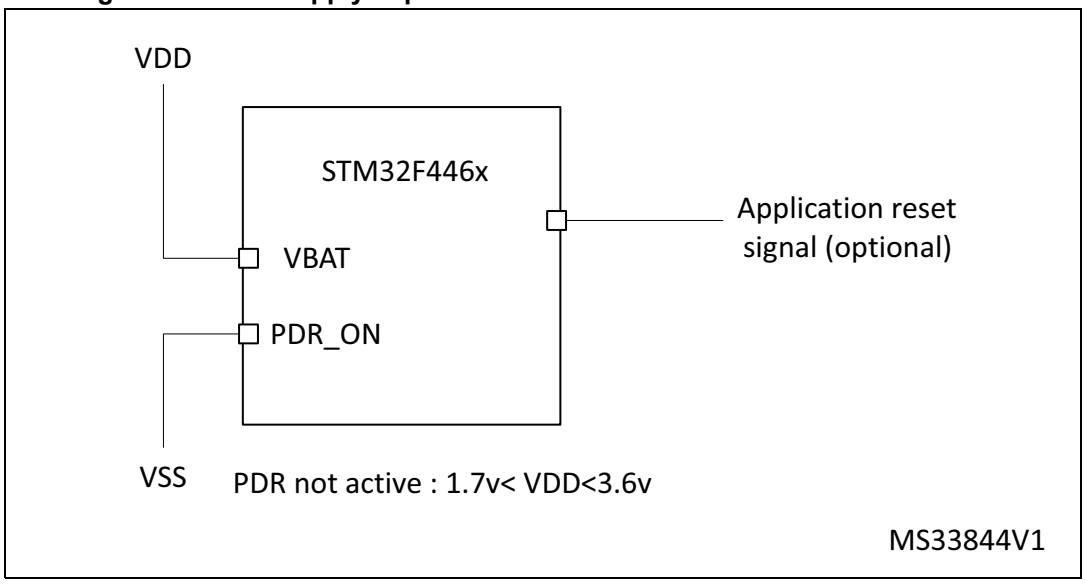

The V_{DD} specified threshold, below which the device must be maintained under reset, is 1.7 V.

A comprehensive set of power-saving mode allows to design low-power applications.

When the internal reset is OFF, the following integrated features are no more supported:

- The integrated power-on reset (POR) / power-down reset (PDR) circuitry is disabled
- The brownout reset (BOR) circuitry must be disabled
- The embedded programmable voltage detector (PVD) is disabled
- V_{BAT} functionality is no more available and V_{BAT} pin should be connected to V_{DD}.

All packages, except for the LQFP100/LQFP64, allow to disable the internal reset through the PDR_ON signal.

3.17 Voltage regulator

The regulator has four operating modes:

- Regulator ON
  - Main regulator mode (MR)
  - Low power regulator (LPR)
  - Power-down
- Regulator OFF

3.17.1 Regulator ON

On packages embedding the BYPASS_REG pin, the regulator is enabled by holding BYPASS_REG low. On all other packages, the regulator is always enabled.

There are three power modes configured by software when the regulator is ON:

- MR mode used in Run/sleep modes or in Stop modes
  - In Run/Sleep mode

    The MR mode is used either in the normal mode (default mode) or the over-drive mode (enabled by software). Different voltages scaling are provided to reach the best compromise between maximum frequency and dynamic power consumption. The over-drive mode allows operating at a higher frequency than the normal mode for a given voltage scaling.
  - In Stop modes

    The MR can be configured in two ways during stop mode:

    MR operates in normal mode (default mode of MR in stop mode)

    MR operates in under-drive mode (reduced leakage mode).
- LPR is used in the Stop modes:

  The LP regulator mode is configured by software when entering Stop mode.

  Like the MR mode, the LPR can be configured in two ways during stop mode:
  - LPR operates in normal mode (default mode when LPR is ON)
  - LPR operates in under-drive mode (reduced leakage mode).
- Power-down is used in Standby mode.

  The Power-down mode is activated only when entering in Standby mode. The regulator output is in high impedance and the kernel circuitry is powered down, inducing zero consumption. The contents of the registers and SRAM are lost.

Refer to *Table 3* for a summary of voltage regulator modes versus device operating modes.

Two external ceramic capacitors should be connected on V_{CAP_1} and V_{CAP_2} pin.

All packages have the regulator ON feature.

Table 3. Voltage regulator configuration mode versus device operating mode(1)

Voltage regulator configuration	Run mode	Sleep mode	Stop mode	Standby mode
Normal mode	MR	MR	MR or LPR	-
Over-drive mode(2)	MR	MR	-	-
Under-drive mode	-	-	MR or LPR	-
Power-down mode	-	-	-	Yes

1. '-' means that the corresponding configuration is not available.
2. The over-drive mode is not available when V_{DD} = 1.7 to 2.1 V.

3.17.2 Regulator OFF

This feature is available only on packages featuring the BYPASS_REG pin. The regulator is disabled by holding BYPASS_REG high. The regulator OFF mode allows to supply externally a V_{12} voltage source through V_{CAP_1} and V_{CAP_2} pins.

Since the internal voltage scaling is not managed internally, the external voltage value must be aligned with the targeted maximum frequency. The two 2.2 µF ceramic capacitors should be replaced by two 100 nF decoupling capacitors.

When the regulator is OFF, there is no more internal monitoring on V_{12}. An external power supply supervisor should be used to monitor the V_{12} of the logic power domain. PA0 pin should be used for this purpose, and act as power-on reset on V_{12} power domain.

In regulator OFF mode, the following features are no more supported:

- PA0 cannot be used as a GPIO pin since it allows to reset a part of the V_{12} logic power domain which is not reset by the NRST pin.
- As long as PA0 is kept low, the debug mode cannot be used under power-on reset. As a consequence, PA0 and NRST pins must be managed separately if the debug connection under reset or pre-reset is required.
- The over-drive and under-drive modes are not available.

Figure 7. Regulator OFF

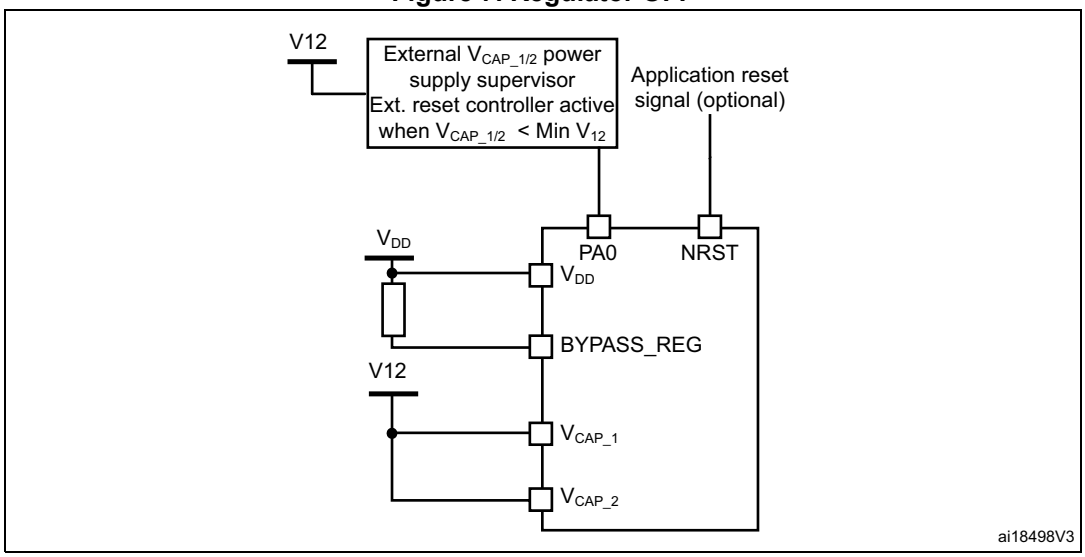

The following conditions must be respected:

- V_{DD} should always be higher than V_{CAP_1} and V_{CAP_2} to avoid current injection between power domains.
- If the time for V_{CAP_1} and V_{CAP_2} to reach V_{12} minimum value is faster than the time for V_{DD} to reach 1.7 V, then PA0 should be kept low to cover both conditions: until V_{CAP_1} and V_{CAP_2} reach V_{12} minimum value and until V_{DD} reaches 1.7 V (see *Figure 8*).
- Otherwise, if the time for V_{CAP_1} and V_{CAP_2} to reach V_{12} minimum value is slower than the time for V_{DD} to reach 1.7 V, then PA0 could be asserted low externally (see *Figure 9*).
- If V_{CAP_1} and V_{CAP_2} go below V_{12} minimum value and V_{DD} is higher than 1.7 V, then a reset must be asserted on PA0 pin.

Note: The minimum value of V_{12} depends on the maximum frequency targeted in the application.

Figure 8. Startup in regulator OFF: slow V_{DD} slope power-down reset risen after V_{CAP_1}/V_{CAP_2} stabilization

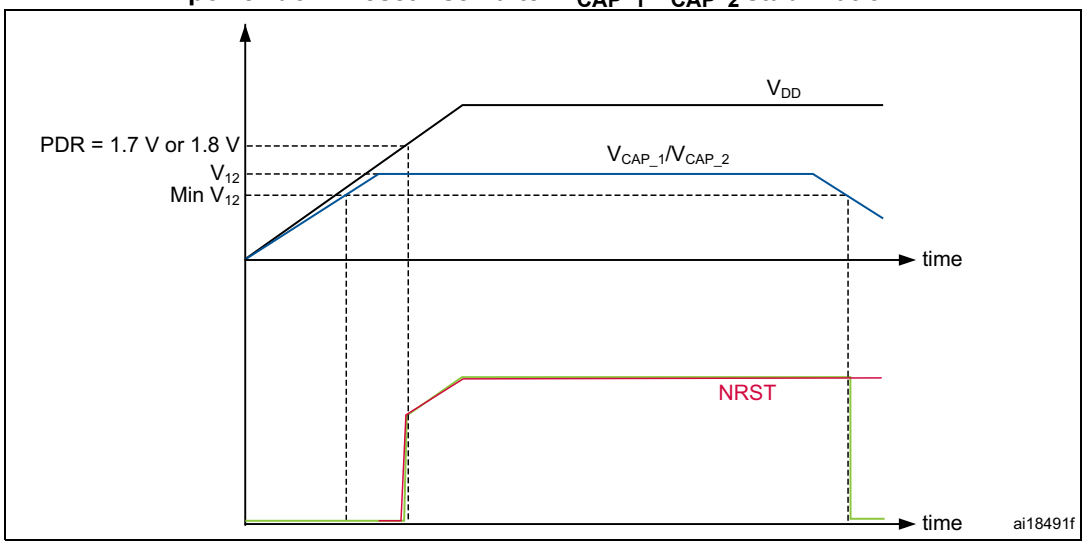

1. This figure is valid whatever the internal reset mode (ON or OFF).

Figure 9. Startup in regulator OFF mode: fast V_{DD} slope power-down reset risen before V_{CAP_1}/V_{CAP_2} stabilization

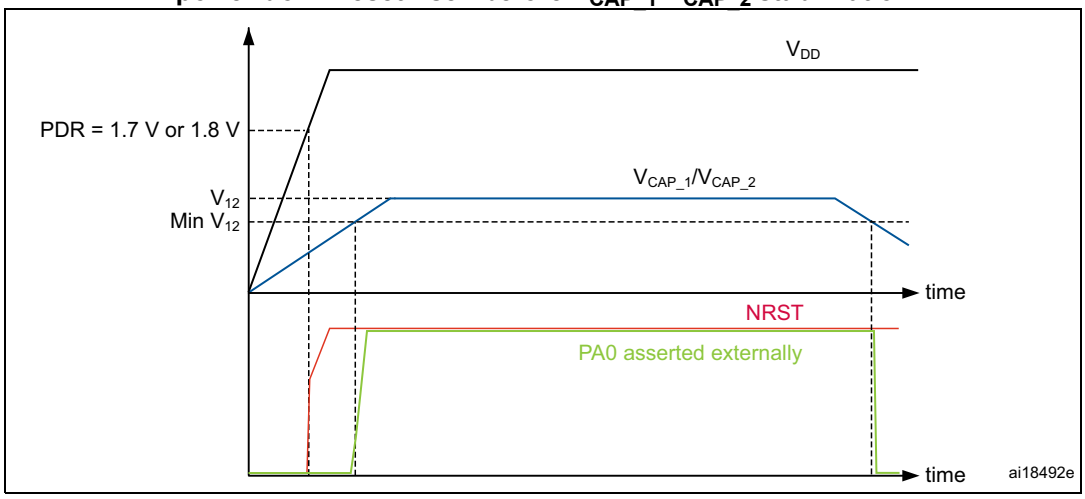

1. This figure is valid whatever the internal reset mode (ON or OFF).

3.17.3 Regulator ON/OFF and internal reset ON/OFF availability

Table 4. Regulator ON/OFF and internal reset ON/OFF availability

Package	Regulator ON	Regulator OFF	Internal reset ON	Internal reset OFF
LQFP64 LQFP100	Yes	No	Yes	No

Table 4. Regulator ON/OFF and internal reset ON/OFF availability

Package	Regulator ON	Regulator OFF	Internal reset ON	Internal reset OFF
LQFP144	Yes	No	Yes PDR_ON set to V_{DD}	Yes PDR_ON set to VSS
UFBGA144	Yes BYPASS_REG set to Vss	Yes BYPASS_REG set to VDD		
WLCSP81				

3.18 Real-time clock (RTC), backup SRAM and backup registers

The backup domain includes:

- The real-time clock (RTC)
- 4 Kbytes of backup SRAM
- 20 backup registers

The real-time clock (RTC) is an independent BCD timer/counter. Dedicated registers contain the second, minute, hour (in 12/24 hour), week day, date, month, year, in BCD (binary-coded decimal) format. Correction for 28, 29 (leap year), 30, and 31 day of the month are performed automatically. The RTC provides a programmable alarm and programmable periodic interrupts with wakeup from Stop and Standby modes. The sub-seconds value is also available in binary format.

It is clocked by a 32.768 kHz external crystal, resonator or oscillator, the internal low-power RC oscillator or the high-speed external clock divided by 128. The internal low-speed RC has a typical frequency of 32 kHz. The RTC can be calibrated using an external 512 Hz output to compensate for any natural quartz deviation.

Two alarm registers are used to generate an alarm at a specific time and calendar fields can be independently masked for alarm comparison. To generate a periodic interrupt, a 16-bit programmable binary auto-reload downcounter with programmable resolution is available and allows automatic wakeup and periodic alarms from every 120 µs to every 36 hours.

A 20-bit prescaler is used for the time base clock. It is by default configured to generate a time base of 1 second from a clock at 32.768 kHz.

The 4-Kbyte backup SRAM is an EEPROM-like memory area. It can be used to store data which need to be retained in VBAT and standby mode. This memory area is disabled by default to minimize power consumption (see *Section 3.19: Low-power modes*). It can be enabled by software.

The backup registers are 32-bit registers used to store 80 bytes of user application data when V_{DD} power is not present. Backup registers are not reset by a system, a power reset, or when the device wakes up from the Standby mode (see *Section 3.19: Low-power modes*).

Additional 32-bit registers contain the programmable alarm subseconds, seconds, minutes, hours, day, and date.

Like backup SRAM, the RTC and backup registers are supplied through a switch that is powered either from the V_{DD} supply when present or from the V_{BAT} pin.

3.19 Low-power modes

The devices support three low-power modes to achieve the best compromise between low power consumption, short startup time and available wakeup sources:

- **Sleep mode**

  In Sleep mode, only the CPU is stopped. All peripherals continue to operate and can wake up the CPU when an interrupt/event occurs.

- **Stop mode**

  The Stop mode achieves the lowest power consumption while retaining the contents of SRAM and registers. All clocks in the 1.2 V domain are stopped, the PLL, the HSI RC and the HSE crystal oscillators are disabled.

  The voltage regulator can be put either in main regulator mode (MR) or in low-power mode (LPR). Both modes can be configured as follows (see *Table 5: Voltage regulator modes in stop mode*):

  – Normal mode (default mode when MR or LPR is enabled)

  – Under-drive mode.

  The device can be woken up from the Stop mode by any of the EXTI line (the EXTI line source can be one of the 16 external lines, the PVD output, the RTC alarm / wakeup / tamper / time stamp events, the USB OTG FS/HS wakeup).

Table 5. Voltage regulator modes in stop mode

Voltage regulator configuration	Main regulator (MR)	Low-power regulator (LPR)
Normal mode	MR ON	LPR ON
Under-drive mode	MR in under-drive mode	LPR in under-drive mode

- **Standby mode**

  The Standby mode is used to achieve the lowest power consumption. The internal voltage regulator is switched off so that the entire 1.2 V domain is powered off. The PLL, the HSI RC and the HSE crystal oscillators are also switched off. After entering Standby mode, the SRAM and register contents are lost except for registers in the backup domain and the backup SRAM when selected.

  The device exits the Standby mode when an external reset (NRST pin), an IWDG reset, a rising edge on the WKUP pin, or an RTC alarm / wakeup / tamper /time stamp event occurs.

  The standby mode is not supported when the embedded voltage regulator is bypassed and the 1.2 V domain is controlled by an external power.

3.20 V_{BAT} operation

The V_{BAT} pin allows to power the device V_{BAT} domain from an external battery, an external supercapacitor, or from V_{DD} when no external battery and an external supercapacitor are present.

V_{BAT} operation is activated when V_{DD} is not present.

The V_{BAT} pin supplies the RTC, the backup registers and the backup SRAM.

Note: When the microcontroller is supplied from V_{BAT}, external interrupts and RTC alarm/events do not exit it from V_{BAT} operation.

When PDR_ON pin is not connected to V_{DD} (Internal Reset OFF), the V_{BAT} functionality is no more available and V_{BAT} pin should be connected to V_{DD}.

3.21 Timers and watchdogs

The devices include two advanced-control timers, eight general-purpose timers, two basic timers and two watchdog timers.

All timer counters can be frozen in debug mode.

Table 6 compares the features of the advanced-control, general-purpose and basic timers.

Table 6. Timer feature comparison

Timer type	Timer	Counter resolution	Counter type	Prescaler factor	DMA request generation	Capture/ compare channels	Complementary output	Max interface clock (MHz)	Max timer clock (MHz)(1)
Advanced-control	TIM1, TIM8	16-bit	Up, Down, Up/down	Any integer between 1 and 65536	Yes	4	Yes	90	180
General purpose	TIM2, TIM5	32-bit	Up, Down, Up/down	Any integer between 1 and 65536	Yes	4	No	45	90/180
	TIM3, TIM4	16-bit	Up, Down, Up/down	Any integer between 1 and 65536	Yes	4	No	45	90/180
	TIM9	16-bit	Up	Any integer between 1 and 65536	No	2	No	90	180
	TIM10, TIM11	16-bit	Up	Any integer between 1 and 65536	No	1	No	90	180
	TIM12	16-bit	Up	Any integer between 1 and 65536	No	2	No	45	90/180
	TIM13, TIM14	16-bit	Up	Any integer between 1 and 65536	No	1	No	45	90/180
Basic	TIM6, TIM7	16-bit	Up	Any integer between 1 and 65536	Yes	0	No	45	90/180

1. **The maximum timer clock is either 90 or 180 MHz depending on TIMPRE bit configuration in the RCC_DCKCFGR register.**

3.21.1 Advanced-control timers (TIM1, TIM8)

The advanced-control timers (TIM1, TIM8) can be seen as three-phase PWM generators multiplexed on 6 channels. They have complementary PWM outputs with programmable inserted dead times. They can also be considered as complete general-purpose timers. Their 4 independent channels can be used for:

- Input capture
- Output compare
- PWM generation (edge- or center-aligned modes)
- One-pulse mode output

If configured as standard 16-bit timers, they have the same features as the general-purpose TIMx timers. If configured as 16-bit PWM generators, they have full modulation capability (0-100%).

The advanced-control timer can work together with the TIMx timers via the Timer Link feature for synchronization or event chaining.

TIM1 and TIM8 support independent DMA request generation.

3.21.2 General-purpose timers (TIMx)

There are ten synchronized general-purpose timers embedded in the STM32F446xC/E devices (see *Table 6* for differences).

- **TIM2, TIM3, TIM4, TIM5**

  The STM32F446xC/E include 4 full-featured general-purpose timers: TIM2, TIM5, TIM3, and TIM4.The TIM2 and TIM5 timers are based on a 32-bit auto-reload up/downcounter and a 16-bit prescaler. The TIM3 and TIM4 timers are based on a 16-bit auto-reload up/downcounter and a 16-bit prescaler. They all feature 4 independent channels for input capture/output compare, PWM or one-pulse mode output. This gives up to 16 input capture/output compare/PWMs on the largest packages.

  The TIM2, TIM3, TIM4, TIM5 general-purpose timers can work together, or with the other general-purpose timers and the advanced-control timers TIM1 and TIM8 via the Timer Link feature for synchronization or event chaining.

  Any of these general-purpose timers can be used to generate PWM outputs.

  TIM2, TIM3, TIM4, TIM5 all have independent DMA request generation. They are capable of handling quadrature (incremental) encoder signals and the digital outputs from 1 to 4 hall-effect sensors.

- **TIM9, TIM10, TIM11, TIM12, TIM13, and TIM14**

  These timers are based on a 16-bit auto-reload upcounter and a 16-bit prescaler. TIM10, TIM11, TIM13, and TIM14 feature one independent channel, whereas TIM9 and TIM12 have two independent channels for input capture/output compare, PWM or one-pulse mode output. They can be synchronized with the TIM2, TIM3, TIM4, TIM5 full-featured general-purpose timers. They can also be used as simple time bases.

3.21.3 Basic timers TIM6 and TIM7

These timers are mainly used for DAC trigger and waveform generation. They can also be used as a generic 16-bit time base.

TIM6 and TIM7 support independent DMA request generation.

3.21.4 Independent watchdog

The independent watchdog is based on a 12-bit downcounter and 8-bit prescaler. It is clocked from an independent 32 kHz internal RC and as it operates independently from the main clock, it can operate in Stop and Standby modes. It can be used either as a watchdog to reset the device when a problem occurs, or as a free-running timer for application timeout management. It is hardware- or software-configurable through the option bytes.

3.21.5 Window watchdog

The window watchdog is based on a 7-bit downcounter that can be set as free-running. It can be used as a watchdog to reset the device when a problem occurs. It is clocked from the main clock. It has an early warning interrupt capability and the counter can be frozen in debug mode.

3.21.6 SysTick timer

This timer is dedicated to real-time operating systems, but could also be used as a standard downcounter. It features:

- A 24-bit downcounter
- Autoreload capability
- Maskable system interrupt generation when the counter reaches 0
- Programmable clock source.

3.22 Inter-integrated circuit interface (I^2C)

Four I²C bus interfaces can operate in multimaster and slave modes. Three I²C can support the standard (up to 100 KHz) and fast (up to 400 KHz) modes.
One I²C can support the standard (up to 100 KHz), fast (up to 400 KHz) and fast mode plus (up to 1MHz) modes.

They (all I²C) support the 7/10-bit addressing mode and the 7-bit dual addressing mode (as slave).
A hardware CRC generation/verification is embedded.
They can be served by DMA and they support SMBus 2.0/PMBus.

The devices also include programmable analog and digital noise filters (see *Table 7*).

Table 7. Comparison of I2C analog and digital filters

-	Analog filter	Digital filter
Pulse width of suppressed spikes	≥ 50 ns	Programmable length from 1 to 15 I2C peripheral clocks

3.23 Universal synchronous/asynchronous receiver transmitters (USART)

The devices embed four universal synchronous/asynchronous receiver transmitters (USART1, USART2, USART3 and USART6) and four universal asynchronous receiver transmitters (UART4, and UART5).

These six interfaces provide asynchronous communication, IrDA SIR ENDEC support, multiprocessor communication mode, single-wire half-duplex communication mode and have LIN Master/Slave capability. The USART1 and USART6 interfaces are able to communicate at speeds of up to 11.25 Mbit/s. The other available interfaces communicate at up to 5.62 bit/s.

USART1, USART2, USART3 and USART6 also provide hardware management of the CTS and RTS signals, Smart Card mode (ISO 7816 compliant) and SPI-like communication capability. All interfaces can be served by the DMA controller.

Table 8. USART feature comparison(1)

USART name	Standard features	Modem (RTS/CTS)	LIN	SPI master	irDA	Smartcard (ISO 7816)	Max. baud rate in Mbit/s (oversampling by 16)	Max. baud rate in Mbit/s (oversampling by 8)	APB mapping
USART1	X	X	X	X	X	X	5.62	11.25	APB2 (max. 90 MHz)
USART2	X	X	X	X	X	X	2.81	5.62	APB1 (max. 45 MHz)
USART3	X	X	X	X	X	X	2.81	5.62	APB1 (max. 45 MHz)
UART4	X	X	X	-	X	-	2.81	5.62	APB1 (max. 45 MHz)
UART5	X	X	X	-	X	-	2.81	5.62	APB1 (max. 45 MHz)
USART6	X	X	X	X	X	X	5.62	11.25	APB2 (max. 90 MHz)

1. X = feature supported.

3.24 Serial peripheral interface (SPI)

The devices feature up to four SPIs in slave and master modes in full-duplex and simplex communication modes. SPI1, and SPI4 can communicate at up to 45 Mbits/s, SPI2 and SPI3 can communicate at up to 22.5 Mbit/s. The 3-bit prescaler gives 8 master mode frequencies and the frame is configurable to 8 bits or 16 bits. The hardware CRC generation/verification supports basic SD Card/MMC modes. All SPIs can be served by the DMA controller.

The SPI interface can be configured to operate in TI mode for communications in master mode and slave mode.

3.25 HDMI (high-definition multimedia interface) consumer electronics control (CEC)

The devices embeds a HDMI-CEC controller that provides hardware support of consumer electronics control (CEC) (Appendix supplement 1 to the HDMI standard).
This protocol provides high-level control functions between all audiovisual products in an environment. It is specified to operate at low speeds with minimum processing and memory overhead.

3.26 Inter-integrated sound (I^2S)

Three standard I^2S interfaces (multiplexed with SPI1, SPI2 and SPI3) are available. They can be operated in master or slave mode, in simplex communication modes, and can be configured to operate with a 16-/32-bit resolution as an input or output channel. Audio sampling frequencies from 8 kHz up to 192 kHz are supported. When either or both of the I^2S interfaces is/are configured in master mode, the master clock can be output to the external DAC/CODEC at 256 times the sampling frequency.

All I2Sx can be served by the DMA controller.

3.27 SPDIF-RX Receiver Interface (SPDIFRX)

The SPDIF-RX peripheral, is designed to receive an S/PDIF flow compliant with IEC-60958 and IEC-61937. These standards support simple stereo streams up to high sample rate, and compressed multi-channel surround sound, such as those defined by Dolby or DTS (up to 5.1).

The main features of the SPDIF-RX are the following:

- Up to 4 inputs available
- Automatic symbol rate detection
- Maximum symbol rate: 12.288 MHz
- Stereo stream from 32 to 192 kHz supported
- Supports Audio IEC-60958 and IEC-61937, consumer applications
- Parity bit management
- Communication using DMA for audio samples
- Communication using DMA for control and user channel information
- Interrupt capabilities

The SPDIF-RX receiver provides all the necessary features to detect the symbol rate, and decode the incoming data stream.

The user can select the wanted SPDIF input, and when a valid signal will be available, the SPDIF-RX will re-sample the incoming signal, decode the Manchester stream, recognize frames, sub-frames and blocks elements. It delivers to the CPU decoded data, and associated status flags.

The SPDIF-RX also offers a signal named spdifrx_frame_sync, which toggles at the S/PDIF sub-frame rate that will be used to compute the exact sample rate for clock drift algorithms.

3.28 Serial Audio interface (SAI)

The devices feature two serial audio interfaces (SAI1 and SAI2). Each serial audio interfaces based on two independent audio sub blocks which can operate as transmitter or receiver with their FIFO. Many audio protocols are supported by each block: I2S standards, LSB or MSB-justified, PCM/DSP, TDM, AC'97 and SPDIF output, supporting audio sampling frequencies from 8 kHz up to 192 kHz. Both sub blocks can be configured in master or in slave mode. The SAIs use a PLL to achieve audio class accuracy.

In master mode, the master clock can be output to the external DAC/CODEC at 256 times of the sampling frequency.

The two sub blocks can be configured in synchronous mode when full-duplex mode is required.

SAI1 and SA2 can be served by the DMA controller.

3.29 Audio PLL (PLLI^{2}S)

The devices feature an additional dedicated PLL for audio I^{2}S and SAI applications. It allows to achieve error-free I^{2}S sampling clock accuracy without compromising on the CPU performance, while using USB peripherals.

The PLLI2S configuration can be modified to manage an I^{2}S/SAI sample rate change without disabling the main PLL (PLL) used for CPU, USB and Ethernet interfaces.

The audio PLL can be programmed with very low error to obtain sampling rates ranging from 8 KHz to 192 KHz.

In addition to the audio PLL, a master clock input pin can be used to synchronize the I^{2}S/SAI flow with an external PLL (or Codec output).

3.30 Serial Audio Interface PLL(PLLSAI)

An additional PLL dedicated to audio and USB is used for SAI1 and SAI2 peripheral in case the PLLI2S is programmed to achieve another audio sampling frequency (49.152 MHz or 11.2896 MHz) and the audio application requires both sampling frequencies simultaneously.

The PLLSAI is also used to generate the 48MHz clock for USB FS and SDIO in case the system PLL is programmed with factors not multiple of 48MHz.

3.31 Secure digital input/output interface (SDIO)

An SD/SDIO/MMC host interface is available, that supports MultiMediaCard System Specification Version 4.2 in three different databus modes: 1-bit (default), 4-bit and 8-bit.

The interface allows data transfer at up to 48 MHz, and is compliant with the SD Memory Card Specification Version 2.0.

The SDIO Card Specification Version 2.0 is also supported with two different databus modes: 1-bit (default) and 4-bit.

The current version supports only one SD/SDIO/MMC4.2 card at any one time and a stack of MMC4.1 or previous.

3.32 Controller area network (bxCAN)

The two CANs are compliant with the 2.0A and B (active) specifications with a bitrate up to 1 Mbit/s. They can receive and transmit standard frames with 11-bit identifiers as well as extended frames with 29-bit identifiers. Each CAN has three transmit mailboxes, two receive FIFOS with 3 stages and 28 shared scalable filter banks (all of them can be used even if one CAN is used). 256 bytes of SRAM are allocated for each CAN.

3.33 Universal serial bus on-the-go full-speed (OTG_FS)

The devices embed an USB OTG full-speed device/host/OTG peripheral with integrated transceivers. The USB OTG FS peripheral is compliant with the USB 2.0 specification and with the OTG 1.0 specification. It has software-configurable endpoint setting and supports suspend/resume. The USB OTG full-speed controller requires a dedicated 48 MHz clock that is generated by a PLL connected to the HSE oscillator. The USB has dedicated power rails allowing its use throughout the entire power range. The major features are:

- Combined Rx and Tx FIFO size of 320 × 35 bits with dynamic FIFO sizing
- Supports the session request protocol (SRP) and host negotiation protocol (HNP)
- 6 bidirectional endpoints
- 12 host channels with periodic OUT support
- HNP/SNP/IP inside (no need for any external resistor)
- For OTG/Host modes, a power switch is needed in case bus-powered devices are connected

3.34 Universal serial bus on-the-go high-speed (OTG_HS)

The devices embed a USB OTG high-speed (up to 480 Mb/s) device/host/OTG peripheral. The USB OTG HS supports both full-speed and high-speed operations. It integrates the transceivers for full-speed operation (12 MB/s) and features a UTMI low-pin interface (ULPI) for high-speed operation (480 MB/s). When using the USB OTG HS in HS mode, an external PHY device connected to the ULPI is required.

The USB OTG HS peripheral is compliant with the USB 2.0 specification and with the OTG 1.0 specification. It has software-configurable endpoint setting and supports suspend/resume. The USB OTG full-speed controller requires a dedicated 48 MHz clock that is generated by a PLL connected to the HSE oscillator. The USB has dedicated power rails allowing its use throughout the entire power range.

The major features are:

- Combined Rx and Tx FIFO size of 1 Kbit × 35 with dynamic FIFO sizing
- Supports the session request protocol (SRP) and host negotiation protocol (HNP)
- 8 bidirectional endpoints
- 16 host channels with periodic OUT support
- Internal FS OTG PHY support
- External HS or HS OTG operation supporting ULPI in SDR mode. The OTG PHY is connected to the microcontroller ULPI port through 12 signals. It can be clocked using the 60 MHz output.
- Internal USB DMA
- HNP/SNP/IP inside (no need for any external resistor)
- for OTG/Host modes, a power switch is needed in case bus-powered devices are connected

3.35 Digital camera interface (DCMI)

The devices embed a camera interface that can connect with camera modules and CMOS sensors through an 8-bit to 14-bit parallel interface, to receive video data. The camera interface can sustain a data transfer rate up to 94.5 Mbyte/s (in 14-bit mode) at 54 MHz.

Its features:

- Programmable polarity for the input pixel clock and synchronization signals
- Parallel data communication can be 8-, 10-, 12- or 14-bit
- Supports 8-bit progressive video monochrome or raw bayer format, YCbCr 4:2:2 progressive video, RGB 565 progressive video or compressed data (like JPEG)
- Supports continuous mode or snapshot (a single frame) mode
- Capability to automatically crop the image black & white.

3.36 General-purpose input/outputs (GPIOs)

Each of the GPIO pins can be configured by software as output (push-pull or open-drain, with or without pull-up or pull-down), as input (floating, with or without pull-up or pull-down) or as peripheral alternate function. Most of the GPIO pins are shared with digital or analog alternate functions. All GPIOs are high-current-capable and have speed selection to better manage internal noise, power consumption and electromagnetic emission.

The I/O configuration can be locked if needed by following a specific sequence in order to avoid spurious writing to the I/Os registers.

Fast I/O handling allowing maximum I/O toggling up to 90 MHz.

3.37 Analog-to-digital converters (ADCs)

Three 12-bit analog-to-digital converters are embedded and each ADC shares up to 16 external channels, performing conversions in the single-shot or scan mode. In scan mode, automatic conversion is performed on a selected group of analog inputs.

Additional logic functions embedded in the ADC interface allow:

- Simultaneous sample and hold
- Interleaved sample and hold

The ADC can be served by the DMA controller. An analog watchdog feature allows very precise monitoring of the converted voltage of one, some or all selected channels. An interrupt is generated when the converted voltage is outside the programmed thresholds.

To synchronize A/D conversion and timers, the ADCs could be triggered by any of TIM1, TIM2, TIM3, TIM4, TIM5, or TIM8 timer.

3.38 Temperature sensor

The temperature sensor has to generate a voltage that varies linearly with temperature. The conversion range is between 1.7 V and 3.6 V. The temperature sensor is internally connected to the same input channel as V_{BAT}, ADC1_IN18, which is used to convert the sensor output voltage into a digital value. When the temperature sensor and V_{BAT} conversion are enabled at the same time, only V_{BAT} conversion is performed.

As the offset of the temperature sensor varies from chip to chip due to process variation, the internal temperature sensor is mainly suitable for applications that detect temperature changes instead of absolute temperatures. If an accurate temperature reading is needed, then an external temperature sensor part should be used.

3.39 Digital-to-analog converter (DAC)

The two 12-bit buffered DAC channels can be used to convert two digital signals into two analog voltage signal outputs.

This dual digital Interface supports the following features:

- two DAC converters: one for each output channel
- 8-bit or 10-bit monotonic output
- left or right data alignment in 12-bit mode
- synchronized update capability
- noise-wave generation
- triangular-wave generation
- dual DAC channel independent or simultaneous conversions
- DMA capability for each channel
- external triggers for conversion
- input voltage reference V_{REF+}

Eight DAC trigger inputs are used in the device. The DAC channels are triggered through the timer update outputs that are also connected to different DMA streams.

3.40 Serial wire JTAG debug port (SWJ-DP)

The ARM SWJ-DP interface is embedded, and is a combined JTAG and serial wire debug port that enables either a serial wire debug or a JTAG probe to be connected to the target.

Debug is performed using 2 pins only instead of 5 required by the JTAG (JTAG pins could be re-use as GPIO with alternate function): the JTAG TMS and TCK pins are shared with SWDIO and SWCLK, respectively, and a specific sequence on the TMS pin is used to switch between JTAG-DP and SW-DP.

3.41 Embedded Trace Macrocell™

The ARM Embedded Trace Macrocell provides a greater visibility of the instruction and data flow inside the CPU core by streaming compressed data at a very high rate from the STM32F446xx through a small number of ETM pins to an external hardware trace port analyser (TPA) device. The TPA is connected to a host computer using USB, Ethernet, or any other high-speed channel. Real-time instruction and data flow activity can be recorded and then formatted for display on the host computer that runs the debugger software. TPA hardware is commercially available from common development tool vendors.

The Embedded Trace Macrocell operates with third party debugger software tools.

4 Pinout and pin description

Figure 10. STM32F446xC/xE LQFP64 pinout

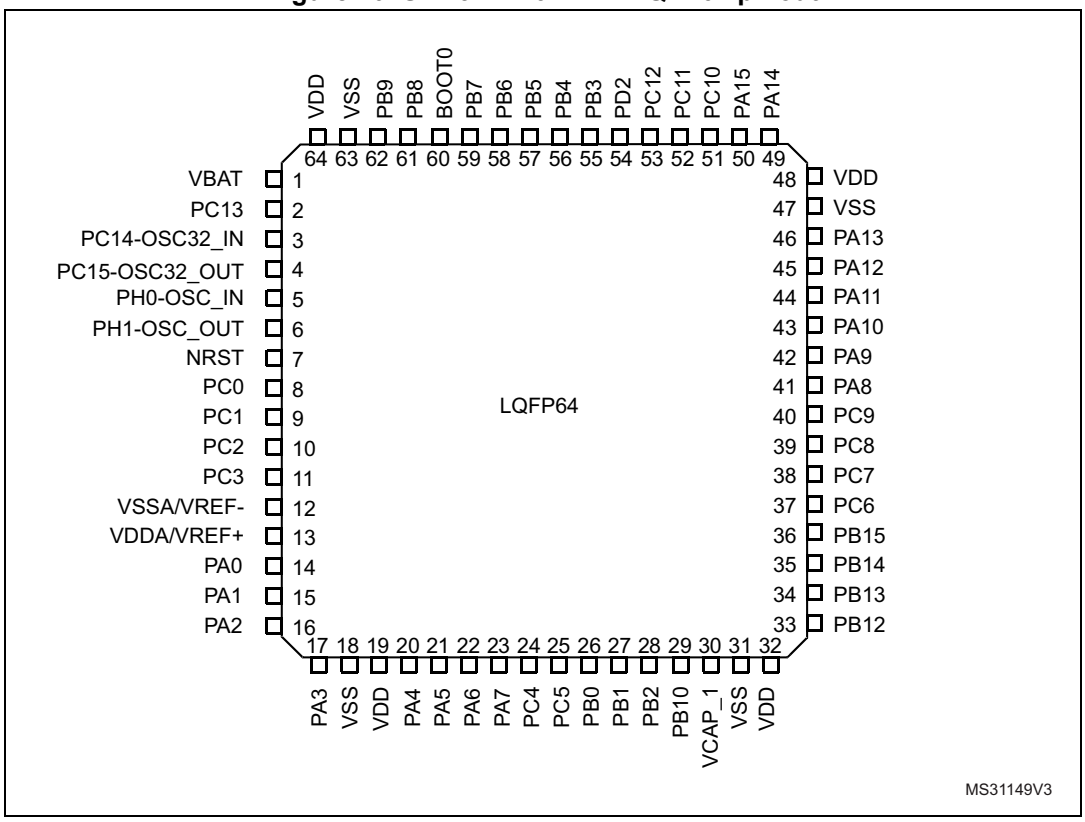

1. The above figure shows the package top view.

Figure 11. STM32F446xC/xE LQFP100 pinout

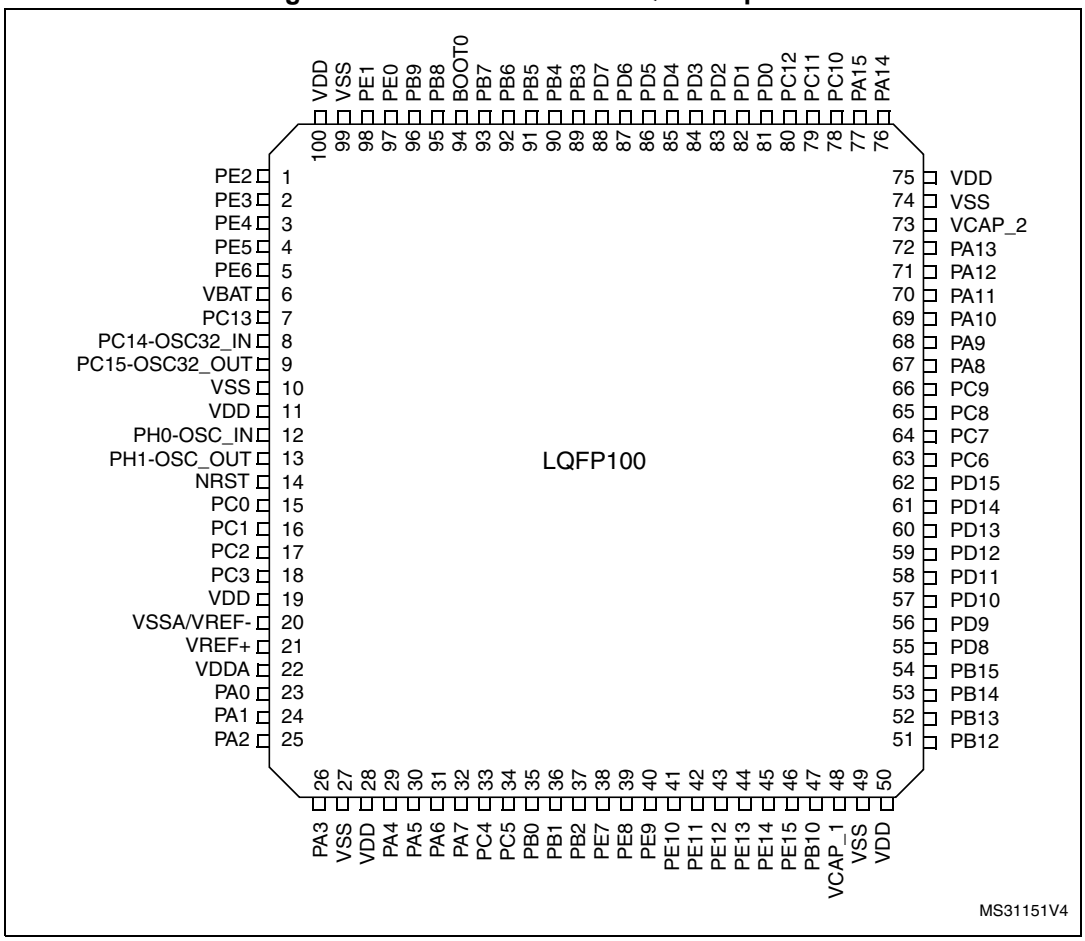

1. The above figure shows the package top view.

Figure 12. STM32F446xC LQFP144 pinout

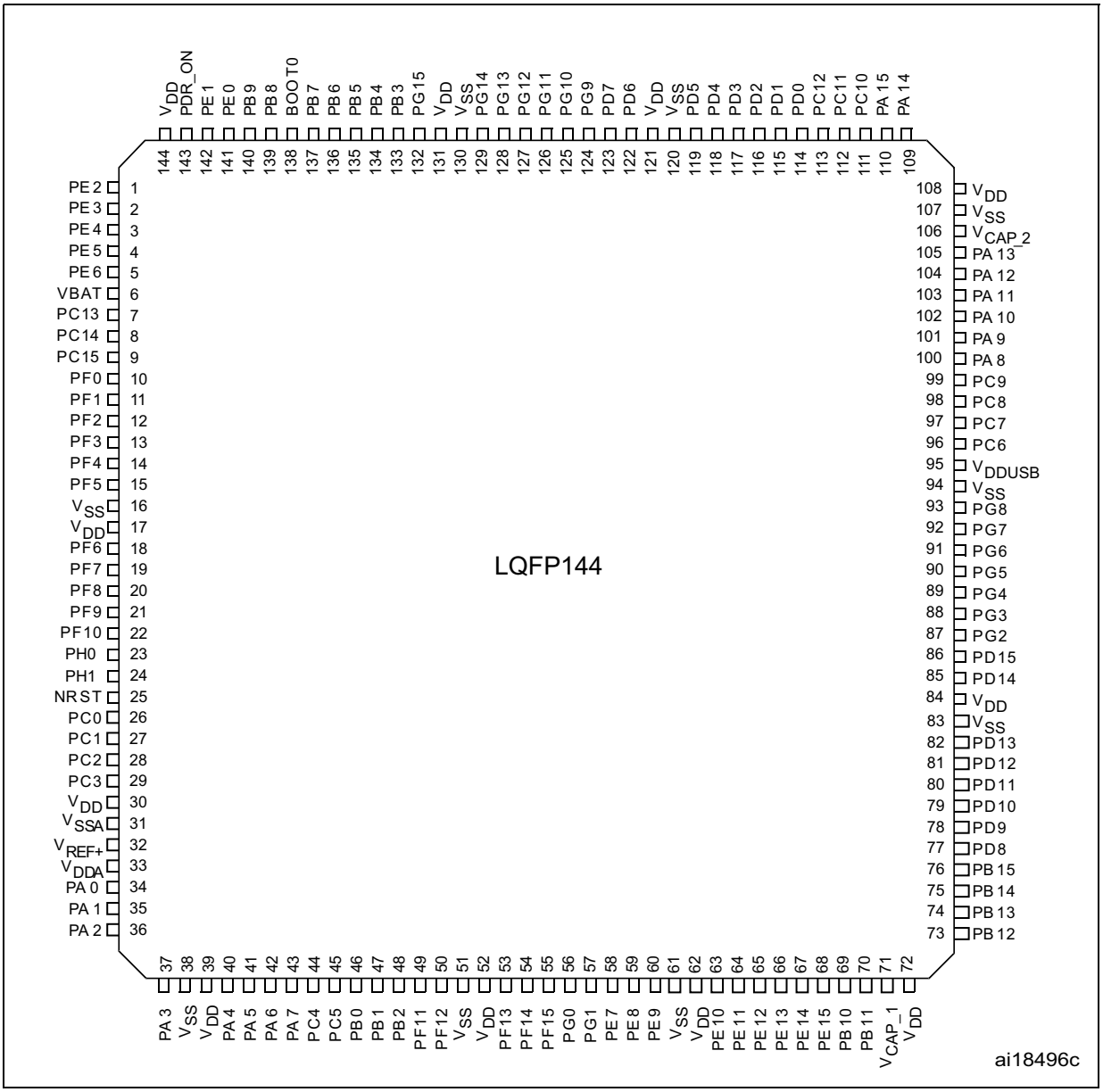

1. The above figure shows the package top view.

Figure 13. STM32F446xC/xE WLCSP81 ballout

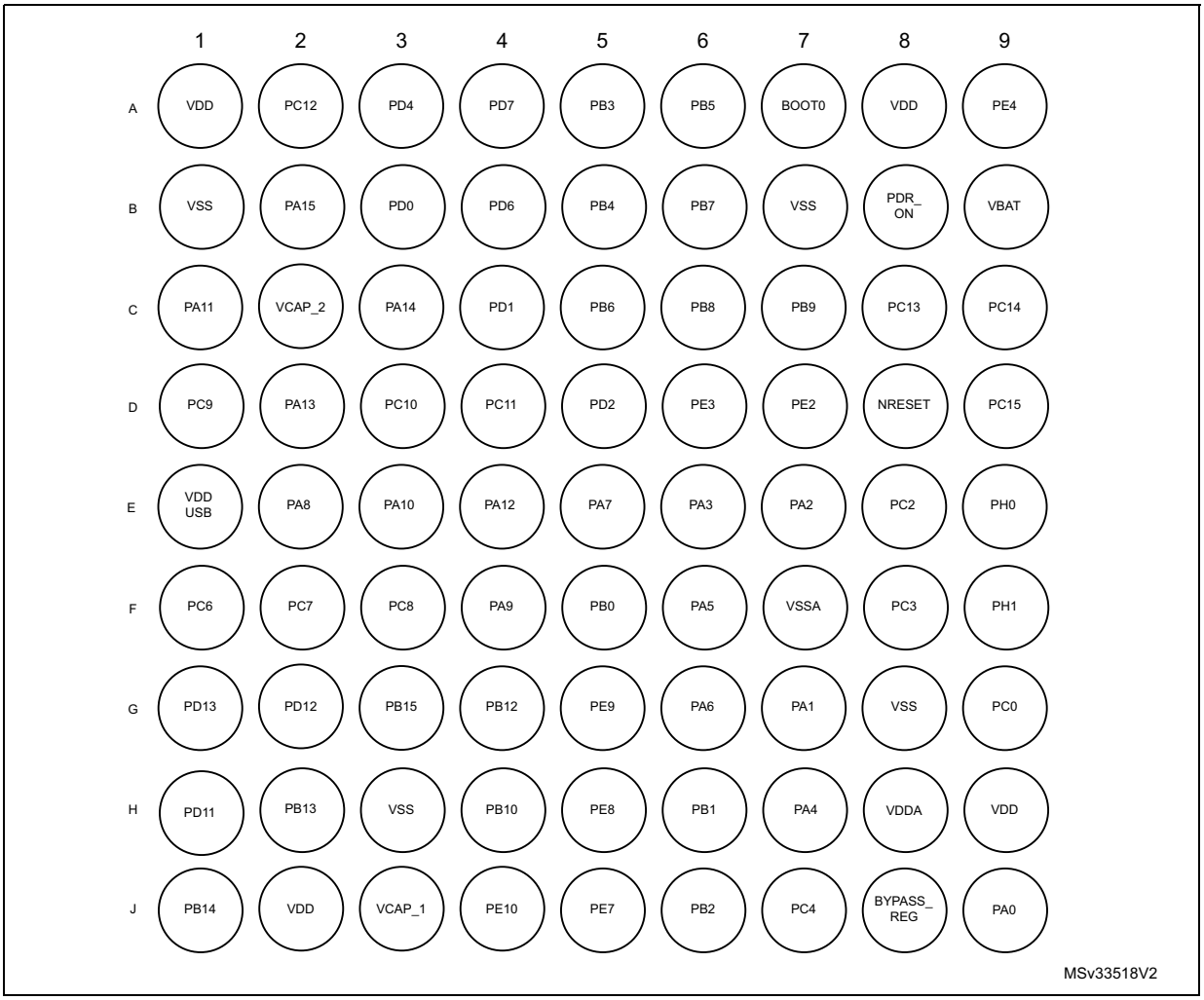

1. The above figure shows the package top view.

Figure 14. STM32F446xC/xE UFBGA144 ballout

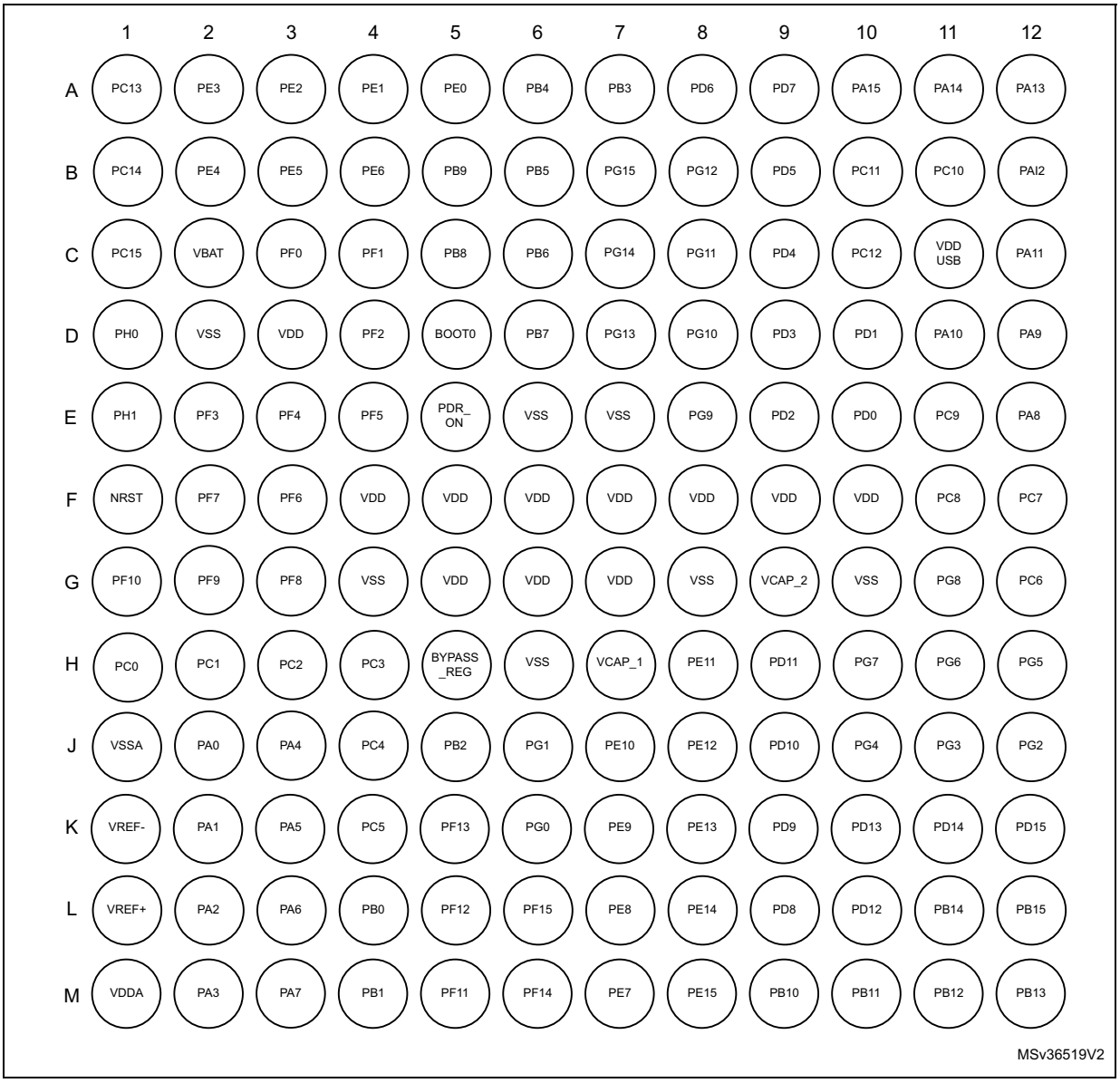

1. The above picture shows the package top view.

Table 9. Legend/abbreviations used in the pinout table

Name	Abbreviation	Definition
Pin name	Unless otherwise specified in brackets below the pin name, the pin function during and after reset is the same as the actual pin name	
Pin type	S	Supply pin
	I	Input only pin
	I/O	Input / output pin
I/O structure	FT	5 V tolerant I/O
	FTf	5V tolerant IO, I2C FM+ option
	TTa	3.3 V tolerant I/O directly connected to ADC
	B	Dedicated BOOT0 pin
	RST	Bidirectional reset pin with weak pull-up resistor
Notes	Unless otherwise specified by a note, all I/Os are set as floating inputs during and after reset	
Alternate functions	Functions selected through GPIOx_AFR registers	
Additional functions	Functions directly selected/enabled through peripheral registers	

Table 10. STM32F446xx pin and ball descriptions

Pin Number					Pin name (function after reset)	Pin type	I/O structure	Notes	Alternate functions	Additional functions
LQFP64	LQFP100	WLCSP 81	UFBGA144	LQFP144						
-	1	D7	A3	1	PE2	I/O	FT	-	TRACECLK, SPI4_SCK, SAI1_MCLK_A, QUADSPI_BK1_IO2, FMC_A23, EVENTOUT	-
-	2	D6	A2	2	PE3	I/O	FT	-	TRACED0, SAI1_SD_B, FMC_A19, EVENTOUT	-
-	3	A9	B2	3	PE4	I/O	FT	-	TRACED1, SPI4_NSS, SAI1_FS_A, FMC_A20, DCMI_D4, EVENTOUT	-
-	4	-	B3	4	PE5	I/O	FT	-	TRACED2, TIM9_CH1, SPI4_MISO, SAI1_SCK_A, FMC_A21, DCMI_D6, EVENTOUT	-

Table 10. STM32F446xx pin and ball descriptions (continued)

Pin Number					Pin name (function after reset)	Pin type	I/O structure	Notes	Alternate functions	Additional functions
LQFP64	LQFP100	WLCSP 81	UFBGA144	LQFP144						
-	5	-	B4	5	PE6	I/O	FT	-	TRACED3, TIM9_CH2, SPI4_MOSI, SAI1_SD_A, FMC_A22, DCMI_D7, EVENTOUT	-
1	6	B9	C2	6	VBAT	S	-	-	-	-
2	7	C8	A1	7	PC13	I/O	FT	-	EVENTOUT	TAMP_1/WKUP1
3	8	C9	B1	8	PC14-OSC32_IN(PC14)	I/O	FT	-	EVENTOUT	OSC32_IN
4	9	D9	C1	9	PC15-OSC32_OUT(PC15)	I/O	FT	-	EVENTOUT	OSC32_OUT
-	-	-	C3	10	PF0	I/O	FT	-	I2C2_SDA, FMC_A0, EVENTOUT	-
-	-	-	C4	11	PF1	I/O	FT	-	I2C2_SCL, FMC_A1, EVENTOUT	-
-	-	-	D4	12	PF2	I/O	FT	-	I2C2_SMBA, FMC_A2, EVENTOUT	-
-	-	-	E2	13	PF3	I/O	FT	-	FMC_A3, EVENTOUT	ADC3_IN9
-	-	-	E3	14	PF4	I/O	FT	-	FMC_A4, EVENTOUT	ADC3_IN14
-	-	-	E4	15	PF5	I/O	FT	-	FMC_A5, EVENTOUT	ADC3_IN15
-	10	-	D2	16	VSS	S	-	-	-	-
-	11	-	D3	17	VDD	S	-	-	-	-
-	-	-	F3	18	PF6	I/O	FT	-	TIM10_CH1, SAI1_SD_B, QUADSPI_BK1_IO3, EVENTOUT	ADC3_IN4
-	-	-	F2	19	PF7	I/O	FT	-	TIM11_CH1, SAI1_MCLK_B, QUADSPI_BK1_IO2, EVENTOUT	ADC3_IN5
-	-	-	G3	20	PF8	I/O	FT	-	SAI1_SCK_B, TIM13_CH1, QUADSPI_BK1_IO0, EVENTOUT	ADC3_IN6
-	-	-	G2	21	PF9	I/O	FT	-	SAI1_FS_B, TIM14_CH1, QUADSPI_BK1_IO1, EVENTOUT	ADC3_IN7
-	-	-	G1	22	PF10	I/O	FT	-	DCMI_D11, EVENTOUT	ADC3_IN8
5	12	E9	D1	23	PH0-OSC_IN(PH0)	I/O	FT	-	EVENTOUT	OSC_IN

Table 10. STM32F446xx pin and ball descriptions (continued)

Pin Number					Pin name (function after reset)	Pin type	I/O structure	Notes	Alternate functions	Additional functions
LQFP64	LQFP100	WLCSP 81	UFBGA144	LQFP144						
6	13	F9	E1	24	PH1-OSC_OUT(PH1)	I/O	FT	-	EVENTOUT	OSC_OUT
7	14	D8	F1	25	NRST	I/O	RST	-	-	-
8	15	G9	H1	26	PC0	I/O	FT	-	SAI1_MCLK_B, OTG_HS_ULPI_STP, FMC_SDNWE, EVENTOUT	ADC123_IN10
9	16	-	H2	27	PC1	I/O	FT	-	SPI3_MOSI/I2S3_SD, SAI1_SD_A, SPI2_MOSI/I2S2_SD, EVENTOUT	ADC123_IN11
10	17	E8	H3	28	PC2	I/O	FT	-	SPI2_MISO, OTG_HS_ULPI_DIR, FMC_SDNE0, EVENTOUT	ADC123_IN12
11	18	F8	H4	29	PC3	I/O	FT	-	SPI2_MOSI/I2S2_SD, OTG_HS_ULPI_NXT, FMC_SDCKE0, EVENTOUT	ADC123_IN13
-	19	H9	-	30	VDD	S	-	-	-	-
-	-	G8	-	-	VSS	S	-	-	-	-
12	20	F7	J1	31	VSSA	S	-	-	-	-
-	-	-	K1	-	VREF-	S	-	-	-	-
-	21	-	L1	32	VREF+	S	-	-	-	-
13	22	H8	M1	33	VDDA	S	-	-	-	-
14	23	J9	J2	34	PA0-WKUP(PA0)	I/O	FT	-	TIM2_CH1/TIM2_ETR, TIM5_CH1, TIM8_ETR, USART2_CTS, UART4_TX, EVENTOUT	ADC123_IN0, WKUP0/TAMP_2
15	24	G7	K2	35	PA1	I/O	FT	-	TIM2_CH2, TIM5_CH2, USART2_RTS, UART4_RX, QUADSPI_BK1_IO3, SAI2_MCLK_B, EVENTOUT	ADC123_IN1
16	25	E7	L2	36	PA2	I/O	FT	-	TIM2_CH3, TIM5_CH3, TIM9_CH1, USART2_TX, SAI2_SCK_B, EVENTOUT	ADC123_IN2

Table 10. STM32F446xx pin and ball descriptions (continued)

Pin Number					Pin name (function after reset)	Pin type	I/O structure	Notes	Alternate functions	Additional functions
LQFP64	LQFP100	WLCSP 81	UFBGA144	LQFP144						
17	26	E6	M2	37	PA3	I/O	FT	-	TIM2_CH4, TIM5_CH4, TIM9_CH2, SAI1_FS_A, USART2_RX, OTG_HS_ULPI_D0, EVENTOUT	ADC123_IN3
18	27	-	G4	38	VSS	S	-	-	-	-
-	-	J8	H5	-	BYPASS_REG	I	FT	-	-	-
19	28	-	F4	39	VDD	S	-	-	-	-
20	29	H7	J3	40	PA4	I/O	TC	-	SPI1_NSS/I2S1_WS, SPI3_NSS/I2S3_WS, USART2_CK, OTG_HS_SOF, DCMI_HSYNC, EVENTOUT	ADC12_IN4, DAC_OUT1
21	30	F6	K3	41	PA5	I/O	TC	-	TIM2_CH1/TIM2_ETR, TIM8_CH1N, SPI1_SCK/I2S1_CK, OTG_HS_ULPI_CK, EVENTOUT	ADC12_IN5, DAC_OUT2
22	31	G6	L3	42	PA6	I/O	FT	-	TIM1_BKIN, TIM3_CH1, TIM8_BKIN, SPI1_MISO, I2S2_MCK, TIM13_CH1, DCMI_PIXCLK, EVENTOUT	ADC12_IN6
23	32	E5	M3	43	PA7	I/O	FT	-	TIM1_CH1N, TIM3_CH2, TIM8_CH1N, SPI1_MOSI/I2S1_SD, TIM14_CH1, FMC_SDNWE, EVENTOUT	ADC12_IN7
24	33	J7	J4	44	PC4	I/O	FT	-	I2S1_MCK, SPDIFRX_IN2, FMC_SDNE0, EVENTOUT	ADC12_IN14
25	34	-	K4	45	PC5	I/O	FT	-	USART3_RX, SPDIFRX_IN3, FMC_SDCKE0, EVENTOUT	ADC12_IN15

Table 10. STM32F446xx pin and ball descriptions (continued)

Pin Number					Pin name (function after reset)	Pin type	I/O structure	Notes	Alternate functions	Additional functions
LQFP64	LQFP100	WLCSP 81	UFBGA144	LQFP144						
26	35	F5	L4	46	PB0	I/O	FT	-	TIM1_CH2N, TIM3_CH3, TIM8_CH2N, SPI3_MOSI/I2S3_SD, UART4_CTS, OTG_HS_ULPI_D1, SDIO_D1, EVENTOUT	ADC12_IN8
27	36	H6	M4	47	PB1	I/O	FT	-	TIM1_CH3N, TIM3_CH4, TIM8_CH3N, OTG_HS_ULPI_D2, SDIO_D2, EVENTOUT	ADC12_IN9
28	37	J6	J5	48	PB2-BOOT1 (PB2)	I/O	FT	-	TIM2_CH4, SAI1_SD_A, SPI3_MOSI/I2S3_SD, QUADSPI_CLK, OTG_HS_ULPI_D4, SDIO_CK, EVENTOUT	-
-	-	-	M5	49	PF11	I/O	FT	-	SAI2_SD_B, FMC_SDNRAS, DCMI_D12, EVENTOUT	-
-	-	-	L5	50	PF12	I/O	FT	-	FMC_A6, EVENTOUT	-
-	-	-	-	51	VSS	S	-	-	-	-
-	-	-	G5	52	VDD	S	-	-	-	-
-	-	-	K5	53	PF13	I/O	FT	-	FMPI2C1_SMBA, FMC_A7, EVENTOUT	-
-	-	-	M6	54	PF14	I/O	FTf	-	FMPI2C1_SCL, FMC_A8, EVENTOUT	-
-	-	-	L6	55	PF15	I/O	FTf	-	FMPI2C1_SDA, FMC_A9, EVENTOUT	-
-	-	-	K6	56	PG0	I/O	FT	-	FMC_A10, EVENTOUT	-
-	-	-	J6	57	PG1	I/O	FT	-	FMC_A11, EVENTOUT	-
-	38	J5	M7	58	PE7	I/O	FT	-	TIM1_ETR, UART5_RX, QUADSPI_BK2_IO0, FMC_D4, EVENTOUT	-
-	39	H5	L7	59	PE8	I/O	FT	-	TIM1_CH1N, UART5_TX, QUADSPI_BK2_IO1, FMC_D5, EVENTOUT	-
-	40	G5	K7	60	PE9	I/O	FT	-	TIM1_CH1, QUADSPI_BK2_IO2, FMC_D6, EVENTOUT	-

Table 10. STM32F446xx pin and ball descriptions (continued)

Pin Number					Pin name (function after reset)	Pin type	I/O structure	Notes	Alternate functions	Additional functions
LQFP64	LQFP100	WLCSP 81	UFBGA144	LQFP144						
-	-	-	H6	61	VSS	S	-	-	-	-
-	-	-	G6	62	VDD	S	-	-	-	-
-	41	J4	J7	63	PE10	I/O	FT	-	TIM1_CH2N, QUADSPI_BK2_IO3, FMC_D7, EVENTOUT	-
-	42	-	H8	64	PE11	I/O	FT	-	TIM1_CH2, SPI4_NSS, SAI2_SD_B, FMC_D8, EVENTOUT	-
-	43	-	J8	65	PE12	I/O	FT	-	TIM1_CH3N, SPI4_SCK, SAI2_SCK_B, FMC_D9, EVENTOUT	-
-	44	-	K8	66	PE13	I/O	FT	-	TIM1_CH3, SPI4_MISO, SAI2_FS_B, FMC_D10, EVENTOUT	-
-	45	-	L8	67	PE14	I/O	FT	-	TIM1_CH4, SPI4_MOSI, SAI2_MCLK_B, FMC_D11, EVENTOUT	-
-	46	-	M8	68	PE15	I/O	FT	-	TIM1_BKIN, FMC_D12, EVENTOUT	-
29	47	H4	M9	69	PB10	I/O	FT	-	TIM2_CH3, I2C2_SCL, SPI2_SCK/I2S2_CK, SAI1_SCK_A, USART3_TX, OTG_HS_ULPI_D3, EVENTOUT	-
-	-	-	M10	70	PB11	I/O	FT	-	TIM2_CH4, I2C2_SDA, USART3_RX, SAI2_SD_A, EVENTOUT	-
30	48	J3	H7	71	VCAP_1	S	-	-	-	-
31	49	H3	-	-	VSS	S	-	-	-	-
32	50	J2	G7	72	VDD	S	-	-	-	-
33	51	G4	M11	73	PB12	I/O	FT	-	TIM1_BKIN, I2C2_SMBA, SPI2_NSS/I2S2_WS, SAI1_SCK_B, USART3_CK, CAN2_RX, OTG_HS_ULPI_D5, OTG_HS_ID, EVENTOUT	-

Table 10. STM32F446xx pin and ball descriptions (continued)

Pin Number					Pin name (function after reset)	Pin type	I/O structure	Notes	Alternate functions	Additional functions
LQFP64	LQFP100	WLCSP 81	UFBGA144	LQFP144						
34	52	H2	M12	74	PB13	I/O	FT	-	TIM1_CH1N, SPI2_SCK/I2S2_CK, USART3_CTS, CAN2_TX, OTG_HS_ULPI_D6, EVENTOUT	OTG_HS_VBUS
35	53	J1	L11	75	PB14(1)	I/O	FT	-	TIM1_CH2N, TIM8_CH2N, SPI2_MISO, USART3_RTS, TIM12_CH1, OTG_HS_DM, EVENTOUT	-
36	54	G3	L12	76	PB15(1)	I/O	FT	-	RTC_REFIN, TIM1_CH3N, TIM8_CH3N, SPI2_MOSI/I2S2_SD, TIM12_CH2, OTG_HS_DP, EVENTOUT	-
-	55	-	L9	77	PD8	I/O	FT	-	USART3_TX, SPDIFRX_IN1, FMC_D13, EVENTOUT	-
-	56	-	K9	78	PD9	I/O	FT	-	USART3_RX, FMC_D14, EVENTOUT	-
-	57	-	J9	79	PD10	I/O	FT	-	USART3_CK, FMC_D15, EVENTOUT	-
-	58	H1	H9	80	PD11	I/O	FT	-	FMPI2C1_SMBA, USART3_CTS, QUADSPI_BK1_IO0, SAI2_SD_A, FMC_A16, EVENTOUT	-
-	59	G2	L10	81	PD12	I/O	FTf	-	TIM4_CH1, FMPI2C1_SCL, USART3_RTS, QUADSPI_BK1_IO1, SAI2_FS_A, FMC_A17, EVENTOUT	-
-	60	G1	K10	82	PD13	I/O	FTf	-	TIM4_CH2, FMPI2C1_SDA, QUADSPI_BK1_IO3, SAI2_SCK_A, FMC_A18, EVENTOUT	-
-	-	-	G8	83	VSS	S	-	-	-	-
-	-	-	F8	84	VDD	S	-	-	-	-

Table 10. STM32F446xx pin and ball descriptions (continued)

Pin Number					Pin name (function after reset)	Pin type	I/O structure	Notes	Alternate functions	Additional functions
LQFP64	LQFP100	WLCSP 81	UFBGA144	LQFP144						
-	61	-	K11	85	PD14	I/O	FTf	-	TIM4_CH3, FMPI2C1_SCL, SAI2_SCK_A, FMC_D0, EVENTOUT	-
-	62	-	K12	86	PD15	I/O	FTf	-	TIM4_CH4, FMPI2C1_SDA, FMC_D1, EVENTOUT	-
-	-	-	J12	87	PG2	I/O	FT	-	FMC_A12, EVENTOUT	-
-	-	-	J11	88	PG3	I/O	FT	-	FMC_A13, EVENTOUT	-
-	-	-	J10	89	PG4	I/O	FT	-	FMC_A14/FMC_BA0, EVENTOUT	-
-	-	-	H12	90	PG5	I/O	FT	-	FMC_A15/FMC_BA1, EVENTOUT	-
-	-	-	H11	91	PG6	I/O	FT	-	QUADSPI_BK1_NCS, DCMI_D12, EVENTOUT	-
-	-	-	H10	92	PG7	I/O	FT	-	USART6_CK, FMC_INT, DCMI_D13, EVENTOUT	-
-	-	-	G11	93	PG8	I/O	FT	-	SPDIFRX_IN2, USART6_RTS, FMC_SDCLK, EVENTOUT	-
-	-	-	-	94	VSS	S	-	-	-	-
-	-	-	F10	-	VDD	S	-	-	-	-
-	-	E1	C11	95	VDDUSB	S	-	-	-	-
37	63	F1	G12	96	PC6	I/O	FTf	-	TIM3_CH1, TIM8_CH1, FMPI2C1_SCL, I2S2_MCK, USART6_TX, SDIO_D6, DCMI_D0, EVENTOUT	-
38	64	F2	F12	97	PC7	I/O	FTf	-	TIM3_CH2, TIM8_CH2, FMPI2C1_SDA, SPI2_SCK/I2S2_CK, I2S3_MCK, SPDIFRX_IN1, USART6_RX, SDIO_D7, DCMI_D1, EVENTOUT	-
39	65	F3	F11	98	PC8	I/O	FT	-	TRACED0, TIM3_CH3, TIM8_CH3, UART5_RTS, USART6_CK, SDIO_D0, DCMI_D2, EVENTOUT	-

Table 10. STM32F446xx pin and ball descriptions (continued)

Pin Number					Pin name (function after reset)	Pin type	I/O structure	Notes	Alternate functions	Additional functions
LQFP64	LQFP100	WLCSP 81	UFBGA144	LQFP144						
40	66	D1	E11	99	PC9	I/O	FT	-	MCO2, TIM3_CH4, TIM8_CH4, I2C3_SDA, I2S_CKIN, UART5_CTS, QUADSPI_BK1_IO0, SDIO_D1, DCMI_D3, EVENTOUT	-
41	67	E2	E12	100	PA8	I/O	FT	-	MCO1, TIM1_CH1, I2C3_SCL, USART1_CK, OTG_FS_SOF, EVENTOUT	-
42	68	F4	D12	101	PA9	I/O	FT	-	TIM1_CH2, I2C3_SMBA, SPI2_SCK/I2S2_CK, SAI1_SD_B, USART1_TX, DCMI_D0, EVENTOUT	OTG_FS_VBUS
43	69	E3	D11	102	PA10	I/O	FT	-	TIM1_CH3, USART1_RX, OTG_FS_ID, DCMI_D1, EVENTOUT	-
44	70	C1	C12	103	PA11(1)	I/O	FT	-	TIM1_CH4, USART1_CTS, CAN1_RX, OTG_FS_DM, EVENTOUT	-
45	71	E4	B12	104	PA12(1)	I/O	FT	-	TIM1_ETR, USART1_RTS, SAI2_FS_B, CAN1_TX, OTG_FS_DP, EVENTOUT	-
46	72	D2	A12	105	PA13(JTMS-SWDIO)	I/O	FT	-	JTMS-SWDIO, EVENTOUT	-
-	73	C2	G9	106	VCAP_2	S	-	-	-	-
47	74	B1	G10	107	VSS	S	-	-	-	-
48	75	A1	F9	108	VDD	S	-	-	-	-
49	76	C3	A11	109	PA14(JTCK-SWCLK)	I/O	FT	-	JTCK-SWCLK, EVENTOUT	-
50	77	B2	A10	110	PA15(JTDI)	I/O	FT	-	JTDI, TIM2_CH1/TIM2_ETR, HDMI_CEC, SPI1_NSS/I2S1_WS, SPI3_NSS/I2S3_WS, UART4_RTS, EVENTOUT	-

Table 10. STM32F446xx pin and ball descriptions (continued)

Pin Number					Pin name (function after reset)	Pin type	I/O structure	Notes	Alternate functions	Additional functions
LQFP64	LQFP100	WLCSP 81	UFBGA144	LQFP144						
51	78	D3	B11	111	PC10	I/O	FT	-	SPI3_SCK/I2S3_CK, USART3_TX, UART4_TX, QUADSPI_BK1_IO1, SDIO_D2, DCMI_D8, EVENTOUT	-
52	79	D4	B10	112	PC11	I/O	FT	-	SPI3_MISO, USART3_RX, UART4_RX, QUADSPI_BK2_NCS, SDIO_D3, DCMI_D4, EVENTOUT	-
53	80	A2	C10	113	PC12	I/O	FT	-	I2C2_SDA, SPI3_MOSI/I2S3_SD, USART3_CK, UART5_TX, SDIO_CK, DCMI_D9, EVENTOUT	-
-	81	B3	E10	114	PD0	I/O	FT	-	SPI4_MISO, SPI3_MOSI/I2S3_SD, CAN1_RX, FMC_D2, EVENTOUT	-
-	82	C4	D10	115	PD1	I/O	FT	-	SPI2_NSS/I2S2_WS, CAN1_TX, FMC_D3, EVENTOUT	-
54	83	D5	E9	116	PD2	I/O	FT	-	TIM3_ETR, UART5_RX, SDIO_CMD, DCMI_D11, EVENTOUT	-
-	84	-	D9	117	PD3	I/O	FT	-	TRACED1, SPI2_SCK/I2S2_CK, USART2_CTS, QUADSPI_CLK, FMC_CLK, DCMI_D5, EVENTOUT	-
-	85	A3	C9	118	PD4	I/O	FT	-	USART2_RTS, FMC_NOE, EVENTOUT	-
-	86	-	B9	119	PD5	I/O	FT	-	USART2_TX, FMC_NWE, EVENTOUT	-
-	-	-	E7	120	VSS	S	-	-	-	-
-	-	-	F7	121	VDD	S	-	-	-	-

Table 10. STM32F446xx pin and ball descriptions (continued)

Pin Number					Pin name (function after reset)	Pin type	I/O structure	Notes	Alternate functions	Additional functions
LQFP64	LQFP100	WLCSP 81	UFBGA144	LQFP144						
-	87	B4	A8	122	PD6	I/O	FT	-	SPI3_MOSI/I2S3_SD, SAI1_SD_A, USART2_RX, FMC_NWAIT, DCMI_D10, EVENTOUT	-
-	88	A4	A9	123	PD7	I/O	FT	-	USART2_CK, SPDIFRX_IN0, FMC_NE1, EVENTOUT	-
-	-	-	E8	124	PG9	I/O	FT	-	SPDIFRX_IN3, USART6_RX, QUADSPI_BK2_IO2, SAI2_FS_B, FMC_NE2/FMC_NCE3, DCMI_VSYNC, EVENTOUT	-
-	-	-	D8	125	PG10	I/O	FT	-	SAI2_SD_B, FMC_NE3, DCMI_D2, EVENTOUT	-
-	-	-	C8	126	PG11	I/O	FT	-	SPI4_SCK, SPDIFRX_IN0, DCMI_D3, EVENTOUT	-
-	-	-	B8	127	PG12	I/O	FT	-	SPI4_MISO, SPDIFRX_IN1, USART6_RTS, FMC_NE4, EVENTOUT	-
-	-	-	D7	128	PG13	I/O	FT	-	TRACED2, SPI4_MOSI, USART6_CTS, FMC_A24, EVENTOUT	-
-	-	-	C7	129	PG14	I/O	FT	-	TRACED3, SPI4_NSS, USART6_TX, QUADSPI_BK2_IO3, FMC_A25, EVENTOUT	-
-	-	-	-	130	VSS	S	-	-	-	-
-	-	-	F6	131	VDD	S	-	-	-	-
-	-	-	B7	132	PG15	I/O	FT	-	USART6_CTS, FMC_SDNCAS, DCMI_D13, EVENTOUT	-
55	89	A5	A7	133	PB3(JTDO/TRACESWO)	I/O	FT	-	JTDO/TRACESWO, TIM2_CH2, I2C2_SDA, SPI1_SCK/I2S1_CK, SPI3_SCK/I2S3_CK, EVENTOUT	-

Table 10. STM32F446xx pin and ball descriptions (continued)

Pin Number					Pin name (function after reset)	Pin type	I/O structure	Notes	Alternate functions	Additional functions
LQFP64	LQFP100	WLCSP 81	UFBGA144	LQFP144						
56	90	B5	A6	134	PB4(NJTRST)	I/O	FT	-	NJTRST, TIM3_CH1, I2C3_SDA, SPI1_MISO, SPI3_MISO, SPI2_NSS/I2S2_WS, EVENTOUT	-
57	91	A6	B6	135	PB5	I/O	FT	-	TIM3_CH2, I2C1_SMBA, SPI1_MOSI/I2S1_SD, SPI3_MOSI/I2S3_SD, CAN2_RX, OTG_HS_ULPI_D7, FMC_SDCKE1, DCMI_D10, EVENTOUT	-
58	92	C5	C6	136	PB6	I/O	FT	-	TIM4_CH1, HDMI_CEC, I2C1_SCL, USART1_TX, CAN2_TX, QUADSPI_BK1_NCS, FMC_SDNE1, DCMI_D5, EVENTOUT	-
59	93	B6	D6	137	PB7	I/O	FT	-	TIM4_CH2, I2C1_SDA, USART1_RX, SPDIFRX_IN0, FMC_NL, DCMI_VSYNC, EVENTOUT	-
60	94	A7	D5	138	BOOT0	I	B	-	-	VPP
61	95	C6	C5	139	PB8	I/O	FT	-	TIM2_CH1/TIM2_ETR, TIM4_CH3, TIM10_CH1, I2C1_SCL, CAN1_RX, SDIO_D4, DCMI_D6, EVENTOUT	-
62	96	C7	B5	140	PB9	I/O	FT	-	TIM2_CH2, TIM4_CH4, TIM11_CH1, I2C1_SDA, SPI2_NSS/I2S2_WS, SAI1_FS_B, CAN1_TX, SDIO_D5, DCMI_D7, EVENTOUT	-
-	97	-	A5	141	PE0	I/O	FT	-	TIM4_ETR, SAI2_MCLK_A, FMC_NBL0, DCMI_D2, EVENTOUT	-
-	98	-	A4	142	PE1	I/O	FT	-	FMC_NBL1, DCMI_D3, EVENTOUT	-

Table 10. STM32F446xx pin and ball descriptions (continued)

Pin Number					Pin name (function after reset)	Pin type	I/O structure	Notes	Alternate functions	Additional functions
LQFP64	LQFP100	WLCSP 81	UFBGA144	LQFP144						
63	99	B7	E6	-	VSS	S	-	-	-	-
-	-	B8	E5	143	PDR_ON	S	-	-	-	-
64	100	A8	F5	144	VDD	S	-	-	-	-

1. PA11, PA12, PB14 and PB15 I/Os are supplied by VDDUSB

Table 11. Alternate function

Port		AF0	AF1	AF2	AF3	AF4	AF5	AF6	AF7	AF8	AF9	AF10	AF11	AF12	AF13	AF14	AF15
		SYS	TIM1/2	TIM3/4/5	TIM8/9/10/11/CEC	I2C1/2/3/4/CEC	SPI1/2/3/4	SPI2/3/4/SAI1	SPI2/3/USART1/2/3/UART5/SPDIFRX	SAI/USART6/UART4/5/SPDIFRX	CAN1/2 TIM12/13/14/QUADSPI	SAI2/QUADSPI/OTG2_HS/OTG1_FS	OTG1_FS	FMC/SDIO/OTG2_FS	DCMI	-	SYS
Port A	PA0	-	TIM2_CH1/TIM2_ETR	TIM5_CH1	TIM8_ETR	-	-	-	USART2_CTS	UART4_TX	-	-	-	-	-	-	EVENTOUT
	PA1	-	TIM2_CH2	TIM5_CH2	-	-	-	-	USART2_RTS	UART4_RX	QUADSPI_BK1_IO3	SAI2_MCLK_B	-	-	-	-	EVENTOUT
	PA2	-	TIM2_CH3	TIM5_CH3	TIM9_CH1	-	-	-	USART2_TX	SAI2_SCK_B	-	-	-	-	-	-	EVENTOUT
	PA3	-	TIM2_CH4	TIM5_CH4	TIM9_CH2	-	-	SAI1_FS_A	USART2_RX	-	-	OTG_HS_ULPI_D0	-	-	-	-	EVENTOUT
	PA4	-	-	-	-	-	SPI1_NSS/I2S1_WS	SPI3_NSS/I2S3_WS	USART2_CK	-	-	-	-	OTG_HS_SOF	DCMI_HSYNC	-	EVENTOUT
	PA5	-	TIM2_CH1/TIM2_ETR	-	TIM8_CH1N	-	SPI1_SCK/I2S1_CK	-	-	-	-	OTG_HS_ULPI_CK	-	-	-	-	EVENTOUT
	PA6	-	TIM1_BKIN	TIM3_CH1	TIM8_BKIN	-	SPI1_MISO	I2S2_MCK	-	-	TIM13_CH1	-	-	-	DCMI_PIXCLK	-	EVENTOUT
	PA7	-	TIM1_CH1N	TIM3_CH2	TIM8_CH1N	-	SPI1_MOSI/I2S1_SD	-	-	-	TIM14_CH1	-	-	FMC_SDNWE	-	-	EVENTOUT
	PA8	MCO1	TIM1_CH1	-	-	I2C3_SCL	-	-	USART1_CK	-	-	OTG_FS_SOF	-	-	-	-	EVENTOUT
	PA9	-	TIM1_CH2	-	-	I2C3_SMBA	SPI2_SCK/I2S2_CK	SAI1_SD_B	USART1_TX	-	-	-	-	-	DCMI_D0	-	EVENTOUT
	PA10	-	TIM1_CH3	-	-	-	-	-	USART1_RX	-	-	OTG_FS_ID	-	-	DCMI_D1	-	EVENTOUT
	PA11	-	TIM1_CH4	-	-	-	-	-	USART1_CTS	-	CAN1_RX	OTG_FS_DM	-	-	-	-	EVENTOUT
	PA12	-	TIM1_ETR	-	-	-	-	-	USART1_RTS	SAI2_FS_B	CAN1_TX	OTG_FS_DP	-	-	-	-	EVENTOUT
	PA13	JTMS-SWDIO	-	-	-	-	-	-	-	-	-	-	-	-	-	-	EVENTOUT
	PA14	JTCK-SWCLK	-	-	-	-	-	-	-	-	-	-	-	-	-	-	EVENTOUT
	PA15	JTDI	TIM2_CH1/TIM2_ETR	-	-	HDMI_CEC	SPI1_NSS/I2S1_WS	SPI3_NSS/I2S3_WS	-	UART4_RTS	-	-	-	-	-	-	EVENTOUT

Table 11. Alternate function (continued)

Port		AF0	AF1	AF2	AF3	AF4	AF5	AF6	AF7	AF8	AF9	AF10	AF11	AF12	AF13	AF14	AF15
		SYS	TIM1/2	TIM3/4/5	TIM8/9/10/11/CEC	I2C1/2/3/4/CEC	SPI1/2/3/4	SPI2/3/4/SAI1	SPI2/3/USART1/2/3/UART5/SPDIFRX	SAI/USART6/UART4/5/SPDIFRX	CAN1/2 TIM12/13/14/QUADSPI	SAI2/QUADSPI/OTG2_HS/OTG1_FS	OTG1_FS	FMC/SDIO/OTG2_FS	DCMI	-	SYS
Port B	PB0	-	TIM1_CH2N	TIM3_CH3	TIM8_CH2N	-	-	-	SPI3_MOSI/I2S3_SD	UART4_CTS	-	OTG_HS_ULPI_D1	-	SDIO_D1	-	-	EVENT OUT
	PB1	-	TIM1_CH3N	TIM3_CH4	TIM8_CH3N	-	-	-	-	-	-	OTG_HS_ULPI_D2	-	SDIO_D2	-	-	EVENT OUT
	PB2	-	TIM2_CH4	-	-	-	-	SAI1_SD_A	SPI3_MOSI/I2S3_SD	-	QUADSPI_CLK	OTG_HS_ULPI_D4	-	SDIO_CK	-	-	EVENT OUT
	PB3	JTDO/TRACESWO	TIM2_CH2	-	-	I2C2_SDA	SPI1_SCK/I2S1_CK	SPI3_SCK/I2S3_CK	-	-	-	-	-	-	-	-	EVENT OUT
	PB4	NJTRST	-	TIM3_CH1	-	I2C3_SDA	SPI1_MISO	SPI3_MISO	SPI2_NSS/I2S2_WS	-	-	-	-	-	-	-	EVENT OUT
	PB5	-	-	TIM3_CH2	-	I2C1_SMBA	SPI1_MOSI/I2S1_SD	SPI3_MOSI/I2S3_SD	-	-	CAN2_RX	OTG_HS_ULPI_D7	-	FMC_SDCKE1	DCMI_D10	-	EVENT OUT
	PB6	-	-	TIM4_CH1	HDMI_CEC	I2C1_SCL	-	-	USART1_TX	-	CAN2_TX	QUADSPI_BK1_NCS	-	FMC_SDNE1	DCMI_D5	-	EVENT OUT
	PB7	-	-	TIM4_CH2	-	I2C1_SDA	-	-	USART1_RX	SPDIF_RX0	-	-	-	FMC_NL	DCMI_VSYNC	-	EVENT OUT
	PB8	-	TIM2_CH1/TIM2_ETR	TIM4_CH3	TIM10_CH1	I2C1_SCL	-	-	-	-	CAN1_RX	-	-	SDIO_D4	DCMI_D6	-	EVENT OUT
	PB9	-	TIM2_CH2	TIM4_CH4	TIM11_CH1	I2C1_SDA	SPI2_NSS/I2S2_WS	SAI1_FS_B	-	-	CAN1_TX	-	-	SDIO_D5	DCMI_D7	-	EVENT OUT
	PB10	-	TIM2_CH3	-	-	I2C2_SCL	SPI2_SCK/I2S2_CK	SAI1_SCK_A	USART3_TX	-	-	OTG_HS_ULPI_D3	-	-	-	-	EVENT OUT
	PB11	-	TIM2_CH4	-	-	I2C2_SDA	-	-	USART3_RX	SAI2_SD_A	-	-	-	-	-	-	EVENT OUT
	PB12	-	TIM1_BKIN	-	-	I2C2_SMBA	SPI2_NSS/I2S2_WS	SAI1_SCK_B	USART3_CK	-	CAN2_RX	OTG_HS_ULPI_D5	-	OTG_HS_ID	-	-	EVENT OUT
	PB13	-	TIM1_CH1N	-	-	-	SPI2_SCK/I2S2_CK	-	USART3_CTS	-	CAN2_TX	OTG_HS_ULPI_D6	-	-	-	-	EVENT OUT
	PB14	-	TIM1_CH2N	-	TIM8_CH2N	-	SPI2_MISO	-	USART3_RTS	-	TIM12_CH1	-	-	OTG_HS_DM	-	-	EVENT OUT
	PB15	RTC_REFIN	TIM1_CH3N	-	TIM8_CH3N	-	SPI2_MOSI/I2S2_SD	-	-	-	TIM12_CH2	-	-	OTG_HS_DP	-	-	EVENT OUT

Table 11. Alternate function (continued)

Port		AF0	AF1	AF2	AF3	AF4	AF5	AF6	AF7	AF8	AF9	AF10	AF11	AF12	AF13	AF14	AF15
		SYS	TIM1/2	TIM3/4/5	TIM8/9/10/11/CEC	I2C1/2/3/4/CEC	SPI1/2/3/4	SPI2/3/4/SAI1	SPI2/3/USART1/2/3/UART5/SPDIFRX	SAI/USART6/UART4/5/SPDIFRX	CAN1/2 TIM12/13/14/QUADSPI	SAI2/QUADSPI/OTG2_HS/OTG1_FS	OTG1_FS	FMC/SDIO/OTG2_FS	DCMI	-	SYS
Port C	PC0	-	-	-	-	-	-	SAI1_MCLK_B	-	-	-	OTG_HS_ULPI_STP	-	FMC_SDNWE	-	-	EVENT OUT
	PC1	-	-	-	-	-	SPI3_MOSI/I2S3_SD	SAI1_SD_A	SPI2_MOSI/I2S2_SD	-	-	-	-	-	-	-	EVENT OUT
	PC2	-	-	-	-	-	SPI2_MISO	-	-	-	-	OTG_HS_ULPI_DIR	-	FMC_SDNE0	-	-	EVENT OUT
	PC3	-	-	-	-	-	SPI2_MOSI/I2S2_SD	-	-	-	-	OTG_HS_ULPI_NXT	-	FMC_SDCKE0	-	-	EVENT OUT
	PC4	-	-	-	-	-	I2S1_MCK	-	-	SPDIF_RX2	-	-	-	FMC_SDNE0	-	-	EVENT OUT
	PC5	-	-	-	-	-	-	-	USART3_RX	SPDIF_RX3	-	-	-	FMC_SDCKE0	-	-	EVENT OUT
	PC6	-	-	TIM3_CH1	TIM8_CH1	FMPI2C1_SCL	I2S2_MCK	-	-	USART6_TX	-	-	-	SDIO_D6	DCMI_D0	-	EVENT OUT
	PC7	-	-	TIM3_CH2	TIM8_CH2	FMPI2C1_SDA	SPI2_SCK/I2S2_CK	I2S3_MCK	SPDIF_RX1	USART6_RX	-	-	-	SDIO_D7	DCMI_D1	-	EVENT OUT
	PC8	TRACE D0	-	TIM3_CH3	TIM8_CH3	-	-	-	UART5_RTS	USART6_CK	-	-	-	SDIO_D0	DCMI_D2	-	EVENT OUT
	PC9	MCO2	-	TIM3_CH4	TIM8_CH4	I2C3_SDA	I2S_CKIN	-	UART5_CTS	-	QUADSPI_BK1_IO0	-	-	SDIO_D1	DCMI_D3	-	EVENT OUT
	PC10	-	-	-	-	-	-	SPI3_SCK/I2S3_CK	USART3_TX	UART4_TX	QUADSPI_BK1_IO1	-	-	SDIO_D2	DCMI_D8	-	EVENT OUT
	PC11	-	-	-	-	-	-	SPI3_MISO	USART3_RX	UART4_RX	QUADSPI_BK2_NCS	-	-	SDIO_D3	DCMI_D4	-	EVENT OUT
	PC12	-	-	-	-	I2C2_SDA	-	SPI3_MOSI/I2S3_SD	USART3_CK	UART5_TX	-	-	-	SDIO_CK	DCMI_D9	-	EVENT OUT
	PC13	-	-	-	-	-	-	-	-	-	-	-	-	-	-	-	EVENT OUT
	PC14	-	-	-	-	-	-	-	-	-	-	-	-	-	-	-	EVENT OUT
	PC15	-	-	-	-	-	-	-	-	-	-	-	-	-	-	-	EVENT OUT

Table 11. Alternate function (continued)

Port		AF0	AF1	AF2	AF3	AF4	AF5	AF6	AF7	AF8	AF9	AF10	AF11	AF12	AF13	AF14	AF15
		SYS	TIM1/2	TIM3/4/5	TIM8/9/10/11/CEC	I2C1/2/3/4/CEC	SPI1/2/3/4	SPI2/3/4/SAI1	SPI2/3/USART1/2/3/UART5/SPDIFRX	SAI/USART6/UART4/5/SPDIFRX	CAN1/2 TIM12/13/14/QUADSPI	SAI2/QUADSPI/OTG2_HS/OTG1_FS	OTG1_FS	FMC/SDIO/OTG2_FS	DCMI	-	SYS
Port D	PD0	-	-	-	-	-	SPI4_MISO	SPI3_MOSI/I2S3_SD	-	-	CAN1_RX	-	-	FMC_D2	-	-	EVENT OUT
	PD1	-	-	-	-	-	-	-	SPI2_NSS/I2S2_WS	-	CAN1_TX	-	-	FMC_D3	-	-	EVENT OUT
	PD2	-	-	TIM3_ETR	-	-	-	-	-	UART5_RX	-	-	-	SDIO_CMD	DCMI_D11	-	EVENT OUT
	PD3	TRACE D1	-	-	-	-	SPI2_SCK/I2S2_CK	-	USART2_CTS	-	QUADSPI_CLK	-	-	FMC_CLK	DCMI_D5	-	EVENT OUT
	PD4	-	-	-	-	-	-	-	USART2_RTS	-	-	-	-	FMC_NOE	-	-	EVENT OUT
	PD5	-	-	-	-	-	-	-	USART2_TX	-	-	-	-	FMC_NWE	-	-	EVENT OUT
	PD6	-	-	-	-	-	SPI3_MOSI/I2S3_SD	SAI1_SD_A	USART2_RX	-	-	-	-	FMC_NWAIT	DCMI_D10	-	EVENT OUT
	PD7	-	-	-	-	-	-	-	USART2_CK	SPDIF_RX0	-	-	-	FMC_NE1	-	-	EVENT OUT
	PD8	-	-	-	-	-	-	-	USART3_TX	SPDIF_RX1	-	-	-	FMC_D13	-	-	EVENT OUT
	PD9	-	-	-	-	-	-	-	USART3_RX	-	-	-	-	FMC_D14	-	-	EVENT OUT
	PD10	-	-	-	-	-	-	-	USART3_CK	-	-	-	-	FMC_D15	-	-	EVENT OUT
	PD11	-	-	-	-	FMPI2C1_SMBA	-	-	USART3_CTS	-	QUADSPI_BK1_IO0	SAI2_SD_A	-	FMC_A16	-	-	EVENT OUT
	PD12	-	-	TIM4_CH1	-	FMPI2C1_SCL	-	-	USART3_RTS	-	QUADSPI_BK1_IO1	SAI2_FS_A	-	FMC_A17	-	-	EVENT OUT
	PD13	-	-	TIM4_CH2	-	FMPI2C1_SDA	-	-	-	-	QUADSPI_BK1_IO3	SAI2_SCK_A	-	FMC_A18	-	-	EVENT OUT
	PD14	-	-	TIM4_CH3	-	FMPI2C1_SCL	-	-	-	SAI2_SCK_A	-	-	-	FMC_D0	-	-	EVENT OUT
	PD15	-	-	TIM4_CH4	-	FMPI2C1_SDA	-	-	-	-	-	-	-	FMC_D1	-	-	EVENT OUT

Table 11. Alternate function (continued)

Port		AF0	AF1	AF2	AF3	AF4	AF5	AF6	AF7	AF8	AF9	AF10	AF11	AF12	AF13	AF14	AF15
		SYS	TIM1/2	TIM3/4/5	TIM8/9/10/11/CEC	I2C1/2/3/4/CEC	SPI1/2/3/4	SPI2/3/4/SAI1	SPI2/3/USART1/2/3/UART5/SPDIFRX	SAI/USART6/UART4/5/SPDIFRX	CAN1/2 TIM12/13/14/QUADSPI	SAI2/QUADSPI/OTG2_HS/OTG1_FS	OTG1_FS	FMC/SDIO/OTG2_FS	DCMI	-	SYS
Port E	PE0	-	-	TIM4_ETR	-	-	-	-	-	-	-	SAI2_MCLK_A	-	FMC_NBL0	DCMI_D2	-	EVENT OUT
	PE1	-	-	-	-	-	-	-	-	-	-	-	-	FMC_NBL1	DCMI_D3	-	EVENT OUT
	PE2	TRACE CLK	-	-	-	-	SPI4_SCK	SAI1_MCLK_A	-	-	QUADSPI_BK1_IO2	-	-	FMC_A23	-	-	EVENT OUT
	PE3	TRACE D0	-	-	-	-	-	SAI1_SD_B	-	-	-	-	-	FMC_A19	-	-	EVENT OUT
	PE4	TRACE D1	-	-	-	-	SPI4_NSS	SAI1_FS_A	-	-	-	-	-	FMC_A20	DCMI_D4	-	EVENT OUT
	PE5	TRACE D2	-	-	TIM9_CH1	-	SPI4_MISO	SAI1_SCK_A	-	-	-	-	-	FMC_A21	DCMI_D6	-	EVENT OUT
	PE6	TRACE D3	-	-	TIM9_CH2	-	SPI4_MOSI	SAI1_SD_A	-	-	-	-	-	FMC_A22	DCMI_D7	-	EVENT OUT
	PE7	-	TIM1_ETR	-	-	-	-	-	-	UART5_RX	-	QUADSPI_BK2_IO0	-	FMC_D4	-	-	EVENT OUT
	PE8	-	TIM1_CH1N	-	-	-	-	-	-	UART5_TX	-	QUADSPI_BK2_IO1	-	FMC_D5	-	-	EVENT OUT
	PE9	-	TIM1_CH1	-	-	-	-	-	-	-	-	QUADSPI_BK2_IO2	-	FMC_D6	-	-	EVENT OUT
	PE10	-	TIM1_CH2N	-	-	-	-	-	-	-	-	QUADSPI_BK2_IO3	-	FMC_D7	-	-	EVENT OUT
	PE11	-	TIM1_CH2	-	-	-	SPI4_NSS	-	-	-	-	SAI2_SD_B	-	FMC_D8	-	-	EVENT OUT
	PE12	-	TIM1_CH3N	-	-	-	SPI4_SCK	-	-	-	-	SAI2_SCK_B	-	FMC_D9	-	-	EVENT OUT
	PE13	-	TIM1_CH3	-	-	-	SPI4_MISO	-	-	-	-	SAI2_FS_B	-	FMC_D10	-	-	EVENT OUT
	PE14	-	TIM1_CH4	-	-	-	SPI4_MOSI	-	-	-	-	SAI2_MCLK_B	-	FMC_D11	-	-	EVENT OUT
	PE15	-	TIM1_BKIN	-	-	-	-	-	-	-	-	-	-	FMC_D12	-	-	EVENT OUT

Table 11. Alternate function (continued)

Port		AF0	AF1	AF2	AF3	AF4	AF5	AF6	AF7	AF8	AF9	AF10	AF11	AF12	AF13	AF14	AF15
		SYS	TIM1/2	TIM3/4/5	TIM8/9/10/11/CEC	I2C1/2/3/4/CEC	SPI1/2/3/4	SPI2/3/4/SAI1	SPI2/3/USART1/2/3/UART5/SPDIFRX	SAI/USART6/UART4/5/SPDIFRX	CAN1/2 TIM12/13/14/QUADSPI	SAI2/QUADSPI/OTG2_HS/OTG1_FS	OTG1_FS	FMC/SDIO/OTG2_FS	DCMI	-	SYS
Port F	PF0	-	-	-	-	I2C2_SDA	-	-	-	-	-	-	-	FMC_A0	-	-	EVENT OUT
	PF1	-	-	-	-	I2C2_SCL	-	-	-	-	-	-	-	FMC_A1	-	-	EVENT OUT
	PF2	-	-	-	-	I2C2_SMBA	-	-	-	-	-	-	-	FMC_A2	-	-	EVENT OUT
	PF3	-	-	-	-	-	-	-	-	-	-	-	-	FMC_A3	-	-	EVENT OUT
	PF4	-	-	-	-	-	-	-	-	-	-	-	-	FMC_A4	-	-	EVENT OUT
	PF5	-	-	-	-	-	-	-	-	-	-	-	-	FMC_A5	-	-	EVENT OUT
	PF6	-	-	-	TIM10_CH1	-	-	SAI1_SD_B	-	-	QUADSPI_BK1_IO3	-	-	-	-	-	EVENT OUT
	PF7	-	-	-	TIM11_CH1	-	-	SAI1_MCLK_B	-	-	QUADSPI_BK1_IO2	-	-	-	-	-	EVENT OUT
	PF8	-	-	-	-	-	-	SAI1_SCK_B	-	-	TIM13_CH1	QUADSPI_BK1_IO0	-	-	-	-	EVENT OUT
	PF9	-	-	-	-	-	-	SAI1_FS_B	-	-	TIM14_CH1	QUADSPI_BK1_IO1	-	-	-	-	EVENT OUT
	PF10	-	-	-	-	-	-	-	-	-	-	-	-	-	DCMI_D11	-	EVENT OUT
	PF11	-	-	-	-	-	-	-	-	-	-	SAI2_SD_B	-	FMC_SDNRAS	DCMI_D12	-	EVENT OUT
	PF12	-	-	-	-	-	-	-	-	-	-	-	-	FMC_A6	-	-	EVENT OUT
	PF13	-	-	-	-	FMPI2C1_SMBA	-	-	-	-	-	-	-	FMC_A7	-	-	EVENT OUT
	PF14	-	-	-	-	FMPI2C1_SCL	-	-	-	-	-	-	-	FMC_A8	-	-	EVENT OUT
	PF15	-	-	-	-	FMPI2C1_SDA	-	-	-	-	-	-	-	FMC_A9	-	-	EVENT OUT

Table 11. Alternate function (continued)

Port		AF0	AF1	AF2	AF3	AF4	AF5	AF6	AF7	AF8	AF9	AF10	AF11	AF12	AF13	AF14	AF15
		SYS	TIM1/2	TIM3/4/5	TIM8/9/10/11/CEC	I2C1/2/3/4/CEC	SPI1/2/3/4	SPI2/3/4/SAI1	SPI2/3/USART1/2/3/UART5/SPDIFRX	SAI/USART6/UART4/5/SPDIFRX	CAN1/2 TIM12/13/14/QUADSPI	SAI2/QUADSPI/OTG2_HS/OTG1_FS	OTG1_FS	FMC/SDIO/OTG2_FS	DCMI	-	SYS
Port G	PG0	-	-	-	-	-	-	-	-	-	-	-	-	FMC_A10	-	-	EVENT OUT
	PG1	-	-	-	-	-	-	-	-	-	-	-	-	FMC_A11	-	-	EVENT OUT
	PG2	-	-	-	-	-	-	-	-	-	-	-	-	FMC_A12	-	-	EVENT OUT
	PG3	-	-	-	-	-	-	-	-	-	-	-	-	FMC_A13	-	-	EVENT OUT
	PG4	-	-	-	-	-	-	-	-	-	-	-	-	FMC_A14/FMC_BA0	-	-	EVENT OUT
	PG5	-	-	-	-	-	-	-	-	-	-	-	-	FMC_A15/FMC_BA1	-	-	EVENT OUT
	PG6	-	-	-	-	-	-	-	-	-	-	QUADSPI_BK1_NCS	-	-	DCMI_D12	-	EVENT OUT
	PG7	-	-	-	-	-	-	-	-	USART6_CK	-	-	-	FMC_INT	DCMI_D13	-	EVENT OUT
	PG8	-	-	-	-	-	-	-	SPDIFRX_IN2	USART6_RTS	-	-	-	FMC_SDCLK	-	-	EVENT OUT
	PG9	-	-	-	-	-	-	-	SPDIFRX_IN3	USART6_RX	QUADSPI_BK2_IO2	SAI2_FS_B	-	FMC_NE2/FMC_NCE3	DCMI_VSYNC(1)	-	EVENT OUT
	PG10	-	-	-	-	-	-	-	-	-	-	SAI2_SD_B	-	FMC_NE3	DCMI_D2	-	EVENT OUT
	PG11	-	-	-	-	-	-	SPI4_SCK	SPDIFRX_IN0	-	-	-	-	-	DCMI_D3	-	EVENT OUT
	PG12	-	-	-	-	-	-	SPI4_MISO	SPDIFRX_IN1	USART6_RTS	-	-	-	FMC_NE4	-	-	EVENT OUT
	PG13	TRACE D2	-	-	-	-	-	SPI4_MOSI	-	USART6_CTS	-	-	-	FMC_A24	-	-	EVENT OUT
	PG14	TRACE D3	-	-	-	-	-	SPI4_NSS	-	USART6_TX	QUADSPI_BK2_IO3	-	-	FMC_A25	-	-	EVENT OUT
	PG15	-	-	-	-	-	-	-	-	USART6_CTS	-	-	-	FMC_SDNCAS	DCMI_D13	-	EVENT OUT

Table 11. Alternate function (continued)

Port		AF0	AF1	AF2	AF3	AF4	AF5	AF6	AF7	AF8	AF9	AF10	AF11	AF12	AF13	AF14	AF15
		SYS	TIM1/2	TIM3/4/5	TIM8/9/10/11/CEC	I2C1/2/3/4/CEC	SPI1/2/3/4	SPI2/3/4/SAI1	SPI2/3/USART1/2/3/UART5/SPDIFRX	SAI/USART6/UART4/5/SPDIFRX	CAN1/2 TIM12/13/14/QUADSPI	SAI2/QUADSPI/OTG2_HS/OTG1_FS	OTG1_FS	FMC/SDIO/OTG2_FS	DCMI	-	SYS
Port H	PH0	-	-	-	-	-	-	-	-	-	-	-	-	-	-	-	EVENT OUT
	PH1	-	-	-	-	-	-	-	-	-	-	-	-	-	-	-	EVENT OUT

1. The DCMI_VSYNC alternate function on PG9 is only available on silicon revision 3.

5 Memory mapping

The memory map is shown in *Figure 15*

Figure 15. Memory map

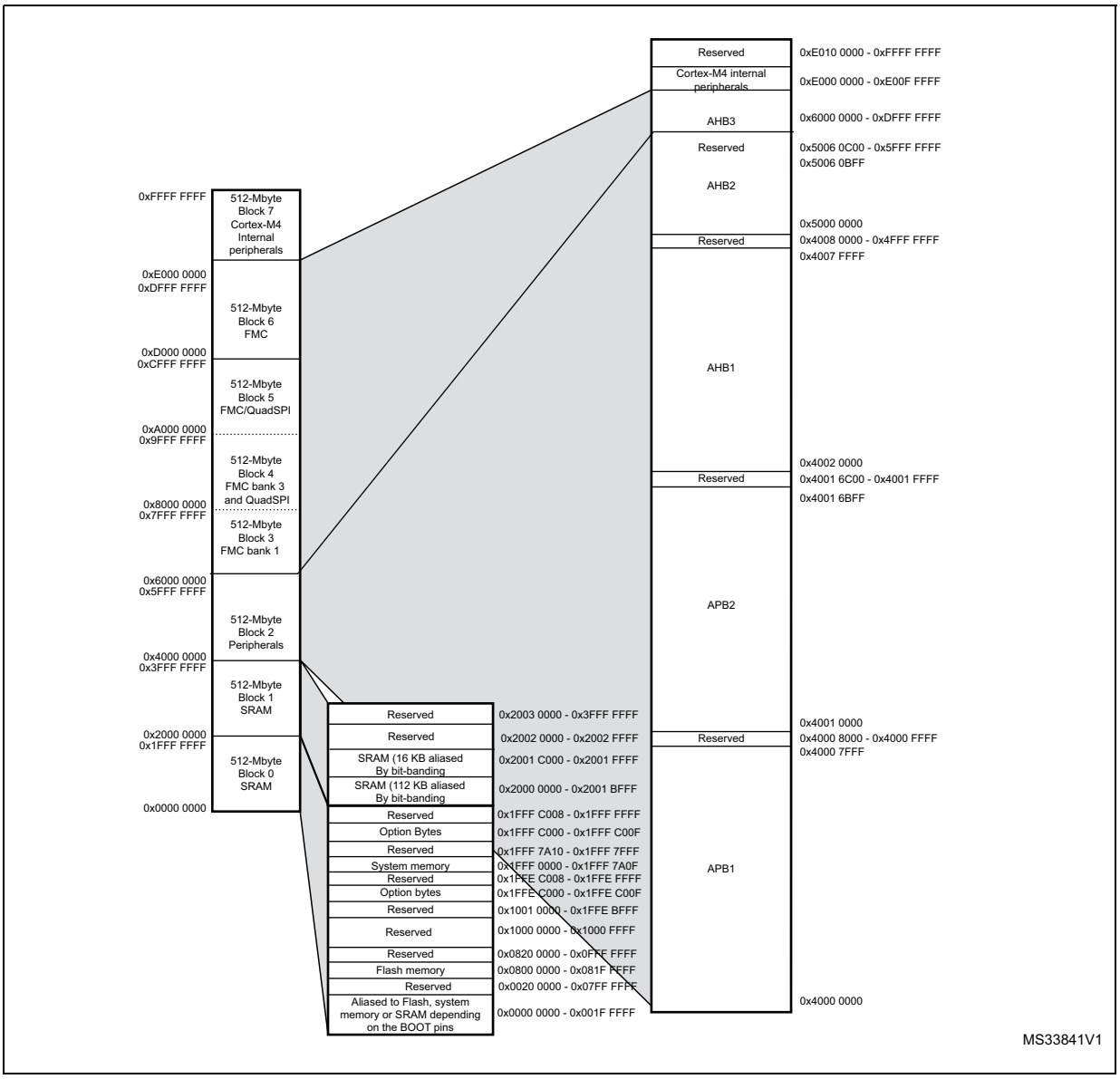

Table 12. STM32F446xC/E register boundary addresses(1)

Bus	Boundary address	Peripheral
-	0xE00F FFFF - 0xFFFF FFFF	Reserved
Cortex-M4	0xE000 0000 - 0xE00F FFFF	Cortex-M4 internal peripherals
AHB3	0xD000 0000 - 0xDFFF FFFF	FMC bank 6
	0xC000 0000 - 0xCFFF FFFF	FMC bank 5
	0xA000 2000 - 0x0xBFFF FFFF	Reserved
	0xA000 1000 - 0x0xA000 1FFF	QuadSPI control register
	0xA000 0000 - 0xA000 0FFF	FMC control register
	0x9000 0000 - 0x9FFF FFFF	QuadSPI
	0x8000 0000 - 0x8FFF FFFF	FMC bank 3
	0x7000 0000 - 0x0x7FFF FFFF	Reserved
	0x6000 0000 - 0x6FFF FFFF	FMC bank 1
-	0x5006 0C00- 0x5FFF FFFF	Reserved
AHB2	0x5006 0800- 0x500F 07FF	Reserved
	0x5005 0400 - 0x5006 07FF	Reserved
	0x5005 0000 - 0x5005 03FF	DCMI
	0x5004 0000- 0x5004 FFFF	Reserved
	0x5000 0000 - 0X5003 FFFF	USB OTG FS

Table 12. STM32F446xC/E register boundary addresses(1) (continued)

Bus	Boundary address	Peripheral
-	0x4008 0000- 0x4FFF FFFF	Reserved
AHB1	0x4004 0000 - 0x4007 FFFF	USB OTG HS
	0x4002 BC00- 0x4003 FFFF	Reserved
	0x4002 B000 - 0x4002 BBFF	
	0x4002 9400 - 0x4002 AFFF	
	0x4002 9000 - 0x4002 93FF	
	0x4002 8C00 - 0x4002 8FFF	
	0x4002 8800 - 0x4002 8BFF	
	0x4002 8400 - 0x4002 87FF	
	0x4002 8000 - 0x4002 83FF	
	0x4002 6800 - 0x4002 7FFF	
	0x4002 6400 - 0x4002 67FF	DMA2
	0x4002 6000 - 0x4002 63FF	DMA1
	0X4002 5000 - 0X4002 5FFF	Reserved
	0x4002 4000 - 0x4002 4FFF	BKPSRAM
	0x4002 3C00 - 0x4002 3FFF	Flash interface register
	0x4002 3800 - 0x4002 3BFF	RCC
	0X4002 3400 - 0X4002 37FF	Reserved
	0x4002 3000 - 0x4002 33FF	CRC
	0x4002 2C00 - 0x4002 2FFF	Reserved
	0x4002 2800 - 0x4002 2BFF	
	0x4002 2400 - 0x4002 27FF	
	0x4002 2000 - 0x4002 23FF	
	0x4002 1C00 - 0x4002 1FFF	GPIOH
	0x4002 1800 - 0x4002 1BFF	GPIOG
	0x4002 1400 - 0x4002 17FF	GPIOF
	0x4002 1000 - 0x4002 13FF	GPIOE
	0X4002 0C00 - 0x4002 0FFF	GPIOD
	0x4002 0800 - 0x4002 0BFF	GPIOC
	0x4002 0400 - 0x4002 07FF	GPIOB
	0x4002 0000 - 0x4002 03FF	GPIOA

Table 12. STM32F446xC/E register boundary addresses(1) (continued)

Bus	Boundary address	Peripheral
-	0x4001 6C00- 0x4001 FFFF	Reserved
APB2	0x4001 6800 - 0x4001 6BFF	
	0x4001 5C00 - 0x4001 5FFF	SAI2
	0x4001 6000 - 0x4001 67FF	Reserved
	0x4001 5800 - 0x4001 5BFF	SAI1
	0x4001 5400 - 0x4001 57FF	Reserved
	0x4001 5000 - 0x4001 53FF	
	0x4001 4C00 - 0x4001 4FFF	
	0x4001 4800 - 0x4001 4BFF	TIM11
	0x4001 4400 - 0x4001 47FF	TIM10
	0x4001 4000 - 0x4001 43FF	TIM9
	0x4001 3C00 - 0x4001 3FFF	EXTI
	0x4001 3800 - 0x4001 3BFF	SYSCFG
	0x4001 3400 - 0x4001 37FF	SPI4
	0x4001 3000 - 0x4001 33FF	SPI1
	0x4001 2C00 - 0x4001 2FFF	SDIO
	0x4001 2400 - 0x4001 2BFF	Reserved
	0x4001 2000 - 0x4001 23FF	ADC1 - ADC2 - ADC3
	0x4001 1800 - 0x4001 1FFF	Reserved
	0x4001 1400 - 0x4001 17FF	USART6
	0x4001 1000 - 0x4001 13FF	USART1
	0x4001 0800 - 0x4001 0FFF	Reserved
	0x4001 0400 - 0x4001 07FF	TIM8
	0x4001 0000 - 0x4001 03FF	TIM1

Table 12. STM32F446xC/E register boundary addresses(1) (continued)

Bus	Boundary address	Peripheral
-	0x4000 8000- 0x4000 FFFF	Reserved
APB1	0x4000 7C00 - 0x4000 7FFF	
	0x4000 7800 - 0x4000 7BFF	
	0x4000 7400 - 0x4000 77FF	DAC
	0x4000 7000 - 0x4000 73FF	PWR
	0x4000 6C00 - 0x4000 6FFF	HDMI-CEC
	0x4000 6800 - 0x4000 6BFF	CAN2
	0x4000 6400 - 0x4000 67FF	CAN1
	0x4000 6000 - 0x4000 63FF	FMPI2C1
	0x4000 5C00 - 0x4000 5FFF	I2C3
	0x4000 5800 - 0x4000 5BFF	I2C2
	0x4000 5400 - 0x4000 57FF	I2C1
	0x4000 5000 - 0x4000 53FF	UART5
	0x4000 4C00 - 0x4000 4FFF	UART4
	0x4000 4800 - 0x4000 4BFF	USART3
	0x4000 4400 - 0x4000 47FF	USART2
	0x4000 4000 - 0x4000 43FF	SPDIFRX
	0x4000 3C00 - 0x4000 3FFF	SPI3 / I2S3
	0x4000 3800 - 0x4000 3BFF	SPI2 / I2S2
	0x4000 3400 - 0x4000 37FF	Reserved
	0x4000 3000 - 0x4000 33FF	IWDG
	0x4000 2C00 - 0x4000 2FFF	WWDG
	0x4000 2800 - 0x4000 2BFF	RTC & BKP Registers
	0x4000 2400 - 0x4000 27FF	Reserved
	0x4000 2000 - 0x4000 23FF	TIM14
	0x4000 1C00 - 0x4000 1FFF	TIM13
	0x4000 1800 - 0x4000 1BFF	TIM12
	0x4000 1400 - 0x4000 17FF	TIM7
	0x4000 1000 - 0x4000 13FF	TIM6
	0x4000 0C00 - 0x4000 0FFF	TIM5
	0x4000 0800 - 0x4000 0BFF	TIM4
	0x4000 0400 - 0x4000 07FF	TIM3
	0x4000 0000 - 0x4000 03FF	TIM2

1. The grey color is used for reserved boundary addresses.

6 Electrical characteristics

6.1 Parameter conditions

Unless otherwise specified, all voltages are referenced to V_{SS}.

6.1.1 Minimum and maximum values

Unless otherwise specified the minimum and maximum values are guaranteed in the worst conditions of ambient temperature, supply voltage and frequencies by tests in production on 100% of the devices with an ambient temperature at T_A = 25 °C and T_A = $T_A$max (given by the selected temperature range).

Data based on characterization results, design simulation and/or technology characteristics are indicated in the table footnotes and are not tested in production. Based on characterization, the minimum and maximum values refer to sample tests and represent the mean value plus or minus three times the standard deviation (mean±3σ).

6.1.2 Typical values

Unless otherwise specified, typical data are based on T_A = 25 °C, V_{DD} = 3.3 V (for the 1.7 V ≤ V_{DD} ≤ 3.6 V voltage range). They are given only as design guidelines and are not tested.

Typical ADC accuracy values are determined by characterization of a batch of samples from a standard diffusion lot over the full temperature range, where 95% of the devices have an error less than or equal to the value indicated (mean±2σ).

6.1.3 Typical curves

Unless otherwise specified, all typical curves are given only as design guidelines and are not tested.

6.1.4 Loading capacitor

The loading conditions used for pin parameter measurement are shown in *Figure 16*.

6.1.5 Pin input voltage

The input voltage measurement on a pin of the device is described in *Figure 17*.

Figure 16. Pin loading conditions

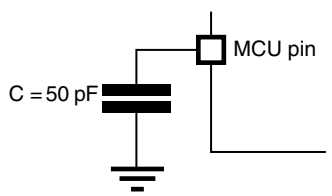

Figure 17. Pin input voltage

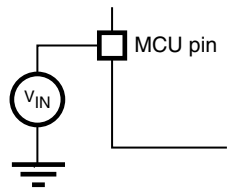

6.1.6 Power supply scheme

Figure 18. Power supply scheme

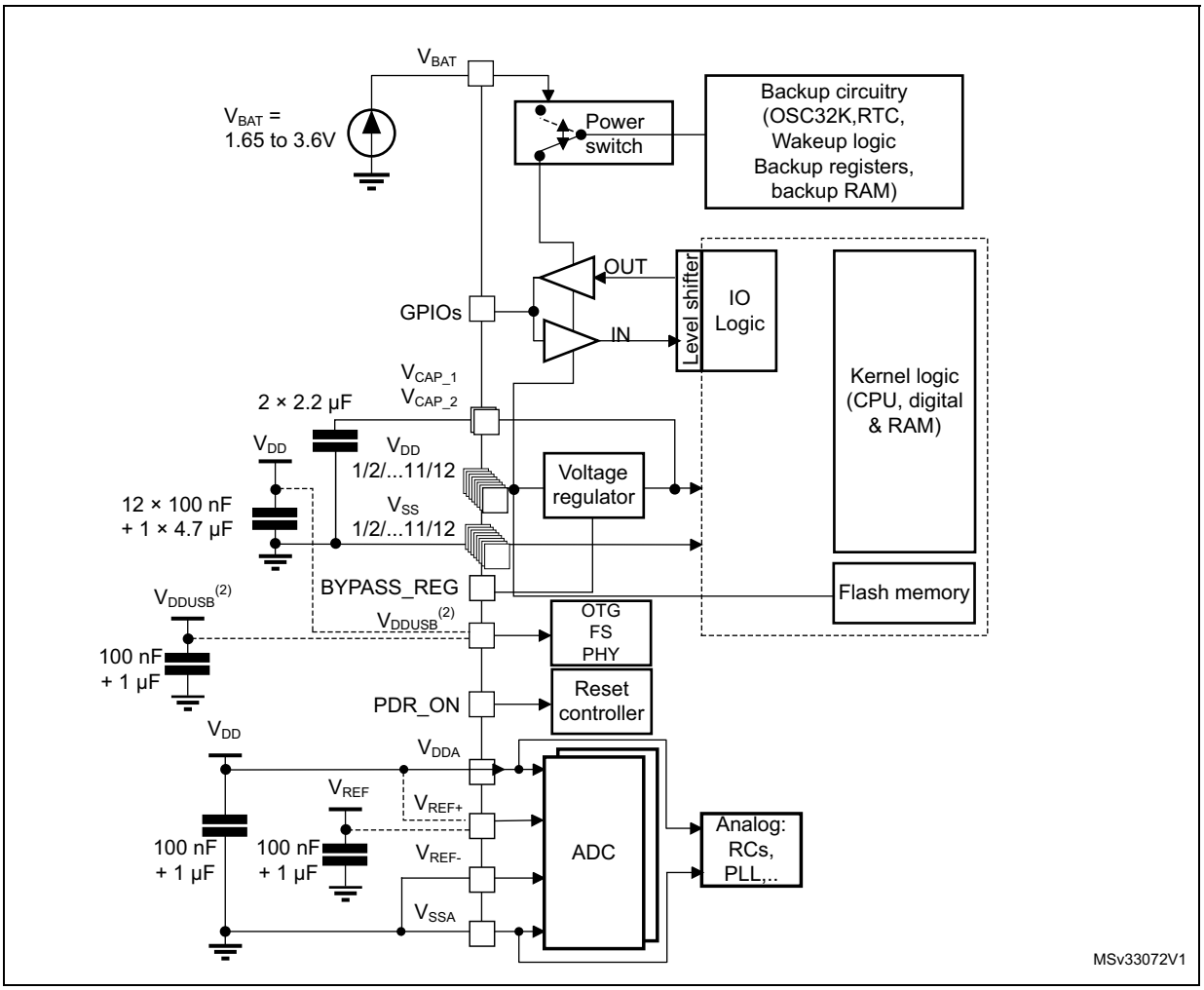

1. V_{DDA} and V_{SSA} must be connected to $V_{DD}$and V_{SS}, respectively.
2. V_{DDUSB} is a dedicated independent USB power supply for the on-chip full-speed OTG PHY module and associated DP/DM GPIOs. Its value is independent from the V_{DD} and V_{DDA} values, but must be the last supply to be provided and the first to disappear. If V_{DD} is different from V_{DDUSB} and only one on-chip OTG PHY is used, the second OTG PHY GPIOs (DP/DM) are still supplied at $_{VDDUSB}$ (3.3V).
3. V_{DDUSB} is available only on WLCSP81, UFBGA144 and LQFP144 packages. For packages where V_{DDUSB} pin is not available, it is internally connected to V_{DD}.
4. V_{CAP_2} pad is not available on LQFP64.

Caution: Each power supply pair (V_{DD}/V_{SS}, V_{DDA}/V_{SSA}...) must be decoupled with filtering ceramic capacitors as shown above. These capacitors must be placed as close as possible to, or below, the appropriate pins on the underside of the PCB to ensure good operation of the device. It is not recommended to remove filtering capacitors to reduce PCB size or cost. This might cause incorrect operation of the device.

6.1.7 Current consumption measurement

Figure 19. Current consumption measurement scheme

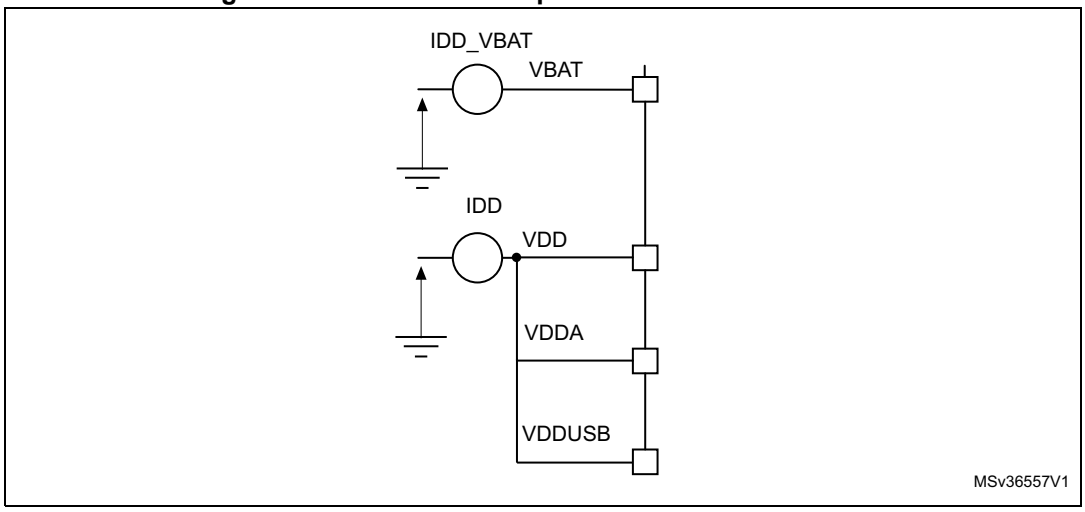

6.2 Absolute maximum ratings

Stresses above the absolute maximum ratings listed in *Table 13: Voltage characteristics*, *Table 14: Current characteristics*, and *Table 15: Thermal characteristics* may cause permanent damage to the device. These are stress ratings only and functional operation of the device at these conditions is not implied. Exposure to maximum rating conditions for extended periods may affect device reliability.

Table 13. Voltage characteristics

Symbol	Ratings	Min	Max	Unit
$V_{DD}–V_{SS}$	External main supply voltage (including V_{DDA}, V_{DD}, V_{DDUSB} and V_{BAT})(1)	–0.3	4.0	V
V_{IN}	Input voltage on FT & FTf pins(2)	V_{SS}–0.3	V_{DD}+4.0	
	Input voltage on TTa pins	V_{SS}–0.3	4.0	
	Input voltage on any other pin	V_{SS}–0.3	4.0	
	Input voltage on BOOT0 pin	V_{SS}	9.0	
$\|\Delta V_{DDx}\|$	Variations between different V_{DD} power pins	-	50	mV
$\|V_{SSX} - V_{SS}\|$	Variations between all the different ground pins	-	50	
$V_{ESD(HBM)}$	Electrostatic discharge voltage (human body model)	see *Section 6.3.15: Absolute maximum ratings (electrical sensitivity)*		-

1. All main power (V_{DD}, V_{DDA}) and ground (V_{SS}, V_{SSA}) pins must always be connected to the external power supply, in the permitted range.
2. V_{IN} maximum value must always be respected. Refer to *Table 14* for the values of the maximum allowed injected current.

Table 14. Current characteristics

Symbol	Ratings	Max.	Unit
ΣI_{VDD}	Total current into sum of all V_{DD} power lines (source)(1)	240	mA
ΣI_{VSS}	Total current out of sum of all V_{SS} ground lines (sink)(1)	- 240	
ΣIV_{DDUSB}	Total current into V_{DDUSB} power line (source)	25	
I_{VDD}	Maximum current into each V_{DD} power pin (source)(1)	100	
I_{VSS}	Maximum current out of each V_{SS} ground pin (sink)(1)	- 100	
I_{IO}	Output current sunk by any I/O and control pin	25	
	Output current sourced by any I/Os and control pin	- 25	
ΣI_{IO}	Total output current sunk by sum of all I/Os and control pins (2)	120	
	Total output current sunk by sum of all USB I/Os	25	
	Total output current sourced by sum of all I/Os and control pins(2)	-120	
$I_{INJ(PIN)}$	Injected current on FT, FTf, RST and B pins	–5/+0(3)	
	Injected current on TTa pins	±5(4)	
$\Sigma I_{INJ(PIN)}$	Total injected current (sum of all I/O and control pins)(5)	±25	

1. All main power (V_{DD}, V_{DDA}) and ground (V_{SS}, V_{SSA}) pins must always be connected to the external power supply, in the permitted range.
2. This current consumption must be correctly distributed over all I/Os and control pins. The total output current must not be sunk/sourced between two consecutive power supply pins referring to high pin count LQFP packages.
3. Positive injection is not possible on these I/Os and does not occur for input voltages lower than the specified maximum value.
4. A positive injection is induced by $V_{IN}>V_{DDA}$ while a negative injection is induced by $V_{IN}<V_{SS}$. IINJ(PIN) must never be exceeded. Refer to *Table 13* for the maximum allowed input voltage value.
5. When several inputs are submitted to a current injection, the maximum $\Sigma I_{INJ(PIN)}$ is the absolute sum of the positive and negative injected currents (instantaneous values).

Table 15. Thermal characteristics

Symbol	Ratings	Value	Unit
T_{STG}	Storage temperature range	–65 to +150	°C
T_J	Maximum junction temperature	125	°C

6.3 Operating conditions

6.3.1 General operating conditions

Table 16. General operating conditions

Symbol	Parameter	Conditions[1]		Min	Typ	Max	Unit
f_{HCLK}	Internal AHB clock frequency	Power Scale 3 (VOS[1:0] bits in PWR_CR register = 0x01), Regulator ON, over-drive OFF		0	-	120	MHz
		Power Scale 2 (VOS[1:0] bits in PWR_CR register = 0x10), Regulator ON	Over-drive OFF	0	-	144	
			Over-drive ON		-	168	
		Power Scale 1 (VOS[1:0] bits in PWR_CR register= 0x11), Regulator ON	Over-drive OFF	0	-	168	
			Over-drive ON		-	180	
f_{PCLK1}	Internal APB1 clock frequency	Over-drive OFF		0	-	42	
		Over-drive ON		0	-	45	
f_{PCLK2}	Internal APB2 clock frequency	Over-drive OFF		0	-	84	
		Over-drive ON		0	-	90	

Table 16. General operating conditions (continued)

Symbol	Parameter	Conditions[1]	Min	Typ	Max	Unit
V_{DD}	Standard operating voltage	-	1.7[2]	-	3.6	V
V_{DDA}[3][4]	Analog operating voltage (ADC limited to 1.2 M samples)	Must be the same potential as V_{DD}[5]	1.7[2]	-	2.4	
	Analog operating voltage (ADC limited to 2.4 M samples)		2.4	-	3.6	
V_{BAT}	Backup operating voltage	-	1.65	-	3.6	
VDDUSB	USB supply voltage (supply voltage for PA11,PA12, PB14 and PB15 pins)	USB not used	1.7	-	3.6	
		USB used	3	-	3.6	
V_{12}	Regulator ON: 1.2 V internal voltage on V_{CAP_1}/V_{CAP_2} pins	Power Scale 3 ((VOS[1:0] bits in PWR_CR register = 0x01), 120 MHz HCLK max frequency	1.08	1.14	1.20	
		Power Scale 2 ((VOS[1:0] bits in PWR_CR register = 0x10), 144 MHz HCLK max frequency with over-drive OFF or 168 MHz with over-drive ON	1.20	1.26	1.32	
		Power Scale 1 ((VOS[1:0] bits in PWR_CR register = 0x11), 168 MHz HCLK max frequency with over-drive OFF or 180 MHz with over-drive ON	1.26	1.32	1.40	
	Regulator OFF: 1.2 V external voltage must be supplied from external regulator on V_{CAP_1}/V_{CAP_2} pins[6]	Max frequency 120 MHz	1.10	1.14	1.20	
		Max frequency 144 MHz	1.20	1.26	1.32	
		Max frequency 168 MHz	1.26	1.32	1.38	
V_{IN}	Input voltage on RST, FTf and FT pins[7]	2 V ≤V_{DD} ≤3.6 V	–0.3	-	5.5	V
		1.7 V ≤ V_{DD} ≤ 2 V	–0.3	-	5.2	
	Input voltage on TTa pins	-	–0.3	-	V_{DDA}+0.3	
	Input voltage on BOOT0 pin	-	0	-	9	
P_D	Power dissipation at T_A = 85 °C for suffix 6 or T_A = 105 °C for suffix 7[8]	LQFP64	-	-	345	mW
		WLCSP81	-	-	417	
		LQFP100	-	-	476	
		LQFP 144	-	-	606	
		UFBGA144 (7x7)	-	-	392	
		UFBGA144(10x10)	-	-	417	
T_A	Ambient temperature for 6 suffix version	Maximum power dissipation	–40	-	85	°C
		Low power dissipation[9]	–40	-	105	
	Ambient temperature for 7 suffix version	Maximum power dissipation	–40	-	105	°C
		Low power dissipation[9]	–40	-	125	
T_J	Junction temperature range	6 suffix version	–40	-	105	°C
		7 suffix version	–40	-	125	

1. The over-drive mode is not supported at the voltage ranges from 1.7 to 2.1 V.
2. V_{DD}/V_{DDA} minimum value of 1.7 V is obtained with the use of an external power supply supervisor (refer to *Section 3.16.2: Internal reset OFF*).
3. When the ADC is used, refer to *Table 74: ADC characteristics*.
4. If V_{REF+} pin is present, it must respect the following condition: $V_{DDA}-V_{REF+} < 1.2$ V.
5. It is recommended to power V_{DD} and V_{DDA} from the same source. A maximum difference of 300 mV between V_{DD} and V_{DDA} can be tolerated during power-up and power-down operation.
6. The over-drive mode is not supported when the internal regulator is OFF.
7. To sustain a voltage higher than VDD+0.3, the internal Pull-up and Pull-Down resistors must be disabled
8. If T_A is lower, higher P_D values are allowed as long as T_J does not exceed T_{Jmax}.
9. In low power dissipation state, T_A can be extended to this range as long as T_J does not exceed T_{Jmax}.

Table 17. Limitations depending on the operating power supply range

Operating power supply range	ADC operation	Maximum Flash memory access frequency with no wait states ($f_{Flashmax}$)	Maximum HCLK frequency vs Flash memory wait states (1)(2)	I/O operation	Possible Flash memory operations
V_{DD} =1.7 to 2.1 V(3)	Conversion time up to 1.2 Msps	20 MHz(4)	168 MHz with 8 wait states and over-drive OFF	– No I/O compensation	8-bit erase and program operations only
V_{DD} = 2.1 to 2.4 V	Conversion time up to 1.2 Msps	22 MHz	180 MHz with 8 wait states and over-drive ON	– No I/O compensation	16-bit erase and program operations
V_{DD} = 2.4 to 2.7 V	Conversion time up to 2.4 Msps	24 MHz	180 MHz with 7 wait states and over-drive ON	– I/O compensation works	16-bit erase and program operations
V_{DD} = 2.7 to 3.6 V(5)	Conversion time up to 2.4 Msps	30 MHz	180 MHz with 5 wait states and over-drive ON	– I/O compensation works	32-bit erase and program operations

1. Applicable only when the code is executed from Flash memory. When the code is executed from RAM, no wait state is required.
2. Thanks to the ART accelerator and the 128-bit Flash memory, the number of wait states given here does not impact the execution speed from Flash memory since the ART accelerator allows to achieve a performance equivalent to 0 wait state program execution.
3. V_{DD}/V_{DDA} minimum value of 1.7 V is obtained with the use of an external power supply supervisor (refer to *Section 3.16.2: Internal reset OFF*).
4. Prefetch is not available.
5. The voltage range for USB full speed PHYs can drop down to 2.7 V. However the electrical characteristics of D- and D+ pins will be degraded between 2.7 and 3 V.

6.3.2 VCAP_1/VCAP_2 external capacitor

Stabilization for the main regulator is achieved by connecting external capacitor C_{EXT} to the V_{CAP_1} and V_{CAP_2} pin. For packages supporting only 1 V_{CAP} pin, the 2 C_{EXT} capacitors are replaced by a single capacitor. C_{EXT} is specified in *Table 18*.

Figure 20. External capacitor C_{EXT}

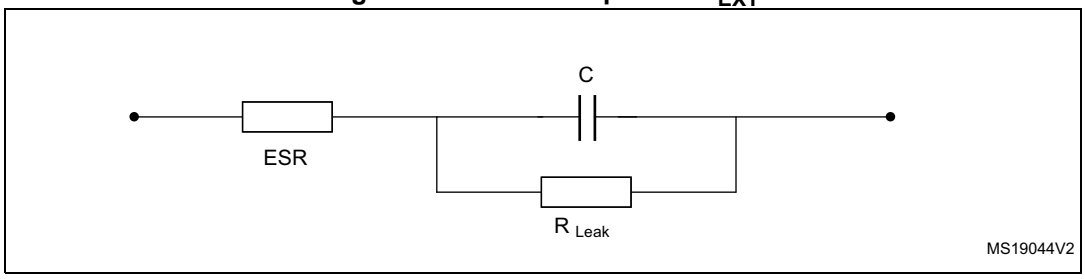

1. Legend: ESR is the equivalent series resistance.

Table 18. VCAP_1/VCAP_2 operating conditions(1)

Symbol	Parameter	Conditions
C_{EXT}	Capacitance of external capacitor	2.2 µF
ESR	ESR of external capacitor	< 2 Ω
C_{EXT}	Capacitance of external capacitor with a single V_{CAP} pin available	4.7 µF
ESR	ESR of external capacitor with a single V_{CAP} pin available	< 1 Ω

1. When bypassing the voltage regulator, the two 2.2 µF V_{CAP} capacitors are not required and should be replaced by two 100 nF decoupling capacitors.

6.3.3 Operating conditions at power-up / power-down (regulator ON)

Subject to general operating conditions for T_A.

Table 19. Operating conditions at power-up/power-down (regulator ON)

Symbol	Parameter	Min	Max
t_{VDD}	V_{DD} rise time rate	20	∞
	V_{DD} fall time rate	20	∞

6.3.4 Operating conditions at power-up / power-down (regulator OFF)

Subject to general operating conditions for T_A.

Table 20. Operating conditions at power-up / power-down (regulator OFF)(1)

Symbol	Parameter	Conditions	Min	Max	Unit
t_{VDD}	V_{DD} rise time rate	Power-up	20	∞	µs/V
	V_{DD} fall time rate	Power-down	20	∞	
t_{VCAP}	V_{CAP_1} and V_{CAP_2} rise time rate	Power-up	20	∞	
	V_{CAP_1} and V_{CAP_2} fall time rate	Power-down	20	∞	

1. To reset the internal logic at power-down, a reset must be applied on pin PA0 when V_{DD} reach below 1.08 V.

6.3.5 Reset and power control block characteristics

The parameters given in *Table 21* are derived from tests performed under ambient temperature and V_{DD} supply voltage conditions summarized in *Table 16*.

Table 21. reset and power control block characteristics

Symbol	Parameter	Conditions	Min	Typ	Max	Unit
V_{PVD}	Programmable voltage detector level selection	PLS[2:0]=000 (rising edge)	2.09	2.14	2.19	V
		PLS[2:0]=000 (falling edge)	1.98	2.04	2.08	V
		PLS[2:0]=001 (rising edge)	2.23	2.30	2.37	V
		PLS[2:0]=001 (falling edge)	2.13	2.19	2.25	V
		PLS[2:0]=010 (rising edge)	2.39	2.45	2.51	V
		PLS[2:0]=010 (falling edge)	2.29	2.35	2.39	V
		PLS[2:0]=011 (rising edge)	2.54	2.60	2.65	V
		PLS[2:0]=011 (falling edge)	2.44	2.51	2.56	V
		PLS[2:0]=100 (rising edge)	2.70	2.76	2.82	V
		PLS[2:0]=100 (falling edge)	2.59	2.66	2.71	V
		PLS[2:0]=101 (rising edge)	2.86	2.93	2.99	V
		PLS[2:0]=101 (falling edge)	2.65	2.84	3.02	V
		PLS[2:0]=110 (rising edge)	2.96	3.03	3.10	V
		PLS[2:0]=110 (falling edge)	2.85	2.93	2.99	V
		PLS[2:0]=111 (rising edge)	3.07	3.14	3.21	V
		PLS[2:0]=111 (falling edge)	2.95	3.03	3.09	V
$V_{PVDhyst}$(1)	PVD hysteresis	-	-	100	-	mV
$V_{POR/PDR}$	Power-on/power-down reset threshold	Falling edge	1.60	1.68	1.76	V
		Rising edge	1.64	1.72	1.80	V
$V_{PDRhyst}$(1)	PDR hysteresis	-	-	40	-	mV
V_{BOR1}	Brownout level 1 threshold	Falling edge	2.13	2.19	2.24	V
		Rising edge	2.23	2.29	2.33	V
V_{BOR2}	Brownout level 2 threshold	Falling edge	2.44	2.50	2.56	V
		Rising edge	2.53	2.59	2.63	V
V_{BOR3}	Brownout level 3 threshold	Falling edge	2.75	2.83	2.88	V
		Rising edge	2.85	2.92	2.97	V
$V_{BORhyst}$(1)	BOR hysteresis	-	-	100	-	mV
$T_{RSTTEMPO}$(1)(2)	POR reset temporization	-	0.5	1.5	3.0	ms

Table 21. reset and power control block characteristics (continued)

Symbol	Parameter	Conditions	Min	Typ	Max	Unit
I_{RUSH}(1)	InRush current on voltage regulator power-on (POR or wakeup from Standby)	-	-	160	200	mA
E_{RUSH}(1)	InRush energy on voltage regulator power-on (POR or wakeup from Standby)	V_{DD} = 1.7 V, T_A = 105 °C, I_{RUSH} = 171 mA for 31 µs	-	-	5.4	µC

1. Guaranteed based on test during characterization.
2. The reset temporization is measured from the power-on (POR reset or wakeup from V_{BAT}) to the instant when first instruction is read by the user application code.

6.3.6 Over-drive switching characteristics

When the over-drive mode switches from enabled to disabled or disabled to enabled, the system clock is stalled during the internal voltage set-up.

The over-drive switching characteristics are given in *Table 22*. They are sbject to general operating conditions for T_A.

Table 22. Over-drive switching characteristics(1)

Symbol	Parameter	Conditions	Min	Typ	Max	Unit
Tod_swen	Over_drive switch enable time	HSI	-	45	-	µs
		HSE max for 4 MHz and min for 26 MHz	45	-	100	
		External HSE 50 MHz	-	40	-	
Tod_swdis	Over_drive switch disable time	HSI	-	20	-	
		HSE max for 4 MHz and min for 26 MHz.	20	-	80	
		External HSE 50 MHz	-	15	-	

1. Guaranteed based on test during characterization.

6.3.7 Supply current characteristics

The current consumption is a function of several parameters and factors such as the operating voltage, ambient temperature, I/O pin loading, device software configuration, operating frequencies, I/O pin switching rate, program location in memory and executed binary code.

The current consumption is measured as described in *Figure 19: Current consumption measurement scheme*.

All the run-mode current consumption measurements given in this section are performed with a reduced code that gives a consumption equivalent to CoreMark code.

Typical and maximum current consumption

The MCU is placed under the following conditions:

- All I/O pins are in input mode with a static value at V_{DD} or V_{SS} (no load).
- All peripherals are disabled except if it is explicitly mentioned.
- The Flash memory access time is adjusted both to f_{HCLK} frequency and V_{DD} range (see *Table 17: Limitations depending on the operating power supply range*).
- Regulator ON
- The voltage scaling and over-drive mode are adjusted to f_{HCLK} frequency as follows:
  - Scale 3 for $f_{HCLK} \leq 120$ MHz
  - Scale 2 for 120 MHz < $f_{HCLK} \leq 144$ MHz
  - Scale 1 for 144 MHz < $f_{HCLK} \leq 180$ MHz. The over-drive is only ON at 180 MHz.
- The system clock is HCLK, $f_{PCLK1} = f_{HCLK}/4$, and $f_{PCLK2} = f_{HCLK}/2$.
- External clock frequency is 8 MHz and PLL is ON when f_{HCLK} is higher than 16 MHz.
- Flash is enabled except if explicitly mentioned as disable.
- The maximum values are obtained for V_{DD} = 3.6 V and a maximum ambient temperature (T_A), and the typical values for T_A= 25 °C and V_{DD} = 3.3 V unless otherwise specified.

Table 23. Typical and maximum current consumption in Run mode, code with data processing running from Flash memory (ART accelerator enabled except prefetch) or RAM(1)

Symbol	Parameter	Conditions	f_{HCLK} (MHz)	Typ	Max(2)			Unit
					T_A = 25 °C	T_A = 85 °C	T_A = 105 °C	
I_{DD}	Supply current in RUN mode	External clock, PLL ON, all peripherals enabled(3)(4)	180	72	83.0(5)	100.0	110.0(5)	mA
			168	65	71.0	95.3	101.0	
			150	59	63.6	85.4	100.8	
			144(6)	54	58.4	78.8	91.2	
			120	40	44.9	62.1	73.2	
			90	30	35.3	50.7	60.0	
			60	21	25.5	39.2	46.8	
			30	12	16.2	28.1	36.0	
			25	10	14.41	26.17	32.4	
		HSI, PLL OFF, all peripherals enabled	16	6	11.4	23.1	25.2	
			8	3	9.5	20.3	22.5	
			4	2.3	8.3	18.9	21.1	
			2	1.8	7.7	18.1	20.5	
		External clock, PLL ON, all Peripherals disabled(3)	180	32	42.0(5)	59.0	75.0(5)	
			168	29	35.5	51.4	55.7	
			150	26	31.5	47.8	51.9	
			144(6)	24	29.2	44.7	48.6	
			120	18	23.3	36.8	40.4	
			90	14	19.0	31.8	35.1	
			60	10	14.7	26.9	29.9	
			30	6	10.7	22.1	24.9	
			25	5	9.96	21.24	24.02	
		HSI, PLL OFF, all peripherals disabled(3)	16	3	8.7	18.9	21.9	
			8	2	8.1	17.8	20.9	
			4	1.7	7.64	17.23	20.32	
			2	1.4	7.4	16.94	20.03	

1. Code and data processing running from SRAM1 using boot pins.
2. Guaranteed based on test during characterization.
3. When analog peripheral blocks such as ADCs, DACs, HSE, LSE, HSI, or LSI are ON, an additional power consumption should be considered.
4. When the ADC is ON (ADON bit set in the ADC_CR2 register), add an additional power consumption of 1.6 mA per ADC for the analog part.
5. Tested in production.
6. Overdrive OFF

Table 24. Typical and maximum current consumption in Run mode, code with data processing running from Flash memory (ART accelerator enabled with prefetch) or RAM(1)

Symbol	Parameter	Conditions	f_{HCLK} (MHz)	Typ	Max(2)			Unit
					T_A = 25 °C	T_A = 85 °C	T_A = 105 °C	
I_{DD}	Supply current in RUN mode	External clock, PLL ON, all peripherals enabled(3)(4)	180	86	93.0	115.0	125.0	mA
			168(5)	79	85.1	111.2	117.7	
			150	73	79.6	104.8	111.2	
			144(5)	68	73.5	97.3	103.3	
			120	54	59.3	79.7	84.7	
			90	42	47.23	65.50	70.10	
			60	29	33.7	49.5	53.4	
			30	16	20.8	34.0	37.4	
			25	13	18.4	31.2	34.5	
		HSI, PLL OFF, all peripherals enabled(3)(4)	16	8	13.8	25.0	28.3	
			8	5	10.8	21.1	24.2	
			4	3.0	9.1	18.9	22.0	
			2	2.1	8.1	17.8	20.9	
		External clock, PLL ON, all Peripherals disabled(3)	180	46	55.0	75.0	86.0	
			168	43	49.6	67.5	72.6	
			150	41	48.2	65.8	70.8	
			144(5)	38	43.6	61.9	66.8	
			120	32	37.3	53.7	58.0	
			90	26	30.7	46.0	50.0	
			60	18	22.8	36.4	40.1	
			30	10	14.9	27.1	30.2	
			25	9	13.55	25.40	28.54	
		HSI, PLL OFF, all peripherals disabled(3)	16	5	11.1	21.8	25.0	
			8	3	9.5	19.4	22.5	
			4	2.4	8.34	18.10	21.17	
			2	1.8	7.77	17.39	20.50	

1. Code and data processing running from SRAM1 using boot pins.
2. Guaranteed based on test during characterization.
3. When analog peripheral blocks such as ADCs, DACs, HSE, LSE, HSI, or LSI are ON, an additional power consumption should be considered.
4. When the ADC is ON (ADON bit set in the ADC_CR2 register), add an additional power consumption of 1.6 mA per ADC for the analog part.
5. Overdrive OFF

Table 25. Typical and maximum current consumption in Run mode, code with data processing running from Flash memory (ART accelerator disabled)

Symbol	Parameter	Conditions	f_{HCLK} (MHz)	Typ	Max(1)			Unit
					TA= 25 °C	TA=85 °C	TA=105 °C	
I_{DD}	Supply current in RUN mode	External clock, PLL ON, all peripherals enabled(2)(3)	180	81	89.0	110.0	120.0	mA
			168(4)	74	80.2	105.7	112.0	
			150	69	74.9	99.5	105.6	
			144(4)	63	69.3	92.4	98.1	
			120	51	56.3	76.1	81.1	
			90	40	45.32	63.19	67.63	
			60	28	33.1	48.7	52.6	
			30	16	20.8	34.0	37.4	
			25	13	18.4	31.2	34.5	
		External clock, PLL ON, all Peripherals disabled(2)(3)	16	8	13.8	25.0	28.2	
			8	5	10.8	21.1	24.2	
			4	3.0	9.1	19.0	22.0	
			2	2.1	8.1	17.9	20.9	
			180	41	47.0	69.0	79.0	
			168	38	43.2	61.9	67.1	
			150	37	41.8	60.3	65.4	
			144(4)	34	39.3	56.9	61.6	
			120	29	34.3	50.2	54.4	
		HSI, PLL OFF, all peripherals disabled(3)	90	24	28.8	43.6	47.5	
			60	17	22.0	35.6	39.2	
			30	10	14.8	27.0	30.1	
			25	8	13.51	25.36	28.47	
		HSI, PLL OFF, all Peripherals disabled(3)	16	5	11.1	21.8	24.9	
			8	3	9.5	19.4	22.5	
			4	2.3	8.35	18.12	21.17	
			2	1.8	7.78	17.42	20.51	

1. Guaranteed based on test during characterization unless otherwise specified.
2. When analog peripheral blocks such as ADCs, DACs, HSE, LSE, HSI, or LSI are ON, an additional power consumption should be considered.
3. When the ADC is ON (ADON bit set in the ADC_CR2 register), add an additional power consumption of 1.6 mA per ADC for the analog part.
4. Overdrive OFF

Table 26. Typical and maximum current consumption in Sleep mode(1)

Symbol	Parameter	Conditions		fHCLK (MHz)	Typ	Max			Unit
						T_A = 25 °C	T_A = 25 °C	T_A = 25 °C	
IDD	Supply current in Sleep mode	all peripherals enabled	External clock, PLL ON, Flash on	180	51.2	59.00	77.25	102.00	mA
				168(2)	46.8	53.94	66.48	79.40	
				150	42.2	49.26	60.84	73.41	
				144(2)	38.6	45.37	55.47	66.96	
				120	29.3	35.70	42.49	51.46	
				90	22.8	29.17	34.78	43.12	
				60	16.3	22.41	27.12	34.83	
				30	10.1	16.03	19.72	26.86	
				25	9.0	14.92	18.41	25.38	
			HSI, PLL off, Flash on	16	6.5	13.10	15.1	22.3	
				8	5.2	12.31	13.5	20.4	
				4	4.5	11.63	12.5	19.3	
				2	4.1	11.23	12.0	18.8	

Table 26. Typical and maximum current consumption in Sleep mode[1] (continued)

Symbol	Parameter	Conditions		fHCLK (MHz)	Typ	Max			Unit
						T_A = 25 °C	T_A = 25 °C	T_A = 25 °C	
IDD	Supply current in Sleep mode	External clock, PLL on all peripherals disabled	Flash on	180	11.36	17.59	28.2	51.6	mA
				168[2]	10.20	16.19	22.0	31.8	
				150	9.53	15.59	21.1	30.9	
				144[2]	8.90	14.87	19.7	28.4	
				120	7.35	13.24	16.5	23.3	
				90	6.39	12.40	15.3	21.9	
				60	5.28	11.17	14.1	20.7	
				30	4.43	10.31	13.1	19.6	
				25	4.23	10.12	12.85	19.30	
			Flash in Deep Power Down mode	180	8.3	13.44	30.72	37.20	
				168[2]	7.3	12.25	25.16	28.80	
				150	6.7	11.60	24.27	27.84	
				144[2]	6.1	11.08	23.25	26.28	
				120	4.7	9.64	20.95	23.72	
				90	3.8	8.80	19.77	22.57	
				60	2.8	7.74	18.69	21.32	
				30	2.0	6.89	17.66	20.40	
				25	1.8	6.70	17.43	20.17	
			Flash in STOP mode	180	8.3	13.44	30.72	37.20	
				168[2]	7.3	12.25	25.16	28.80	
				150	6.7	11.60	24.27	27.84	
				144[2]	6.1	11.08	23.25	26.28	
				120	4.7	9.64	20.95	23.72	
				90	3.8	8.80	19.77	22.57	
				60	2.8	7.74	18.69	21.32	
				30	2.0	6.89	17.66	20.40	
				25	1.8	6.70	17.43	20.17	

Table 26. Typical and maximum current consumption in Sleep mode(1) (continued)

Symbol	Parameter	Conditions		fHCLK (MHz)	Typ	Max			Unit
						T_A = 25 °C	T_A = 25 °C	T_A = 25 °C	
IDD	Supply current in Sleep mode	HSI, PLL off, all peripherals disabled	Flash on	16	3.89	4.93	11.72	18.54	mA
				8	2.45	3.29	11.66	18.46	
				4	1.69	2.56	11.60	18.40	
				2	1.28	2.22	11.57	18.37	
			Flash in Deep Power Down mode	16	1.0	6.65	16.54	19.50	
				8	0.9	6.93	16.48	19.45	
				4	0.9	6.90	16.43	19.39	
				2	0.9	6.88	16.41	19.37	
			Flash in STOP mode	16	1.0	6.7	16.5	19.5	
				8	0.9	6.9	16.5	19.5	
				4	0.9	6.9	16.4	19.4	
				2	0.9	6.9	16.4	19.4	

1. Guaranteed based on test during characterization unless otherwise specified.
2. Overdrive OFF

Table 27. Typical and maximum current consumptions in Stop mode

Symbol	Parameter	Conditions	Typ	Max			Unit
				V_{DD} = 3.6 V			
			T_A = 25 °C	T_A = 25 °C(1)	T_A = 85 °C	T_A = 105 °C(1)	
$I_{DD_STOP_NM}$ (normal mode)	Supply current in Stop mode with voltage regulator in main regulator mode	Flash memory in Stop mode, all oscillators OFF, no independent watchdog	0.234	1.2	10	16	mA
		Flash memory in Deep power down mode, all oscillators OFF, no independent watchdog	0.205	1	9.5	15	
	Supply current in Stop mode with voltage regulator in Low Power regulator mode	Flash memory in Stop mode, all oscillators OFF, no independent watchdog	0.15	0.95	8.5	14	
		Flash memory in Deep power down mode, all oscillators OFF, no independent watchdog	0.121	0.9	6	12	
$I_{DD_STOP_UDM}$(under-drive mode)	Supply current in Stop mode with voltage regulator in main regulator and under-drive mode	Flash memory in Deep power down mode, main regulator in under-drive mode, all oscillators OFF, no independent watchdog	0.119	0.4	3	5	
	Supply current in Stop mode with voltage regulator in Low Power regulator and under-drive mode	Flash memory in Deep power down mode, Low Power regulator in under-drive mode, all oscillators OFF, no independent watchdog	0.055	0.35	3	5	

1. Data based on characterization, tested in production.

Table 28. Typical and maximum current consumptions in Standby mode

Symbol	Parameter	Conditions	Typ(1)			Max(2)			Unit
			T_A = 25 °C			T_A = 25 °C	T_A = 85 °C	T_A = 105 °C	
			V_{DD} = 1.7 V	V_{DD}= 2.4 V	V_{DD} = 3.3 V	V_{DD} = 3.3 V			
I_{DD_STBY}	Supply current in Standby mode	Backup SRAM ON, and LSE oscillator in low power mode	2.43	3.44	4.12	7	20	36	µA
		Backup SRAM OFF, RTC ON and LSE oscillator in low power mode	1.81	2.81	3.33	6	17	31	
		Backup SRAM ON, RTC ON and LSE oscillator in high drive mode	3.32	4.33	4.95	8	21	37	
		Backup SRAM OFF, RTC ON and LSE oscillator in high drive mode	2.57	3.59	4.16	7	18	32	
		Backup SRAM ON, RTC and LSE OFF	2.03	2.73	3.5	6(3)	19	35(3)	
		Backup SRAM OFF, RTC and LSE OFF	1.28	1.97	2.03	5(3)	16	30(3)	

1. When the PDR is OFF (internal reset is OFF), the typical current consumption is reduced by 1.2 µA.
2. Guaranteed based on test during characterization unless otherwise specified.
3. Tested in production.

Table 29. Typical and maximum current consumptions in V_{BAT} mode

Symbol	Parameter	Conditions[1]	Typ			Max[2]		Unit
			T_A = 25 °C			T_A = 85 °C	T_A = 105 °C	
			V_{BAT} = 1.7 V	V_{BAT}= 2.4 V	V_{BAT} = 3.3 V	V_{BAT} = 3.6 V		
I_{DD_VBAT}	Backup domain supply current	Backup SRAM ON, RTC ON and LSE oscillator in low power mode	1.46	1.62	1.83	6	11	µA
		Backup SRAM OFF, RTC ON and LSE oscillator in low power mode	0.72	0.85	1.00	3	5	
		Backup SRAM ON, RTC ON and LSE oscillator in high drive mode	2.24	2.40	2.64	-	-	
		Backup SRAM OFF, RTC ON and LSE oscillator in high drive mode	1.50	1.64	1.86	-	-	
		Backup SRAM ON, RTC and LSE OFF	0.74	0.75	0.78	5	10	
		Backup SRAM OFF, RTC and LSE OFF	0.05	0.05	0.05	2	4	

1. Crystal used: Abracon ABS07-120-32.768 kHz-T with a C_L of 6 pF for typical values.
2. Guaranteed based on test during characterization.

Figure 21. Typical V_{BAT} current consumption (RTC ON/backup RAM OFF and LSE in low power mode)

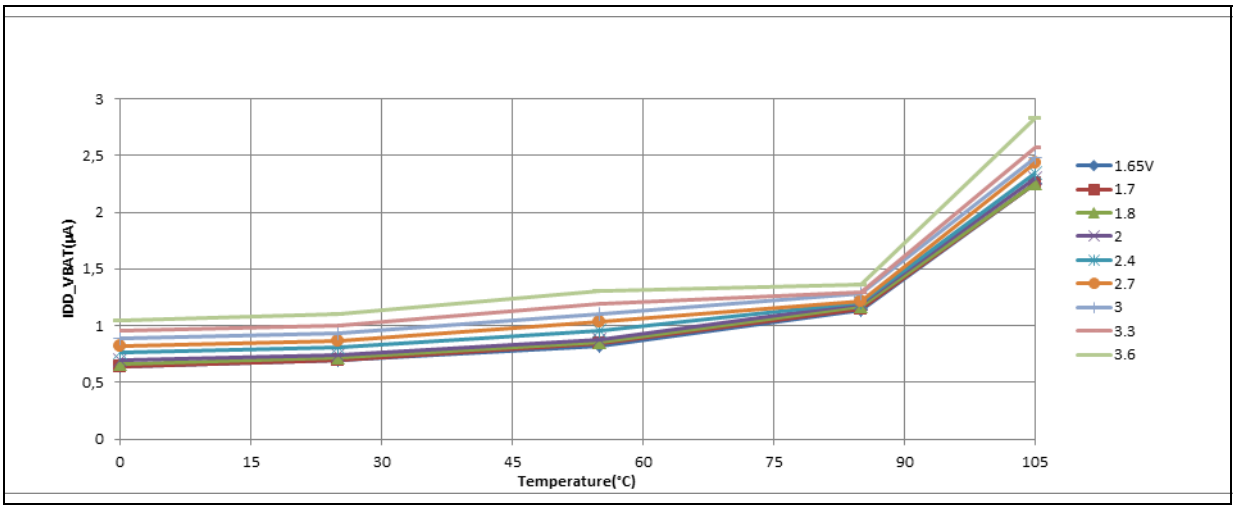

Figure 22. Typical V_{BAT} current consumption (RTC ON/backup RAM OFF and LSE in high drive mode)

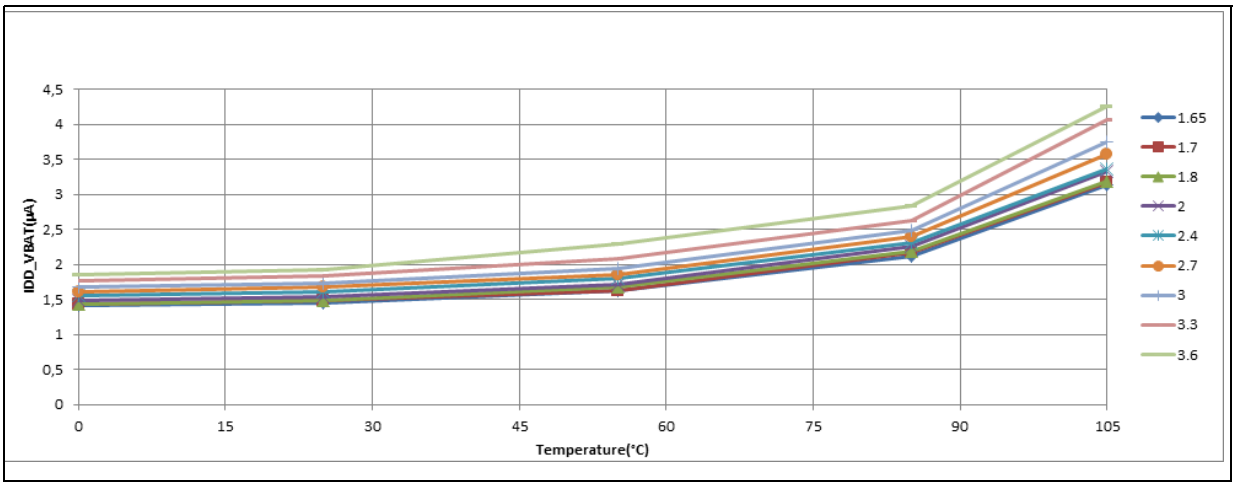

Additional current consumption

The MCU is placed under the following conditions:

- All I/O pins are configured in analog mode.
- The Flash memory access time is adjusted to fHCLK frequency.
- The voltage scaling is adjusted to fHCLK frequency as follows:
  - Scale 3 for $f_{HCLK} \leq 120$ MHz,
  - Scale 2 for 120 MHz < $f_{HCLK} \leq 144$ MHz
  - Scale 1 for 144 MHz < $f_{HCLK} \leq 180$ MHz. The over-drive is only ON at 180 MHz.
- The system clock is HCLK, $f_{PCLK1} = f_{HCLK}/4$, and $f_{PCLK2} = f_{HCLK}/2$.
- HSE crystal clock frequency is 8 MHz.
- Flash is enabled except if explicitly mentioned as disable.
- When the regulator is OFF, V12 is provided externally as described in *Table 16: General operating conditions*
- T_A= 25 °C.

Table 30. Typical current consumption in Run mode, code with data processing running from Flash memory or RAM, regulator ON (ART accelerator enabled except prefetch), VDD=1.7 V(1)

Symbol	Parameter	Conditions	f_{HCLK} (MHz)	Typ	Max			Unit
					T_A = 25 °C	T_A = 85 °C	T_A = 105 °C	
I_{DD}	Supply current in Run mode from V_{DD} supply	All Peripherals enabled	168	65.11	70.0	79.7	90.0	mA
			150	58.31	62.8	73.4	79.9	
			144	53.14	57.1	69.9	75.3	
			120	39.58	47.2	60.7	71.4	
			90	29.99	34.70	45.23	49.34	
			60	20.37	25.2	35.2	38.2	
			30	11.37	12.9	28.4	33.2	
			25	9.65	10.9	17.8	24.3	
		All Peripherals disabled	168	29.74	32.43	42.4	48.5	
			150	25.81	29.12	39.4	43.8	
			144	24.57	26.61	36.0	41.9	
			120	17.69	22.09	32.9	40.8	
			90	13.58	15.92	30.0	36.5	
			60	9.41	11.05	24.4	30.2	
			30	5.44	6.64	15.0	22.0	
			25	4.73	5.72	12.57	19.06	

1. When peripherals are enabled, the power consumption corresponding to the analog part of the peripherals (such as ADC, or DAC) is not included.

Table 31. Typical current consumption in Run mode, code with data processing running from Flash memory, regulator OFF (ART accelerator enabled except prefetch)(1)

Symbol	Parameter	Conditions	f_{HCLK} (MHz)	VDD=3.3 V		VDD=1.7 V		Unit
				I_{DD12}	I_{DD}	I_{DD12}	I_{DD}	
I_{DD12} / I_{DD}	Supply current in Run mode from V_{12} and V_{DD} supply	All Peripherals enabled	168	61.72	1.6	60.15	1.5	mA
			150	51.69	1.5	55.46	1.4	
			144	51.45	1.5	50.94	1.3	
			120	38.94	1.3	40.66	1.2	
			90	29.48	1.1	28.18	1.0	
			60	19.23	1.0	20.05	0.8	
			30	10.41	0.9	11.26	0.7	
			25	8.83	0.8	9.56	0.6	
		All Peripherals disabled	168	31.44	1.6	30.06	1.5	
			150	28.67	1.5	27.38	1.4	
			144	25.51	1.5	23.37	1.3	
			120	19.06	1.3	21.73	1.2	
			90	14.83	1.2	14.74	1.0	
			60	10.16	1.0	10.30	0.8	
			30	5.41	0.9	5.64	0.7	
			25	4.599	0.8	4.80	0.6	

1. When peripherals are enabled, the power consumption corresponding to the analog part of the peripherals (such as ADC, or DAC) is not included.

Table 32. Typical current consumption in Sleep mode, regulator ON, V_{DD}=1.7 V(1)

Symbol	Parameter	Conditions	f_{HCLK} (MHz)	Typ	Max			Unit
					T_A = 25 °C	T_A = 85 °C	T_A = 105 °C	
I_{DD}	Supply current in Sleep mode from V_{DD} supply	All Peripherals enabled Flash on	168	43.7	47.5	66.5	79.3	mA
			150	39.2	42.7	60.7	73.3	
			144	35.7	38.8	55.3	66.9	
			120	26.5	28.6	41.8	51.6	
			90	20.0	21.91	33.85	43.20	
			60	13.6	15.2	25.8	34.9	
			30	7.4	8.5	18.4	27.0	
			25	6.3	7.5	16.9	25.5	
		All Peripherals disabled, flash on	168	7.3	8.6	21.2	31.9	
			150	6.6	7.94	20.4	31.0	
			144	6.0	7.3	18.6	28.5	
			120	4.6	5.5	14.9	23.4	
			90	3.6	4.6	13.6	22.1	
			60	2.6	3.4	12.5	20.8	
			30	1.8	2.7	11.3	19.7	
			25	1.6	2.49	11.09	19.42	

1. When peripherals are enabled, the power consumption corresponding to the analog part of the peripherals (such as ADC, or DAC) is not included.

Table 33. Typical current consumption in Sleep mode, regulator OFF(1)

Symbol	Parameter	Conditions	f_{HCLK} (MHz)	VDD=3.3 V		VDD=1.7 V		Unit
				I_{DD12}	I_{DD}	I_{DD12}	I_{DD}	-
I_{DD12}/I_{DD}	Supply current in Sleep mode from V_{12} and V_{DD} supply	All Peripherals enabled	180	47.605	1.2	NA	NA	mA
			168	44.35	1.0	41.53	0.8	
			150	40.58	0.9	39.96	0.8	
			144	35.68	0.9	34.60	0.7	
			120	27.30	0.9	29.11	0.7	
			90	20.69	0.8	19.78	0.6	
			60	13.88	0.7	13.36	0.6	
			30	7.66	0.7	7.85	0.6	
			25	6.49	0.7	6.66	0.5	
		All Peripherals disabled	180	8.71	1.2	NA	NA	
			168	7.00	0.9	8.42	0.8	
			150	6.88	0.9	7.61	0.8	
			144	6.29	0.9	6.99	0.7	
			120	4.87	0.9	5.95	0.7	
			90	3.78	0.8	3.96	0.6	
			60	2.66	0.7	2.80	0.6	
			30	1.65	0.7	1.74	0.6	
			25	1.45	0.7	1.52	0.5	

1. When peripherals are enabled, the power consumption corresponding to the analog part of the peripherals (such as ADC, or DAC) is not included.

I/O system current consumption

The current consumption of the I/O system has two components: static and dynamic.

I/O static current consumption

All the I/Os used as inputs with pull-up generate current consumption when the pin is externally held low. The value of this current consumption can be simply computed by using the pull-up/pull-down resistors values given in *Table 56: I/O static characteristics*.

For the output pins, any external pull-down or external load must also be considered to estimate the current consumption.

Additional I/O current consumption is due to I/Os configured as inputs if an intermediate voltage level is externally applied. This current consumption is caused by the input Schmitt trigger circuits used to discriminate the input value. Unless this specific configuration is required by the application, this supply current consumption can be avoided by configuring these I/Os in analog mode. This is notably the case of ADC input pins which should be configured as analog inputs.

Caution: Any floating input pin can also settle to an intermediate voltage level or switch inadvertently, as a result of external electromagnetic noise. To avoid current consumption related to floating pins, they must either be configured in analog mode, or forced internally to a definite digital value. This can be done either by using pull-up/down resistors or by configuring the pins in output mode.

I/O dynamic current consumption

In addition to the internal peripheral current consumption (see *Table 35: Peripheral current consumption*), the I/Os used by an application also contribute to the current consumption. When an I/O pin switches, it uses the current from the MCU supply voltage to supply the I/O pin circuitry and to charge/discharge the capacitive load (internal or external) connected to the pin:

$$I_{SW} = V_{DD} \times f_{SW} \times C$$

where

I_{SW} is the current sunk by a switching I/O to charge/discharge the capacitive load

V_{DD} is the MCU supply voltage

f_{SW} is the I/O switching frequency

C is the total capacitance seen by the I/O pin: $C = C_{INT} + C_{EXT}$

The test pin is configured in push-pull output mode and is toggled by software at a fixed frequency.

Table 34. Switching output I/O current consumption(1)

Symbol	Parameter	Conditions	I/O toggling frequency (fsw)	Typ	Unit
I_{DDIO}	I/O switching Current	V_{DD} = 3.3 V C= C_{INT}(2)	2 MHz	0.0	mA
			8 MHz	0.2	
			25 MHz	0.6	
			50 MHz	1.1	
			60 MHz	1.3	
			84 MHz	1.8	
			90 MHz	1.9	
		V_{DD} = 3.3 V C_{EXT} = 0 pF C = C_{INT} + C_{EXT} + C_S	2 MHz	0.1	
			8 MHz	0.4	
			25 MHz	1.23	
			50 MHz	2.43	
			60 MHz	2.93	
			84 MHz	3.86	
			90 MHz	4.07	

Table 34. Switching output I/O current consumption(1) (continued)

Symbol	Parameter	Conditions	I/O toggling frequency (fsw)	Typ	Unit
I_{DDIO}	I/O switching Current	V_{DD} = 3.3 V C_{EXT} = 10 pF C = C_{INT} + C_{EXT} + C_S	2 MHz	0.18	mA
			8 MHz	0.67	
			25 MHz	2.09	
			50 MHz	3.6	
			60 MHz	4.5	
			84 MHz	7.8	
			90 MHz	9.8	
		V_{DD} = 3.3 V C_{EXT} = 22 pF C = C_{INT} + C_{EXT} + C_S	2 MHz	0.26	
			8 MHz	1.01	
			25 MHz	3.14	
			50 MHz	6.39	
			60 MHz	10.68	
		V_{DD} = 3.3 V C_{EXT} = 33 pF C = C_{INT} + Cext + C_S	2 MHz	0.33	
			8 MHz	1.29	
			25 MHz	4.23	
			50 MHz	11.02	

1. C_S is the PCB board capacitance including the pad pin. C_S = 7 pF (estimated value).
2. This test is performed by cutting the LQFP144 package pin (pad removal).

On-chip peripheral current consumption

The MCU is placed under the following conditions:

- At startup, all I/O pins are in analog input configuration.
- All peripherals are disabled unless otherwise mentioned.
- HCLK is the system clock. $f_{PCLK1} = f_{HCLK}/4$, and $f_{PCLK2} = f_{HCLK}/2$.
  The given value is calculated by measuring the difference of current consumption
  - with all peripherals clocked off
  - with only one peripheral clocked on
  - f_{HCLK} = 180 MHz (Scale1 + over-drive ON), f_{HCLK} = 144 MHz (Scale 2), f_{HCLK} = 120 MHz (Scale 3)"
- Ambient operating temperature is 25 °C and V_{DD}=3.3 V.

Table 35. Peripheral current consumption

Peripheral		I_{DD}(Typ Appli)			Unit
		Scale 1 + OverDrive	Scale 2	Scale 3	
AHB1	GPIOA	2.29	2.14	1.89	µA/MHz
	GPIOB	2.29	2.13	1.89	
	GPIOC	2.33	2.17	1.93	
	GPIOD	2.34	2.19	1.94	
	GPIOE	2.39	2.19	1.93	
	GPIOF	2.31	2.14	1.91	
	GPIOG	2.36	2.19	1.94	
	GPIOH	2.13	1.98	1.75	
	CRC	0.53	0.51	0.46	
	BKPSRAM	0.76	0.72	0.65	
	DMA1(1)	2.39N + 4.13	2.23N+3.56	1.97N+3.51	
	DMA2(1)	2.39N + 4.45	2.19N+3.72	2.00N+3.66	
	OTG_HS+ULPI	45.45	42.08	37.28	
AHB2	DCMI	3.74	3.42	3.01	µA/MHz
	OTGFS	30.04	27.88	24.69	
AHB3	FMC	16.15	15.01	13.33	µA/MHz
	QSPI	16.78	15.60	13.84	

Table 35. Peripheral current consumption (continued)

Peripheral		I_{DD}(Typ Appli)			Unit
		Scale 1 + OverDrive	Scale 2	Scale 3	
APB1	TIM2	18.18	16.92	15.07	µA/MHz
	TIM3	14.49	13.47	12.00	
	TIM4	15.18	14.11	12.50	
	TIM5	16.91	15.69	14.07	
	TIM6	2.69	2.47	2.20	
	TIM7	2.56	2.44	2.17	
	TIM12	7.07	6.56	5.83	
	TIM13	4.96	4.64	4.07	
	TIM14	5.09	4.72	4.27	
	WWDG	1.07	1.00	0.93	
	SPI2(2)	1.89	1.78	1.57	
	SPI3(2)	1.93	1.81	1.67	
	SPDIFRX	6.91	6.44	5.80	
	USART2	4.20	3.83	3.40	
	USART3	4.22	3.94	3.50	
	UART4	4.13	3.89	3.40	
	UART5	4.04	3.78	3.33	
	I2C1	3.98	3.69	3.33	
	I2C2	3.91	3.61	3.17	
	I2C3	3.76	3.53	3.13	
	FMPI2C1	5.51	5.19	4.57	
	CAN1	6.58	6.14	5.43	
	CAN2	5.91	5.56	4.90	
	CEC	0.71	0.69	0.60	
	DAC	2.96	2.72	2.40	

Table 35. Peripheral current consumption (continued)

Peripheral		I_{DD}(Typ Appli)			Unit
		Scale 1 + OverDrive	Scale 2	Scale 3	
APB2	TIM1	17.51	16.28	14.43	µA/MHz
	TIM8	18.40	17.10	15.22	
	USART1	4.53	4.21	3.72	
	USART6	4.53	4.21	3.72	
	ADC1	4.69	4.35	3.85	
	ADC2	4.70	4.35	3.87	
	ADC3	4.66	4.31	3.82	
	SDIO	9.06	8.38	7.47	
	SPI1	1.97	1.89	1.67	
	SPI4	1.88	1.75	1.57	
	SYSCFG	1.51	1.40	1.23	
	TIM9	8.17	7.64	6.77	
	TIM10	5.07	4.75	4.22	
	TIM11	5.37	5.06	4.50	
	SAI1	3.89	3.64	3.17	
	SAI2	3.74	3.49	3.10	
Bus Matrix		8.15	8.10	7.13	

1. N = Number of strean enable (1..8)
2. To enable an I2S peripheral, first set the I2SMOD bit and then the I2SE bit in the SPI_I2SCFGR register.

6.3.8 Wakeup time from low-power modes

The wakeup times given in *Table 36* are measured starting from the wakeup event trigger up to the first instruction executed by the CPU:

- For Stop or Sleep modes: the wakeup event is WFE.
- WKUP (PA0) pin is used to wakeup from Standby, Stop and Sleep modes.

All timings are derived from tests performed under ambient temperature and V_{DD}=3.3 V.

Table 36. Low-power mode wakeup timings

Symbol	Parameter	Conditions	Typ(1)	Max(1)	Unit
$t_{WUSLEEP}$(2)	Wakeup from Sleep	-	6	6	CPU clock cycle
$T_{WUSLEEPFDSM}$(1)	Wakeup from Sleep with Flash memory in Deep power down mode	-	33.5	50	µs
t_{WUSTOP}(2)	Wakeup from Stop mode with MR/LP regulator in normal mode	Main regulator is ON	12.8	15	
		Main regulator is ON and Flash memory in Deep power down mode	104.9	115	
		Low power regulator is ON	20.6	28	
		Low power regulator is ON and Flash memory in Deep power down mode	112.8	120	
t_{WUSTOP}(2)	Wakeup from Stop mode with MR/LP regulator in Under-drive mode	Main regulator in under-drive mode (Flash memory in Deep power-down mode)	110	140	
		Low power regulator in under-drive mode (Flash memory in Deep power-down mode)	114.4	128	
$t_{WUSTDBY}$(2)(3)	Wakeup from Standby mode	-	325	400	

1. Guaranteed based on test during characterization.
2. The wakeup times are measured from the wakeup event to the point in which the application code reads the first instruction.
3. $t_{WUSTDBY}$ maximum value is given at –40 °C.

6.3.9 External clock source characteristics

High-speed external user clock generated from an external source

In bypass mode the HSE oscillator is switched off and the input pin is a standard I/O. The external clock signal has to respect the *Table 56: I/O static characteristics*. However, the recommended clock input waveform is shown in *Figure 23*.

The characteristics given in *Table 37* result from tests performed using an high-speed external clock source, and under ambient temperature and supply voltage conditions summarized in *Table 16*.

Table 37. High-speed external user clock characteristics

Symbol	Parameter	Conditions	Min	Typ	Max	Unit
f_{HSE_ext}	External user clock source frequency(1)	-	1	-	50	MHz
V_{HSEH}	OSC_IN input pin high level voltage		$0.7V_{DD}$	-	V_{DD}	V
V_{HSEL}	OSC_IN input pin low level voltage		V_{SS}	-	$0.3V_{DD}$	
$t_{w(HSE)}$ $t_{w(HSE)}$	OSC_IN high or low time(1)		5	-	-	ns
$t_{r(HSE)}$ $t_{f(HSE)}$	OSC_IN rise or fall time(1)		-	-	10	
$C_{in(HSE)}$	OSC_IN input capacitance(1)	-	-	5	-	pF
$DuCy_{(HSE)}$	Duty cycle	-	45	-	55	%
I_L	OSC_IN Input leakage current	$V_{SS} \leq V_{IN} \leq V_{DD}$	-	-	±1	µA

1. Guaranteed by design.

Low-speed external user clock generated from an external source

In bypass mode the LSE oscillator is switched off and the input pin is a standard I/O. The external clock signal has to respect the *Table 56: I/O static characteristics*. However, the recommended clock input waveform is shown in *Figure 24*.

The characteristics given in *Table 38* result from tests performed using an low-speed external clock source, and under ambient temperature and supply voltage conditions summarized in *Table 16*.

Table 38. Low-speed external user clock characteristics

Symbol	Parameter	Conditions	Min	Typ	Max	Unit
f_{LSE_ext}	User External clock source frequency(1)	-	-	32.768	1000	kHz
V_{LSEH}	OSC32_IN input pin high level voltage		$0.7V_{DD}$	-	V_{DD}	V
V_{LSEL}	OSC32_IN input pin low level voltage		V_{SS}	-	$0.3V_{DD}$	
$t_{w(LSE)}$ $t_{f(LSE)}$	OSC32_IN high or low time(1)		450	-	-	ns
$t_{r(LSE)}$ $t_{f(LSE)}$	OSC32_IN rise or fall time(1)		-	-	200	
$C_{in(LSE)}$	OSC32_IN input capacitance(1)	-	-	5	-	pF
$DuCy_{(LSE)}$	Duty cycle	-	30	-	70	%
I_L	OSC32_IN Input leakage current	$V_{SS} \leq V_{IN} \leq V_{DD}$	-	-	±1	µA

1. Guaranteed by design.

Figure 23. High-speed external clock source AC timing diagram

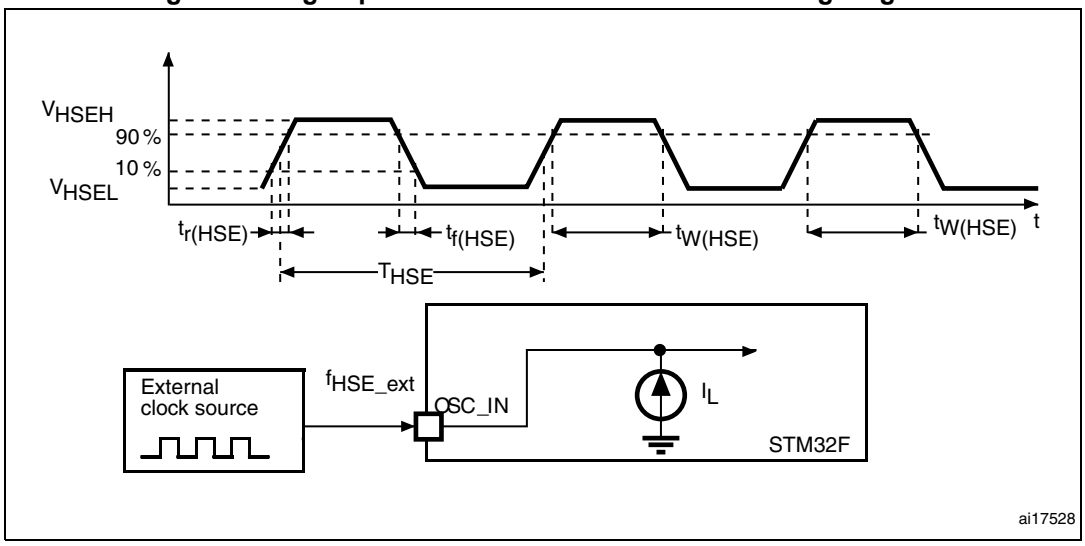

Figure 24. Low-speed external clock source AC timing diagram

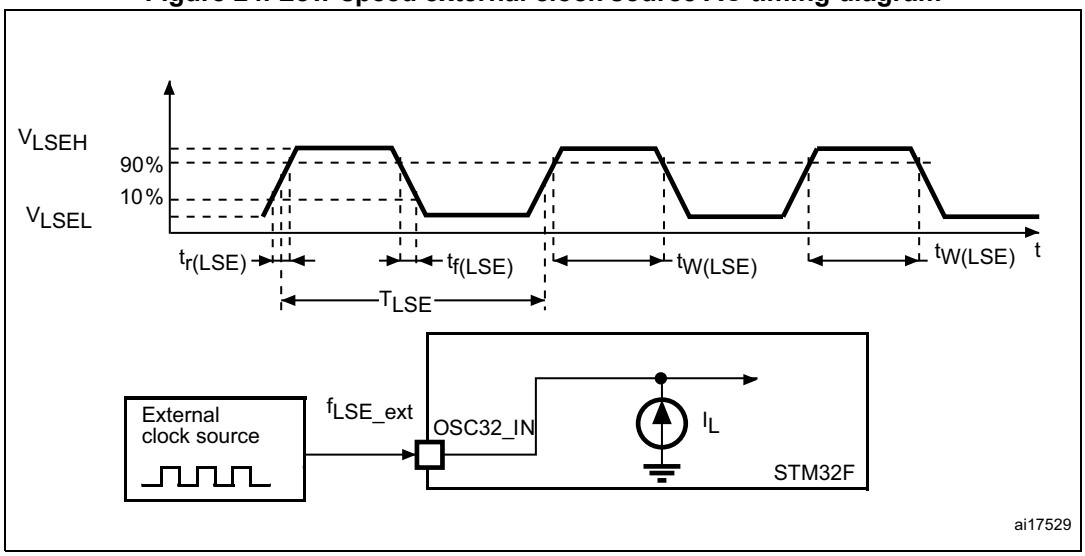

High-speed external clock generated from a crystal/ceramic resonator

The high-speed external (HSE) clock can be supplied with a 4 to 26 MHz crystal/ceramic resonator oscillator. All the information given in this paragraph are based on characterization results obtained with typical external components specified in *Table 39*. In the application, the resonator and the load capacitors have to be placed as close as possible to the oscillator pins in order to minimize output distortion and startup stabilization time. Refer to the crystal resonator manufacturer for more details on the resonator characteristics (frequency, package, accuracy).

Table 39. HSE 4-26 MHz oscillator characteristics (1)

Symbol	Parameter	Conditions	Min	Typ	Max	Unit
f_{OSC_IN}	Oscillator frequency	-	4	-	26	MHz
R_F	Feedback resistor	-	-	200	-	kΩ
I_{DD}	HSE current consumption	V_{DD}=3.3 V, ESR= 30 Ω, C_L=5 pF@25 MHz	-	450	-	µA
		V_{DD}=3.3 V, ESR= 30 Ω, C_L=10 pF@25 MHz	-	530	-	
ACC_{HSE}(2)	HSE accuracy	-	-500	-	500	ppm
G_m_crit_max	Maximum critical crystal g_m	Startup	-	-	1	mA/V
$t_{SU(HSE}$(3)	Startup time	V_{DD} is stabilized	-	2	-	ms

1. Guaranteed by design.
2. This parameter depends on the crystal used in the application. The minimum and maximum values must be respected to comply with USB standard specifications.
3. $t_{SU(HSE)}$ is the startup time measured from the moment it is enabled (by software) to a stabilized 8 MHz oscillation is reached. This value is Guaranteed based on test during characterization. It is measured for a standard crystal resonator and it can vary significantly with the crystal manufacturer.

For C_{L1} and C_{L2}, it is recommended to use high-quality external ceramic capacitors in the 5 pF to 25 pF range (typ.), designed for high-frequency applications, and selected to match the requirements of the crystal or resonator (see *Figure 25*). C_{L1} and C_{L2} are usually the same size. The crystal manufacturer typically specifies a load capacitance which is the series combination of C_{L1} and C_{L2}. PCB and MCU pin capacitance must be included (10 pF can be used as a rough estimate of the combined pin and board capacitance) when sizing C_{L1} and C_{L2}.

Note: For information on selecting the crystal, refer to the application note AN2867 "Oscillator design guide for ST microcontrollers" available from the ST website www.st.com.

Figure 25. Typical application with an 8 MHz crystal

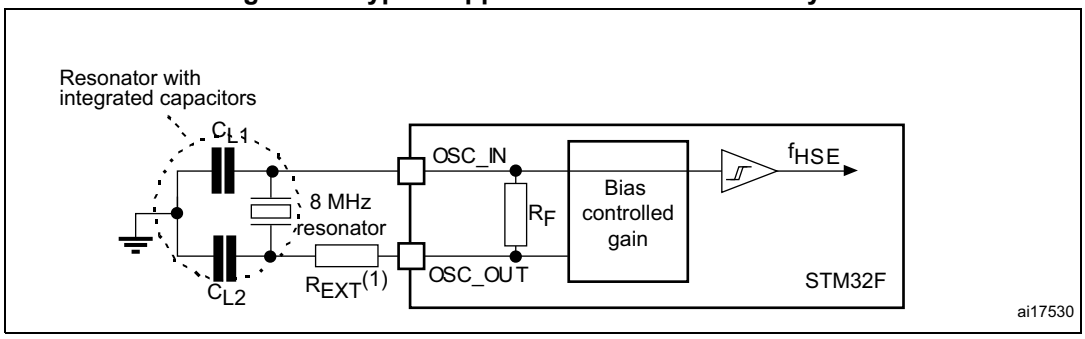

1. R_{EXT} value depends on the crystal characteristics.

Low-speed external clock generated from a crystal/ceramic resonator

The low-speed external (LSE) clock can be supplied with a 32.768 kHz crystal/ceramic resonator oscillator. All the information given in this paragraph are based on characterization results obtained with typical external components specified in *Table 40*. In the application, the resonator and the load capacitors have to be placed as close as

possible to the oscillator pins in order to minimize output distortion and startup stabilization time. Refer to the crystal resonator manufacturer for more details on the resonator characteristics (frequency, package, accuracy).

Table 40. LSE oscillator characteristics (f_{LSE} = 32.768 kHz) (1)

Symbol	Parameter	Conditions	Min	Typ	Max	Unit
R_F	Feedback resistor	-	-	18.4	-	MΩ
I_{DD}	LSE current consumption	-	-	-	1	µA
ACC_{LSE} (2)	LSE accuracy	-	-500	-	500	ppm
G_m_crit_max	Maximum critical crystal g_m	Startup low-power mode	-	-	0.56	µA/V
		Startup high-drive mode	-	-	1.5	
$t_{SU(LSE)}$ (3)	startup time	V_{DD} is stabilized	-	2	-	s

1. Guaranteed by design.
2. This parameter depends on the crystal used in the application. Refer to application note AN2867.
3. $t_{SU(LSE)}$ is the startup time measured from the moment it is enabled (by software) to a stabilized 32.768 kHz oscillation is reached. This value is guaranteed based on test during characterization. It is measured for a standard crystal resonator and it can vary significantly with the crystal manufacturer.

Note: For information on selecting the crystal, refer to the application note AN2867 "Oscillator design guide for ST microcontrollers" available from the ST website www.st.com.

Figure 26. Typical application with a 32.768 kHz crystal

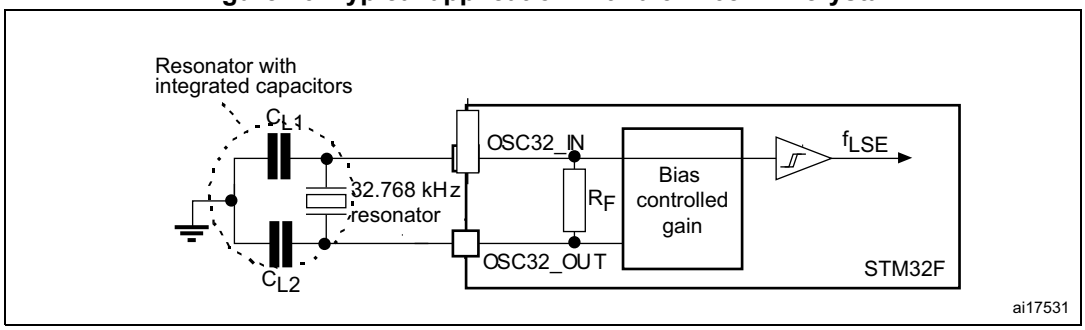

6.3.10 Internal clock source characteristics

The parameters given in *Table 41* and *Table 42* are derived from tests performed under ambient temperature and V_{DD} supply voltage conditions summarized in *Table 16*.

High-speed internal (HSI) RC oscillator

Table 41. HSI oscillator characteristics (1)

Symbol	Parameter	Conditions	Min	Typ	Max	Unit
f_{HSI}	Frequency	-	-	16	-	MHz
ACC_{HSI}	Accuracy of the HSI oscillator	User-trimmed with the RCC_CR register(2)	-	-	1	%
		T_A = - 40 to 105 °C(3)	- 8	-	4.5	%
		T_A = - 10 to 85 °C(3)	- 4	-	4	%
		T_A = 25 °C(4)	- 1	-	1	%
$t_{su(HSI)}$(2)	HSI oscillator startup time	-	-	2.2	4	µs
$I_{DD(HSI)}$(2)	HSI oscillator power consumption	-	-	60	80	µA

1. V_{DD} = 3.3 V, T_A = –40 to 105 °C unless otherwise specified.
2. Guaranteed by design.
3. Guaranteed based on test during characterization.
4. Factory calibrated, parts not soldered.

Figure 27. $LACC_{HSI}$ versus temperature

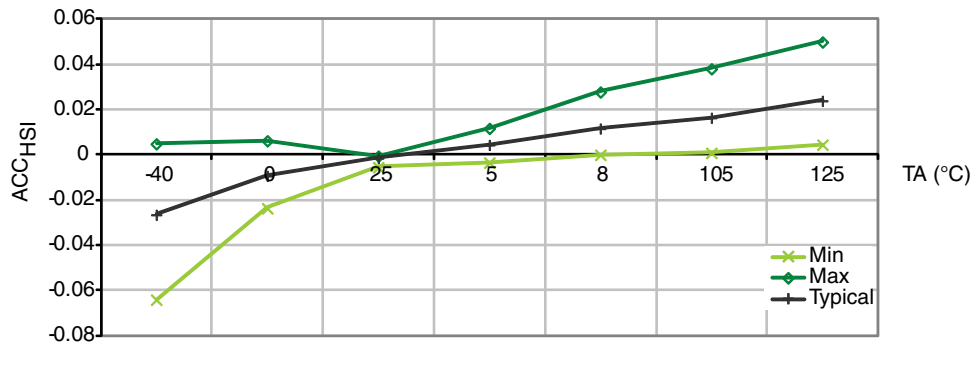

1. Guaranteed based on test during characterization.

Low-speed internal (LSI) RC oscillator

Table 42. LSI oscillator characteristics (1)

Symbol	Parameter	Min	Typ	Max	Unit
f_{LSI}(2)	Frequency	17	32	47	kHz
$t_{su(LSI)}$(3)	LSI oscillator startup time	-	15	40	µs
$I_{DD(LSI)}$(3)	LSI oscillator power consumption	-	0.4	0.6	µA

1. V_{DD} = 3 V, T_A = –40 to 105 °C unless otherwise specified.
2. Guaranteed based on test during characterization..
3. Guaranteed by design.

Figure 28. ACC_{LSI} versus temperature

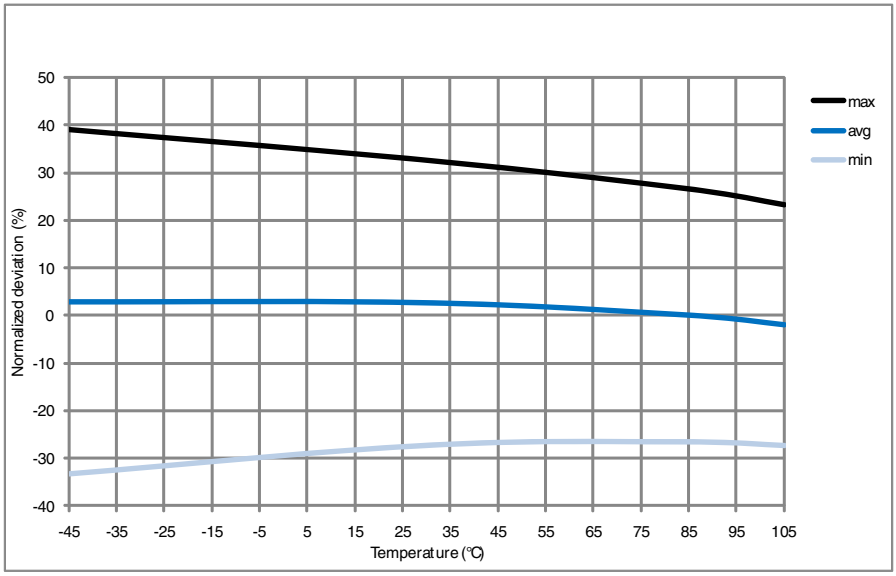

MS19013V1

6.3.11 PLL characteristics

The parameters given in *Table 43* and *Table 44* are derived from tests performed under temperature and V_{DD} supply voltage conditions summarized in *Table 16*.

Table 43. Main PLL characteristics

Symbol	Parameter	Conditions	Min	Typ	Max	Unit
f_{PLL_IN}	PLL input clock(1)	-	0.95(2)	1	2.10	MHz
f_{PLL_OUT}	PLL multiplier output clock	-	12.5	-	180	MHz
f_{PLL48_OUT}	48 MHz PLL multiplier output clock	-	-	48	75	MHz
f_{VCO_OUT}	PLL VCO output	-	100	-	432	MHz

Table 43. Main PLL characteristics (continued)

Symbol	Parameter	Conditions		Min	Typ	Max	Unit
t_{LOCK}	PLL lock time	VCO freq = 100 MHz		75	-	200	µs
		VCO freq = 432 MHz		100	-	300	
Jitter(3)	Cycle-to-cycle jitter	System clock 120 MHz	RMS	-	25	-	ps
			peak to peak	-	±150	-	
	Period Jitter		RMS	-	15	-	
			peak to peak	-	±200	-	
	Bit Time CAN jitter	Cycle to cycle at 1 MHz on 1000 samples		-	330	-	
$I_{DD(PLL)}$(4)	PLL power consumption on VDD	VCO freq = 100 MHz VCO freq = 432 MHz		0.15 0.45	-	0.40 0.75	mA
$I_{DDA(PLL)}$(4)	PLL power consumption on VDDA	VCO freq = 100 MHz VCO freq = 432 MHz		0.30 0.55	-	0.40 0.85	mA

1. Take care of using the appropriate division factor M to obtain the specified PLL input clock values. The M factor is shared between PLL and PLLI2S.
2. Guaranteed by design.
3. The use of 2 PLLs in parallel could degraded the Jitter up to +30%.
4. Guaranteed based on test during characterization.

Table 44. PLLI2S (audio PLL) characteristics

Symbol	Parameter	Conditions		Min	Typ	Max	Unit
f_{PLLI2S_IN}	PLLI2S input clock(1)	-		0.95(2)	1	2.10	MHz
f_{PLLI2S_OUT}	PLLI2S multiplier output clock	-		-	-	216	MHz
f_{VCO_OUT}	PLLI2S VCO output	-		100	-	432	MHz
t_{LOCK}	PLLI2S lock time	VCO freq = 100 MHz		75	-	200	µs
		VCO freq = 432 MHz		100	-	300	
Jitter(3)	Master I2S clock jitter	Cycle to cycle at 12.288 MHz on 48KHz period, N=432, R=5	RMS	-	90	-	-
			peak to peak	-	±280	-	ps
		Average frequency of 12.288 MHz N = 432, R = 5 on 1000 samples		-	90	-	ps
	WS I2S clock jitter	Cycle to cycle at 48 KHz on 1000 samples		-	400	-	ps

Table 44. PLLI2S (audio PLL) characteristics (continued)

Symbol	Parameter	Conditions	Min	Typ	Max	Unit
$I_{DD(PLLI2S)}$(4)	PLLI2S power consumption on V_{DD}	VCO freq = 100 MHz VCO freq = 432 MHz	0.15 0.45	-	0.40 0.75	mA
$I_{DDA(PLLI2S)}$(4)	PLLI2S power consumption on V_{DDA}	VCO freq = 100 MHz VCO freq = 432 MHz	0.30 0.55	-	0.40 0.85	mA

1. Take care of using the appropriate division factor M to have the specified PLL input clock values.
2. Guaranteed by design.
3. Value given with main PLL running.
4. Guaranteed based on test during characterization.

Table 45. PLLISAI characteristics

Symbol	Parameter	Conditions		Min	Typ	Max	Unit
f_{PLLSAI_IN}	PLLSAI input clock(1)	-		0.95(2)	1	2.10	MHz
f_{PLLSAI_OUT}	PLLSAI multiplier output clock	-		-	-	216	MHz
f_{VCO_OUT}	PLLSAI VCO output	-		100	-	432	MHz
t_{LOCK}	PLLSAI lock time	VCO freq = 100 MHz		75	-	200	µs
		VCO freq = 432 MHz		100	-	300	
Jitter(3)	Main SAI clock jitter	Cycle to cycle at 12.288 MHz on 48KHz period, N=432, R=5	RMS	-	90	-	-
			peak to peak	-	±280	-	ps
		Average frequency of 12.288 MHz N = 432, R = 5 on 1000 samples		-	90	-	ps
	FS clock jitter	Cycle to cycle at 48 KHz on 1000 samples		-	400	-	ps
$I_{DD(PLLSAI)}$(4)	PLLSAI power consumption on V_{DD}	VCO freq = 100 MHz VCO freq = 432 MHz		0.15 0.45	-	0.40 0.75	mA
$I_{DDA(PLLSAI)}$(4)	PLLSAI power consumption on V_{DDA}	VCO freq = 100 MHz VCO freq = 432 MHz		0.30 0.55	-	0.40 0.85	mA

1. Take care of using the appropriate division factor M to have the specified PLL input clock values.
2. Guaranteed by design.
3. Value given with main PLL running.
4. Guaranteed based on test during characterization.

6.3.12 PLL spread spectrum clock generation (SSCG) characteristics

The spread spectrum clock generation (SSCG) feature allows to reduce electromagnetic interferences (see *Table 52: EMI characteristics*). It is available only on the main PLL.

Table 46. SSCG parameters constraint

Symbol	Parameter	Min	Typ	Max(1)	Unit
f_{Mod}	Modulation frequency	-	-	10	KHz
md	Peak modulation depth	0.25	-	2	%
MODEPER * INCSTEP	-	-	-	$2^{15}-1$	-

1. Guaranteed by design.

Equation 1

The frequency modulation period (MODEPER) is given by the equation below:

$$MODEPER = round[f_{PLL_IN} / (4 \times f_{Mod})]$$

f_{PLL_IN} and f_{Mod} must be expressed in Hz.

As an example:

If f_{PLL_IN} = 1 MHz, and f_{MOD} = 1 kHz, the modulation depth (MODEPER) is given by equation 1:

$$MODEPER = round[10^6 / (4 \times 10^3)] = 250$$

Equation 2

Equation 2 allows to calculate the increment step (INCSTEP):

$$INCSTEP = round[((2^{15} - 1) \times md \times PLLN) / (100 \times 5 \times MODEPER)]$$

f_{VCO_OUT} must be expressed in MHz.

With a modulation depth (md) = ±2 % (4 % peak to peak), and PLLN = 240 (in MHz):

$$INCSTEP = round[((2^{15} - 1) \times 2 \times 240) / (100 \times 5 \times 250)] = 126 md(quantitazed)\%$$

An amplitude quantization error may be generated because the linear modulation profile is obtained by taking the quantized values (rounded to the nearest integer) of MODPER and INCSTEP. As a result, the achieved modulation depth is quantized. The percentage quantized modulation depth is given by the following formula:

$$md_{quantized}\% = (MODEPER \times INCSTEP \times 100 \times 5) / ((2^{15} - 1) \times PLLN)$$

As a result:

$$md_{quantized}\% = (250 \times 126 \times 100 \times 5) / ((2^{15} - 1) \times 240) = 2.002\%(peak)$$

Figure 29 and *Figure 30* show the main PLL output clock waveforms in center spread and down spread modes, where:

F0 is f_{PLL_OUT} nominal.

T_{mode} is the modulation period.

md is the modulation depth.

Figure 29. PLL output clock waveforms in center spread mode

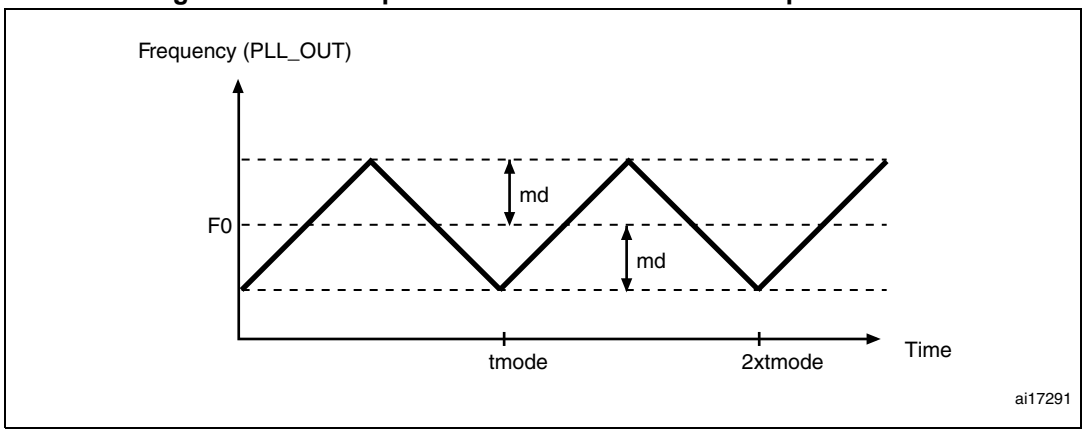

Figure 30. PLL output clock waveforms in down spread mode

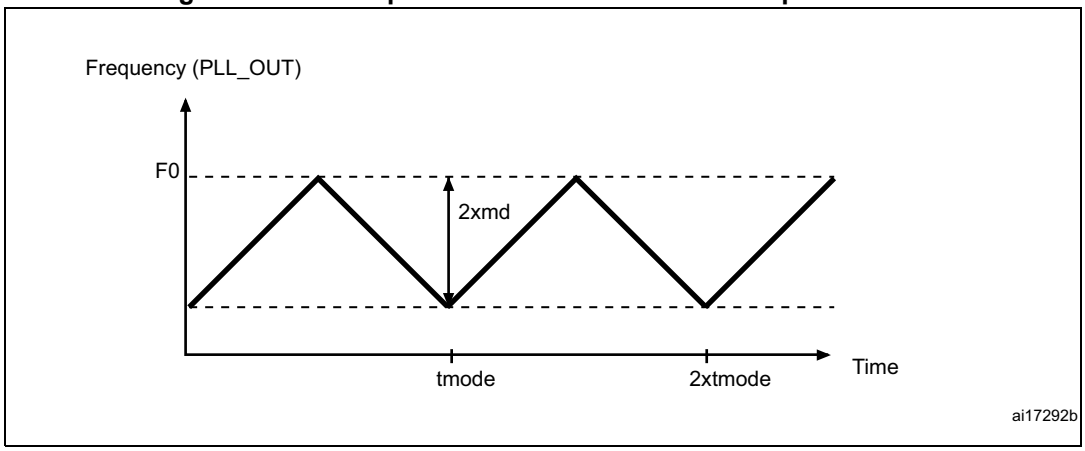

6.3.13 Memory characteristics

Flash memory

The characteristics are given at TA = - 40 to 105 °C unless otherwise specified.

The devices are shipped to customers with the Flash memory erased.

Table 47. Flash memory characteristics

Symbol	Parameter	Conditions	Min	Typ	Max	Unit
I_{DD}	Supply current	Write / Erase 8-bit mode, V_{DD} = 1.7 V	-	5	-	mA
		Write / Erase 16-bit mode, V_{DD} = 2.1 V	-	8	-	
		Write / Erase 32-bit mode, V_{DD} = 3.3 V	-	12	-	

Table 48. Flash memory programming

Symbol	Parameter	Conditions	Min(1)	Typ	Max(1)	Unit
t_{prog}	Word programming time	Program/erase parallelism (PSIZE) = x 8/16/32	-	16	100(2)	µs
$t_{ERASE16KB}$	Sector (16 KB) erase time	Program/erase parallelism (PSIZE) = x 8	-	400	800	ms
		Program/erase parallelism (PSIZE) = x 16	-	300	600	
		Program/erase parallelism (PSIZE) = x 32	-	250	500	
$t_{ERASE64KB}$	Sector (64 KB) erase time	Program/erase parallelism (PSIZE) = x 8	-	1200	2400	ms
		Program/erase parallelism (PSIZE) = x 16	-	700	1400	
		Program/erase parallelism (PSIZE) = x 32	-	550	1100	
$t_{ERASE128KB}$	Sector (128 KB) erase time	Program/erase parallelism (PSIZE) = x 8	-	2	4	s
		Program/erase parallelism (PSIZE) = x 16	-	1.3	2.6	
		Program/erase parallelism (PSIZE) = x 32	-	1	2	
t_{ME}	Mass erase time	Program/erase parallelism (PSIZE) = x 8	-	8	16	s
		Program/erase parallelism (PSIZE) = x 16	-	5.5	11	
		Program/erase parallelism (PSIZE) = x 32	-	8	16	
V_{prog}	Programming voltage	32-bit program operation	2.7	-	3.6	V
		16-bit program operation	2.1	-	3.6	V
		8-bit program operation	1.7	-	3.6	V

1. Guaranteed based on test during characterization.
2. The maximum programming time is measured after 100K erase operations.

Table 49. Flash memory programming with V_{PP}

Symbol	Parameter	Conditions	Min(1)	Typ	Max(1)	Unit
t_{prog}	Double word programming	T_A = 0 to +40 °C V_{DD} = 3.3 V V_{PP} = 8.5 V	-	16	100(2)	µs
$t_{ERASE16KB}$	Sector (16 KB) erase time		-	230	-	ms
$t_{ERASE64KB}$	Sector (64 KB) erase time		-	490	-	
$t_{ERASE128KB}$	Sector (128 KB) erase time		-	875	-	
t_{ME}	Mass erase time		-	3.5	-	s
V_{prog}	Programming voltage	-	2.7	-	3.6	V

Table 49. Flash memory programming with V_{PP} (continued)

Symbol	Parameter	Conditions	Min(1)	Typ	Max(1)	Unit
V_{PP}	V_{PP} voltage range	-	7	-	9	V
I_{PP}	Minimum current sunk on the V_{PP} pin	-	10	-	-	mA
t_{VPP}(3)	Cumulative time during which V_{PP} is applied	-	-	-	1	hour

1. Guaranteed by design.
2. The maximum programming time is measured after 100K erase operations.
3. V_{PP} should only be connected during programming/erasing.

Table 50. Flash memory endurance and data retention

Symbol	Parameter	Conditions	Value	Unit
-	-		Min(1)	
N_{END}	Endurance	T_A = –40 to +85 °C (6 suffix versions) T_A = –40 to +105 °C (7 suffix versions)	10	Kcycles
t_{RET}	Data retention	1 kcycle(2) at T_A = 85 °C	30	Years
		1 kcycle(2) at T_A = 105 °C	10	
		10 kcycles(2) at T_A = 55 °C	20	

1. Guaranteed based on test during characterization.
2. Cycling performed over the whole temperature range.

6.3.14 EMC characteristics

Susceptibility tests are performed on a sample basis during device characterization.

Functional EMS (electromagnetic susceptibility)

While a simple application is executed on the device (toggling 2 LEDs through I/O ports). the device is stressed by two electromagnetic events until a failure occurs. The failure is indicated by the LEDs:

- **Electrostatic discharge (ESD)** (positive and negative) is applied to all device pins until a functional disturbance occurs. This test is compliant with the IEC 61000-4-2 standard.
- **FTB**: A burst of fast transient voltage (positive and negative) is applied to V_{DD} and V_{SS} through a 100 pF capacitor, until a functional disturbance occurs. This test is compliant with the IEC 61000-4-4 standard.

A device reset allows normal operations to be resumed.

The test results are given in *Table 51*. They are based on the EMS levels and classes defined in application note AN1709.

Table 51. EMS characteristics

Symbol	Parameter	Conditions	Level/ Class
V_{FESD}	Voltage limits to be applied on any I/O pin to induce a functional disturbance	V_{DD} = 3.3 V, LQFP144, T_A = +25 °C, f_{HCLK} = 168 MHz, conforms to IEC 61000-4-2	2B
V_{EFTB}	Fast transient voltage burst limits to be applied through 100 pF on V_{DD} and V_{SS} pins to induce a functional disturbance	V_{DD} = 3.3 V, LQFP144, T_A = +25 °C, f_{HCLK} = 168 MHz, conforms to IEC 61000-4-2	4B

Designing hardened software to avoid noise problems

EMC characterization and optimization are performed at component level with a typical application environment and simplified MCU software. It should be noted that good EMC performance is highly dependent on the user application and the software in particular.

Therefore it is recommended that the user applies EMC software optimization and prequalification tests in relation with the EMC level requested for his application.

Software recommendations

The software flowchart must include the management of runaway conditions such as:

- Corrupted program counter
- Unexpected reset
- Critical Data corruption (control registers...)

Prequalification trials

Most of the common failures (unexpected reset and program counter corruption) can be reproduced by manually forcing a low state on the NRST pin or the Oscillator pins for 1 second.

To complete these trials, ESD stress can be applied directly on the device, over the range of specification values. When unexpected behavior is detected, the software can be hardened to prevent unrecoverable errors occurring (see application note AN1015).

Electromagnetic Interference (EMI)

The electromagnetic field emitted by the device are monitored while a simple application, executing EEMBC code, is running. This emission test is compliant with SAE IEC61967-2 standard which specifies the test board and the pin loading.

Table 52. EMI characteristics

Symbol	Parameter	Conditions	Monitored frequency band	Max vs. [f_{HSE}/f_{CPU}] 8/180 MHz	Unit
S_{EMI}	Peak level	V_{DD} = 3.3 V, T_A = 25 °C, LQFP144 package, conforming to SAE J1752/3 EEMBC, ART ON, all peripheral clocks enabled, clock dithering disabled.	0.1 to 30 MHz	11	dBµV
			30 to 130 MHz	10	
			130 MHz to 1GHz	11	
			SAE EMI Level	3	-
		V_{DD} = 3.3 V, T_A = 25 °C, LQFP144 package, conforming to SAE J1752/3 EEMBC, ART ON, all peripheral clocks enabled, clock dithering enabled	0.1 to 30 MHz	24	dBµV
			30 to 130 MHz	25	
			130 MHz to 1GHz	20	
			SAE EMI level	4	-

6.3.15 Absolute maximum ratings (electrical sensitivity)

Based on three different tests (ESD, LU) using specific measurement methods, the device is stressed in order to determine its performance in terms of electrical sensitivity.

Electrostatic discharge (ESD)

Electrostatic discharges (a positive then a negative pulse separated by 1 second) are applied to the pins of each sample according to each pin combination. The sample size depends on the number of supply pins in the device (3 parts × (n+1) supply pins). This test conforms to the ANSI/JEDEC standard.

Table 53. ESD absolute maximum ratings

Symbol	Ratings	Conditions	Class	Maximum value(1)	Unit
$V_{ESD(HBM)}$	Electrostatic discharge voltage (human body model)	T_A = + 25 °C conforming to ANSI/JEDEC JS-001	2	2000	V
$V_{ESD(CDM)}$	Electrostatic discharge voltage (charge device model)	T_A = + 25 °C conforming to ANSI/ESD STM5.3.1, LQFP64, LQFP100, WLCSP81 packages	C4	500	
		T_A = + 25 °C conforming to ANSI/ESD STM5.3.1, LQFP144, UFBGA144 (7 x 7), UFBGA144 (10 x 10) packages	C3	250	

1. Guaranteed based on test during characterization.

Static latchup

Two complementary static tests are required on six parts to assess the latchup performance:

- A supply overvoltage is applied to each power supply pin
- A current injection is applied to each input, output and configurable I/O pin

These tests are compliant with EIA/JESD 78A IC latchup standard.

Table 54. Electrical sensitivities

Symbol	Parameter	Conditions	Class
LU	Static latch-up class	T_A = +105 °C conforming to JESD78A	II level A

6.3.16 I/O current injection characteristics

As a general rule, current injection to the I/O pins, due to external voltage below V_{SS} or above V_{DD} (for standard, 3 V-capable I/O pins) should be avoided during normal product operation. However, in order to give an indication of the robustness of the microcontroller in cases when abnormal injection accidentally happens, susceptibility tests are performed on a sample basis during device characterization.

Functional susceptibility to I/O current injection

While a simple application is executed on the device, the device is stressed by injecting current into the I/O pins programmed in floating input mode. While current is injected into the I/O pin, one at a time, the device is checked for functional failures.

The failure is indicated by an out of range parameter: ADC error above a certain limit (>5 LSB TUE), out of conventional limits of induced leakage current on adjacent pins (out of –5 µA/+0 µA range), or other functional failure (for example reset, oscillator frequency deviation).

Negative induced leakage current is caused by negative injection and positive induced leakage current by positive injection.

The test results are given in *Table 55*.

Table 55. I/O current injection susceptibility(1)

Symbol	Description	Functional susceptibility		Unit
		Negative injection	Positive injection	
I_{INJ}	Injected current on BOOT0 pin	–0	NA	mA
	Injected current on NRST pin	–0	NA	
	Injected current on PE2, PE3,PE4, PE5, PE6, PC13, PC14, PF10, PH0, PH1, NRST, PC0, PC1, PC2, PC3, PG15, PB3, PB4, PB5, PB6, PB7, PB8, PB9, PE0, PE1	–0	NA	
	Injected current on any other FT and FTf pins	-5	NA	
	Injected current on any other pins	–5	+5	

1. NA = not applicable.

Note: It is recommended to add a Schottky diode (pin to ground) to analog pins which may potentially inject negative currents.

6.3.17 I/O port characteristics

General input/output characteristics

Unless otherwise specified, the parameters given in *Table 56: I/O static characteristics* are derived from tests performed under the conditions summarized in *Table 16*. All I/Os are CMOS and TTL compliant.

Table 56. I/O static characteristics

Symbol	Parameter	Conditions	Min	Typ	Max	Unit
V_{IL}	FT, FTf, TTa and NRST I/O input low level voltage	1.7 V≤V_{DD}≤3.6 V	-	-	$0.35V_{DD}$–0.04(1) $0.3V_{DD}$(2)	V
	BOOT0 I/O input low level voltage	1.75 V ≤ V_{DD} ≤ 3.6 V, – 40 °C≤ T_A ≤ 105 °C	-	-	$0.1V_{DD}$+0.1(1)	
		1.7 V ≤ V_{DD} ≤ 3.6 V, 0 °C ≤ T_A ≤105 °C	-	-		
V_{IH}	FT, FTf, TTa and NRST I/O input high level voltage(4)	1.7 V≤V_{DD}≤3.6 V	$0.45V_{DD}$+0.3(1) $0.7V_{DD}$(2)	-	-	V
	BOOT0 I/O input high level voltage	1.75 V≤V_{DD} ≤3.6 V, – 40 °C≤T_A ≤105 °C	$0.17V_{DD}$+0.7(1)	-	-	
		1.7 V≤V_{DD} ≤3.6 V, 0 °C≤T_A ≤105 °C				
V_{HYS}	FT, FTf, TTa and NRST I/O input hysteresis	1.7 V≤V_{DD}≤3.6 V	-	10%V_{DD}	-	V
	BOOT0 I/O input hysteresis	1.75 V≤V_{DD} ≤3.6 V, –40 °C≤T_A ≤105 °C	-	100m	-	
		1.7 V≤V_{DD} ≤3.6 V, 0 °C≤T_A ≤105 °C	-		-	
I_{lkg}	I/O input leakage current (3)	V_{SS} ≤V_{IN} ≤V_{DD}	-	-	±1	µA
	I/O FT input leakage current (4)	V_{IN} = 5 V	-	-	3	

Table 56. I/O static characteristics (continued)

Symbol	Parameter		Conditions	Min	Typ	Max	Unit
R_{PU}	Weak pull-up equivalent resistor(5)	All pins except for PA10/PB12 (OTG_FS_ID, OTG_HS_ID)	$V_{IN} = V_{SS}$	30	40	50	kΩ
		PA10/PB12 (OTG_FS_ID, OTG_HS_ID)		7	10	14	
R_{PD}	Weak pull-down equivalent resistor(6)	All pins except for PA10/PB12 (OTG_FS_ID, OTG_HS_ID)	$V_{IN} = V_{DD}$	30	40	50	
		PA10/PB12 (OTG_FS_ID, OTG_HS_ID)		7	10	14	
C_{IO}(7)	I/O pin capacitance		-	-	5	-	pF

1. Guaranteed by design.
2. Tested in production.
3. Leakage could be higher than the maximum value, if negative current is injected on adjacent pins, Refer to *Table 55: I/O current injection susceptibility*
4. To sustain a voltage higher than VDD +0.3 V, the internal pull-up/pull-down resistors must be disabled. Leakage could be higher than the maximum value, if negative current is injected on adjacent pins.Refer to *Table 55: I/O current injection susceptibility*
5. Pull-up resistors are designed with a true resistance in series with a switchable PMOS. This PMOS contribution to the series resistance is minimum (~10% order).
6. Pull-down resistors are designed with a true resistance in series with a switchable NMOS. This NMOS contribution to the series resistance is minimum (~10% order).
7. Hysteresis voltage between Schmitt trigger switching levels. Guaranteed based on test during characterization.

All I/Os are CMOS and TTL compliant (no software configuration required). Their characteristics cover more than the strict CMOS-technology or TTL parameters. The coverage of these requirements for FT I/Os is shown in *Figure 31*.

Figure 31. FT I/O input characteristics

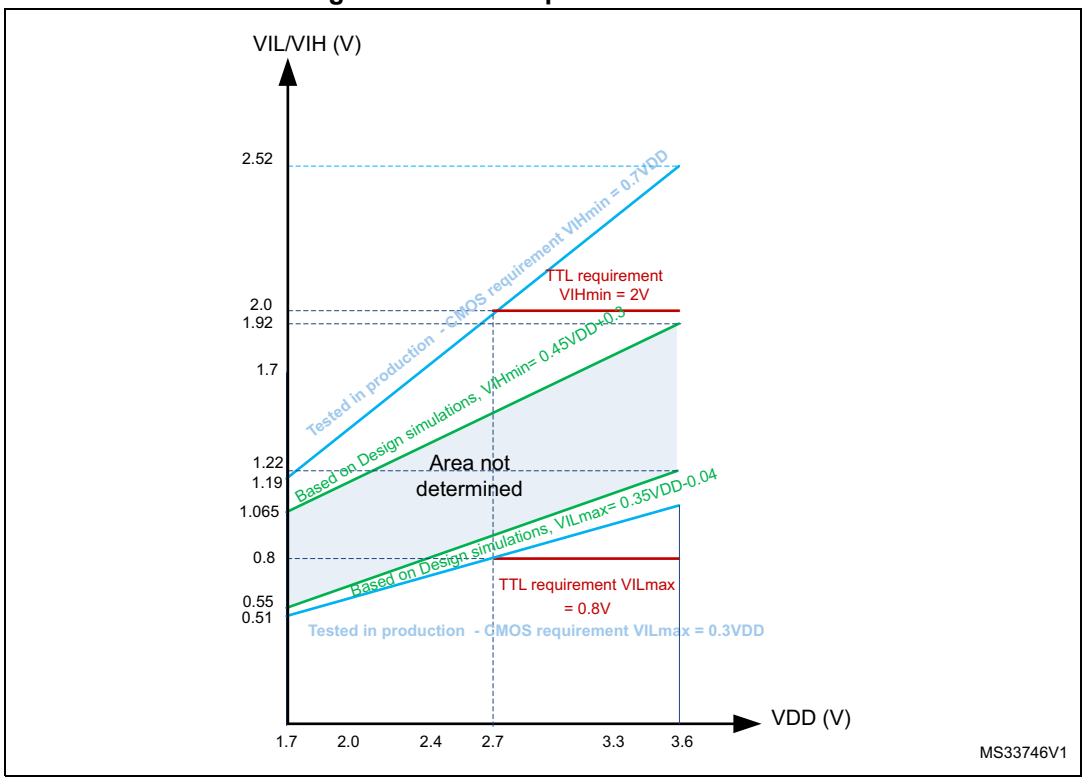

Output driving current

The GPIOs (general purpose input/outputs) can sink or source up to ±8 mA, and sink or source up to ±20 mA (with a relaxed V_{OL}/V_{OH}) except PC13, PC14 and PC15 which can sink or source up to ±3mA. When using the PC13 to PC15 GPIOs in output mode, the speed should not exceed 2 MHz with a maximum load of 30 pF.

In the user application, the number of I/O pins which can drive current must be limited to respect the absolute maximum rating specified in *Section 6.2*. In particular:

- The sum of the currents sourced by all the I/Os on $V_{DD,}$ plus the maximum Run consumption of the MCU sourced on $V_{DD,}$ cannot exceed the absolute maximum rating ΣI_{VDD} (see *Table 14*).
- The sum of the currents sunk by all the I/Os on V_{SS} plus the maximum Run consumption of the MCU sunk on V_{SS} cannot exceed the absolute maximum rating ΣI_{VSS} (see *Table 14*).

Output voltage levels

Unless otherwise specified, the parameters given in *Table 57* are derived from tests performed under ambient temperature and V_{DD} supply voltage conditions summarized in *Table 16*. All I/Os are CMOS and TTL compliant.

Table 57. Output voltage characteristics

Symbol	Parameter	Conditions	Min	Max	Unit
V_{OL}(1)	Output low level voltage for an I/O pin	CMOS port(2) I_{IO} = +8 mA 2.7 V ≤V_{DD} ≤3.6 V	-	0.4	V
V_{OH}(3)	Output high level voltage for an I/O pin		V_{DD}–0.4	-	
V_{OL} (1)	Output low level voltage for an I/O pin	TTL port(2) I_{IO} =+ 8mA 2.7 V ≤V_{DD} ≤3.6 V	-	0.4	V
V_{OH} (3)	Output high level voltage for an I/O pin		2.4	-	
V_{OL}(1)	Output low level voltage for an I/O pin	I_{IO} = +20 mA 2.7 V ≤V_{DD} ≤3.6 V	-	1.3(4)	V
V_{OH}(3)	Output high level voltage for an I/O pin		V_{DD}–1.3(4)	-	
V_{OL}(1)	Output low level voltage for an I/O pin	I_{IO} = +6 mA 1.8 V ≤V_{DD} ≤3.6 V	-	0.4(4)	V
V_{OH}(3)	Output high level voltage for an I/O pin		V_{DD}–0.4(4)	-	
V_{OL}(1)	Output low level voltage for an I/O pin	I_{IO} = +4 mA 1.7 V ≤V_{DD} ≤3.6V	-	0.4(5)	V
V_{OH}(3)	Output high level voltage for an I/O pin		V_{DD}–0.4(5)	-	

1. The I_{IO} current sunk by the device must always respect the absolute maximum rating specified in *Table 14*. and the sum of I_{IO} (I/O ports and control pins) must not exceed I_{VSS}.
2. TTL and CMOS outputs are compatible with JEDEC standards JESD36 and JESD52.
3. The I_{IO} current sourced by the device must always respect the absolute maximum rating specified in *Table 14* and the sum of I_{IO} (I/O ports and control pins) must not exceed I_{VDD}.
4. Based on characterization data.
5. Guaranteed by design.

Input/output AC characteristics

The definition and values of input/output AC characteristics are given in *Figure 32* and *Table 58*, respectively.

Unless otherwise specified, the parameters given in *Table 58* are derived from tests performed under the ambient temperature and V_{DD} supply voltage conditions summarized in *Table 16*.

Table 58. I/O AC characteristics(1)(2)

OSPEEDRy[1:0] bit value(1)	Symbol	Parameter	Conditions	Min	Typ	Max	Unit
00	$f_{max(IO)out}$	Maximum frequency(3)	C_L = 50 pF, V_{DD} ≥ 2.7 V	-	-	4	MHz
			C_L = 50 pF, V_{DD} ≥ 1.7 V	-	-	2	
			C_L = 10 pF, V_{DD} ≥ 2.7 V	-	-	8	
			C_L = 10 pF, V_{DD} ≥ 1.8 V	-	-	4	
			C_L = 10 pF, V_{DD} ≥ 1.7 V	-	-	3	
	$t_{f(IO)out}$/ $t_{r(IO)out}$	Output high to low level fall time and output low to high level rise time	C_L = 50 pF, V_{DD} = 1.7 V to 3.6 V	-	-	100	ns

Table 58. I/O AC characteristics(1)(2) (continued)

OSPEEDRy[1:0] bit value(1)	Symbol	Parameter	Conditions	Min	Typ	Max	Unit
01	$f_{max(IO)out}$	Maximum frequency(3)	C_L = 50 pF, V_{DD}≥ 2.7 V	-	-	25	MHz
			C_L = 50 pF, V_{DD}≥ 1.8 V	-	-	12.5	
			C_L = 50 pF, V_{DD}≥ 1.7 V	-	-	10	
			C_L = 10 pF, V_{DD} ≥ 2.7 V	-	-	50	
			C_L = 10 pF, V_{DD}≥ 1.8 V	-	-	20	
			C_L = 10 pF, V_{DD}≥ 1.7 V	-	-	12.5	
	$t_{f(IO)out}$/ $t_{r(IO)out}$	Output high to low level fall time and output low to high level rise time	C_L = 50 pF, V_{DD} ≥ 2.7 V	-	-	10	ns
			C_L = 10 pF, V_{DD} ≥ 2.7 V	-	-	6	
			C_L = 50 pF, V_{DD} ≥ 1.7 V	-	-	20	
			C_L = 10 pF, V_{DD} ≥ 1.7 V	-	-	10	
10	$f_{max(IO)out}$	Maximum frequency(3)	C_L = 40 pF, V_{DD} ≥ 2.7 V	-	-	50(4)	MHz
			C_L = 10 pF, V_{DD} ≥ 2.7 V	-	-	100(4)	
			C_L = 40 pF, V_{DD} ≥ 1.7 V	-	-	25	
			C_L = 10 pF, V_{DD} ≥ 1.8 V	-	-	50	
			C_L = 10 pF, V_{DD} ≥ 1.7 V	-	-	42.5	
	$t_{f(IO)out}$/ $t_{r(IO)out}$	Output high to low level fall time and output low to high level rise time	C_L = 40 pF, V_{DD} ≥2.7 V	-	-	6	ns
			C_L = 10 pF, V_{DD} ≥ 2.7 V	-	-	4	
			C_L = 40 pF, V_{DD} ≥ 1.7 V	-	-	10	
			C_L = 10 pF, V_{DD} ≥ 1.7 V	-	-	6	
11	$f_{max(IO)out}$	Maximum frequency(3)	C_L = 30 pF, V_{DD} ≥ 2.7 V	-	-	100(4)	MHz
			C_L = 30 pF, V_{DD} ≥ 1.8 V	-	-	50	
			C_L = 30 pF, V_{DD} ≥ 1.7 V	-	-	42.5	
			C_L = 10 pF, V_{DD}≥ 2.7 V	-	-	180(4)	
			C_L = 10 pF, V_{DD} ≥ 1.8 V	-	-	100	
			C_L = 10 pF, V_{DD} ≥ 1.7 V	-	-	72.5	
	$t_{f(IO)out}$/ $t_{r(IO)out}$	Output high to low level fall time and output low to high level rise time	C_L = 30 pF, V_{DD} ≥ 2.7 V	-	-	4	ns
			C_L = 30 pF, V_{DD} ≥1.8 V	-	-	6	
			C_L = 30 pF, V_{DD} ≥1.7 V	-	-	7	
			C_L = 10 pF, V_{DD} ≥ 2.7 V	-	-	2.5	
			C_L = 10 pF, V_{DD} ≥1.8 V	-	-	3.5	
			C_L = 10 pF, V_{DD} ≥1.7 V	-	-	4	
-	t_{EXTIpw}	Pulse width of external signals detected by the EXTI controller	-	10	-	-	ns

1. Guaranteed by design.
2. The I/O speed is configured using the OSPEEDRy[1:0] bits. Refer to the STM32F4xx reference manual for a description of the GPIOx_SPEEDR GPIO port output speed register.
3. The maximum frequency is defined in *Figure 32*.
4. For maximum frequencies above 50 MHz and V_{DD} > 2.4 V, the compensation cell should be used.

Figure 32. I/O AC characteristics definition

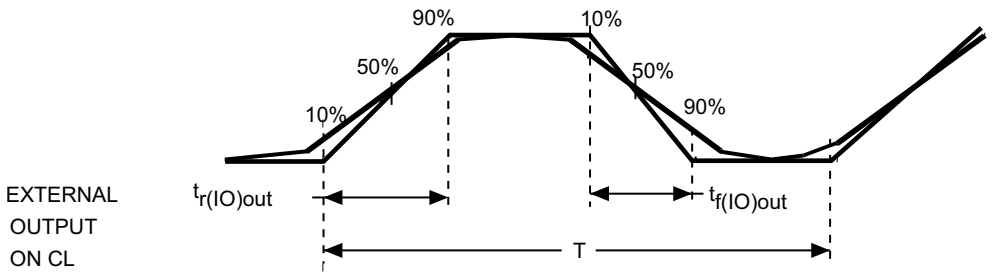

Maximum frequency is achieved if (t_r + t_f) ≤ (2/3)T and if the duty cycle is (45-55%) when loaded by CL specified in the table " *I/O AC characteristics*".

ai14131d

6.3.18 NRST pin characteristics

The NRST pin input driver uses CMOS technology. It is connected to a permanent pull-up resistor, R_{PU} (see *Table 56: I/O static characteristics*).

Unless otherwise specified, the parameters given in *Table 59* are derived from tests performed under the ambient temperature and V_{DD} supply voltage conditions summarized in *Table 16*.

Table 59. NRST pin characteristics

Symbol	Parameter	Conditions	Min	Typ	Max	Unit
R_{PU}	Weak pull-up equivalent resistor(1)	$V_{IN} = V_{SS}$	30	40	50	kΩ
$V_{F(NRST)}$(2)	NRST Input filtered pulse	-	-	-	100	ns
$V_{NF(NRST)}$(2)	NRST Input not filtered pulse	V_{DD} > 2.7 V	300	-	-	ns
T_{NRST_OUT}	Generated reset pulse duration	Internal Reset source	20	-	-	µs

1. The pull-up is designed with a true resistance in series with a switchable PMOS. This PMOS contribution to the series resistance must be minimum (~10% order).
2. Guaranteed by design.

Figure 33. Recommended NRST pin protection

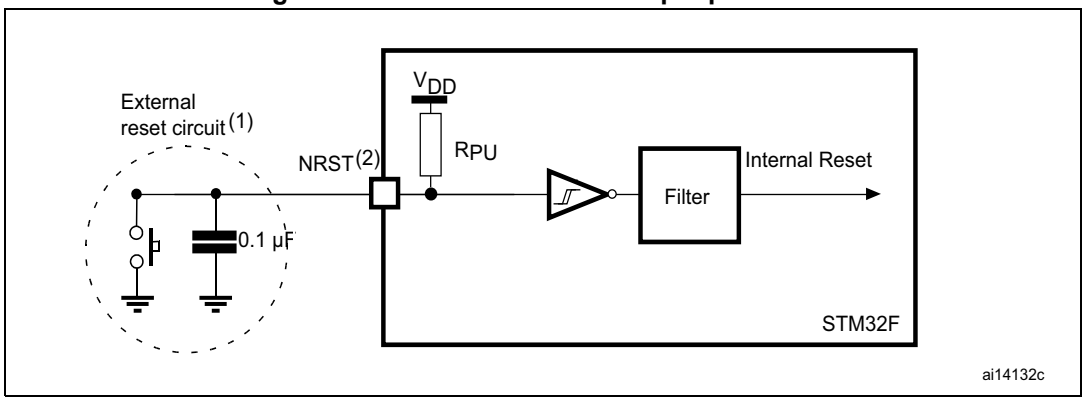

1. The reset network protects the device against parasitic resets.
2. The user must ensure that the level on the NRST pin can go below the $V_{IL(NRST)}$ max level specified in *Table 59*. Otherwise the reset is not taken into account by the device.
3. The external capacitor on NRST must be placed as close as possible to the device.

6.3.19 TIM timer characteristics

The parameters given in *Table 60* are guaranteed by design.

Refer to *Section 6.3.17: I/O port characteristics* for details on the input/output alternate function characteristics (output compare, input capture, external clock, PWM output).

Table 60. TIMx characteristics(1)(2)

Symbol	Parameter	Conditions(3)	Min	Max	Unit
$t_{res(TIM)}$	Timer resolution time	AHB/APBx prescaler=1 or 2 or 4, $f_{TIMxCLK}$ = 180 MHz	1	-	$t_{TIMxCLK}$
		AHB/APBx prescaler>4, $f_{TIMxCLK}$ = 90 MHz	1	-	$t_{TIMxCLK}$
f_{EXT}	Timer external clock frequency on CH1 to CH4	$f_{TIMxCLK}$ = 180 MHz	0	$f_{TIMxCLK}/2$	MHz
Res_{TIM}	Timer resolution		-	16/32	bit
t_{MAX_COUNT}	Maximum possible count with 32-bit counter	-	-	65536 × 65536	$t_{TIMxCLK}$

1. TIMx is used as a general term to refer to the TIM1 to TIM12 timers.
2. Guaranteed by design.
3. The maximum timer frequency on APB1 or APB2 is up to 180 MHz, by setting the TIMPRE bit in the RCC_DCKCFGR register, if APBx prescaler is 1 or 2 or 4, then TIMxCLK = HCKL, otherwise TIMxCLK = 4x PCLKx.

6.3.20 Communications interfaces

I²C interface characteristics

The I²C interface meets the requirements of the standard I²C communication protocol with the following restrictions: the I/O pins SDA and SCL too are mapped as not “true” open-drain. When configured as open-drain, the PMOS connected between the I/O pin and V_{DD} is disabled, but is still present.

The I^2C characteristics are described in *Table 61*. Refer also to *Section 6.3.17: I/O port characteristics* for more details on the input/output alternate function characteristics (SDA and SCL).

Table 61. I^2C characteristics

Symbol	Parameter	Standard mode I^2C(1)(2)		Fast mode I^2C(1)(2)		Unit
		Min	Max	Min	Max	
$t_{w(SCLL)}$	SCL clock low time	4.7	-	1.3	-	µs
$t_{w(SCLH)}$	SCL clock high time	4.0	-	0.6	-	µs
$t_{su(SDA)}$	SDA setup time	250	-	100	-	ns
$t_{h(SDA)}$	SDA data hold time	-	3450(3)	-	900(4)	ns
$t_{v(SDA, ACK)}$	Data, ACK valid time	-	3.45	-	0.9	ns
$t_{r(SDA)}$ $t_{r(SCL)}$	SDA and SCL rise time	-	1000	-	300	ns
$t_{f(SDA)}$ $t_{f(SCL)}$	SDA and SCL fall time	-	300	-	300	ns
$t_{h(STA)}$	Start condition hold time	4.0	-	0.6	-	µs
$t_{su(STA)}$	Repeated Start condition setup time	4.7	-	0.6	-	µs
$t_{su(STO)}$	Stop condition setup time	4.0	-	0.6	-	µs
$t_{w(STO:STA)}$	Stop to Start condition time (bus free)	4.7	-	1.3	-	µs
t_{SP}	Pulse width of the spikes that are suppressed by the analog filter for standard and fast mode	-	-	0.05	0.09(5)	µs
C_b	Capacitive load for each bus line	-	400	-	400	pF

1. Guaranteed based on test during characterization.
2. f_{PCLK1} must be at least 2 MHz to achieve standard mode I^2C frequencies. It must be at least 4 MHz to achieve fast mode I^2C frequencies, and a multiple of 10 MHz to reach the 400 kHz maximum I^2C fast mode clock.
3. The device must internally provide a hold time of at least 300 ns for the SDA signal in order to bridge the undefined region of the falling edge of SCL.
4. The maximum data hold time has only to be met if the interface does not stretch the low period of SCL signal.
5. The minimum width of the spikes filtered by the analog filter is above t_{SP}(max).

Figure 34. I²C bus AC waveforms and measurement circuit

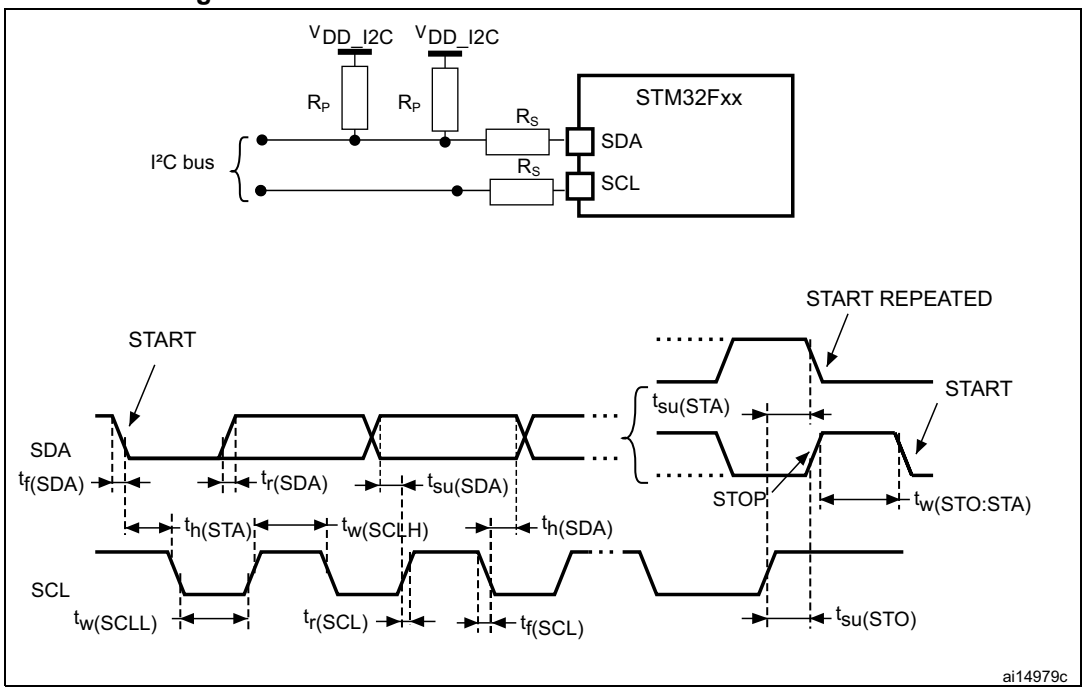

1. R_S = series protection resistor.
2. R_P = external pull-up resistor.
3. V_{DD_I2C} is the I2C bus power supply.

FMPI^{2}C characteristics

The FMPI2C characteristics are described in *Table 62*.

Refer also to *Section 6.3.17: I/O port characteristics* for more details on the input/output alternate function characteristics (SDA and SCL).

Table 62. FMPI^{2}C characteristics(1)

-	Parameter	Standard mode		Fast mode		Fast+ mode		Unit
		Min	Max	Min	Max	Min	Max	
$f_{FMPI2CC}$	$F_{MPI2CCLK}$ frequency	2	-	8	-	17 16(2)	-	us
$t_{w(SCLL)}$	SCL clock low time	4.7	-	1.3	-	0.5	-	
$t_{w(SCLH)}$	SCL clock high time	4.0	-	0.6	-	0.26	-	
$t_{su(SDA)}$	SDA setup time	0.25	-	0.10	-	0.05	-	
$t_{H(SDA)}$	SDA data hold time	0	-	0	-	0	-	
$t_{v(SDA,ACK)}$	Data, ACK valid time	-	3.45	-	0.9	-	0.45	
$t_{r(SDA)}$ $t_{r(SCL)}$	SDA and SCL rise time	-	0.100	-	0.30	-	0.12	
$t_{f(SDA)}$ $t_{f(SCL)}$	SDA and SCL fall time	-	0.30	-	0.30	-	0.12	
$t_{h(STA)}$	Start condition hold time	4	-	0.6	-	0.26	-	
$t_{su(STA)}$	Repeated Start condition setup time	4.7	-	0.6	-	0.26	-	
$t_{su(STO)}$	Stop condition setup time	4	-	0.6	-	0.26	-	
$t_{w(STO:STA)}$	Stop to Start condition time (bus free)	4.7	-	1.3	-	0.5	-	
t_{SP}	Pulse width of the spikes that are suppressed by the analog filter for standard and fast mode	-	-	0.05	0.09	0.05	0.09	
C_b	Capacitive load for each bus Line	-	400	-	400	-	550(3)	pF

1. Guaranteed based on test during characterization.
2. When tr(SDA,SCL)<=110ns.
3. Can be limited. Maximum supported value can be retrieved by referring to the following formulas:
   $t_{r(SDA/SCL)} = 0.8473 \times R_p \times C_{load}$
   $R_{p(min)} = (V_{DD} - V_{OL(max)}) / I_{OL(max)}$

Figure 35. FMPI^{2}C timing diagram and measurement circuit

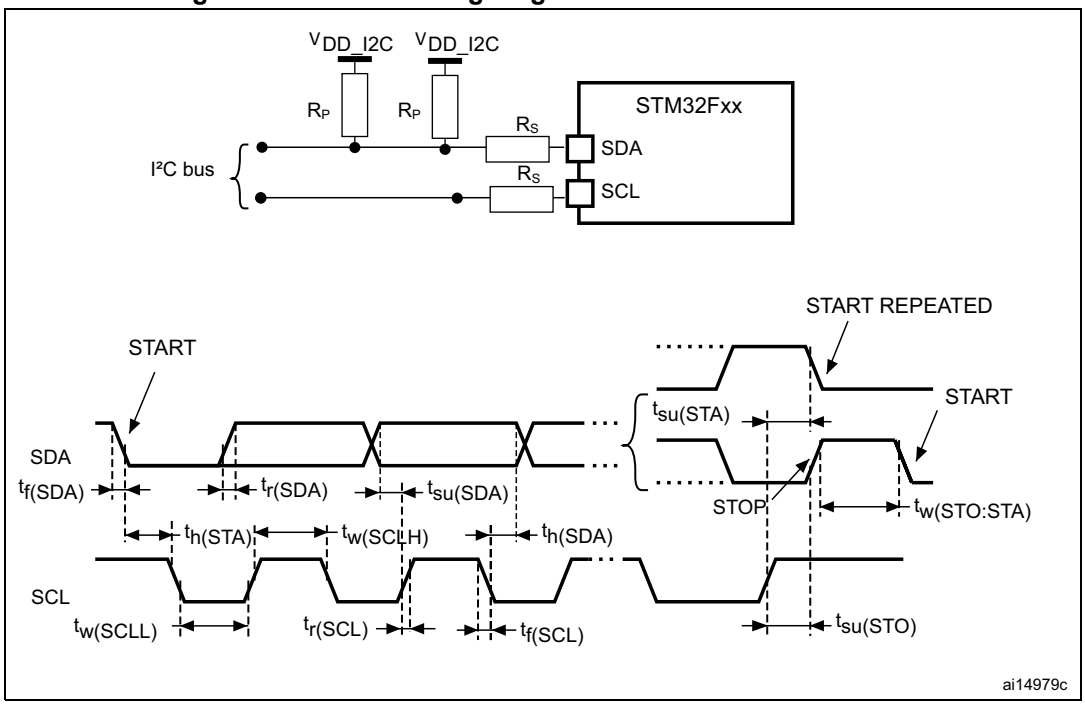

SPI interface characteristics

Unless otherwise specified, the parameters given in *Table 63* for SPI are derived from tests performed under the ambient temperature, fPCLKx frequency and VDD supply voltage conditions summarized in *Table 16*, with the following configuration:

- Output speed is set to OSPEEDRy[1:0] = 10
- Capacitive load C=30pF
- Measurement points are done at CMOS levels: 0.5VDD

Refer to *Section 6.3.17: I/O port characteristics* for more details on the input/output alternate function characteristics (NSS, SCK, MOSI, MISO for SPI).

Table 63. SPI dynamic characteristics(1)

Symbol	Parameter	Conditions	Min	Typ	Max	Unit
f_{SCK} $1/t_{c(SCK)}$	SPI clock frequency	Master full duplex/receiver mode, 2.7 V≤V_{DD}≤3.6 V SPI1/4	-	-	45	MHz
		Master transmitter 1.71V <V_{DD}< 3.6V SPI1/4			45	
		Master 1.71V <V_{DD}< 3.6V SPI1/2/3/4			22.5	
		Slave transmitter/ full duplex mode SPI1/4 2.7V <V_{DD}< 3.6V			45	
		Slave receiver mode SPI1/4 1.71V <V_{DD}< 3.6V			45	
		Slave mode SPI1/2/3/4 1.71V <V_{DD}< 3.6V			22.5(2)	
Duty(SCK)	Duty cycle of SPI clock frequency	Slave mode	30	50	70	%

Table 63. SPI dynamic characteristics(1) (continued)

Symbol	Parameter	Conditions	Min	Typ	Max	Unit
$t_{w(SCKH)}$	SCK high and low time	Master mode, SPI presc = 2	T_{PCLK} - 1.5	T_{PCLK}	T_{PCLK} + 1.5	ns
$t_{w(SCKL)}$						
$t_{su(NSS)}$	NSS setup time	Slave mode, SPI presc = 2	$4T_{PCLK}$	-	-	
$t_{h(NSS)}$	NSS hold time	Slave mode, SPI presc = 2	$2T_{PCLK}$			
$t_{su(MI)}$	Data input setup time	Master mode	4	-	-	
$t_{su(SI)}$		Slave mode	3	-	-	
$t_{h(MI)}$	Data input hold time	Master mode	4	-	-	
$t_{h(SI)}$		Slave mode	2	-	-	
$t_{a(SO)}$	Data output access time	Slave mode	7	-	21	
$t_{dis(SO)}$	Data output disable time	Slave mode	5	-	12	
$t_{v(SO)}$	Data output valid/hold time	Slave mode (after enable edge), 2.7V ≤ V_{DD} ≤ 3.6V	-	7.5	22	
		Slave mode (after enable edge), 1.7 V ≤ V_{DD} ≤ 3.6 V	-	7.5	10.5	
$t_{h(SO)}$	Data output valid/hold time	Slave mode (after enable edge)	5	-	-	
$t_{v(MO)}$	Data output valid time	Master mode (after enable edge)	-	1.5	5	
$t_{h(MO)}$	Data output hold time	Master mode (after enable edge)	0	-	-	

1. Guaranteed based on test during characterization.
2. Maximum frequency in Slave transmitter mode is determined by the sum of $t_{v(SO)}$ and $t_{su(MI)}$ which has to fit into SCK low or high phase preceding the SCK sampling edge. This value can be achieved when the SPI communicates with a master having $t_{su(MI)}$ = 0 while Duty(SCK) = 50%.

Figure 36. SPI timing diagram - slave mode and CPHA = 0

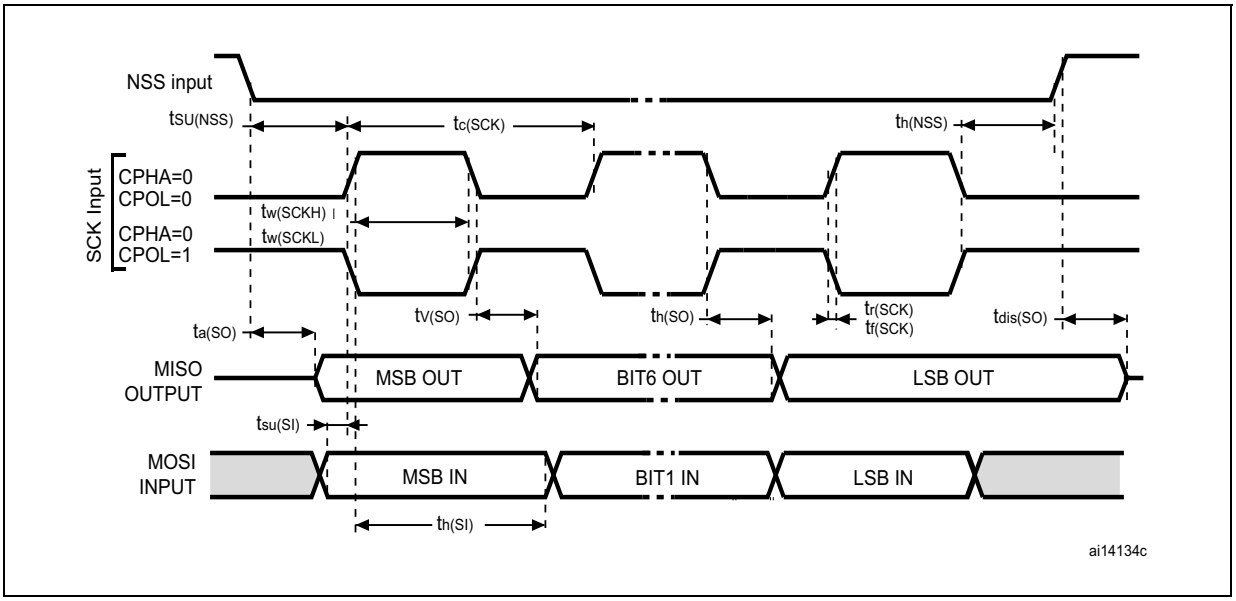

Figure 37. SPI timing diagram - slave mode and CPHA = 1

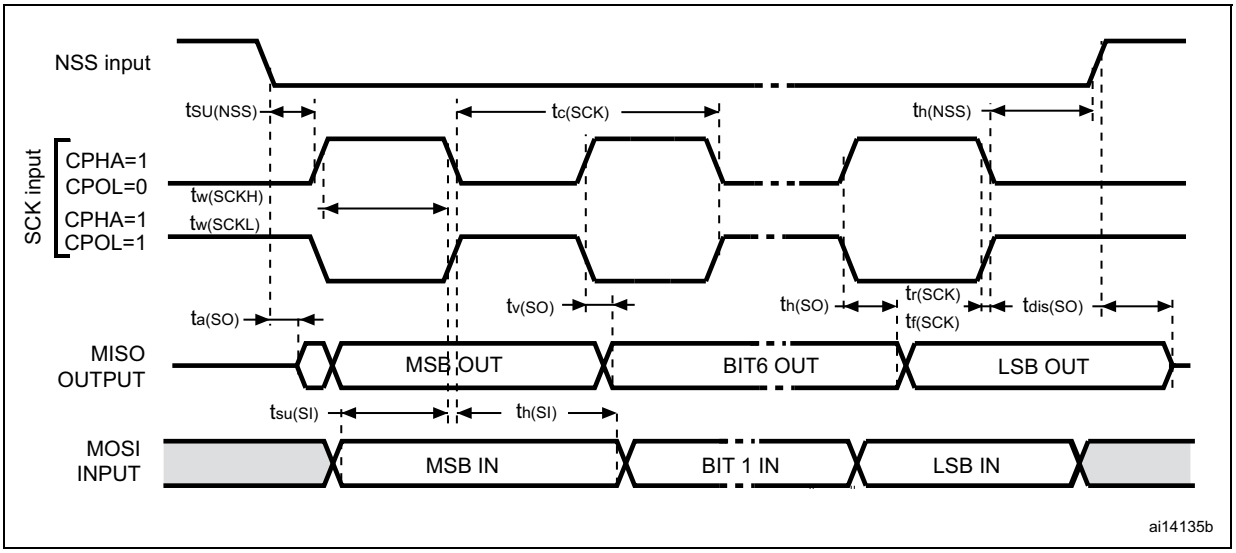

Figure 38. SPI timing diagram - master mode

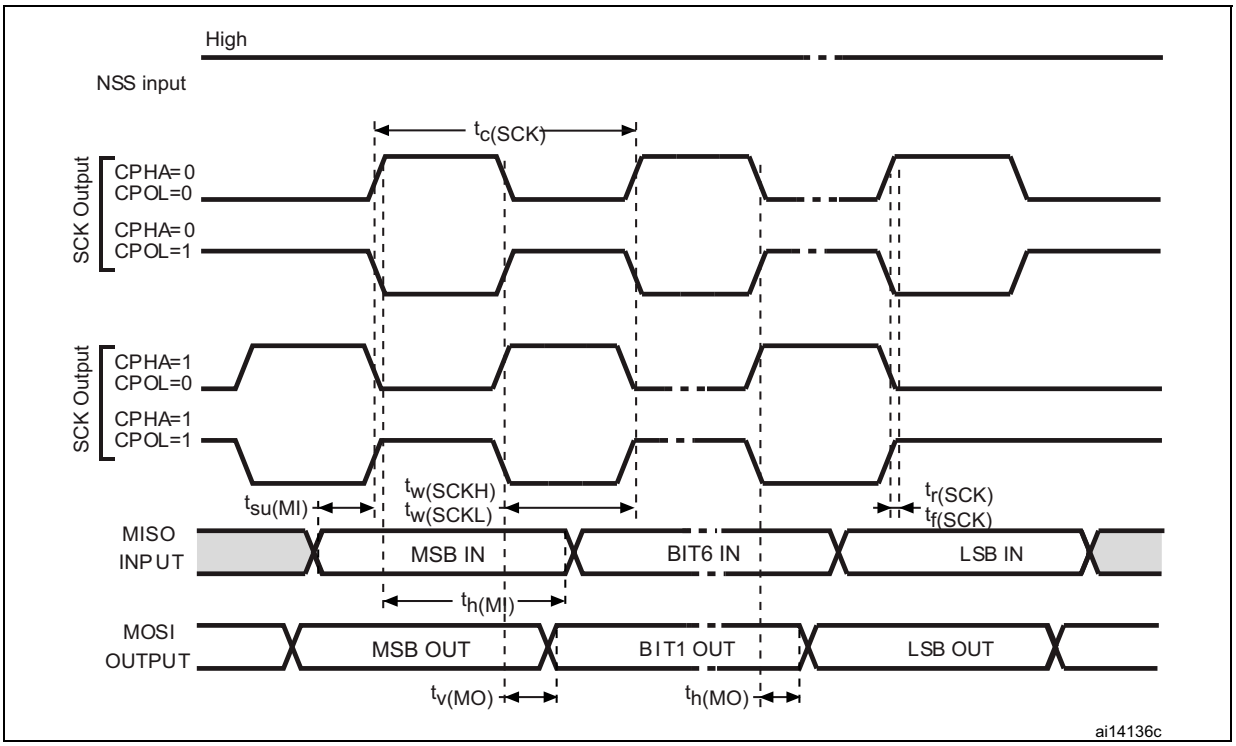

QSPI interface characteristics

Unless otherwise specified, the parameters given in *Table 64* for QSPI are derived from tests performed under the ambient temperature, f_{AHB} frequency and V_{DD} supply voltage conditions summarized in *Table 16*, with the following configuration:

- Output speed is set to OSPEEDRy[1:0] = 11
- Capacitive load C=20pF
- Measurement points are done at CMOS levels: 0.5VDD

Refer to *Section 6.3.17: I/O port characteristics* for more details on the input/output alternate function characteristics.

Table 64. QSPI dynamic characteristics in SDR Mode(1)

Symbol	Parameter	Conditions	Min	Typ	Max	Unit
f_{SCK} $1/t_{c(SCK)}$	QSPI clock frequency	Write mode 1.71 V≤V_{DD}≤3.6 V Cload = 15 pF	-	-	90	MHz
		Read mode 2.7V <VDD< 3.6V Cload = 15 pF	-	-	90	
		1.71 V≤V_{DD}≤3.6 V	-	-	48	
$t_{w(CKH)}$	QSPI clock high and low	-	$(T_{(CK)} / 2) - 2$	-	$T_{(CK)} / 2$	ns
$t_{w(CKL)}$			$T_{(CK)} / 2$	-	$(T_{(CK)} / 2) +2$	
$t_{s(IN)}$	Data input setup time	-	2	-	-	
$t_{h(IN)}$	Data input hold time	-	4.5	-	-	
$t_{v(OUT)}$	Data output valid time	-	-	1.5	3	
$t_{h(OUT)}$	Data output hold time	-	0	-	-	

1. Guaranteed based on test during characterization.

Table 65. QSPI dynamic characteristics in DDR Mode(1)

Symbol	Parameter	Conditions	Min	Typ	Max	Unit
f_{SCK} $1/t_{c(SCK)}$	QSPI clock frequency	Write mode 1.71 V≤V_{DD}≤3.6 V Cload = 15 pF	-	-	60	MHz
		Read mode 2.7V <VDD< 3.6V Cload = 15 pF	-	-	60	
		1.71 V≤V_{DD}≤3.6 V	-	-	48	

Table 65. QSPI dynamic characteristics in DDR Mode(1) (continued)

Symbol	Parameter	Conditions	Min	Typ	Max	Unit
$t_{w(CKH)}$	QSPI clock high and low	-	$(T_{(CK)} / 2) - 2$	-	$T_{(CK)} / 2$	ns
$t_{w(CKL)}$			$T_{(CK)} / 2$	-	$(T_{(CK)} / 2) +2$	
$t_{s(IN)}$	Data input setup time	-	0	-	-	
$t_{h(IN)}$	Data input hold time	-	5.5	-	-	
$t_{v(OUT)}$	Data output valid time	2.7V <VDD< 3.6V	-	5.5	6.5	
		1.71V <VDD< 3.6V	-	8	9.5	
$t_{h(OUT)}$	Data output hold time	-	3.5	-	-	

1. Guaranteed based on test during characterization.

I²S interface characteristics

Unless otherwise specified, the parameters given in *Table 66* for the I²S interface are derived from tests performed under the ambient temperature, f_{PCLKx} frequency and V_{DD} supply voltage conditions summarized in *Table 16*, with the following configuration:

- Output speed is set to OSPEEDRy[1:0] = 10
- Capacitive load C = 30 pF
- Measurement points are done at CMOS levels: $0.5V_{DD}$

Refer to *Section 6.3.17: I/O port characteristics* for more details on the input/output alternate function characteristics (CK, SD, WS).

Table 66. I²S dynamic characteristics(1)

Symbol	Parameter	Conditions	Min	Max	Unit
f_{MCK}	I2S Main clock output	-	256 x 8K	256 x Fs(2)	MHz
f_{CK}	I2S clock frequency	Master data	-	64 x Fs	MHz
		Slave data	-	64 x Fs	
D_{CK}	I2S clock frequency duty cycle	Slave receiver	30	70	%

Table 66. I²S dynamic characteristics(1) (continued)

Symbol	Parameter	Conditions	Min	Max	Unit
$t_{v(WS)}$	WS valid time	Master mode	-	5.5	ns
$t_{h(WS)}$	WS hold time	Master mode	1	-	
$t_{su(WS)}$	WS setup time	Slave mode	1	-	
-		PCM short pulse Slave mode(3)	2	-	
$t_{h(WS)}$	WS hold time	Slave mode	3	-	
-		PCM short pulse Slave mode(3)	1.5	-	
$t_{su(SD_MR)}$	Data input setup time	Master receiver	3	-	
$t_{su(SD_SR)}$		Slave receiver	2.5	-	
$t_{h(SD_MR)}$	Data input hold time	Master receiver	4	-	
$t_{h(SD_SR)}$		Slave receiver	1	-	
$t_{v(SD_ST)}$	Data output valid time	Slave transmitter (after enable edge)	-	16	
$t_{v(SD_MT)}$		Master transmitter (after enable edge)	-	4.5	
$t_{h(SD_ST)}$	Data output hold time	Slave transmitter (after enable edge)	5	-	
$t_{h(SD_MT)}$		Master transmitter (after enable edge)	1	-	

1. Guaranteed based on test during characterization.
2. The maximum value of 256xFs is 45 MHz (APB1 maximum frequency).
3. Measurement done with respect to I2S_CK rising edge.

Note: Refer to the I2S section of RM0390 reference manual for more details on the sampling frequency (F_S).

*f_{MCK}, f_{CK}, and D_{CK} values reflect only the digital peripheral behavior. The values of these parameters might be slightly impacted by the source clock precision. D_{CK} depends mainly on the value of ODD bit. The digital contribution leads to a minimum value of (I2SDIV/(2*I2SDIV+ODD) and a maximum value of (I2SDIV+ODD)/(2*I2SDIV+ODD). F_S maximum value is supported for each mode/condition.*

Figure 39. I²S slave timing diagram (Philips protocol)(1)

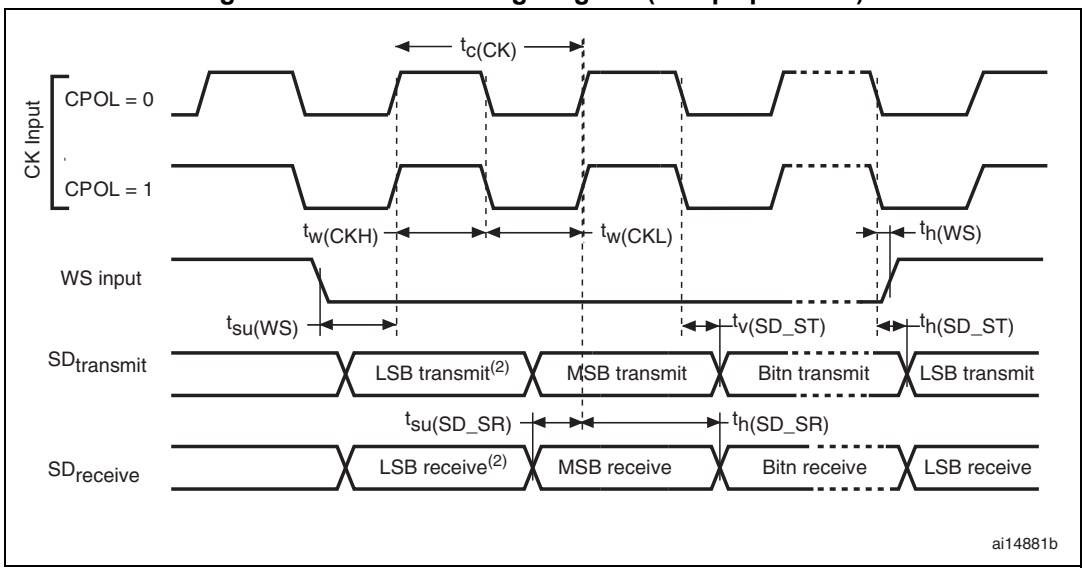

1. LSB transmit/receive of the previously transmitted byte. No LSB transmit/receive is sent before the first byte.

Figure 40. I²S master timing diagram (Philips protocol)(1)

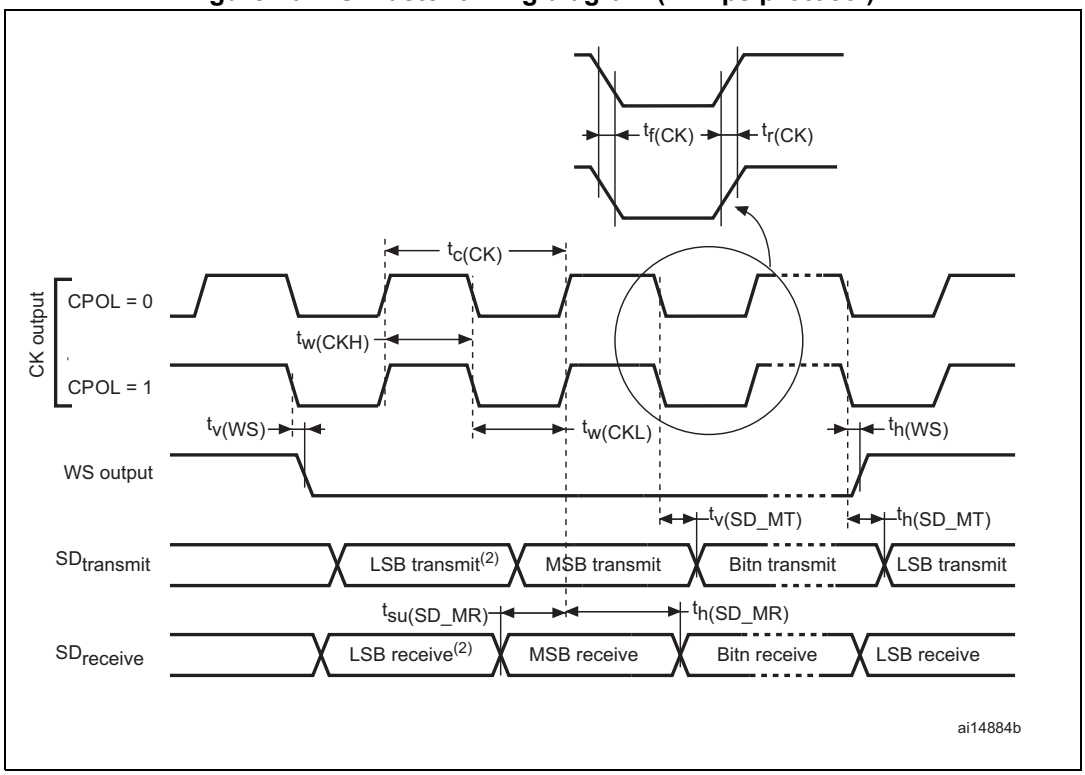

1. LSB transmit/receive of the previously transmitted byte. No LSB transmit/receive is sent before the first byte.

SAI characteristics

Unless otherwise specified, the parameters given in *Table 67* for SAI are derived from tests performed under the ambient temperature, f_{PCLKx} frequency and VDD supply voltage conditions summarized in *Table 16*, with the following configuration:

- Output speed is set to OSPEEDRy[1:0] = 10
- Capacitive load C=30 pF
- Measurement points are performed at CMOS levels: $0.5V_{DD}$

Refer to *Section 6.3.17: I/O port characteristics* for more details on the input/output alternate function characteristics (SCK,SD,WS).

Table 67. SAI characteristics(1)

Symbol	Parameter	Conditions	Min	Max	Unit
f_{MCK}	SAI Main clock output	-	256 x 8K	256 x Fs	MHz
f_{CK}	SAI clock frequency(2)	Master data: 32 bits	-	128 x Fs(3)	MHz
		Slave data: 32 bits	-	128 x Fs(3)	
$t_{v(FS)}$	FS valid time	Master mode 2.7 V ≤ V_{DD} ≤3.6 V	-	14	%
		Master mode 1.71 V ≤ V_{DD} ≤3.6 V	-	17.5	ns
$t_{h(FS)}$	FS hold time	Master mode	7	-	
$t_{su(FS)}$	FS setup time	Slave mode	1	-	
$t_{h(FS)}$	FS hold time	Slave mode	1	-	
$t_{su(SD_A_MR)}$	Data input setup time	Master receiver	1	-	
$t_{su(SD_B_SR)}$		Slave receiver	1	-	
$t_{h(SD_A_MR)}$	Data input hold time	Master receiver	5	-	
$t_{h(SD_B_SR)}$		Slave receiver	1	-	
$t_{v(SD_B_ST)}$	Data output valid time	Slave trasmitter (after enable edge 2.7 V ≤ V_{DD} ≤3.6 V	-	9.5	
		Slave transmitter (after enable edge 1.71 V ≤ V_{DD} ≤3.6 V	-	16	
$t_{h(SD_B_ST)}$	Data output hold time	Slave transmitter (after enable edge	6	-	
$t_{v(SD_B_ST)}$	Data output valid time	Master transmitter (after enable edge 2.7 V ≤ V_{DD} ≤3.6 V	-	15	
		Master transmitter (after enable edge 1.71 V ≤ V_{DD} ≤3.6 V	-	18	
$t_{h(SD_B_ST)}$	Data output hold time	Master transmitter (after enable edge	7	-	

1. Guaranteed based on test during characterization.
2. 256xFs maximum corresponds to 45 MHz (APB2 xaximum frequency)
3. With Fs = 192 KHz

Figure 41. SAI master timing waveforms

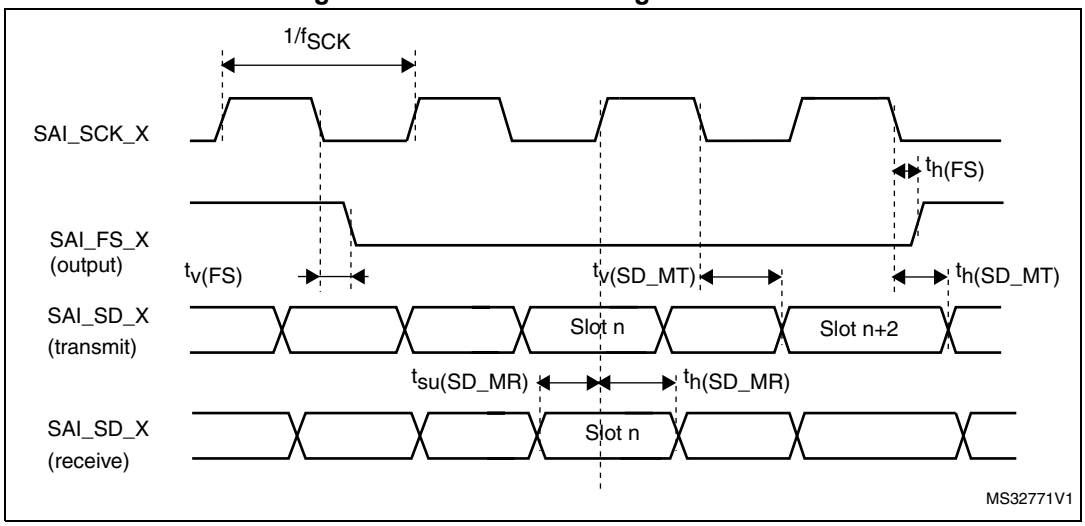

Figure 42. SAI slave timing waveforms

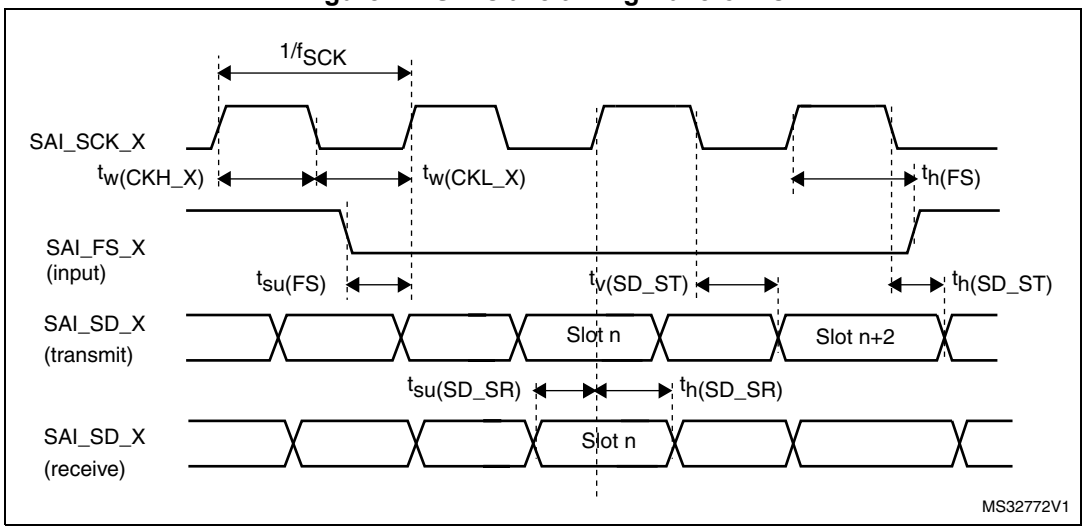

USB OTG full speed (FS) characteristics

This interface is present in both the USB OTG HS and USB OTG FS controllers.

Table 68. USB OTG full speed startup time

Symbol	Parameter	Max	Unit
$t_{STARTUP}$(1)	USB OTG full speed transceiver startup time	1	µs

1. Guaranteed by design.

Table 69. USB OTG full speed DC electrical characteristics

Symbol		Parameter	Conditions	Min.(1)	Typ.	Max.(1)	Unit
Input levels	V_{DDUSB}	USB OTG full speed transceiver operating voltage	-	3.0(2)	-	3.6	V
	V_{DI}(3)	Differential input sensitivity	I(USB_FS_DP/DM, USB_HS_DP/DM)	0.2	-	-	V
	V_{CM}(3)	Differential common mode range	Includes V_{DI} range	0.8	-	2.5	
	V_{SE}(3)	Single ended receiver threshold	-	1.3	-	2.0	
Output levels	V_{OL}	Static output level low	R_L of 1.5 kΩ to 3.6 V(4)	-	-	0.3	V
	V_{OH}	Static output level high	R_L of 15 kΩ to V_{SS}(4)	2.8	-	3.6	
R_{PD}		PA11, PA12, PB14, PB15 (USB_FS_DP/DM, USB_HS_DP/DM)	$V_{IN} = V_{DDUSB}$	17	21	24	kΩ
		PA9, PB13 (OTG_FS_VBUS, OTG_HS_VBUS)		0.65	1.1	2.0	
R_{PU}		PA12, PB15 (USB_FS_DP, USB_HS_DP)	$V_{IN} = V_{SS}$	1.5	1.8	2.1	
		PA9, PB13 (OTG_FS_VBUS, OTG_HS_VBUS)	$V_{IN} = V_{SS}$	0.25	0.37	0.55	

1. All the voltages are measured from the local ground potential.
2. The USB OTG full speed transceiver functionality is ensured down to 2.7 V but not the full USB full speed electrical characteristics which are degraded in the 2.7-to-3.0 V V_{DD} voltage range.
3. Guaranteed by design.
4. R_L is the load connected on the USB OTG full speed drivers.

Note: When VBUS sensing feature is enabled, PA9 and PB13 should be left at their default state (floating input), not as alternate function. A typical 200 µA current consumption of the sensing block (current to voltage conversion to determine the different sessions) can be observed on PA9 and PB13 when the feature is enabled.

Figure 43. USB OTG full speed timings: definition of data signal rise and fall time

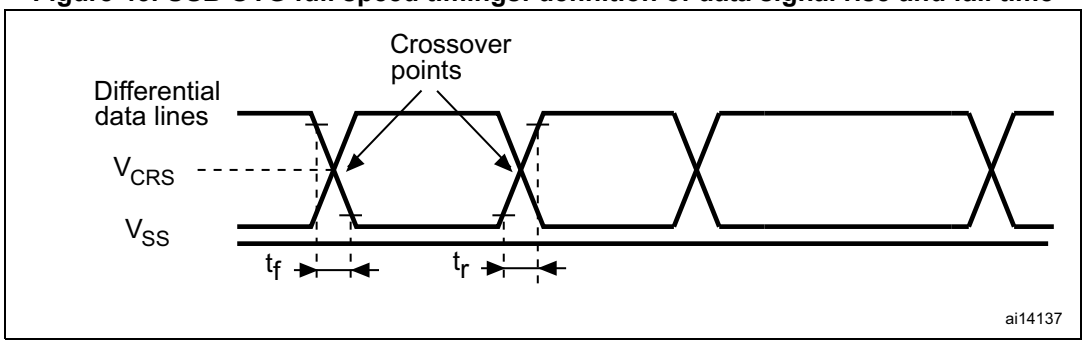

Table 70. USB OTG full speed electrical characteristics(1)

Driver characteristics					
Symbol	**Parameter**	**Conditions**	**Min**	**Max**	**Unit**
t_r	Rise time(2)	C_L = 50 pF	4	20	ns
t_f	Fall time(2)	C_L = 50 pF	4	20	ns
t_{rfm}	Rise/ fall time matching	t_r/t_f	90	110	%
V_{CRS}	Output signal crossover voltage	-	1.3	2.0	V
Z_{DRV}	Output driver impedance(3)	Driving high or low	28	44	Ω

1. Guaranteed by design.
2. Measured from 10% to 90% of the data signal. For more detailed informations, please refer to USB Specification - Chapter 7 (version 2.0).
3. No external termination series resistors are required on DP (D+) and DM (D-) pins since the matching impedance is included in the embedded driver.

USB high speed (HS) characteristics

Unless otherwise specified, the parameters given in *Table 73* for ULPI are derived from tests performed under the ambient temperature, f_{HCLK} frequency summarized in *Table 72* and V_{DD} supply voltage conditions summarized in *Table 71*, with the following configuration:

- Output speed is set to OSPEEDRy[1:0] = 10, unless otherwise specified
- Capacitive load C = 30 pF, unless otherwise specified
- Measurement points are done at CMOS levels: $0.5V_{DD}$.

Refer to *Section 6.3.17: I/O port characteristics* for more details on the input/output characteristics.

Table 71. USB HS DC electrical characteristics

Symbol		Parameter	Min.(1)	Max.(1)	Unit
Input level	V_{DD}	USB OTG HS operating voltage	1.7	3.6	V

1. All the voltages are measured from the local ground potential.

Table 72. USB HS clock timing parameters(1)

Symbol	Parameter		Min	Typ	Max	Unit
-	f_{HCLK} value to guarantee proper operation of USB HS interface		30	-	-	MHz
F_{START_8BIT}	Frequency (first transition)	8-bit ±10%	54	60	66	MHz
F_{STEADY}	Frequency (steady state) ±500 ppm		59.97	60	60.03	MHz
D_{START_8BIT}	Duty cycle (first transition)	8-bit ±10%	40	50	60	%
D_{STEADY}	Duty cycle (steady state) ±500 ppm		49.975	50	50.025	%
t_{STEADY}	Time to reach the steady state frequency and duty cycle after the first transition		-	-	1.4	ms

Table 72. USB HS clock timing parameters(1) (continued)

Symbol	Parameter		Min	Typ	Max	Unit
t_{START_DEV}	Clock startup time after the de-assertion of SuspendM	Peripheral	-	-	5.6	ms
t_{START_HOST}		Host	-	-	-	
t_{PREP}	PHY preparation time after the first transition of the input clock		-	-	-	µs

1. Guaranteed by design.

Figure 44. ULPI timing diagram

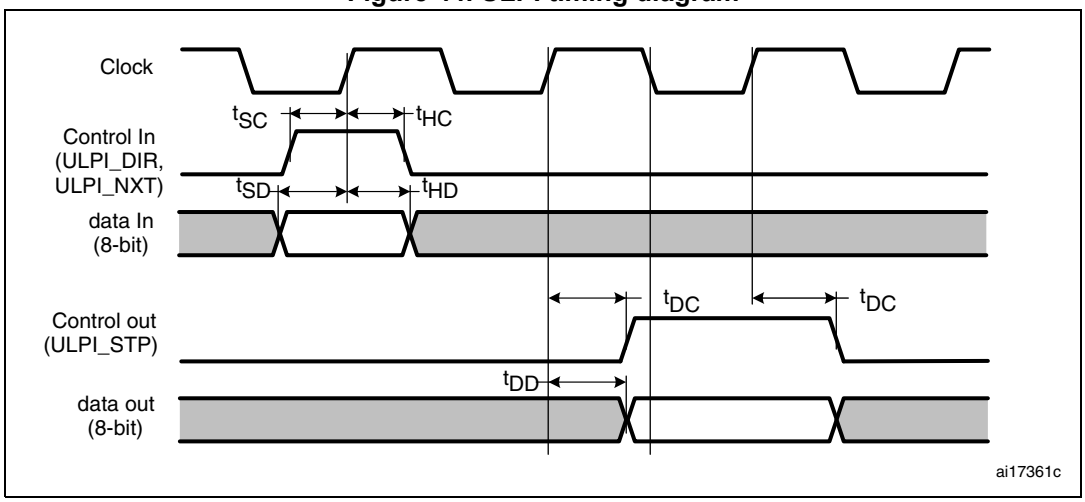

Table 73. Dynamic characteristics: USB ULPI(1)

Symbol	Parameter	Conditions	Min.	Typ.	Max.	Unit
t_{SC}	Control in (ULPI_DIR, ULPI_NXT) setup time	-	1	-	-	ns
t_{HC}	Control in (ULPI_DIR, ULPI_NXT) hold time	-	1.5	-	-	
t_{SD}	Data in setup time	-	1.5	-	-	
t_{HD}	Data in hold time	-	1.5	-	-	
t_{DC}/t_{DD}	Data/control output delay	2.7 V < V_{DD} < 3.6 V, C_L = 20 pF	-	6	8.5	
		1.71 V < V_{DD} < 3.6 V, C_L = 15 pF	-	6	11.5	

1. Guaranteed based on test during characterization.

CAN (controller area network) interface

Refer to *Section 6.3.17: I/O port characteristics* for more details on the input/output alternate function characteristics (CANx_TX and CANx_RX).

6.3.21 12-bit ADC characteristics

Unless otherwise specified, the parameters given in *Table 74* are derived from tests performed under the ambient temperature, f_{PCLK2} frequency and V_{DDA} supply voltage conditions summarized in *Table 16*.

Table 74. ADC characteristics

Symbol	Parameter	Conditions	Min	Typ	Max	Unit
V_{DDA}	Power supply	$V_{DDA} - V_{REF+} < 1.2$ V	1.7(1)	-	3.6	V
V_{REF+}	Positive reference voltage		1.7(1)	-	V_{DDA}	
V_{REF-}	Negative reference voltage	-	-	0	-	
f_{ADC}	ADC clock frequency	V_{DDA} = 1.7(1) to 2.4 V	0.6	15	18	MHz
		V_{DDA} = 2.4 to 3.6 V	0.6	30	36	MHz
f_{TRIG}(2)	External trigger frequency	f_{ADC} = 30 MHz, 12-bit resolution	-	-	1764	kHz
		-	-	-	17	$1/f_{ADC}$
V_{AIN}	Conversion voltage range(3)	-	0 (V_{SSA} or V_{REF-} tied to ground)	-	V_{REF+}	V
R_{AIN}(2)	External input impedance	See *Equation 1* for details	-	-	50	κΩ
R_{ADC}(2)(4)	Sampling switch resistance	-	-	-	6	κΩ
C_{ADC}(2)	Internal sample and hold capacitor	-	-	4	7	pF
t_{lat}(2)	Injection trigger conversion latency	f_{ADC} = 30 MHz	-	-	0.100	µs
		-	-	-	3(5)	$1/f_{ADC}$
t_{latr}(2)	Regular trigger conversion latency	f_{ADC} = 30 MHz	-	-	0.067	µs
		-	-	-	2(5)	$1/f_{ADC}$
t_S(2)	Sampling time	f_{ADC} = 30 MHz	0.100	-	16	µs
		-	3	-	480	$1/f_{ADC}$
t_{STAB}(2)	Power-up time	-	-	2	3	µs
t_{CONV}(2)	Total conversion time (including sampling time)	f_{ADC} = 30 MHz 12-bit resolution	0.50	-	16.40	µs
		f_{ADC} = 30 MHz 10-bit resolution	0.43	-	16.34	µs
		f_{ADC} = 30 MHz 8-bit resolution	0.37	-	16.27	µs
		f_{ADC} = 30 MHz 6-bit resolution	0.30	-	16.20	µs
		9 to 492 (t_S for sampling +n-bit resolution for successive approximation)				$1/f_{ADC}$

Table 74. ADC characteristics (continued)

Symbol	Parameter	Conditions	Min	Typ	Max	Unit
f_S(2)	Sampling rate (f_{ADC} = 30 MHz, and t_S = 3 ADC cycles)	12-bit resolution Single ADC	-	-	2	Msps
		12-bit resolution Interleave Dual ADC mode	-	-	3.75	Msps
		12-bit resolution Interleave Triple ADC mode	-	-	6	Msps
I_{VREF+}(2)	ADC V_{REF} DC current consumption in conversion mode	-	-	300	500	µA
I_{VDDA}(2)	ADC V_{DDA} DC current consumption in conversion mode	-	-	1.6	1.8	mA

1. V_{DDA} minimum value of 1.7 V is obtained with the use of an external power supply supervisor (refer to *Section 3.16.2: Internal reset OFF*).
2. Guaranteed based on test during characterization.
3. V_{REF+} is internally connected to V_{DDA} and V_{REF-} is internally connected to V_{SSA}.
4. R_{ADC} maximum value is given for V_{DD}=1.7 V, and minimum value for V_{DD}=3.3 V.
5. For external triggers, a delay of $1/f_{PCLK2}$ must be added to the latency specified in *Table 74*.

Equation 1: R_{AIN} max formula

$$R_{AIN} = \frac{(k-0.5)}{f_{ADC} \times C_{ADC} \times \ln(2^{N+2})} - R_{ADC}$$

The formula above (*Equation 1*) is used to determine the maximum external impedance allowed for an error below 1/4 of LSB. N = 12 (from 12-bit resolution) and k is the number of sampling periods defined in the ADC_SMPR1 register.

Table 75. ADC static accuracy at f_{ADC} = 18 MHz(1)

Symbol	Parameter	Test conditions	Typ	Max(2)	Unit
ET	Total unadjusted error	f_{ADC} =18 MHz V_{DDA} = 1.7 to 3.6 V V_{REF} = 1.7 to 3.6 V V_{DDA} –V_{REF} < 1.2 V	±3	±4	LSB
EO	Offset error		±2	±3	
EG	Gain error		±1	±3	
ED	Differential linearity error		±1	±2	
EL	Integral linearity error		±2	±3	

1. Better performance could be achieved in restricted V_{DD}, frequency and temperature ranges.
2. Guaranteed based on test during characterization.

Table 76. ADC static accuracy at f_{ADC} = 30 MHz(1)

Symbol	Parameter	Test conditions	Typ	Max(2)	Unit
ET	Total unadjusted error	f_{ADC} = 30 MHz, R_{AIN} < 10 kΩ, V_{DDA} = 2.4 to 3.6 V, V_{REF} = 1.7 to 3.6 V, $V_{DDA} - V_{REF}$ < 1.2 V	±2	±5	LSB
EO	Offset error		±1.5	±2.5	
EG	Gain error		±1.5	±3	
ED	Differential linearity error		±1	±2	
EL	Integral linearity error		±1.5	±3	

1. Better performance could be achieved in restricted V_{DD}, frequency and temperature ranges.
2. Guaranteed based on test during characterization.

Table 77. ADC static accuracy at f_{ADC} = 36 MHz(1)

Symbol	Parameter	Test conditions	Typ	Max(2)	Unit
ET	Total unadjusted error	f_{ADC} =36 MHz, V_{DDA} = 2.4 to 3.6 V, V_{REF} = 1.7 to 3.6 V $V_{DDA} - V_{REF}$ < 1.2 V	±4	±7	LSB
EO	Offset error		±2	±3	
EG	Gain error		±3	±6	
ED	Differential linearity error		±2	±3	
EL	Integral linearity error		±3	±6	

1. Better performance could be achieved in restricted V_{DD}, frequency and temperature ranges.
2. Guaranteed based on test during characterization.

Table 78. ADC dynamic accuracy at f_{ADC} = 18 MHz - limited test conditions(1)

Symbol	Parameter	Test conditions	Min	Typ	Max	Unit
ENOB	Effective number of bits	f_{ADC} =18 MHz V_{DDA} = V_{REF+}= 1.7 V Input Frequency = 20 KHz Temperature = 25 °C	10.3	10.4	-	bits
SINAD	Signal-to-noise and distortion ratio		64	64.2	-	dB
SNR	Signal-to-noise ratio		64	65	-	
THD	Total harmonic distortion		-67	-72	-	

1. Guaranteed based on test during characterization.

Table 79. ADC dynamic accuracy at f_{ADC} = 36 MHz - limited test conditions(1)

Symbol	Parameter	Test conditions	Min	Typ	Max	Unit
ENOB	Effective number of bits	f_{ADC} =36 MHz V_{DDA} = V_{REF+} = 3.3 V Input Frequency = 20 KHz Temperature = 25 °C	10.6	10.8	-	bits
SINAD	Signal-to noise and distortion ratio		66	67	-	dB
SNR	Signal-to noise ratio		64	68	-	
THD	Total harmonic distortion		- 70	- 72	-	

1. Guaranteed based on test during characterization.

Note: ADC accuracy vs. negative injection current: injecting a negative current on any analog input pins should be avoided as this significantly reduces the accuracy of the conversion

being performed on another analog input. It is recommended to add a Schottky diode (pin to ground) to analog pins which may potentially inject negative currents.

Any positive injection current within the limits specified for $I_{INJ(PIN)}$ and $\Sigma I_{INJ(PIN)}$ in *Section 6.3.17* does not affect the ADC accuracy.

Figure 45. ADC accuracy characteristics

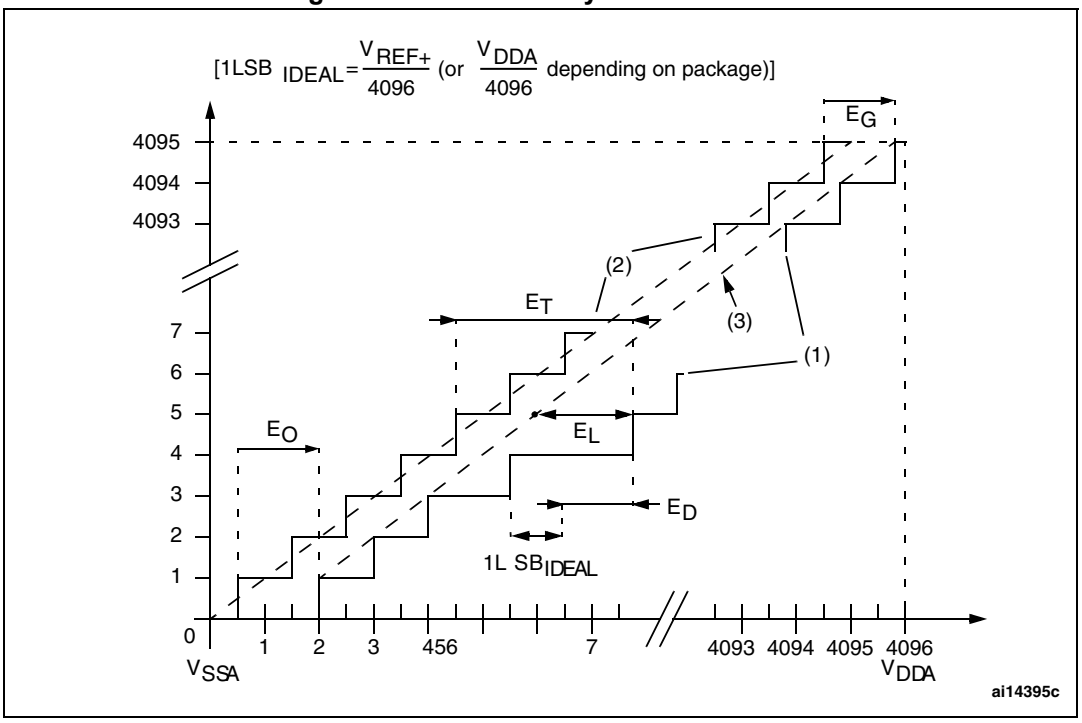

1. See also *Table 76*.
2. Example of an actual transfer curve.
3. Ideal transfer curve.
4. End point correlation line.
5. E_T = Total Unadjusted Error: maximum deviation between the actual and the ideal transfer curves.
   EO = Offset Error: deviation between the first actual transition and the first ideal one.
   EG = Gain Error: deviation between the last ideal transition and the last actual one.
   ED = Differential Linearity Error: maximum deviation between actual steps and the ideal one.
   EL = Integral Linearity Error: maximum deviation between any actual transition and the end point correlation line.

Figure 46. Typical connection diagram using the ADC

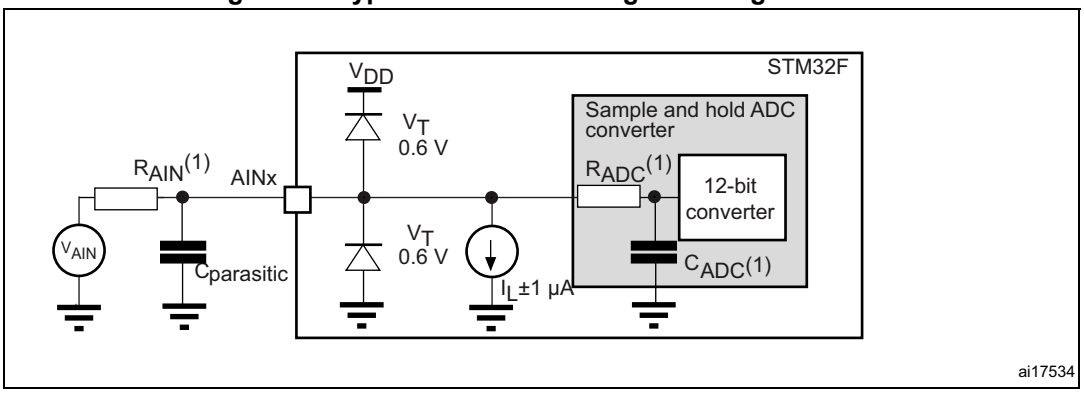

1. Refer to *Table 74* for the values of R_{AIN}, R_{ADC} and C_{ADC}.
2. $C_{parasitic}$ represents the capacitance of the PCB (dependent on soldering and PCB layout quality) plus the pad capacitance (roughly 5 pF). A high $C_{parasitic}$ value downgrades conversion accuracy. To remedy this, f_{ADC} should be reduced.

General PCB design guidelines

Power supply decoupling should be performed as shown in *Figure 47* or *Figure 48*, depending on whether V_{REF+} is connected to V_{DDA} or not. The 10 nF capacitors should be ceramic (good quality). They should be placed them as close as possible to the chip.

Figure 47. Power supply and reference decoupling (V_{REF+} not connected to V_{DDA})

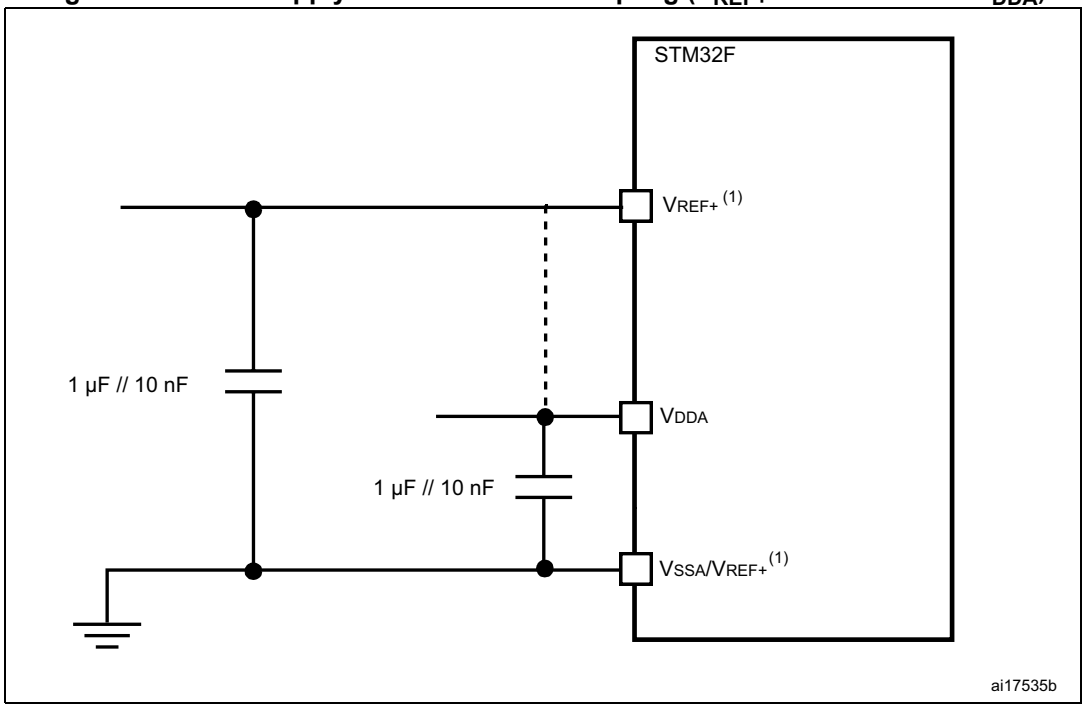

1. V_{REF+} and V_{REF-} inputs are both available on UFBGA144. V_{REF+} is also available on LQFP100, LQFP144, and WLCSP81. When V_{REF+} and V_{REF-} are not available, they are internally connected to V_{DDA} and V_{SSA}.

Figure 48. Power supply and reference decoupling (V_{REF+} connected to V_{DDA})

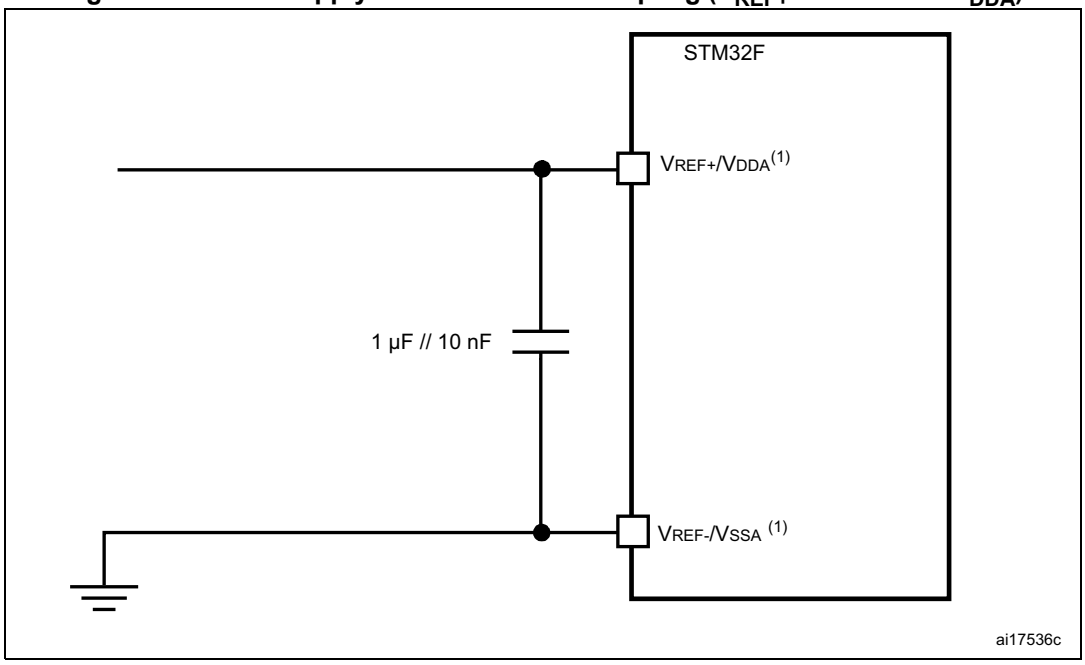

1. V_{REF+} and V_{REF-} inputs are both available on UFBGA144. V_{REF+} is also available on LQFP100, LQFP144, and WLCSP81. When V_{REF+} and V_{REF-} are not available, they are internally connected to V_{DDA} and V_{SSA}.

6.3.22 Temperature sensor characteristics

Table 80. Temperature sensor characteristics

Symbol	Parameter	Min	Typ	Max	Unit
T_L(1)	V_{SENSE} linearity with temperature	-	±1	±2	°C
Avg_Slope(1)	Average slope	-	2.5	-	mV/°C
V_{25}(1)	Voltage at 25 °C	-	0.76	-	V
t_{START}(2)	Startup time	-	6	10	µs
T_{S_temp}(2)	ADC sampling time when reading the temperature (1 °C accuracy)	10	-	-	µs

1. Guaranteed based on test during characterization.
2. Guaranteed by design.

Table 81. Temperature sensor calibration values

Symbol	Parameter	Memory address
TS_CAL1	TS ADC raw data acquired at temperature of 30 °C, V_{DDA}= 3.3 V	0x1FFF 7A2C - 0x1FFF 7A2D
TS_CAL2	TS ADC raw data acquired at temperature of 110 °C, V_{DDA}= 3.3 V	0x1FFF 7A2E - 0x1FFF 7A2F

6.3.23 V_{BAT} monitoring characteristics

Table 82. V_{BAT} monitoring characteristics

Symbol	Parameter	Min	Typ	Max	Unit
R	Resistor bridge for V_{BAT}	-	50	-	KΩ
Q	Ratio on V_{BAT} measurement	-	4	-	-
Er(1)	Error on Q	- 1	-	+ 1	%
T_{S_vbat}(2)(2)	ADC sampling time when reading the V_{BAT} 1 mV accuracy	5	-	-	µs

1. Guaranteed by design.
2. Shortest sampling time can be determined in the application by multiple iterations.

6.3.24 Reference voltage

The parameters given in *Table 83* are derived from tests performed under ambient temperature and V_{DD} supply voltage conditions summarized in *Table 16*.

Table 83. internal reference voltage

Symbol	Parameter	Conditions	Min	Typ	Max	Unit
V_{REFINT}	Internal reference voltage	–40 °C < T_A < +105 °C	1.18	1.21	1.24	V
$T_{S_vrefint}$(1)	ADC sampling time when reading the internal reference voltage	-	10	-	-	µs
V_{RERINT_s}(2)	Internal reference voltage spread over the temperature range	V_{DD} = 3V ± 10mV	-	3	5	mV
T_{Coeff}(2)	Temperature coefficient	-	-	30	50	ppm/°C
t_{START}(2)	Startup time	-	-	6	10	µs

1. Shortest sampling time can be determined in the application by multiple iterations.
2. Guaranteed by design.

Table 84. Internal reference voltage calibration values

Symbol	Parameter	Memory address
V_{REFIN_CAL}	Raw data acquired at temperature of 30 °C $_{VDDA}$ = 3.3 V	0x1FFF 7A2A - 0x1FFF 7A2B

6.3.25 DAC electrical characteristics

Table 85. DAC characteristics

Symbol	Parameter	Conditions	Min	Typ	Max	Unit	Comments
V_{DDA}	Analog supply voltage	-	1.7(1)	-	3.6	V	-
V_{REF+}	Reference supply voltage	-	1.7(1)	-	3.6	V	$V_{REF+} \leq V_{DDA}$

Table 85. DAC characteristics (continued)

Symbol	Parameter	Conditions		Min	Typ	Max	Unit	Comments
V_{SSA}	Ground	-		0	-	0	V	-
R_{LOAD}(2)	Resistive load	DAC output buffer ON	Connected to V_{SSA}	5	-	-	kΩ	-
			Connected to V_{DDA}	25	-	-		-
R_O(2)	Impedance output with buffer OFF	-		-	-	15	kΩ	When the buffer is OFF, the Minimum resistive load between DAC_OUT and V_{SS} to have a 1% accuracy is 1.5 MΩ
C_{LOAD}(2)	Capacitive load	-		-	-	50	pF	Maximum capacitive load at DAC_OUT pin (when the buffer is ON).
DAC_OUT min(2)	Lower DAC_OUT voltage with buffer ON	-		0.2	-	-	V	It gives the maximum output excursion of the DAC. It corresponds to 12-bit input code (0x0E0) to (0xF1C) at V_{REF+} = 3.6 V and (0x1C7) to (0xE38) at V_{REF+} = 1.7 V
DAC_OUT max(2)	Higher DAC_OUT voltage with buffer ON	-		-	-	V_{DDA} – 0.2	V	
DAC_OUT min(2)	Lower DAC_OUT voltage with buffer OFF	-		-	0.5	-	mV	It gives the maximum output excursion of the DAC.
DAC_OUT max(2)	Higher DAC_OUT voltage with buffer OFF	-		-	-	V_{REF+} – 1LSB	V	
I_{VREF+}(4)	DAC DC V_{REF} current consumption in quiescent mode (Standby mode)	-		-	170	240	µA	With no load, worst code (0x800) at V_{REF+} = 3.6 V in terms of DC consumption on the inputs
		-		-	50	75		With no load, worst code (0xF1C) at V_{REF+} = 3.6 V in terms of DC consumption on the inputs
I_{DDA}(4)	DAC DC VDDA current consumption in quiescent mode(3)	-		-	280	380	µA	With no load, middle code (0x800) on the inputs
		-		-	475	625	µA	With no load, worst code (0xF1C) at V_{REF+} = 3.6 V in terms of DC consumption on the inputs
DNL(4)	Differential non linearity Difference between two consecutive code-1LSB)	-		-	-	±0.5	LSB	Given for the DAC in 10-bit configuration.
		-		-	-	±2	LSB	Given for the DAC in 12-bit configuration.

Table 85. DAC characteristics (continued)

Symbol	Parameter	Conditions	Min	Typ	Max	Unit	Comments
INL(4)	Integral non linearity (difference between measured value at Code i and the value at Code i on a line drawn between Code 0 and last Code 1023)	-	-	-	±1	LSB	Given for the DAC in 10-bit configuration.
		-	-	-	±4	LSB	Given for the DAC in 12-bit configuration.
Offset(4)	Offset error (difference between measured value at Code (0x800) and the ideal value = $V_{REF+}/2$)	-	-	-	±10	mV	Given for the DAC in 12-bit configuration
		-	-	-	±3	LSB	Given for the DAC in 10-bit at V_{REF+} = 3.6 V
		-	-	-	±12	LSB	Given for the DAC in 12-bit at V_{REF+} = 3.6 V
Gain error(4)	Gain error	-	-	-	±0.5	%	Given for the DAC in 12-bit configuration
$t_{SETTLING}$(4)	Total Harmonic Distortion Buffer ON	-	-	3	6	µs	$C_{LOAD} \leq 50$ pF, $R_{LOAD} \geq 5$ kΩ
THD(4)	-	-	-	-	-	dB	$C_{LOAD} \leq 50$ pF, $R_{LOAD} \geq 5$ kΩ
Update rate(2)	Max frequency for a correct DAC_OUT change when small variation in the input code (from code i to i+1LSB)	-	-	-	1	MS/s	$C_{LOAD} \leq 50$ pF, $R_{LOAD} \geq 5$ kΩ
t_{WAKEUP}(4)	Wakeup time from off state (Setting the ENx bit in the DAC Control register)	-	-	6.5	10	µs	$C_{LOAD} \leq 50$ pF, $R_{LOAD} \geq 5$ kΩ input code between lowest and highest possible ones.
PSRR+ (2)	Power supply rejection ratio (to V_{DDA}) (static DC measurement)	-	-	- 67	- 40	dB	No R_{LOAD}, C_{LOAD} = 50 pF

1. V_{DDA} minimum value of 1.7 V is obtained with the use of an external power supply supervisor (refer to *Section 3.16.2: Internal reset OFF*).
2. Guaranteed by design.
3. The quiescent mode corresponds to a state where the DAC maintains a stable output level to ensure that no dynamic consumption occurs.
4. Guaranteed based on test during characterization.

Figure 49. 12-bit buffered/non-buffered DAC

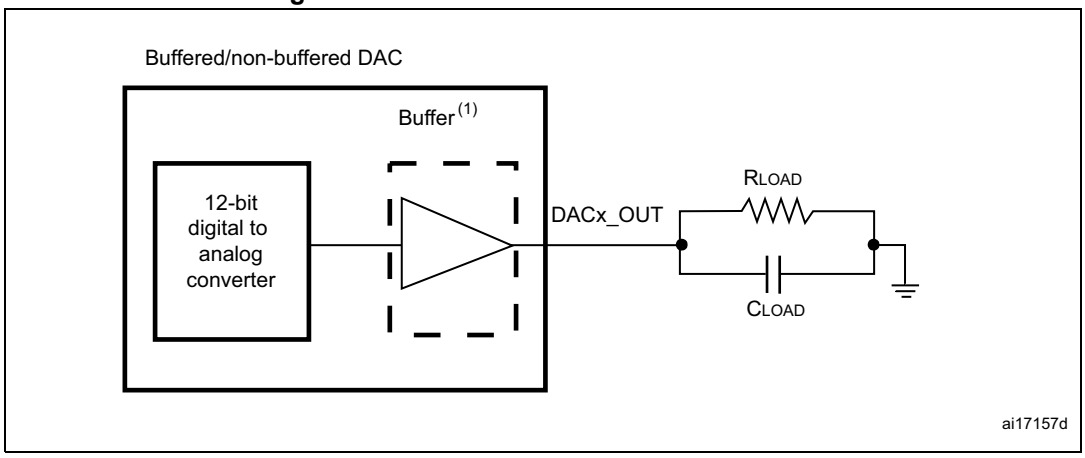

1. The DAC integrates an output buffer that can be used to reduce the output impedance and to drive external loads directly without the use of an external operational amplifier. The buffer can be bypassed by configuring the BOFFx bit in the DAC_CR register.

6.3.26 FMC characteristics

Unless otherwise specified, the parameters given in *Table 86* to *Table 93* for the FMC interface are derived from tests performed under the ambient temperature, f_{HCLK} frequency and V_{DD} supply voltage conditions summarized in *Table 15*, with the following configuration:

- Output speed is set to OSPEEDRy[1:0] = 10
- Capacitance load C = 30 pF
- Measurement points are done at CMOS levels: $0.5V_{DD}$

Refer to *Section 6.3.17: I/O port characteristics* for more details on the input/output characteristics.

Asynchronous waveforms and timings

Figure 50 through *Figure 53* represent asynchronous waveforms and *Table 86* through *Table 93* provide the corresponding timings. The results shown in these tables are obtained with the following FMC configuration:

- AddressSetupTime = 0x1
- AddressHoldTime = 0x1
- DataSetupTime = 0x1 (except for asynchronous NWAIT mode , DataSetupTime = 0x5)
- BusTurnAroundDuration = 0x0

In all timing tables, the T_{HCLK} is the HCLK clock period.

Figure 50. Asynchronous non-multiplexed SRAM/PSRAM/NOR read waveforms

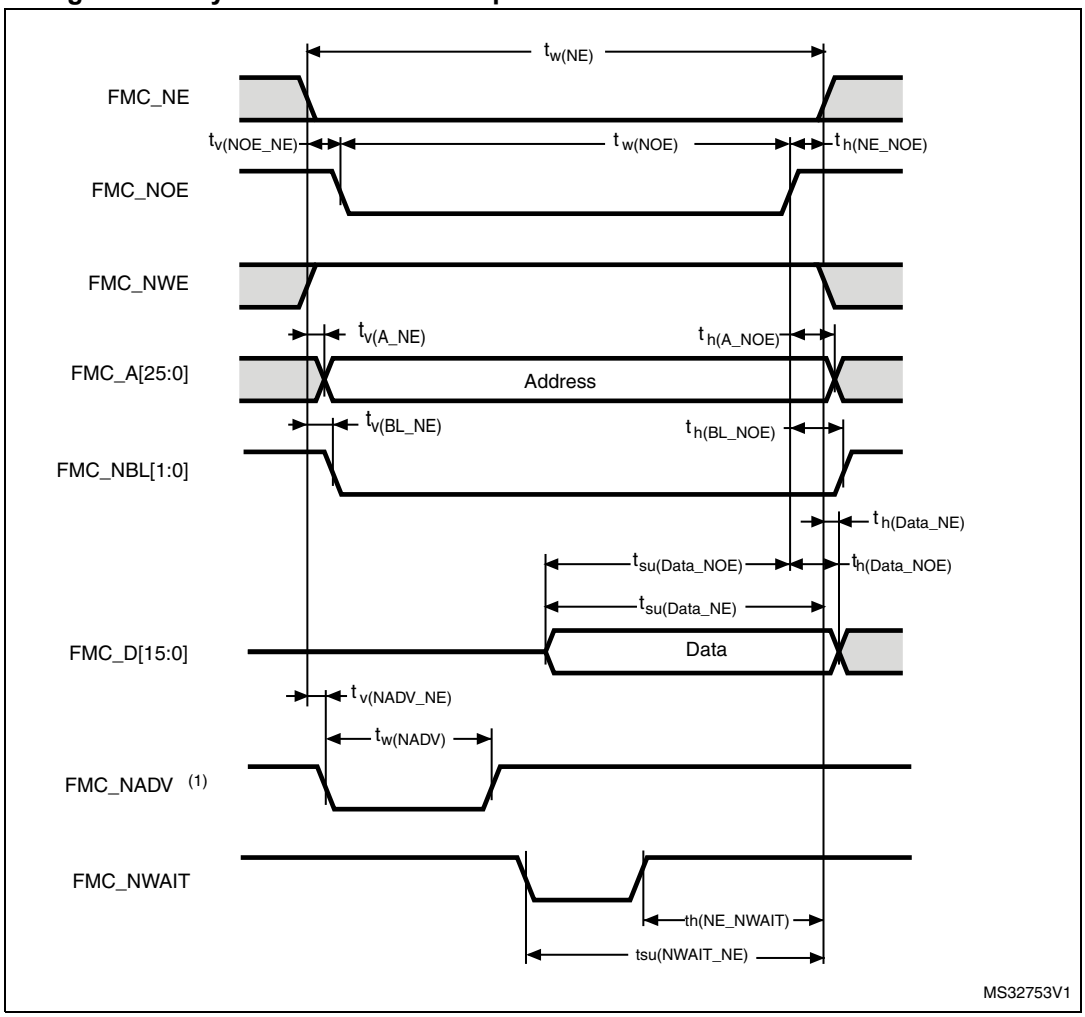

1. Mode 2/B, C and D only. In Mode 1, FMC_NADV is not used.

Table 86. Asynchronous non-multiplexed SRAM/PSRAM/NOR - read timings(1)(2)

Symbol	Parameter	Min	Max	Unit
$t_{w(NE)}$	FMC_NE low time	$2T_{HCLK} – 2$	$2\ T_{HCLK} + 0.5$	ns
$t_{v(NOE_NE)}$	FMC_NEx low to FMC_NOE low	0	1	
$t_{w(NOE)}$	FMC_NOE low time	$2T_{HCLK} - 1$	$2T_{HCLK} + 0.5$	
$t_{h(NE_NOE)}$	FMC_NOE high to FMC_NE high hold time	0	-	
$t_{v(A_NE)}$	FMC_NEx low to FMC_A valid	-	0.5	
$t_{h(A_NOE)}$	Address hold time after FMC_NOE high	0	-	
$t_{v(BL_NE)}$	FMC_NEx low to FMC_BL valid	-	2	
$t_{h(BL_NOE)}$	FMC_BL hold time after FMC_NOE high	0	-	
$t_{su(Data_NE)}$	Data to FMC_NEx high setup time	$T_{HCLK} - 2$	-	
$t_{su(Data_NOE)}$	Data to FMC_NOEx high setup time	$T_{HCLK} - 2$	-	
$t_{h(Data_NOE)}$	Data hold time after FMC_NOE high	0	-	
$t_{h(Data_NE)}$	Data hold time after FMC_NEx high	0	-	
$t_{v(NADV_NE)}$	FMC_NEx low to FMC_NADV low	-	0	
$t_{w(NADV)}$	FMC_NADV low time	-	$T_{HCLK} +1$	

1. C_L = 30 pF.
2. Guaranteed based on test during characterization.

Table 87. Asynchronous non-multiplexed SRAM/PSRAM/NOR read - NWAIT timings(1)(2)

Symbol	Parameter	Min	Max	Unit
$t_{w(NE)}$	FMC_NE low time	$7T_{HCLK} + 1$	$7T_{HCLK}$	ns
$t_{w(NOE)}$	FMC_NWE low time	$5T_{HCLK} – 1$	$5T_{HCLK} + 1$	
$t_{w(NWAIT)}$	FMC_NWAIT low time	$T_{HCLK} – 0.5$	-	
$t_{su(NWAIT_NE)}$	FMC_NWAIT valid before FMC_NEx high	$5T_{HCLK}+ 1.5$	-	
$t_{h(NE_NWAIT)}$	FMC_NEx hold time after FMC_NWAIT invalid	$4T_{HCLK} + 1$	-	

1. C_L = 30 pF.
2. Guaranteed based on test during characterization.

Figure 51. Asynchronous non-multiplexed SRAM/PSRAM/NOR write waveforms

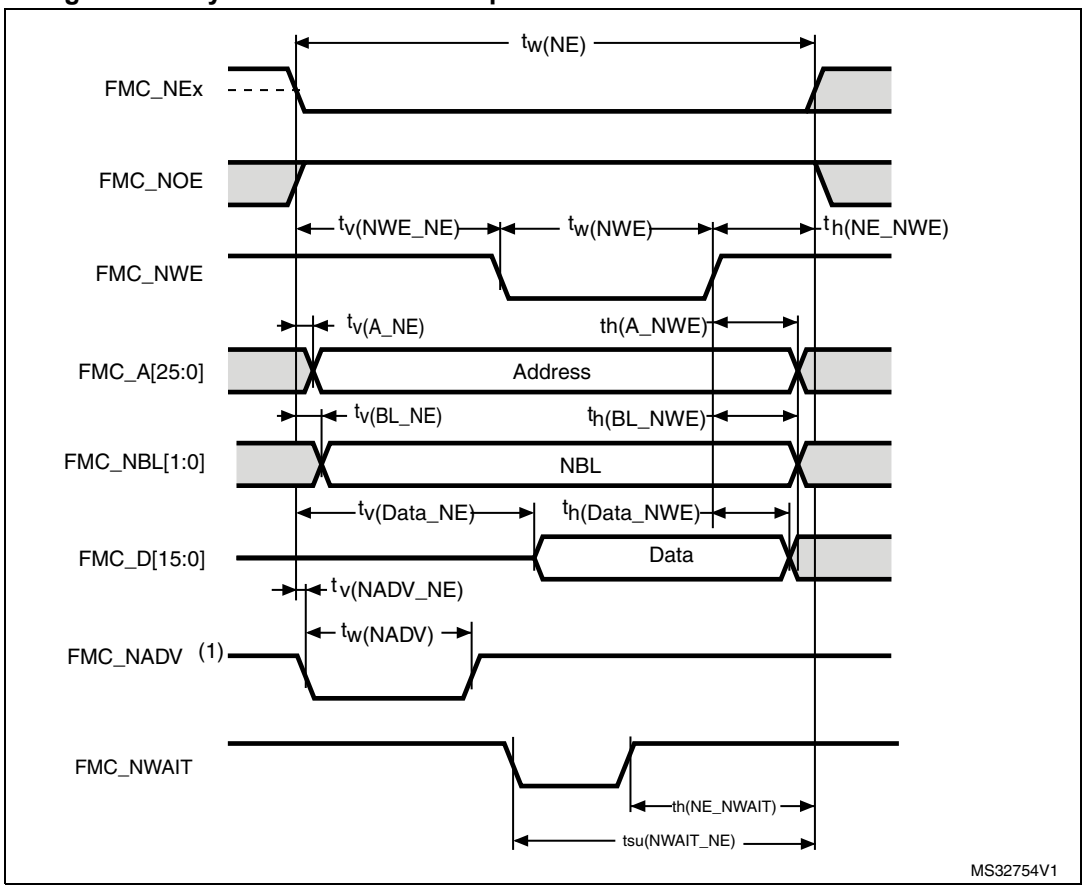

1. Mode 2/B, C and D only. In Mode 1, FMC_NADV is not used.

Table 88. Asynchronous non-multiplexed SRAM/PSRAM/NOR write timings(1)(2)

Symbol	Parameter	Min	Max	Unit
$t_{w(NE)}$	FMC_NE low time	3 T_{HCLK} - 2	3 T_{HCLK} +0.5	ns
$t_{v(NWE_NE)}$	FMC_NEx low to FMC_NWE low	T_{HCLK} – 0.5	T_{HCLK} + 0.5	
$t_{w(NWE)}$	FMC_NWE low time	T_{HCLK}	T_{HCLK}+ 0.5	
$t_{h(NE_NWE)}$	FMC_NWE high to FMC_NE high hold time	T_{HCLK} + 0.5	-	
$t_{v(A_NE)}$	FMC_NEx low to FMC_A valid	-	0	
$t_{h(A_NWE)}$	Address hold time after FMC_NWE high	T_{HCLK} - 0.5	-	
$t_{v(BL_NE)}$	FMC_NEx low to FMC_BL valid	-	1	
$t_{h(BL_NWE)}$	FMC_BL hold time after FMC_NWE high	T_{HCLK} + 0.5	-	
$t_{v(Data_NE)}$	Data to FMC_NEx low to Data valid	-	T_{HCLK} + 2	
$t_{h(Data_NWE)}$	Data hold time after FMC_NWE high	T_{HCLK} + 0.5	-	
$t_{v(NADV_NE)}$	FMC_NEx low to FMC_NADV low	-	0	
$t_{w(NADV)}$	FMC_NADV low time	-	T_{HCLK}+ 0.5	

1. C_L = 30 pF.
2. Guaranteed based on test during characterization.

Table 89. Asynchronous non-multiplexed SRAM/PSRAM/NOR write - NWAIT timings(1)(2)

Symbol	Parameter	Min	Max	Unit
$t_{w(NE)}$	FMC_NE low time	$8T_{HCLK}$ - 0.5	$8T_{HCLK}$ + 1	ns
$t_{w(NWE)}$	FMC_NWE low time	$6T_{HCLK}$ - 0.5	$6T_{HCLK}$ + 1	
$t_{su(NWAIT_NE)}$	FMC_NWAIT valid before FMC_NEx high	$6T_{HCLK}$ - 0.5	-	
$t_{h(NE_NWAIT)}$	FMC_NEx hold time after FMC_NWAIT invalid	$4T_{HCLK}$ + 2	-	

1. C_L = 30 pF.
2. Guaranteed based on test during characterization.

Figure 52. Asynchronous multiplexed PSRAM/NOR read waveforms

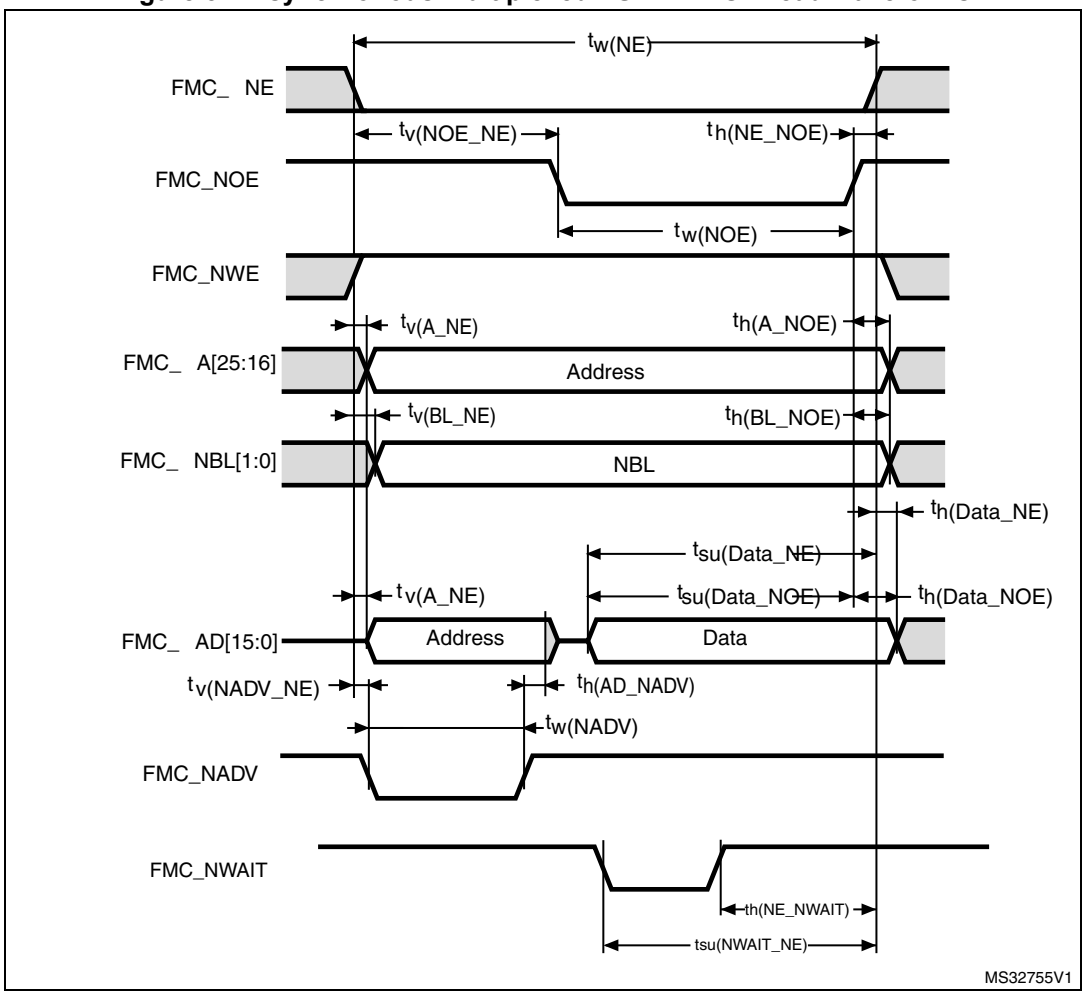

Table 90. Asynchronous multiplexed PSRAM/NOR read timings(1)(2)

Symbol	Parameter	Min	Max	Unit
$t_{w(NE)}$	FMC_NE low time	$3T_{HCLK} – 2$	$3T_{HCLK}+0.5$	ns
$t_{v(NOE_NE)}$	FMC_NEx low to FMC_NOE low	$2T_{HCLK} – 0.5$	$2T_{HCLK}$	
$t_{tw(NOE)}$	FMC_NOE low time	$T_{HCLK} – 1$	$T_{HCLK} + 0.5$	
$t_{h(NE_NOE)}$	FMC_NOE high to FMC_NE high hold time	0	-	
$t_{v(A_NE)}$	FMC_NEx low to FMC_A valid	-	2	
$t_{v(NADV_NE)}$	FMC_NEx low to FMC_NADV low	0	2	
$t_{w(NADV)}$	FMC_NADV low time	$T_{HCLK} – 0.5$	$T_{HCLK} + 0.5$	
$t_{h(AD_NADV)}$	FMC_AD(address) valid hold time after FMC_NADV high)	0	-	
$t_{h(A_NOE)}$	Address hold time after FMC_NOE high	$T_{HCLK} – 0.5$	-	
$t_{h(BL_NOE)}$	FMC_BL time after FMC_NOE high	0	-	
$t_{v(BL_NE)}$	FMC_NEx low to FMC_BL valid	-	2	
$t_{su(Data_NE)}$	Data to FMC_NEx high setup time	$T_{HCLK} + 1.5$	-	
$t_{su(Data_NOE)}$	Data to FMC_NOE high setup time	$T_{HCLK} + 1$	-	
$t_{h(Data_NE)}$	Data hold time after FMC_NEx high	0	-	
$t_{h(Data_NOE)}$	Data hold time after FMC_NOE high	0	-	

1. C_L = 30 pF.
2. Guaranteed based on test during characterization.

Table 91. Asynchronous multiplexed PSRAM/NOR read-NWAIT timings(1)(2)

Symbol	Parameter	Min	Max	Unit
$t_{w(NE)}$	FMC_NE low time	$8T_{HCLK}$ - 1	$8T_{HCLK}$ + 2	ns
$t_{w(NOE)}$	FMC_NWE low time	$5T_{HCLK} – 1$	$5T_{HCLK} + 1$	
$t_{su(NWAIT_NE)}$	FMC_NWAIT valid before FMC_NEx high	$5T_{HCLK} + 1.5$	-	
$t_{h(NE_NWAIT)}$	FMC_NEx hold time after FMC_NWAIT invalid	$4T_{HCLK} + 1$	-	

1. C_L = 30 pF.
2. Guaranteed based on test during characterization.

Figure 53. Asynchronous multiplexed PSRAM/NOR write waveforms

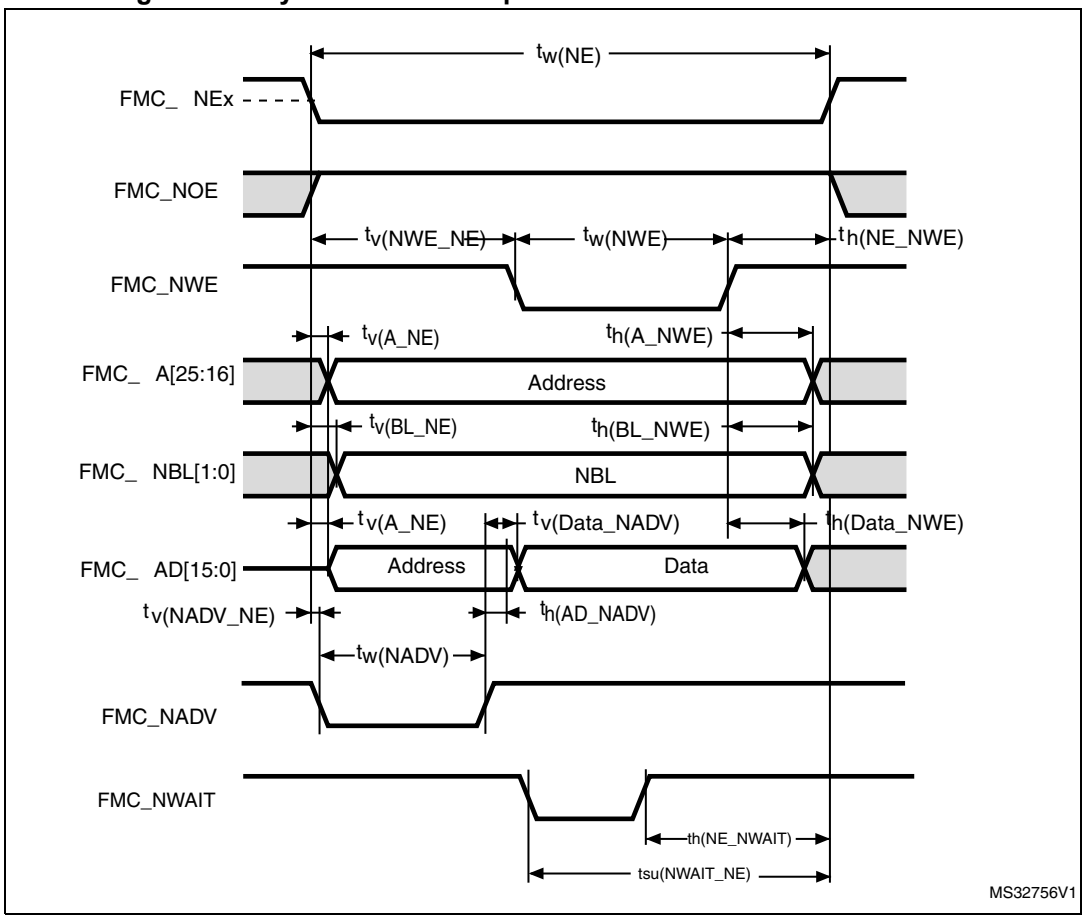

Table 92. Asynchronous multiplexed PSRAM/NOR write timings(1)(2)

Symbol	Parameter	Min	Max	Unit
$t_{w(NE)}$	FMC_NE low time	$4T_{HCLK}$ - 2	$4T_{HCLK}$+0.5	ns
$t_{v(NWE_NE)}$	FMC_NEx low to FMC_NWE low	T_{HCLK}	T_{HCLK} + 0.5	
$t_{w(NWE)}$	FMC_NWE low time	$2T_{HCLK}$	$2T_{HCLK}$ + 0.5	
$t_{h(NE_NWE)}$	FMC_NWE high to FMC_NE high hold time	T_{HCLK}	-	
$t_{v(A_NE)}$	FMC_NEx low to FMC_A valid	-	0	
$t_{v(NADV_NE)}$	FMC_NEx low to FMC_NADV low	0.5	1	
$t_{w(NADV)}$	FMC_NADV low time	T_{HCLK} – 0.5	T_{HCLK}+ 0.5	
$t_{h(AD_NADV)}$	FMC_AD(adress) valid hold time after FMC_NADV high)	T_{HCLK} – 2	-	
$t_{h(A_NWE)}$	Address hold time after FMC_NWE high	T_{HCLK}	-	
$t_{h(BL_NWE)}$	FMC_BL hold time after FMC_NWE high	T_{HCLK}–2	-	
$t_{v(BL_NE)}$	FMC_NEx low to FMC_BL valid	-	2	
$t_{v(Data_NADV)}$	FMC_NADV high to Data valid	-	T_{HCLK} + 1.5	
$t_{h(Data_NWE)}$	Data hold time after FMC_NWE high	T_{HCLK} + 0.5	-	

1. C_L = 30 pF.
2. Guaranteed based on test during characterization.

Table 93. Asynchronous multiplexed PSRAM/NOR write-NWAIT timings(1)(2)

Symbol	Parameter	Min	Max	Unit
$t_{w(NE)}$	FMC_NE low time	$9T_{HCLK}$	$9T_{HCLK}$ + 0.5	ns
$t_{w(NWE)}$	FMC_NWE low time	$7T_{HCLK}$	$7T_{HCLK}$ + 2	
$t_{su(NWAIT_NE)}$	FMC_NWAIT valid before FMC_NEx high	$6T_{HCLK}$ + 1.5	-	
$t_{h(NE_NWAIT)}$	FMC_NEx hold time after FMC_NWAIT invalid	$4T_{HCLK}$ – 1	-	

1. C_L = 30 pF.
2. Guaranteed based on test during characterization.

Synchronous waveforms and timings

Figure 54 through *Figure 57* represent synchronous waveforms and *Table 94* through *Table 97* provide the corresponding timings. The results shown in these tables are obtained with the following FMC configuration:

- BurstAccessMode = FMC_BurstAccessMode_Enable;
- MemoryType = FMC_MemoryType_CRAM;
- WriteBurst = FMC_WriteBurst_Enable;
- CLKDivision = 1; (0 is not supported, see the STM32F446 reference manual: RM0390)
- DataLatency = 1 for NOR Flash; DataLatency = 0 for PSRAM

In all timing tables, the T_{HCLK} is the HCLK clock period (with maximum FMC_CLK = 90 MHz).

Figure 54. Synchronous multiplexed NOR/PSRAM read timings

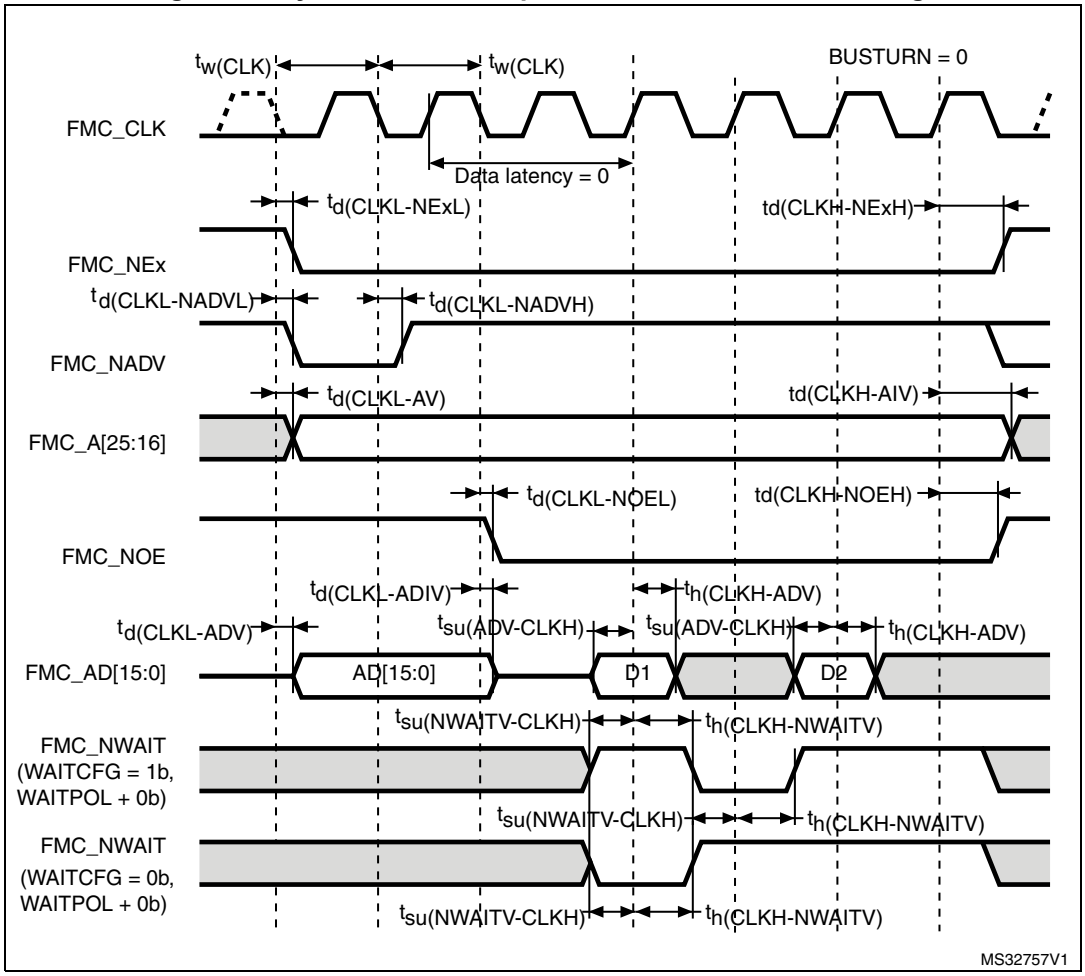

Table 94. Synchronous multiplexed NOR/PSRAM read timings(1)(2)

Symbol	Parameter	Min	Max	Unit
$t_{w(CLK)}$	FMC_CLK period	$2T_{HCLK}$	-	ns
$t_{d(CLKL-NExL)}$	FMC_CLK low to FMC_NEx low (x=0..2)	-	2.5	
$t_{d(CLKH_NExH)}$	FMC_CLK high to FMC_NEx high (x= 0…2)	T_{HCLK} - 0.5	-	
$t_{d(CLKL-NADVL)}$	FMC_CLK low to FMC_NADV low	-	0	
$t_{d(CLKL-NADVH)}$	FMC_CLK low to FMC_NADV high	0	-	
$t_{d(CLKL-AV)}$	FMC_CLK low to FMC_Ax valid (x=16…25)	-	2.5	
$t_{d(CLKH-AIV)}$	FMC_CLK high to FMC_Ax invalid (x=16…25)	T_{HCLK}	-	
$t_{d(CLKL-NOEL)}$	FMC_CLK low to FMC_NOE low	-	2	
$t_{d(CLKH-NOEH)}$	FMC_CLK high to FMC_NOE high	T_{HCLK} – 0.5	-	
$t_{d(CLKL-ADV)}$	FMC_CLK low to FMC_AD[15:0] valid	-	0.5	
$t_{d(CLKL-ADIV)}$	FMC_CLK low to FMC_AD[15:0] invalid	0	-	
$t_{su(ADV-CLKH)}$	FMC_A/D[15:0] valid data before FMC_CLK high	1	-	
$t_{h(CLKH-ADV)}$	FMC_A/D[15:0] valid data after FMC_CLK high	3.5	-	
$t_{su(NWAIT-CLKH)}$	FMC_NWAIT valid before FMC_CLK high	1	-	
$t_{h(CLKH-NWAIT)}$	FMC_NWAIT valid after FMC_CLK high	3.5	-	

1. C_L = 30 pF.
2. Guaranteed based on test during characterization.

Figure 55. Synchronous multiplexed PSRAM write timings

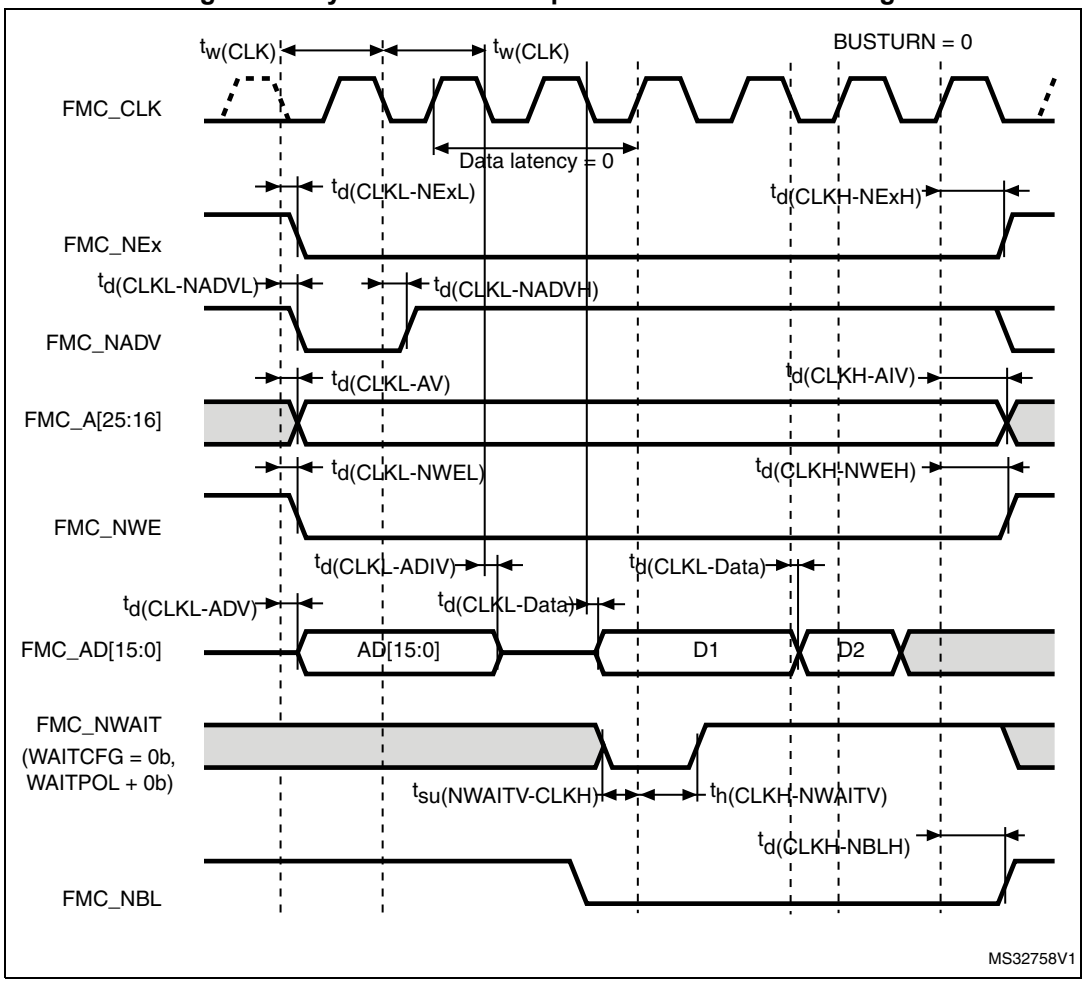

Table 95. Synchronous multiplexed PSRAM write timings(1)(2)

Symbol	Parameter	Min	Max	Unit
$t_{w(CLK)}$	FMC_CLK period, VDD range= 2.7 to 3.6 V	$2T_{HCLK}$ - 1	-	ns
$t_{d(CLKL-NExL)}$	FMC_CLK low to FMC_NEx low (x=0..2)	-	2.5	
$t_{d(CLKH-NExH)}$	FMC_CLK high to FMC_NEx high (x= 0…2)	T_{HCLK} + 0.5	-	
$t_{d(CLKL-NADVL)}$	FMC_CLK low to FMC_NADV low	-	2	
$t_{d(CLKL-NADVH)}$	FMC_CLK low to FMC_NADV high	0	-	
$t_{d(CLKL-AV)}$	FMC_CLK low to FMC_Ax valid (x=16…25)	-	2	
$t_{d(CLKH-AIV)}$	FMC_CLK high to FMC_Ax invalid (x=16…25)	T_{HCLK}	-	
$t_{d(CLKL-NWEL)}$	FMC_CLK low to FMC_NWE low	-	0	
$t_{(CLKH-NWEH)}$	FMC_CLK high to FMC_NWE high	T_{HCLK} - 0.5	-	
$t_{d(CLKL-ADV)}$	FMC_CLK low to FMC_AD[15:0] valid	-	3	
$t_{d(CLKL-ADIV)}$	FMC_CLK low to FMC_AD[15:0] invalid	0	-	
$t_{d(CLKL-DATA)}$	FMC_A/D[15:0] valid data after FMC_CLK low	-	3	
$t_{d(CLKL-NBLL)}$	FMC_CLK low to FMC_NBL low	0	-	
$t_{d(CLKH-NBLH)}$	FMC_CLK high to FMC_NBL high	T_{HCLK} - 0.5	-	
$t_{su(NWAIT-CLKH)}$	FMC_NWAIT valid before FMC_CLK high	4	-	
$t_{h(CLKH-NWAIT)}$	FMC_NWAIT valid after FMC_CLK high	0	-	

1. C_L = 30 pF.
2. Guaranteed based on test during characterization.

Figure 56. Synchronous non-multiplexed NOR/PSRAM read timings

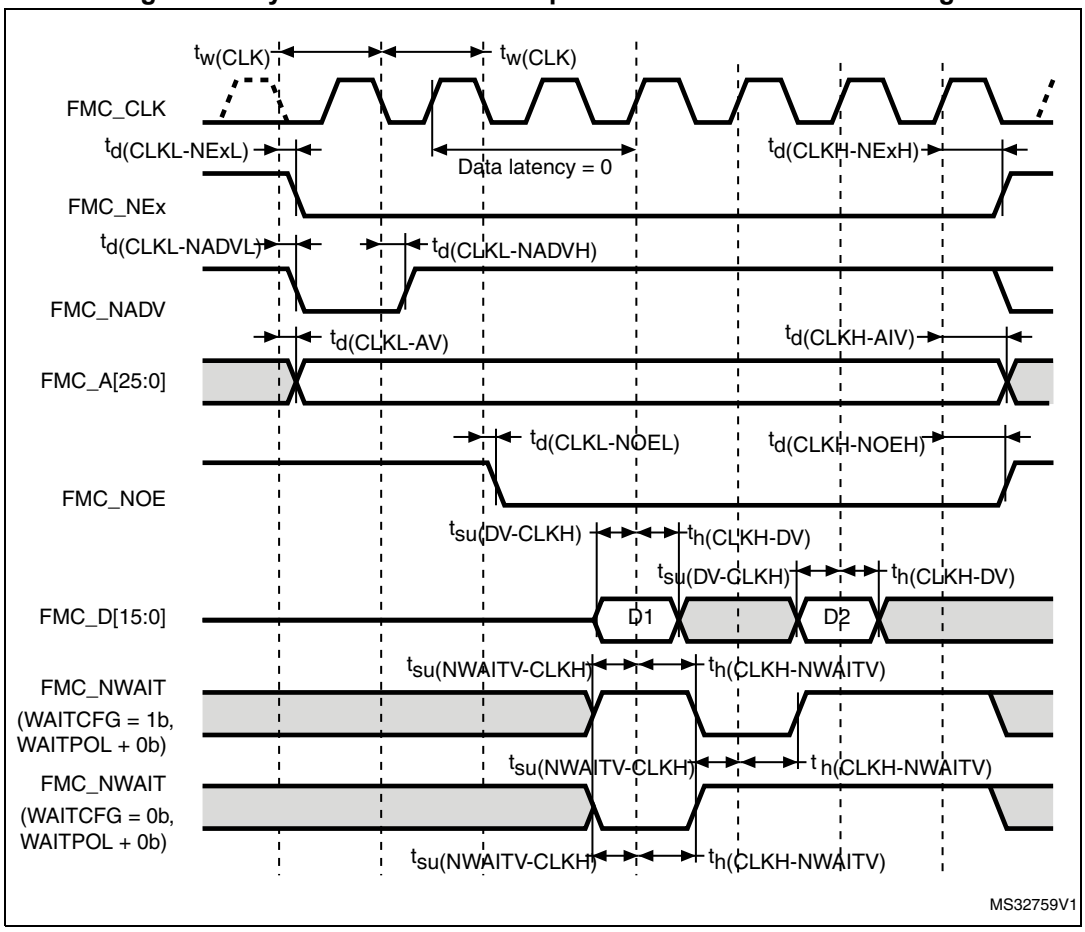

Table 96. Synchronous non-multiplexed NOR/PSRAM read timings(1)(2)

Symbol	Parameter	Min	Max	Unit
$t_{w(CLK)}$	FMC_CLK period	$2T_{HCLK}$	-	ns
$t_{(CLKL-NExL)}$	FMC_CLK low to FMC_NEx low (x=0..2)	-	2.5	
$t_{d(CLKH-NExH)}$	FMC_CLK high to FMC_NEx high (x= 0…2)	$T_{HCLK} – 0.5$	-	
$t_{d(CLKL-NADVL)}$	FMC_CLK low to FMC_NADV low	-	0	
$t_{d(CLKL-NADVH)}$	FMC_CLK low to FMC_NADV high	0	-	
$t_{d(CLKL-AV)}$	FMC_CLK low to FMC_Ax valid (x=16…25)	-	2.5	
$t_{d(CLKH-AIV)}$	FMC_CLK high to FMC_Ax invalid (x=16…25)	T_{HCLK}	-	
$t_{d(CLKL-NOEL)}$	FMC_CLK low to FMC_NOE low	-	2	
$t_{d(CLKH-NOEH)}$	FMC_CLK high to FMC_NOE high	$T_{HCLK} – 0.5$	-	
$t_{su(DV-CLKH)}$	FMC_D[15:0] valid data before FMC_CLK high	1	-	
$t_{h(CLKH-DV)}$	FMC_D[15:0] valid data after FMC_CLK high	3.5	-	
$t_{su(NWAIT-CLKH)}$	FMC_NWAIT valid before FMC_CLK high	1	-	
$t_{h(CLKH-NWAIT)}$	FMC_NWAIT valid after FMC_CLK high	3.5	-	

1. C_L = 30 pF.
2. Guaranteed based on test during characterization.

Figure 57. Synchronous non-multiplexed PSRAM write timings

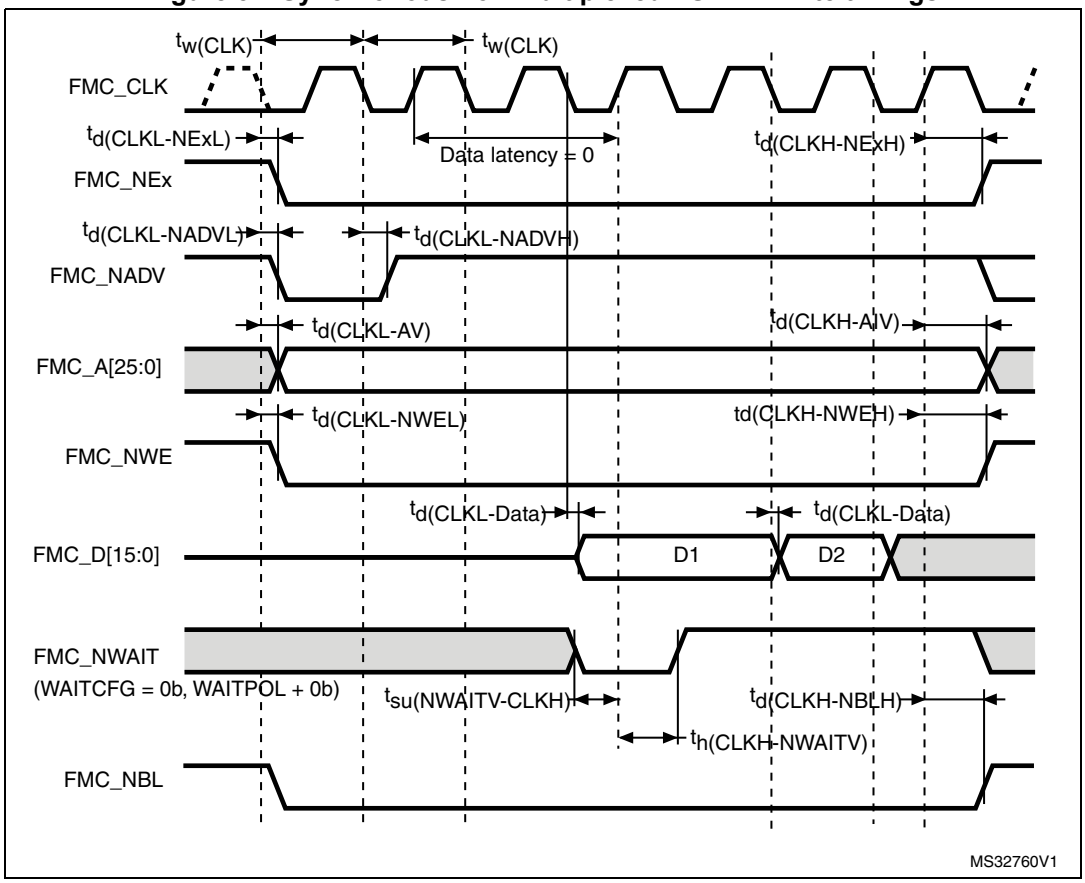

Table 97. Synchronous non-multiplexed PSRAM write timings(1)(2)

Symbol	Parameter	Min	Max	Unit
$t_{w(CLK)}$	FMC_CLK period	$2T_{HCLK} – 1$	-	ns
$t_{d(CLKL-NExL)}$	FMC_CLK low to FMC_NEx low (x=0..2)	-	2.5	
$t_{d(CLKH-NExH)}$	FMC_CLK high to FMC_NEx high (x= 0…2)	$T_{HCLK} – 0.5$	-	
$t_{d(CLKL-NADVL)}$	FMC_CLK low to FMC_NADV low	-	2	
$t_{d(CLKL-NADVH)}$	FMC_CLK low to FMC_NADV high	0	-	
$t_{d(CLKL-AV)}$	FMC_CLK low to FMC_Ax valid (x=16…25)	-	2	
$t_{d(CLKH-AIV)}$	FMC_CLK high to FMC_Ax invalid (x=16…25)	0	-	
$t_{d(CLKL-NWEL)}$	FMC_CLK low to FMC_NWE low	-	3	
$t_{d(CLKH-NWEH)}$	FMC_CLK high to FMC_NWE high	$T_{HCLK} + 1$	-	
$t_{d(CLKL-Data)}$	FMC_D[15:0] valid data after FMC_CLK low	-	2.5	
$t_{d(CLKL-NBLL)}$	FMC_CLK low to FMC_NBL low	3	-	
$t_{d(CLKH-NBLH)}$	FMC_CLK high to FMC_NBL high	$T_{HCLK} + 1.5$	-	
$t_{su(NWAIT-CLKH)}$	FMC_NWAIT valid before FMC_CLK high	1.5	-	
$t_{h(CLKH-NWAIT)}$	FMC_NWAIT valid after FMC_CLK high	0	-	

1. C_L = 30 pF.
2. Guaranteed based on test during characterization.

NAND controller waveforms and timings

Figure 58 through *Figure 61* represent synchronous waveforms, and *Table 98* and *Table 99* provide the corresponding timings. The results shown in this table are obtained with the following FMC configuration:

- COM.FSMC_SetupTime = 0x01;
- COM.FMC_WaitSetupTime = 0x03;
- COM.FMC_HoldSetupTime = 0x02;
- COM.FMC_HiZSetupTime = 0x01;
- ATT.FMC_SetupTime = 0x01;
- ATT.FMC_WaitSetupTime = 0x03;
- ATT.FMC_HoldSetupTime = 0x02;
- ATT.FMC_HiZSetupTime = 0x01;
- Bank = FMC_Bank_NAND;
- MemoryDataWidth = FMC_MemoryDataWidth_16b;
- ECC = FMC_ECC_Enable;
- ECCPageSize = FMC_ECCPageSize_512Bytes;
- TCLRSetupTime = 0;
- TARSetupTime = 0.

In all timing tables, the T_{HCLK} is the HCLK clock period.

Figure 58. NAND controller waveforms for read access

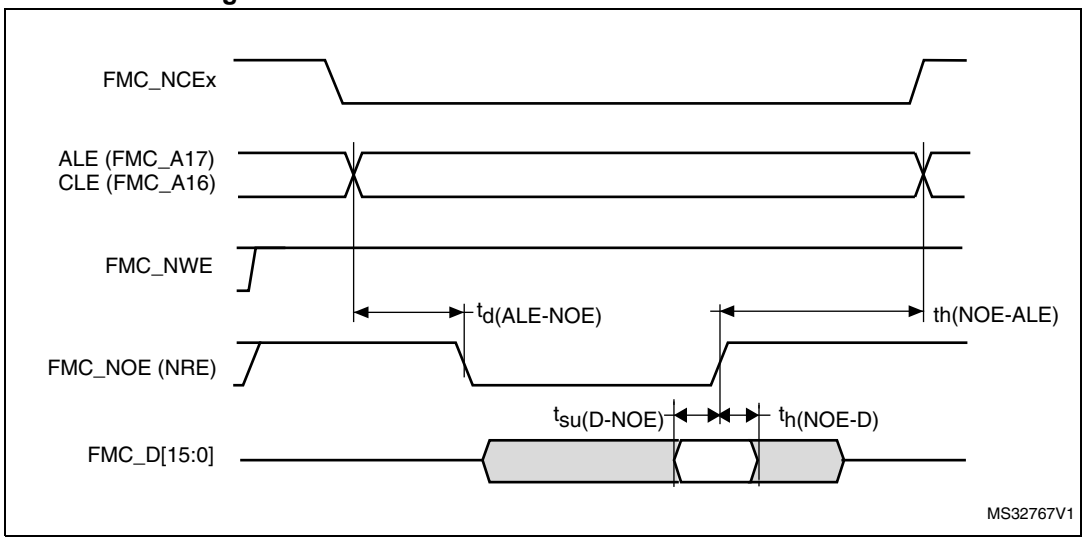

Figure 59. NAND controller waveforms for write access

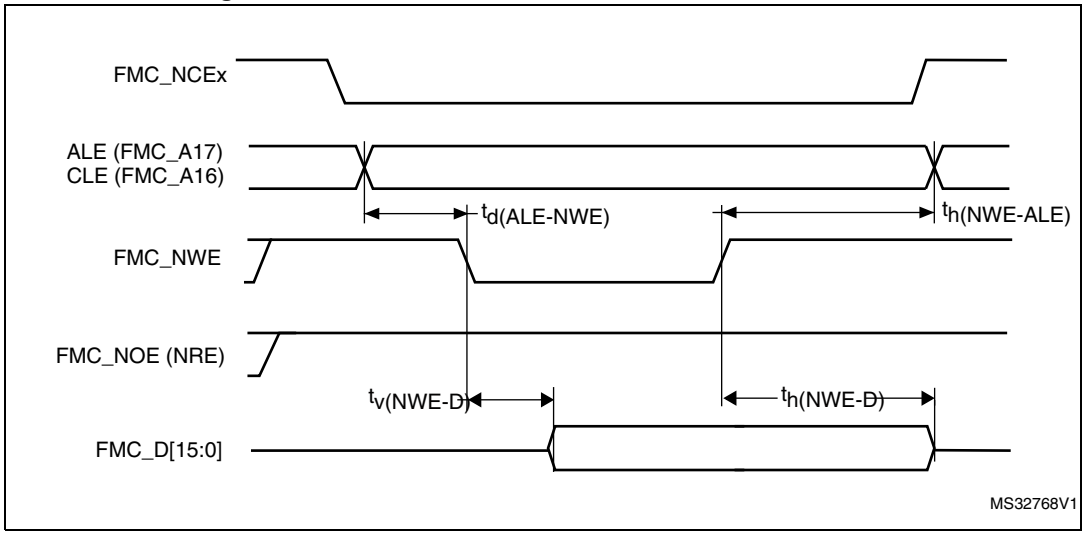

Figure 60. NAND controller waveforms for common memory read access

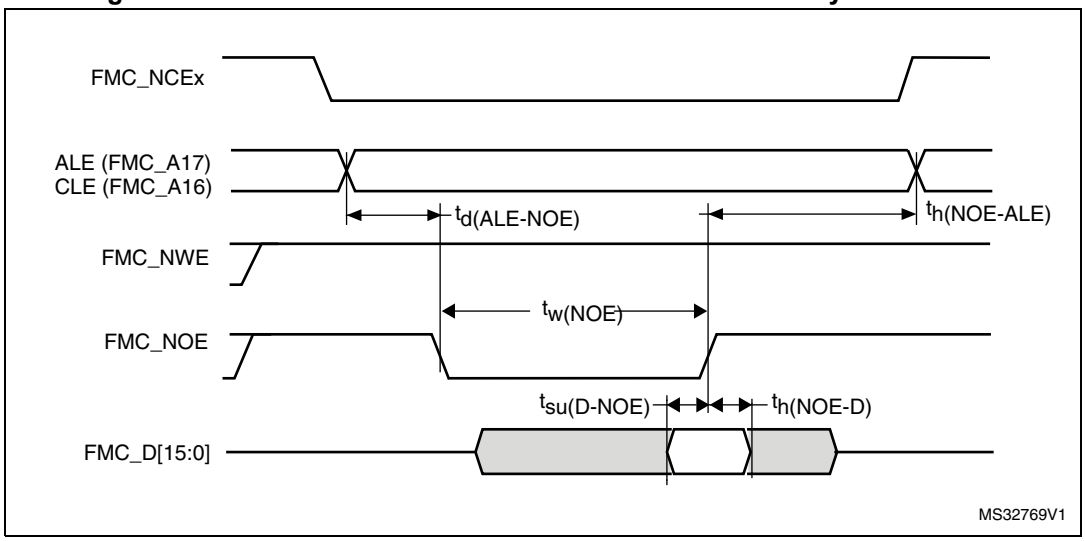

Figure 61. NAND controller waveforms for common memory write access

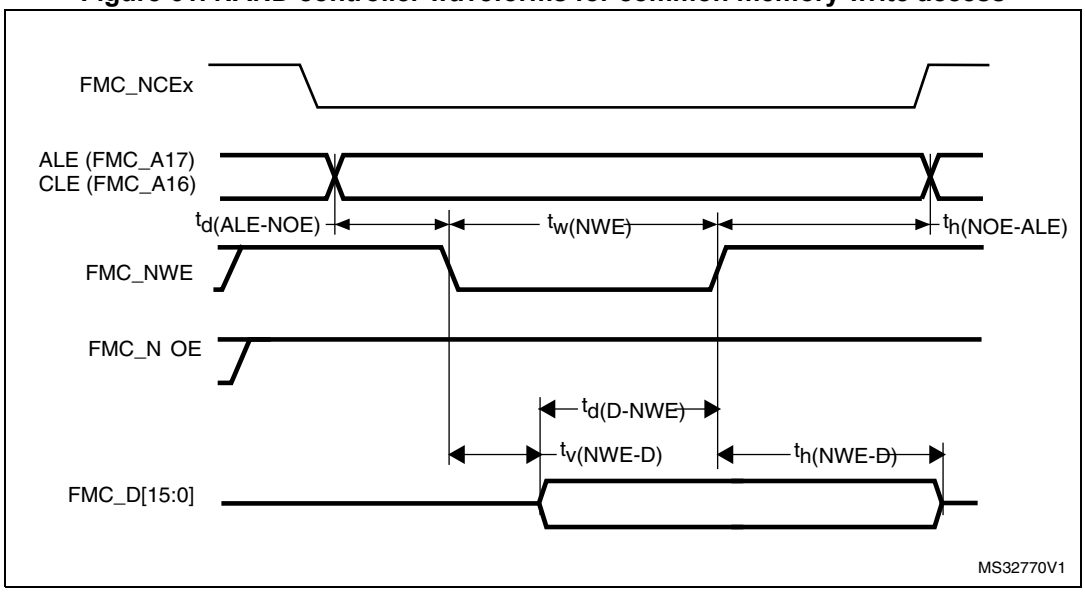

Table 98. Switching characteristics for NAND Flash read cycles(1)

Symbol	Parameter	Min	Max	Unit
$t_{w(N0E)}$	FMC_NOE low width	$4T_{HCLK} - 0.5$	$4T_{HCLK} + 0.5$	ns
$t_{su(D-NOE)}$	FMC_D[15-0] valid data before FMC_NOE high	9	-	
$t_{h(NOE-D)}$	FMC_D[15-0] valid data after FMC_NOE high	2.5	-	
$t_{d(ALE-NOE)}$	FMC_ALE valid before FMC_NOE low	-	$3T_{HCLK} - 0.5$	
$t_{h(NOE-ALE)}$	FMC_NWE high to FMC_ALE invalid	$3T_{HCLK} - 2$	-	

1. C_L = 30 pF.

Table 99. Switching characteristics for NAND Flash write cycles(1)

Symbol	Parameter	Min	Max	Unit
$t_{w(NWE)}$	FMC_NWE low width	$4T_{HCLK}$ - 2	$4T_{HCLK}$	ns
$t_{v(NWE-D)}$	FMC_NWE low to FMC_D[15-0] valid	0	-	ns
$t_{h(NWE-D)}$	FMC_NWE high to FMC_D[15-0] invalid	$3T_{HCLK}$ – 1	-	ns
$t_{d(D-NWE)}$	FMC_D[15-0] valid before FMC_NWE high	$5T_{HCLK}$ – 3	-	ns
$t_{d(ALE-NWE)}$	FMC_ALE valid before FMC_NWE low	-	$3T_{HCLK}$ - 0.5	ns
$t_{h(NWE-ALE)}$	FMC_NWE high to FMC_ALE invalid	$3T_{HCLK}$ – 2	-	ns

1. C_L = 30 pF.

SDRAM waveforms and timings

Figure 62. SDRAM read access waveforms (CL = 1)

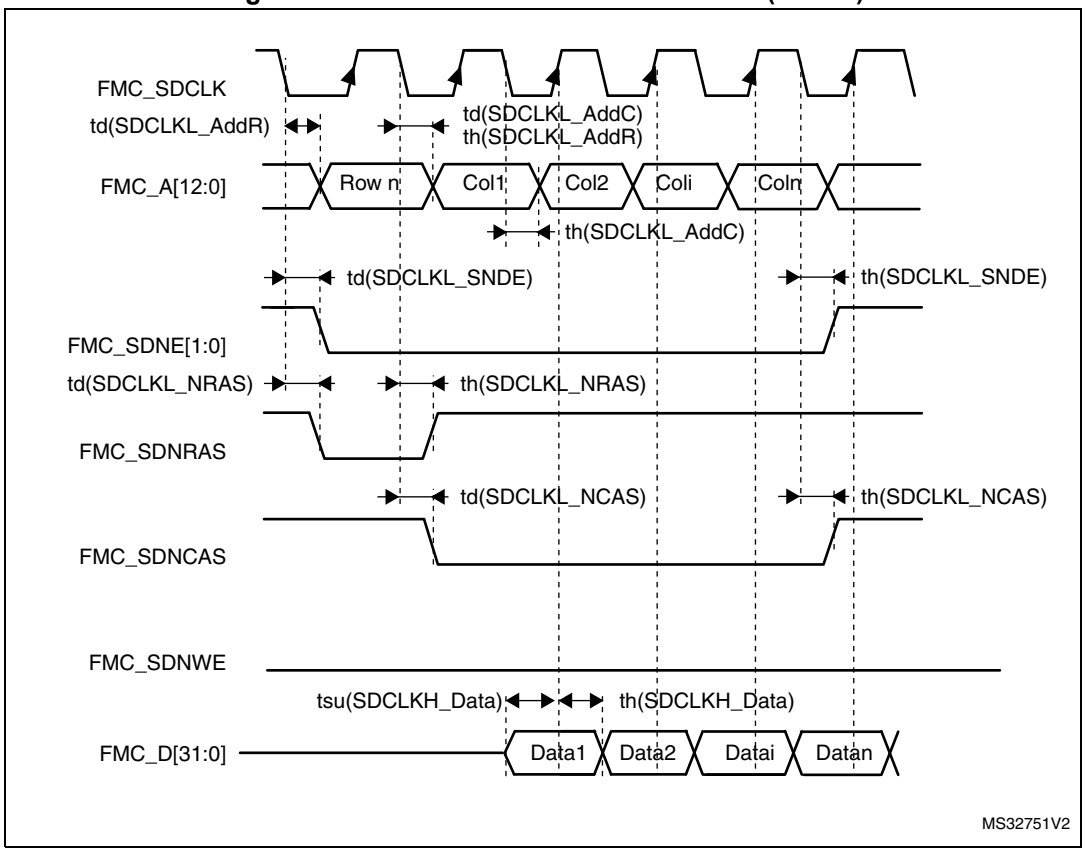

Table 100. SDRAM read timings(1)(2)

Symbol	Parameter	Min	Max	Unit
$t_{w(SDCLK)}$	FMC_SDCLK period	$2T_{HCLK}$-0.5	$2T_{HCLK}$+0.5	ns
$t_{su(SDCLKH_Data)}$	Data input setup time	1	-	
$t_{h(SDCLKH_Data)}$	Data input hold time	4	-	
$t_{d(SDCLKL_Add)}$	Address valid time	-	3	
$t_{d(SDCLKL_SDNE)}$	Chip select valid time	-	1.5	
$t_{h(SDCLKL_SDNE)}$	Chip select hold time	0	-	
$t_{d(SDCLKL_SDNRAS)}$	SDNRAS valid time	-	1.5	
$t_{h(SDCLKL_SDNRAS)}$	SDNRAS hold time	0	-	
$t_{d(SDCLKL_SDNCAS)}$	SDNCAS valid time	-	0.5	
$t_{h(SDCLKL_SDNCAS)}$	SDNCAS hold time	0	-	

1. CL = 30 pF on data and address lines. CL=15pF on FMC_SDCLK.
2. Guaranteed based on test during characterization.

Table 101. LPSDR SDRAM read timings(1)(2)

Symbol	Parameter	Min	Max	Unit
$t_{w(SDCLK)}$	FMC_SDCLK period	$2T_{HCLK}$ - 0.5	$2T_{HCLK}$ + 0.5	ns
$t_{su(SDCLKH_Data)}$	Data input setup time	1	-	
$t_{h(SDCLKH_Data)}$	Data input hold time	5	-	
$t_{d(SDCLKL_Add)}$	Address valid time	-	3	
$t_{d(SDCLKL_SDNE)}$	Chip select valid time	-	3	
$t_{h(SDCLKL_SDNE)}$	Chip select hold time	0	-	
$t_{d(SDCLKL_SDNRAS)}$	SDNRAS valid time	-	2	
$t_{h(SDCLKL_SDNRAS)}$	SDNRAS hold time	0	-	
$t_{d(SDCLKL_SDNCAS)}$	SDNCAS valid time	-	2	
$t_{h(SDCLKL_SDNCAS)}$	SDNCAS hold time	0	-	

1. CL = 10 pF.
2. Guaranteed based on test during characterization.

Figure 63. SDRAM write access waveforms

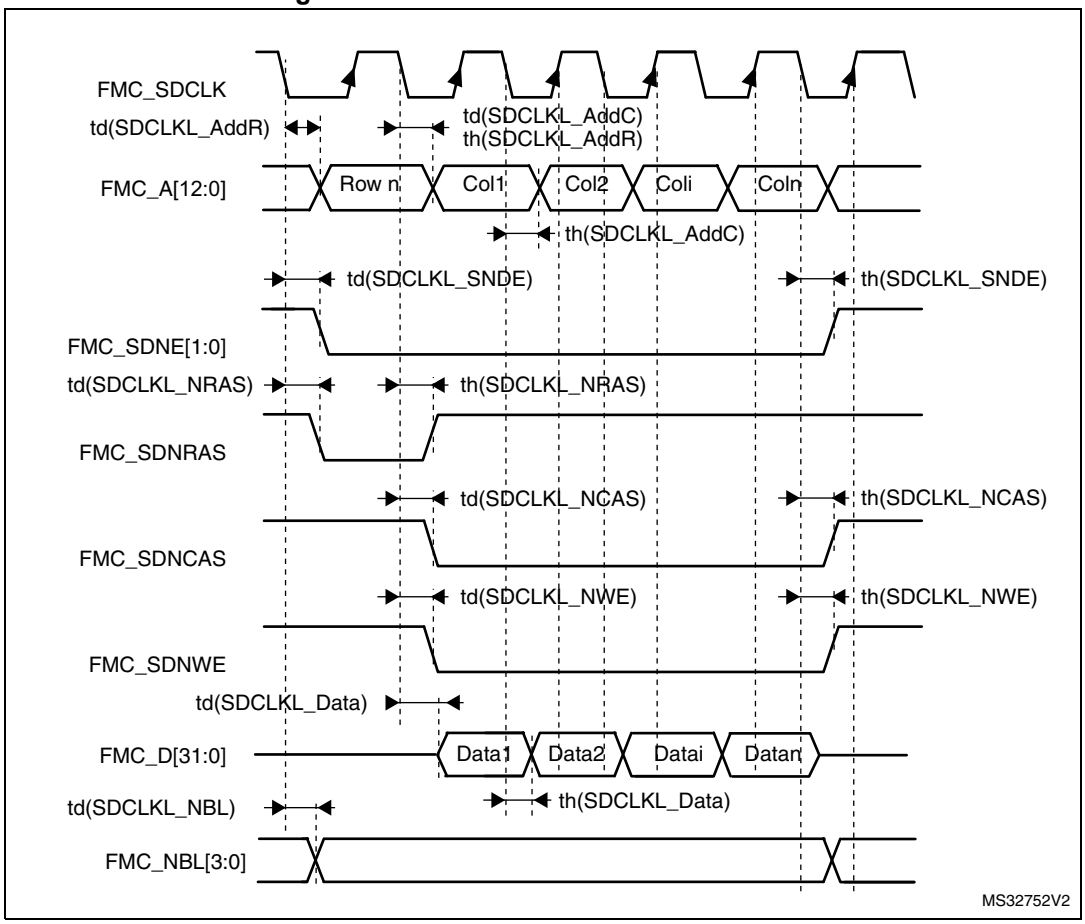

Table 102. SDRAM write timings(1)(2)

Symbol	Parameter	Min	Max	Unit
$F_{(SDCLK)}$	Frequency of operation	-	90	MHz
$t_{w(SDCLK)}$	FMC_SDCLK period	$2T_{HCLK}$ - 0.5	$2T_{HCLK}$ + 0.5	ns
$t_{d(SDCLKL_Data)}$	Data output valid time	-	2	
$t_{h(SDCLKL_Data)}$	Data output hold time	0.5	-	
$t_{d(SDCLK_Add)}$	Address valid time	-	3	
$t_{d(SDCLKL_SDNWE))}$	SDNWE valid time	-	1.5	
$t_{h(SDCLKL_SDNWE))}$	SDNWE hold time	0	-	
$t_{d(SDCLKL_SDNE))}$	Chip select valid time	-	1.5	
$t_{h(SDCLKL_SDNE)}$	Chip select hold time	0	-	
$t_{d(SDCLKL_SDNRAS)}$	SDNRAS valie time	-	1	
$t_{h(SDCLKL_SDNRAS)}$	SDNRAS hold time	0	-	
$t_{d(SDCLKL_SDNCAS)}$	SDNCAS valid time	-	1	
$t_{h(SDCLKL_SDNCAS)}$	SDNCAS hold time	0	-	

1. C_L = 10 pF on data and address line. C_L=15 pF on FMC_SDCLK.
2. Guaranteed based on test during characterization.

Table 103. LPSDR SDRAM write timings(1)(2)

Symbol	Parameter	Min	Max	Unit
$F_{(SDCLK)}$	Frequency of operation	-	84	MHz
$t_{w(SDCLK)}$	FMC_SDCLK period	$2T_{HCLK}$ - 0.5	$2T_{HCLK}$ + 0.5	ns
$t_{d(SDCLKL_Data)}$	Data output valid time	-	5	
$t_{h(SDCLKL_Data)}$	Data output hold time	0.5	-	
$t_{d(SDCLK_Add)}$	Address valid time	-	3	
$t_{d(SDCLKL_SDNWE))}$	SDNWE valid time	-	3	
$t_{h(SDCLKL_SDNWE))}$	SDNWE hold time	0	-	
$t_{d(SDCLKL_SDNE))}$	Chip select valid time	-	2.5	
$t_{h(SDCLKL_SDNE)}$	Chip select hold time	0	-	
$t_{d(SDCLKL_SDNRAS)}$	SDNRAS valid time	-	2	
$t_{h(SDCLKL_SDNRAS)}$	SDNRAS hold time	0	-	
$t_{d(SDCLKL_SDNCAS)}$	SDNCAS valid time	-	2	
$t_{d(SDCLKL_SDNCAS)}$	SDNCAS hold time	0	-	

1. CL = 10 pF.
2. Guaranteed based on test during characterization.

6.3.27 Camera interface (DCMI) timing specifications

Unless otherwise specified, the parameters given in *Table 104* for DCMI are derived from tests performed under the ambient temperature, f_{HCLK} frequency and V_{DD} supply voltage summarized in *Table 16*, with the following configuration:

- DCMI_PIXCLK polarity: falling
- DCMI_VSYNC and DCMI_HSYNC polarity: high
- Data formats: 14 bits

Table 104. DCMI characteristics

Symbol	Parameter	Min	Max	Unit
-	Frequency ratio DCMI_PIXCLK/f_{HCLK}	-	0.4	-
DCMI_PIXCLK	Pixel clock input	-	54	MHz
D_{Pixel}	Pixel clock input duty cycle	30	70	%
$t_{su(DATA)}$	Data input setup time	1	-	ns
$t_{h(DATA)}$	Data input hold time	3.5	-	
$t_{su(HSYNC)}$ $t_{su(VSYNC)}$	DCMI_HSYNC/DCMI_VSYNC input setup time	2	-	
$t_{h(HSYNC)}$ $t_{h(VSYNC)}$	DCMI_HSYNC/DCMI_VSYNC input hold time	0	-	

Figure 64. DCMI timing diagram

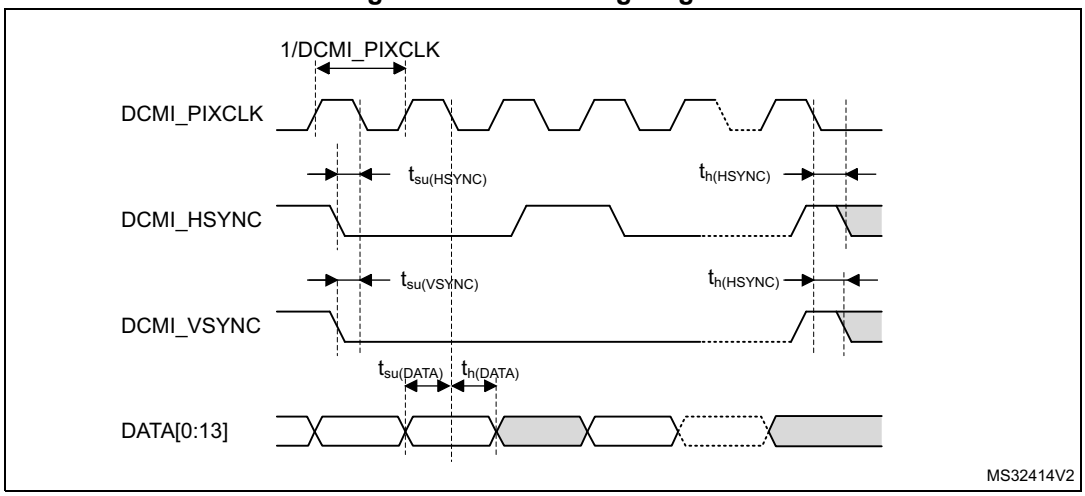

6.3.28 SD/SDIO MMC card host interface (SDIO) characteristics

Unless otherwise specified, the parameters given in *Table 105* for the SDIO are derived from tests performed under the ambient temperature, f_{PCLK2} frequency and V_{DD} supply voltage conditions summarized in *Table 16*, with the following configuration:

- Output speed is set to OSPEEDRy[1:0] = 10
- Capacitive load C = 30 pF
- Measurement points are done at CMOS levels: $0.5V_{DD}$

Refer to *Section 6.3.17: I/O port characteristics* for more details on the input/output characteristics.

Figure 65. SDIO high-speed mode

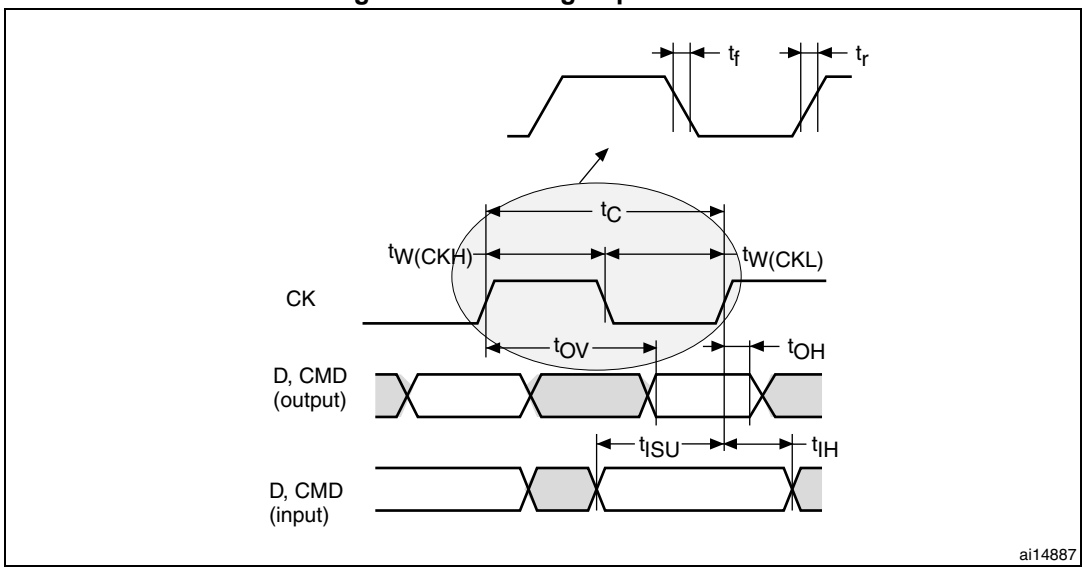

Figure 66. SD default mode

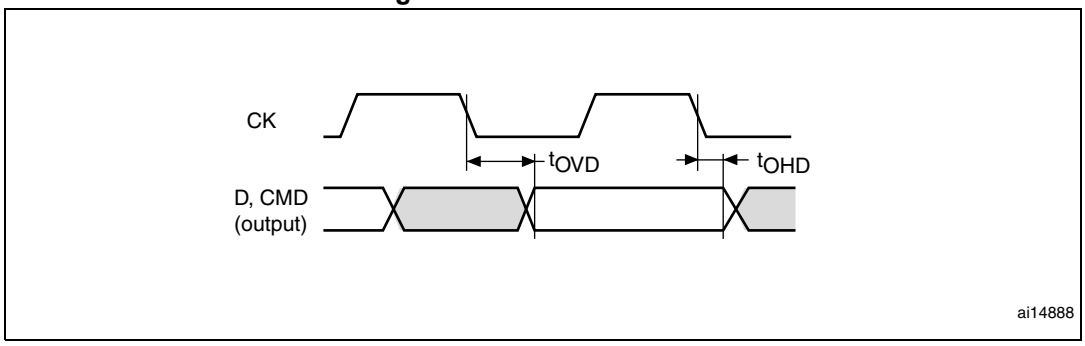

Table 105. Dynamic characteristics: SD / MMC characteristics(1)(2)

Symbol	Parameter	Conditions	Min	Typ	Max	Unit
f_{PP}	Clock frequency in data transfer mode	-	0	-	50	MHz
-	SDIO_CK/fPCLK2 frequency ratio	-	-	-	8/3	-
$t_{W(CKL)}$	Clock low time	fpp =50MHz	9.5	10.5	-	ns
$t_{W(CKH)}$	Clock high time	fpp =50MHz	8.5	9.5	-	
CMD, D inputs (referenced to CK) in MMC and SD HS mode						
t_{ISU}	Input setup time HS	fpp =50MHz	1	-	-	ns
t_{IH}	Input hold time HS	fpp =50MHz	4.5	-	-	
CMD, D outputs (referenced to CK) in MMC and SD HS mode						
t_{OV}	Output valid time HS	fpp =50MHz	-	12.5	13	ns
t_{OH}	Output hold time HS	fpp =50MHz	11	-	-	
CMD, D inputs (referenced to CK) in SD default mode						
t_{ISUD}	Input setup time SD	fpp =25MHz	2.5	-	-	ns
t_{IHD}	Input hold time SD	fpp =25MHz	5.5	-	-	
CMD, D outputs (referenced to CK) in SD default mode						
t_{OVD}	Output valid default time SD	fpp =24MHz	-	3.5	4	ns
t_{OHD}	Output hold default time SD	fpp =24MHz	2	-	-	

1. Guaranteed based on test during characterization.
2. V_{DD} = 2.7 to 3.6 V.

Table 106. Dynamic characteristics: eMMC characteristics V_{DD} = 1.7 V to 1.9 V(1)(2)

Symbol	Parameter	Conditions	Min	Typ	Max	Unit
f_{PP}	Clock frequency in data transfer mode	-	0	-	50	MHz
-	SDIO_CK/fPCLK2 frequency ratio	-	-	-	8/3	-
$t_{W(CKL)}$	Clock low time	fpp =50MHz	9.5	10.5	-	ns
$t_{W(CKH)}$	Clock high time	fpp =50MHz	8.5	9.5	-	
CMD, D inputs (referenced to CK) in eMMC mode						
t_{ISU}	Input setup time HS	fpp =50MHz	0.5	-	-	ns
t_{IH}	Input hold time HS	fpp =50MHz	7.5	-	-	
CMD, D outputs (referenced to CK) in eMMC mode						
t_{OV}	Output valid time HS	fpp =50MHz	-	13.5	14.5	ns
t_{OH}	Output hold time HS	fpp =50MHz	12	-	-	

1. Guaranteed based on test during characterization.
2. V_{DD} = 2.7 to 3.6 V.

6.3.29 RTC characteristics

Table 107. RTC characteristics

Symbol	Parameter	Conditions	Min	Max
-	f_{PCLK1}/RTCCLK frequency ratio	Any read/write operation from/to an RTC register	4	-

7 Package information

In order to meet environmental requirements, ST offers these devices in different grades of ECOPACK® packages, depending on their level of environmental compliance. ECOPACK® specifications, grade definitions and product status are available at: *www.st.com*. ECOPACK® is an ST trademark.

7.1 LQFP64 package information

Figure 67. LQFP64-10x10 mm 64 pin low-profile quad flat package outline

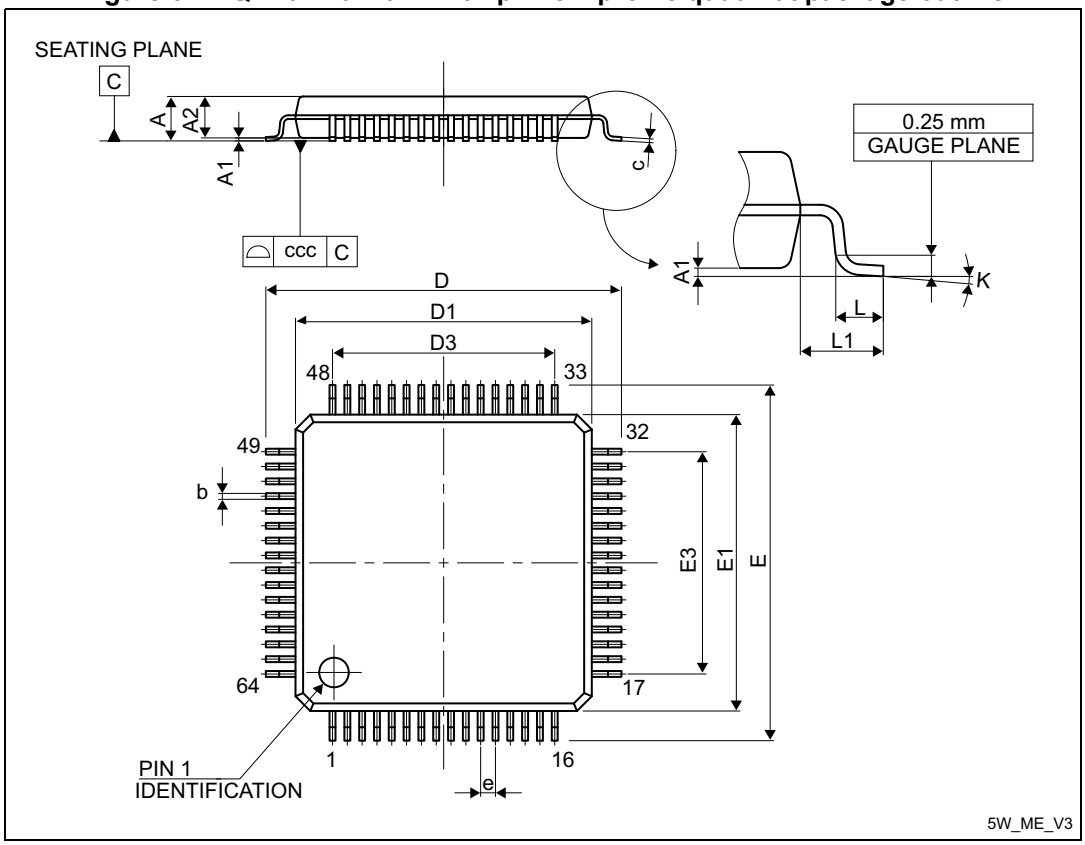

1. Drawing is not to scale

Table 108. LQFP64 – 10 x 10 mm low-profile quad flat package mechanical data

Symbol	millimeters			inches(1)		
	Min	Typ	Max	Min	Typ	Max
A	-	-	1.600	-	-	0.0630
A1	0.050	-	0.150	0.0020	-	0.0059
A2	1.350	1.400	1.450	0.0531	0.0551	0.0571
b	0.170	0.220	0.270	0.0067	0.0087	0.0106
c	0.090	-	0.200	0.0035	-	0.0079

Table 108. LQFP64 – 10 x 10 mm low-profile quad flat package mechanical data (continued)

Symbol	millimeters			inches(1)		
	Min	Typ	Max	Min	Typ	Max
D	11.800	12.000	12.200	0.4646	0.4724	0.4803
D1	9.800	10.000	10.200	0.3858	0.3937	0.4016
D3	-	7.500	-	-	0.2953	-
E	11.800	12.000	12.200	0.4646	0.4724	0.4803
E1	9.800	10.000	10.200	0.3858	0.3937	0.4016
E3	-	7.500	-	-	0.2953	-
e	-	0.500	-	-	0.0197	-
L	0.450	0.600	0.750	0.0177	0.0236	0.0295
L1	-	1.000	-	-	0.0394	-
K	0°	3.5°	7°	0°	3.5°	7°
ccc	-	-	0.080	-	-	0.0031

1. Values in inches are converted from mm and rounded to 4 decimal digits.

Figure 68. LQFP64 Recommended footprint

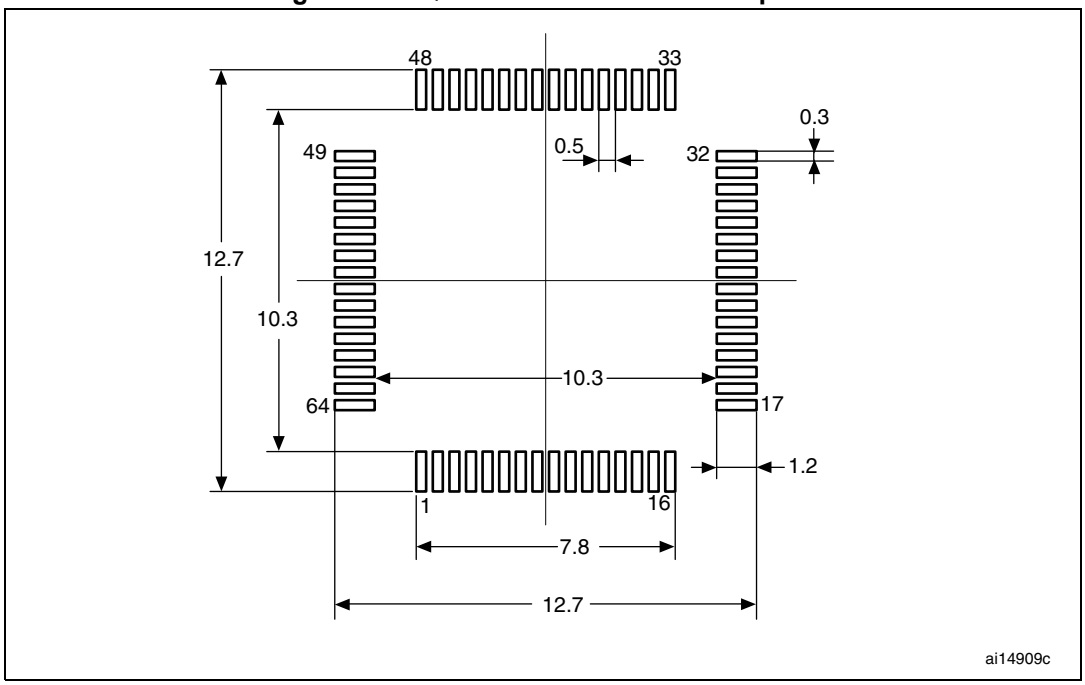

1. Drawing is not to scale.
2. Dimensions are in millimeters.

Device marking for LQFP64

The following figure gives an example of topside marking orientation versus pin 1 identifier location.

Other optional marking or inset/upset marks, which identify the parts throughout supply chain operations, are not indicated below.

Figure 69. LQFP64 marking example (package top view)

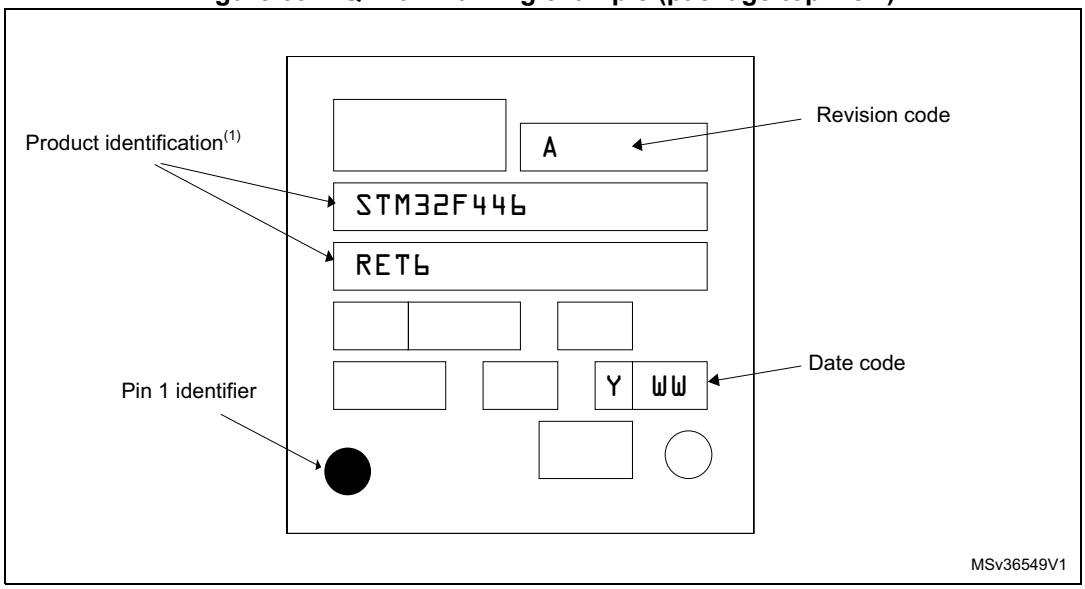

1. Parts marked as “ES”, "E" or accompanied by an Engineering Sample notification letter, are not yet qualified and therefore not yet ready to be used in production and any consequences deriving from such usage will not be at ST charge. In no event ST will be liable for any customer usage of these engineering samples in production. ST Quality has to be contacted prior to any decision to use these Engineering samples to run qualification activity.

7.2 LQFP100 package information

Figure 70. LQFP100, 14 x 14 mm 100-pin low-profile quad flat package outline

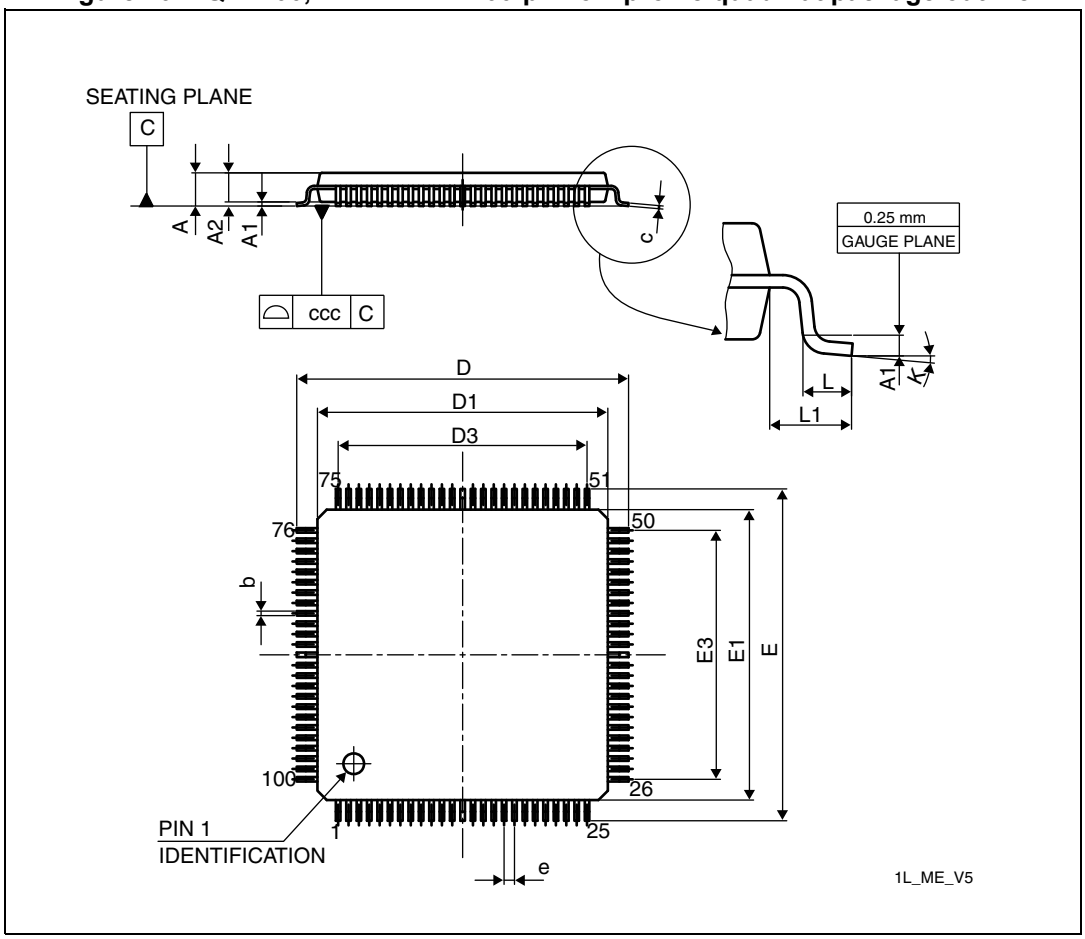

1. Drawing is not to scale.

Table 109. LQPF100, 14 x 14 mm 100-pin low-profile quad flat package mechanical data

Symbol	millimeters			inches(1)		
	Min	Typ	Max	Min	Typ	Max
A	-	-	1.600	-	-	0.0630
A1	0.050	-	0.150	0.0020	-	0.0059
A2	1.350	1.400	1.450	0.0531	0.0551	0.0571
b	0.170	0.220	0.270	0.0067	0.0087	0.0106
c	0.090	-	0.200	0.0035	-	0.0079
D	15.800	16.000	16.200	0.6220	0.6299	0.6378
D1	13.800	14.000	14.200	0.5433	0.5512	0.5591
D3	-	12.000	-	-	0.4724	-
E	15.800	16.000	16.200	0.6220	0.6299	0.6378

Table 109. LQPF100, 14 x 14 mm 100-pin low-profile quad flat package mechanical data (continued)

Symbol	millimeters			inches[1]		
	Min	Typ	Max	Min	Typ	Max
E1	13.800	14.000	14.200	0.5433	0.5512	0.5591
E3	-	12.000	-	-	0.4724	-
e	-	0.500	-	-	0.0197	-
L	0.450	0.600	0.750	0.0177	0.0236	0.0295
L1	-	1.000	-	-	0.0394	-
k	0°	3.5°	7°	0°	3.5°	7°
ccc	-	-	0.080	-	-	0.0031

1. Values in inches are converted from mm and rounded to 4 decimal digits.

Figure 71. LQFP100 - 100-pin, 14 x 14 mm low-profile quad flat recommended footprint

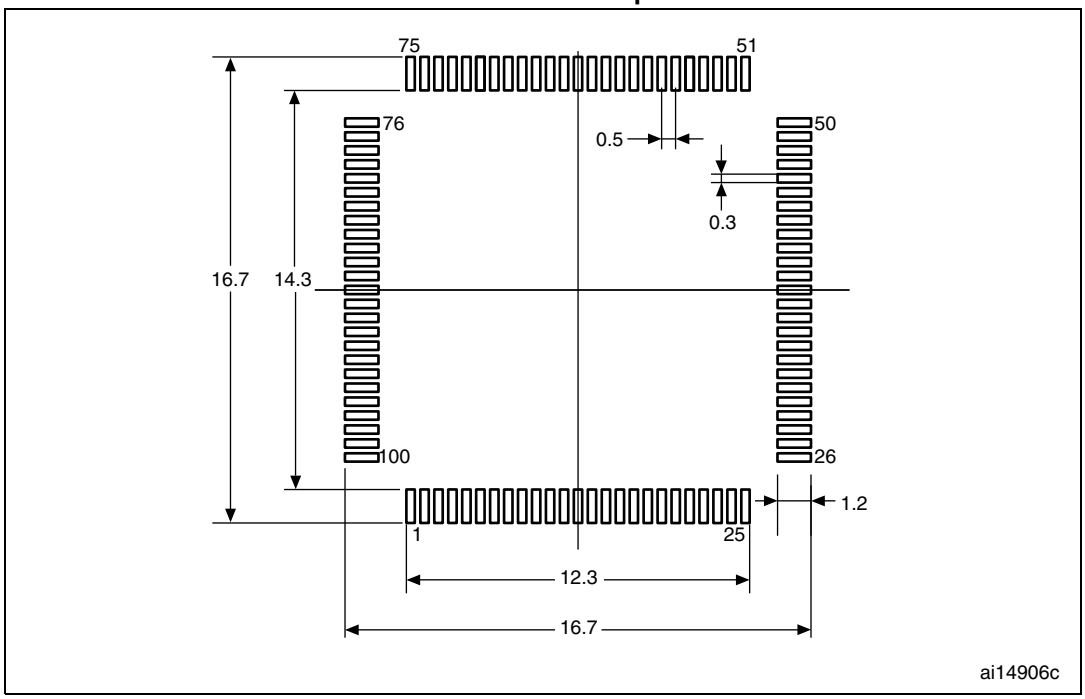

1. Dimensions are expressed in millimeters.

Device marking for LQFP100 package

The following figure gives an example of topside marking orientation versus pin 1 identifier location.

Other optional marking or inset/upset marks, which identify the parts throughout supply chain operations, are not indicated below.

Figure 72. LQFP100 marking example (package top view)

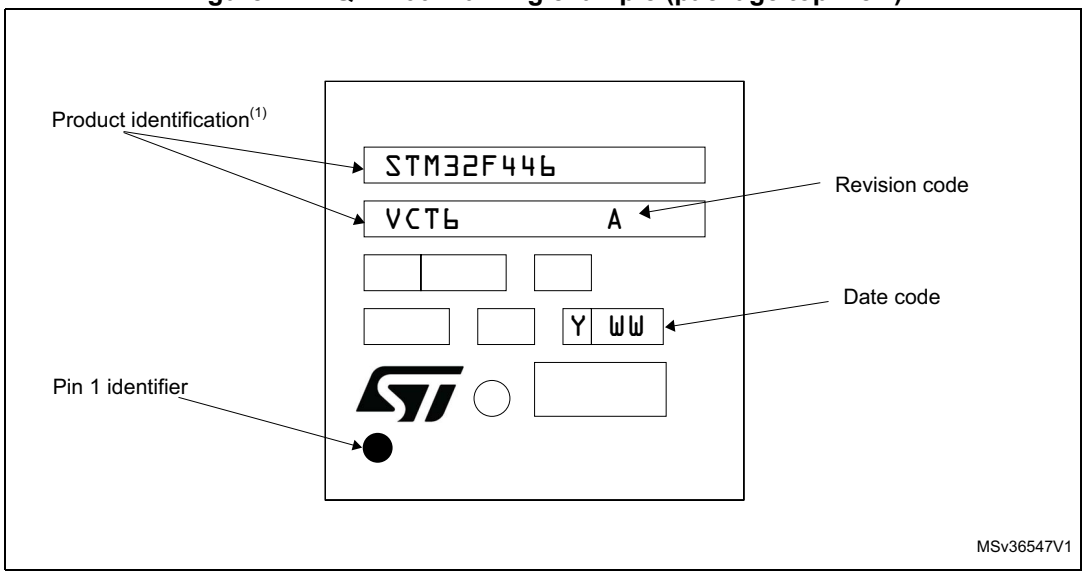

1. Parts marked as “ES”, “E” or accompanied by an Engineering Sample notification letter, are not yet qualified and therefore not yet ready to be used in production and any consequences deriving from such usage will not be at ST charge. In no event ST will be liable for any customer usage of these engineering samples in production. ST Quality has to be contacted prior to any decision to use these Engineering samples to run qualification activity.

7.3 LQFP144 package information.

Figure 73. LQFP144, 20 x 20 mm, 144-pin low-profile quad flat package outline

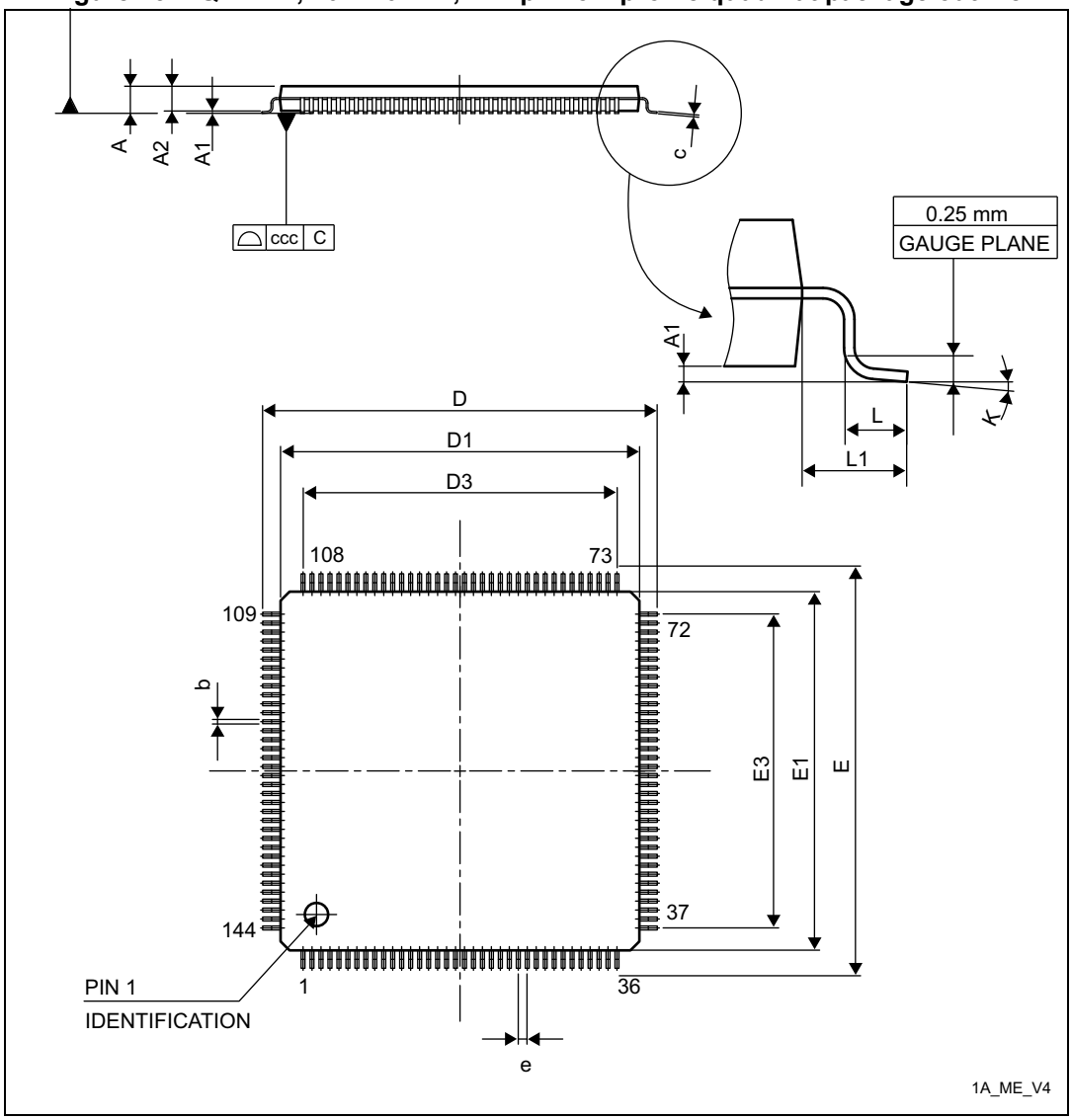

1. Drawing is not to scale.

Table 110. LQFP144, 20 x 20 mm, 144-pin low-profile quad flat package mechanical data

Symbol	millimeters			inches[1]		
	Min	Typ	Max	Min	Typ	Max
A	-	-	1.600	-	-	0.0630
A1	0.050	-	0.150	0.0020	-	0.0059
A2	1.350	1.400	1.450	0.0531	0.0551	0.0571
b	0.170	0.220	0.270	0.0067	0.0087	0.0106
c	0.090	-	0.200	0.0035	-	0.0079
D	21.800	22.000	22.200	0.8583	0.8661	0.874
D1	19.800	20.000	20.200	0.7795	0.7874	0.7953
D3	-	17.500	-	-	0.689	-
E	21.800	22.000	22.200	0.8583	0.8661	0.8740
E1	19.800	20.000	20.200	0.7795	0.7874	0.7953
E3	-	17.500	-	-	0.6890	-
e	-	0.500	-	-	0.0197	-
L	0.450	0.600	0.750	0.0177	0.0236	0.0295
L1	-	1.000	-	-	0.0394	-
k	0°	3.5°	7°	0°	3.5°	7°
ccc	-	-	0.080	-	-	0.0031

1. Values in inches are converted from mm and rounded to 4 decimal digits.

Figure 74. LQFP144 recommended footprint

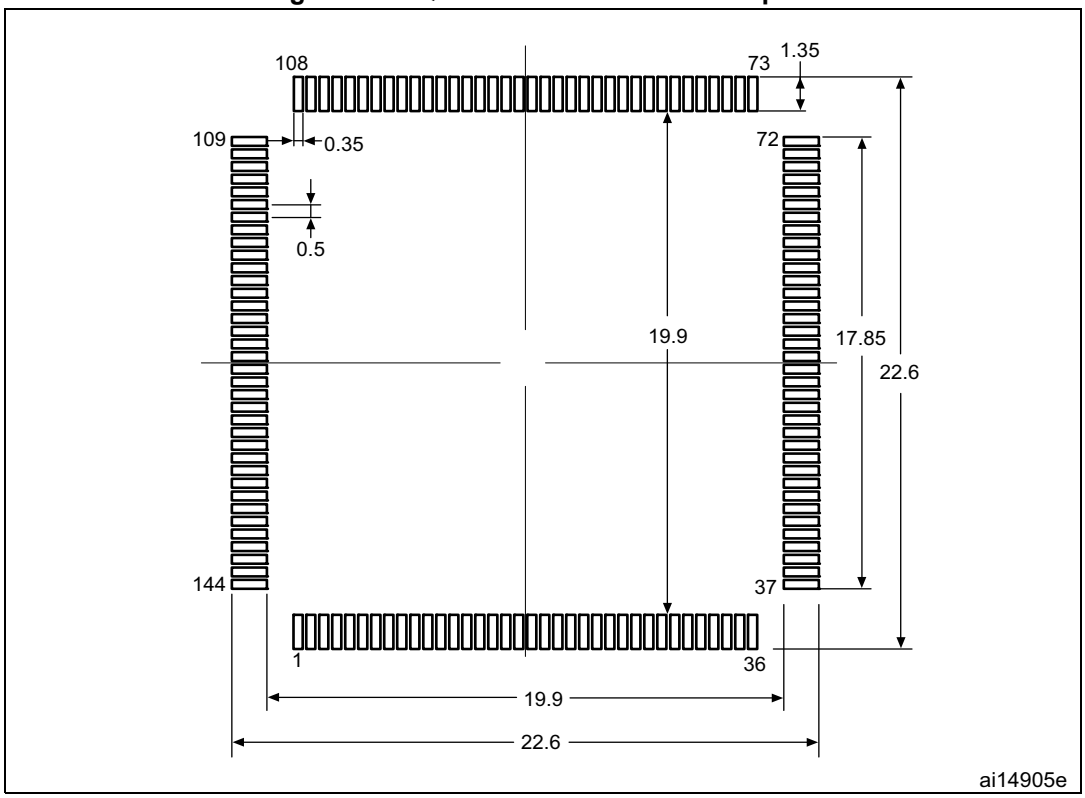

1. Dimensions are expressed in millimeters.

Device marking for LQFP144 package

The following figure gives an example of topside marking orientation versus pin 1 identifier location.

Other optional marking or inset/upset marks, which identify the parts throughout supply chain operations, are not indicated below.

Figure 75. LQFP144 marking example (package top view)

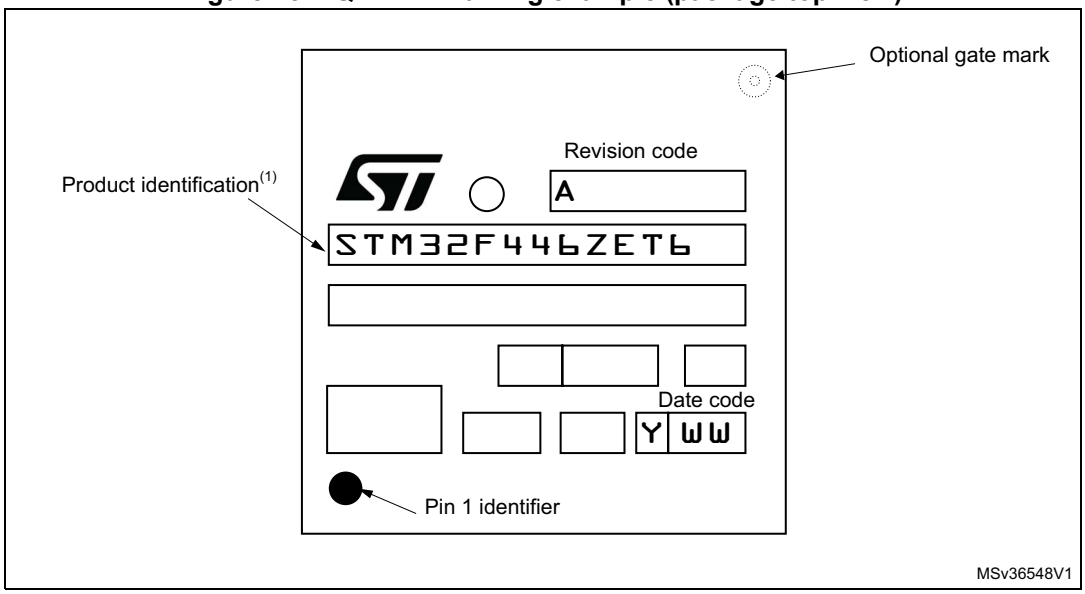

1. Parts marked as “ES”, “E” or accompanied by an Engineering Sample notification letter, are not yet qualified and therefore not yet ready to be used in production and any consequences deriving from such usage will not be at ST charge. In no event ST will be liable for any customer usage of these engineering samples in production. ST Quality has to be contacted prior to any decision to use these Engineering samples to run qualification activity.

7.4 UFBGA144 7 x 7 mm package information

Figure 76. UFBGA144 - 144-pin, 7 x 7 mm, 0.50 mm pitch, ultra fine pitch ball grid array package outline

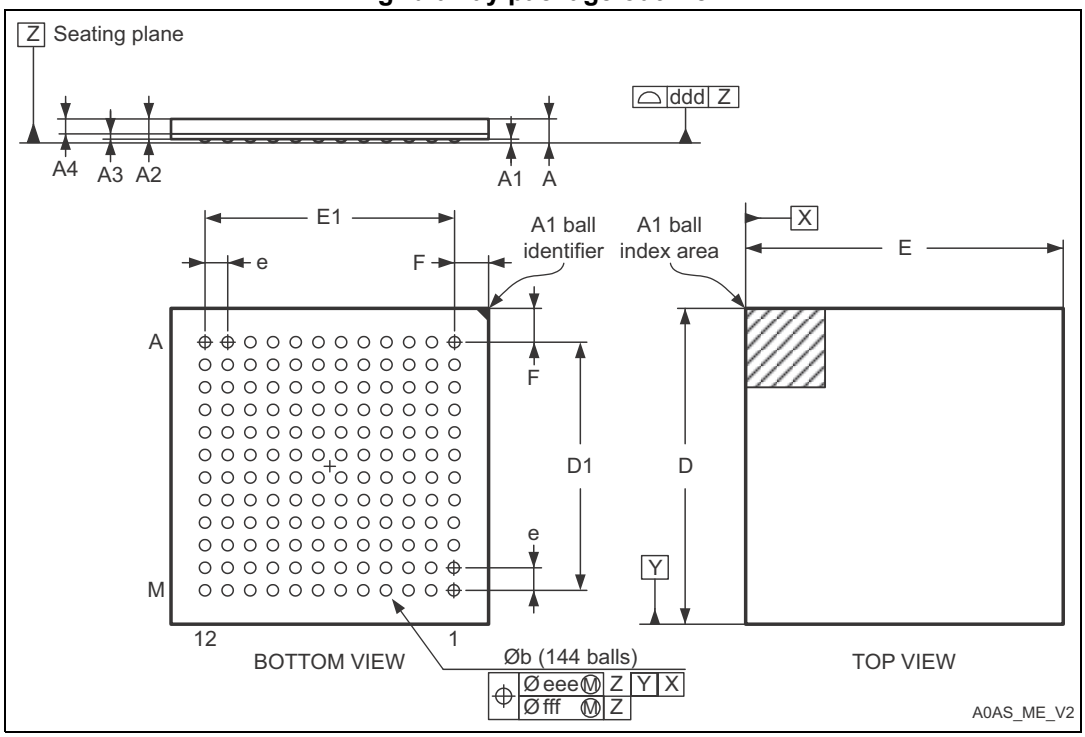

1. Drawing is not in scale.

Table 111. UFBGA144 - 144-pin, 7 x 7 mm, 0.50 mm pitch, ultra fine pitch ball grid array package mechanical data

Symbol	millimeters			inches(1)		
	Min.	Typ.	Max.	Min.	Typ.	Max.
A	0.460	0.530	0.600	0.0181	0.0209	0.0236
A1	0.050	0.080	0.110	0.0020	0.0031	0.0043
A2	0.400	0.450	0.500	0.0157	0.0177	0.0197
A3	-	0.130	-	-	0.0051	-
A4	0.270	0.320	0.370	0.0106	0.0126	0.0146
b	0.230	0.280	0.320	0.0091	0.0110	0.0126
D	6.950	7.000	7.050	0.2736	0.2756	0.2776
D1	5.450	5.500	5.550	0.2146	0.2165	0.2185
E	6.950	7.000	7.050	0.2736	0.2756	0.2776
E1	5.450	5.500	5.550	0.2146	0.2165	0.2185
e	-	0.500	-	-	0.0197	-
F	0.700	0.750	0.800	0.0276	0.0295	0.0315

Table 111. UFBGA144 - 144-pin, 7 x 7 mm, 0.50 mm pitch, ultra fine pitch ball grid array package mechanical data (continued)

Symbol	millimeters			inches[1]		
	Min.	Typ.	Max.	Min.	Typ.	Max.
ddd	-	-	0.100	-	-	0.0039
eee	-	-	0.150	-	-	0.0059
fff	-	-	0.050	-	-	0.0020

1. Values in inches are converted from mm and rounded to 4 decimal digits.

Figure 77. UFBGA144 - 144-ball, 7 x 7 mm, 0.50 mm pitch, ultra fine pitch ball grid array package recommended footprint

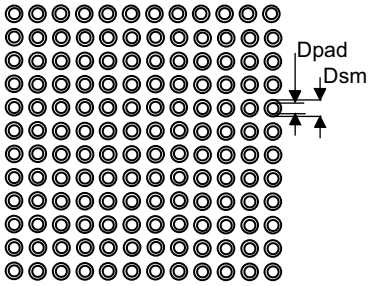

Table 112. UFBGA144 recommended PCB design rules (0.50 mm pitch BGA)

Dimension	Recommended values
Pitch	0.50 mm
Dpad	0.280 mm
Dsm	0.370 mm typ. (depends on the soldermask registration tolerance)
Stencil opening	0.280 mm
Stencil thickness	Between 0.100 mm and 0.125 mm
Pad trace width	0.120 mm

Device marking for UFBGA144 7 x 7 mm package

The following figure gives an example of topside marking orientation versus pin 1 identifier location.

Other optional marking or inset/upset marks, which identify the parts throughout supply chain operations, are not indicated below.

Figure 78. UQFP144 7 x 7 mm marking example (package top view)

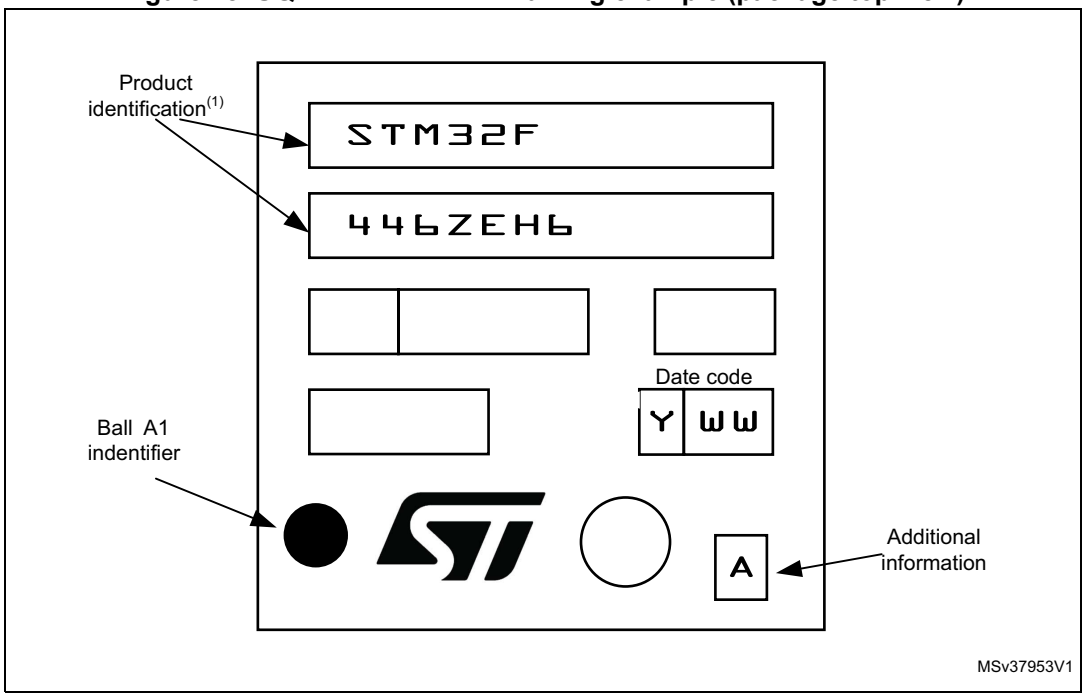

1. Parts marked as “ES”, “E” or accompanied by an Engineering Sample notification letter, are not yet qualified and therefore not yet ready to be used in production and any consequences deriving from such usage will not be at ST charge. In no event ST will be liable for any customer usage of these engineering samples in production. ST Quality has to be contacted prior to any decision to use these Engineering samples to run qualification activity.

7.5 UFBGA144 10 x 10 mm package information

Figure 79. UFBGA144 - 144-pin, 10 x 10 mm, 0.80 mm pitch, ultra fine pitch ball grid array package outline

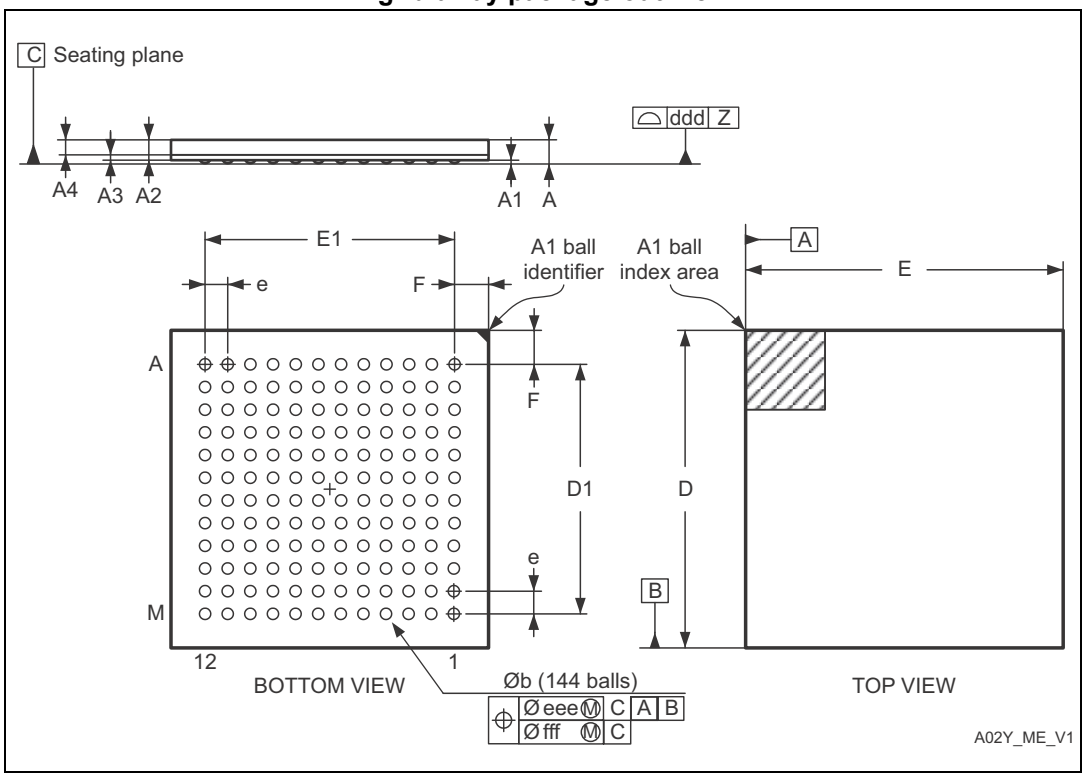

1. Drawing is not to scale.

Table 113. UFBGA144 - 144-pin, 10 x 10 mm, 0.80 mm pitch, ultra fine pitch ball grid array package mechanical data

Symbol	millimeters			inches(1)		
	Min.	Typ.	Max.	Min.	Typ.	Max.
A	0.460	0.530	0.600	0.0181	0.0209	0.0236
A1	0.050	0.080	0.110	0.0020	0.0031	0.0043
A2	0.400	0.450	0.500	0.0157	0.0177	0.0197
A3	0.050	0.080	0.110	-	0.0051	-
A4	0.270	0.320	0.370	0.0106	0.0126	0.0146
b	0.360	0.400	0.440	0.0091	0.0110	0.0130
D	9.950	10.000	10.050	0.2736	0.2756	0.2776
D1	8.750	8.800	8.850	0.2343	0.2362	0.2382
E	9.950	10.000	10.050	0.2736	0.2756	0.2776
E1	8.750	8.800	8.850	0.2343	0.2362	0.2382
e	0.750	0.800	0.850	-	0.0197	-

Table 113. UFBGA144 - 144-pin, 10 x 10 mm, 0.80 mm pitch, ultra fine pitch ball grid array package mechanical data (continued)

Symbol	millimeters			inches(1)		
	Min.	Typ.	Max.	Min.	Typ.	Max.
F	0.550	0.600	0.650	0.0177	0.0197	0.0217
ddd	-	-	0.080	-	-	0.0039
eee	-	-	0.150	-	-	0.0059
fff	-	-	0.080	-	-	0.0020

1. Values in inches are converted from mm and rounded to 4 decimal digits.

Figure 80. UFBGA144 - 144-pin, 10 x 10 mm, 0.80 mm pitch, ultra fine pitch ball grid array package recommended footprint

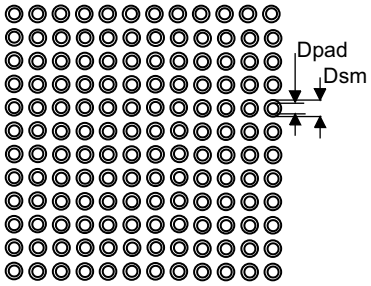

Table 114. UFBGA144 recommended PCB design rules (0.80 mm pitch BGA)

Dimension	Recommended values
Pitch	0.80 mm
Dpad	0.400 mm
Dsm	0.550 mm typ. (depends on the soldermask registration tolerance)
Stencil opening	0.400 mm
Stencil thickness	Between 0.100 mm and 0.125 mm
Pad trace width	0.120 mm

Device marking for UFBGA144 10 x 10 mm package

The following figure gives an example of topside marking orientation versus pin 1 identifier location.

Other optional marking or inset/upset marks, which identify the parts throughout supply chain operations, are not indicated below.

Figure 81. UQFP144 10 x 10 mm marking example (package top view)

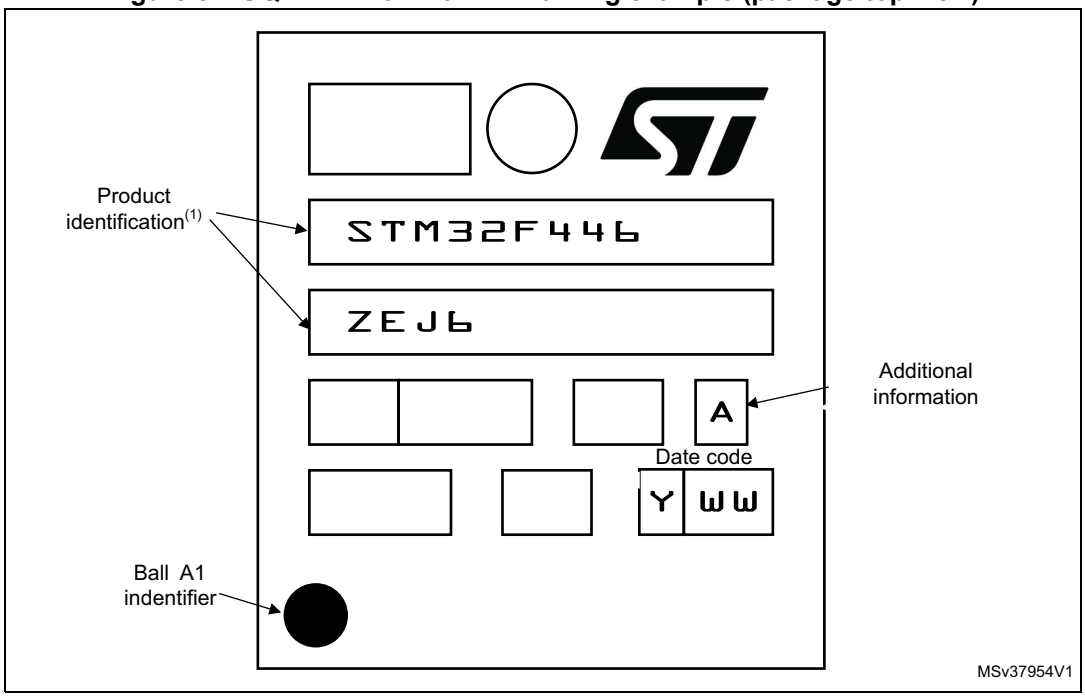

1. Parts marked as “ES”, “E” or accompanied by an Engineering Sample notification letter, are not yet qualified and therefore not yet ready to be used in production and any consequences deriving from such usage will not be at ST charge. In no event ST will be liable for any customer usage of these engineering samples in production. ST Quality has to be contacted prior to any decision to use these Engineering samples to run qualification activity.

7.6 WLCSP81 package information

Figure 82. WLCSP81 - 81-pin, 3.693 x 3.815 mm, 0.4 mm pitch wafer level chip scale package outline

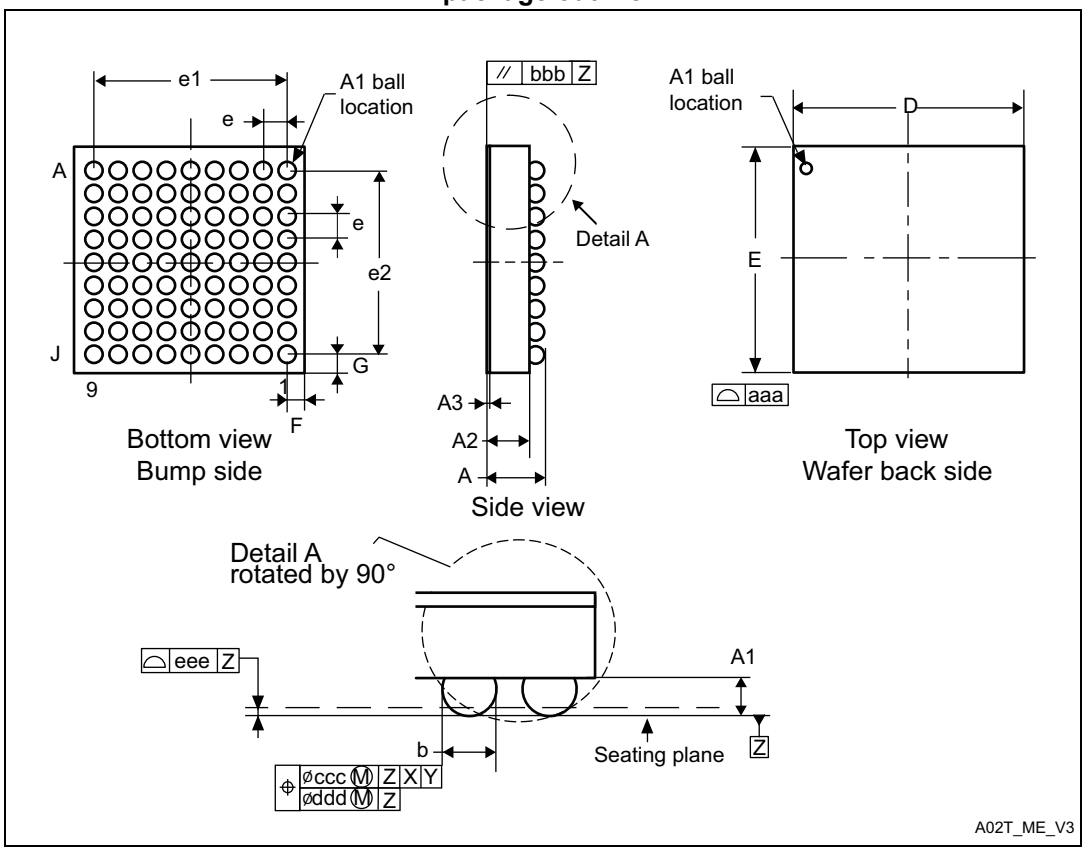

1. Drawing is not to scale.

Table 115. WLCSP81- 81-pin, 3.693 x 3.815 mm, 0.4 mm pitch wafer level chip scale package mechanical data

Symbol	millimeters			inches(1)		
	Min	Typ	Max	Min	Typ	Max
A	-	-	0.600	-	-	0.0236
A1	-	0.170	-	-	0.0067	-
A2	-	0.380	-	-	0.0150	-
A3(2)	-	0.025	-	-	0.0010	-
b(3)	0.220	0.250	0.280	0.0087	0.0098	0.0110
D	3.658	3.693	3.728	0.1440	0.1454	0.1468
E	3.780	3.815	3.850	0.1488	0.1502	0.1516
e	-	0.400	-	-	0.0157	-
e1	-	3.200	-	-	0.1260	-
e2	-	3.200	-	-	0.1260	-

Table 115. WLCSP81- 81-pin, 3.693 x 3.815 mm, 0.4 mm pitch wafer level chip scale package mechanical data (continued)

Symbol	millimeters			inches[1]		
	Min	Typ	Max	Min	Typ	Max
F	-	0.2465	-	-	0.0097	-
G	-	0.3075	-	-	0.0121	-
aaa	-	-	0.100	-	-	0.0039
bbb	-	-	0.100	-	-	0.0039
ccc	-	-	0.100	-	-	0.0039
ddd	-	-	0.050	-	-	0.0020
eee	-	-	0.050	-	-	0.0020

1. Values in inches are converted from mm and rounded to 4 decimal digits.
2. Back side coating
3. Dimension is measured at the maximum bump diameter parallel to primary datum Z.

Figure 83. WLCSP81- 81-pin, 4.4084 x 3.7594 mm, 0.4 mm pitch wafer level chip scale package recommended footprint

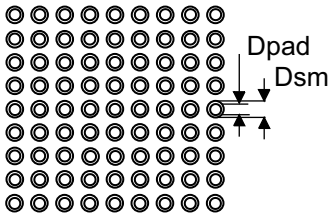

Table 116. WLCSP81 recommended PCB design rules (0.4 mm pitch)

Dimension	Recommended values
Pitch	0.4 mm
Dpad	0.225 mm
Dsm	0.290 mm typ. (depends on the soldermask registration tolerance)
Stencil opening	0.250 mm
Stencil thickness	0.100 mm

Device marking for WLCSP81 package

The following figure gives an example of topside marking orientation versus pin 1 identifier location.

Other optional marking or inset/upset marks, which identify the parts throughout supply chain operations, are not indicated below.

Figure 84. WLCSP81 10 x 10 mm marking example (package top view)

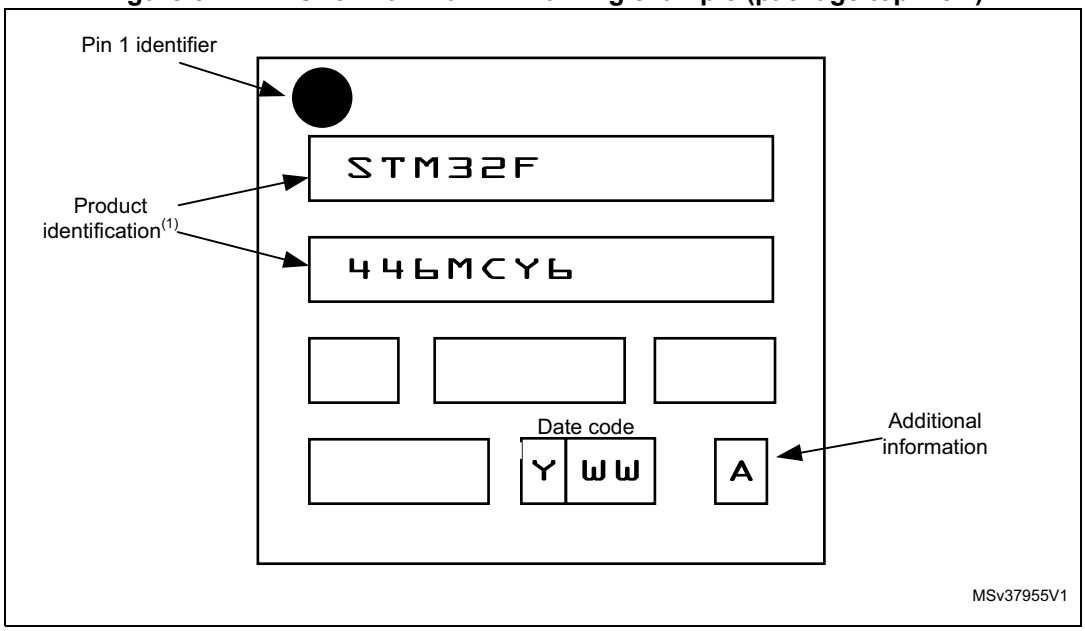

1. Parts marked as “ES”, “E” or accompanied by an Engineering Sample notification letter, are not yet qualified and therefore not yet ready to be used in production and any consequences deriving from such usage will not be at ST charge. In no event ST will be liable for any customer usage of these engineering samples in production. ST Quality has to be contacted prior to any decision to use these Engineering samples to run qualification activity.

7.7 Thermal characteristics

The maximum chip-junction temperature, T_J max, in degrees Celsius, may be calculated using the following equation:

T_J max = T_A max + (P_D max x Θ_{JA})

Where:

- T_A max is the maximum ambient temperature in °C,
- Θ_{JA} is the package junction-to-ambient thermal resistance, in °C/W,
- P_D max is the sum of P_{INT} max and $P_{I/O}$ max (P_D max = P_{INT} max + $P_{I/O}$max),
- P_{INT} max is the product of I_{DD} and V_{DD}, expressed in Watts. This is the maximum chip internal power.

$P_{I/O}$ max represents the maximum power dissipation on output pins where:

$P_{I/O}$ max = Σ (V_{OL} × I_{OL}) + Σ((V_{DD} – V_{OH}) × I_{OH}),

taking into account the actual V_{OL} / I_{OL} and V_{OH} / I_{OH} of the I/Os at low and high level in the application.

Table 117. Package thermal characteristics

Symbol	Parameter	Value	Unit
Θ_{JA}	**Thermal resistance junction-ambient** LQFP64 - 10 × 10 mm	46	°C/W
	Thermal resistance junction-ambient LQFP100 - 14 × 14 mm / 0.5 mm pitch	42	
	Thermal resistance junction-ambient LQFP144 - 20 × 20 mm / 0.5 mm pitch	33	
	Thermal resistance junction-ambient UFBGA144 - 7 × 7 mm / 0.5 mm pitch	51	
	Thermal resistance junction-ambient UFBGA144 - 10 × 10 mm / 0.8 mm pitch	48	
	Thermal resistance junction-ambient WLCSP81	48	

Reference document

JESD51-2 Integrated Circuits Thermal Test Method Environment Conditions - Natural Convection (Still Air). Available from www.jedec.org.

8 Part numbering

Table 118. Ordering information scheme

Example: STM32 F 446 V C T 6 xxx

Device family

STM32 = ARM-based 32-bit microcontroller

Product type

F = general-purpose

Device subfamily

446= STM32F446xC/E,

Pin count

M = 81 pins

R = 64 pins

V = 100 pins

Z = 144 pins

Flash memory size

C=256 Kbytes of Flash memory

E=512 Kbytes of Flash memory

Package

H = UFBGA (7 x 7 mm)

J = UFBGA (10 x 10 mm)

T = LQFP

Y = WLCSP

Temperature range

6 = Industrial temperature range, –40 to 85 °C.

7 = Industrial temperature range, –40 to 105 °C.

Options

xxx = programmed parts

TR = tape and reel

For a list of available options (speed, package, etc.) or for further information on any aspect of this device, please contact your nearest ST sales office.

Appendix A Application block diagrams

A.1 USB OTG full speed (FS) interface solutions

Figure 85. USB controller configured as peripheral-only and used in Full speed mode

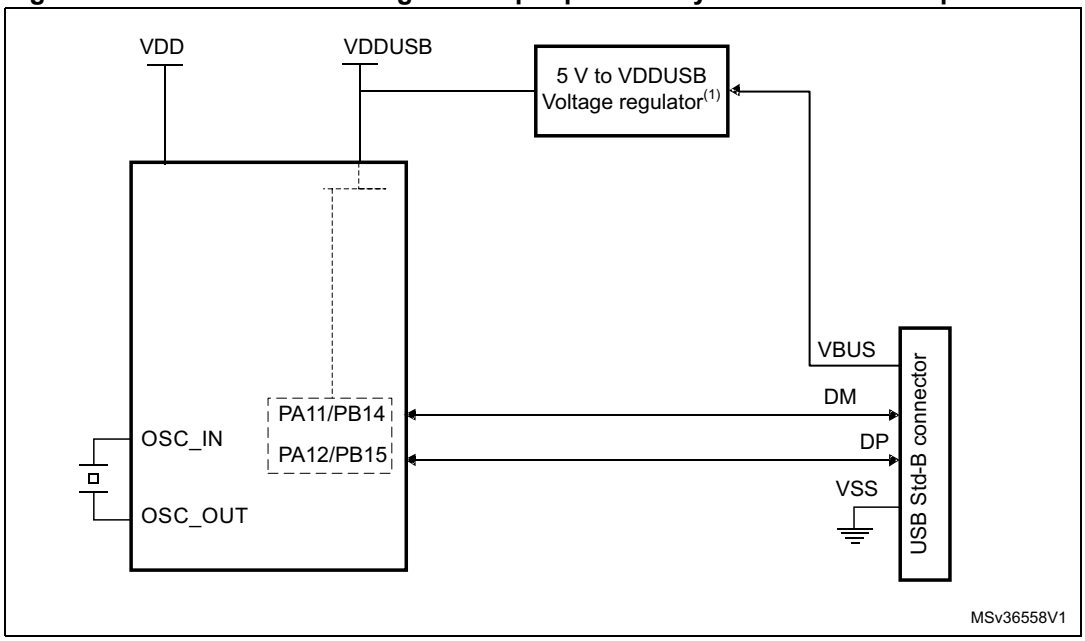

1. External voltage regulator only needed when building a V_{BUS} powered device.
2. The same application can be developed using the OTG HS in FS mode to achieve enhanced performance thanks to the large Rx/Tx FIFO and to a dedicated DMA controller.

Figure 86. USB controller configured as host-only and used in full speed mode

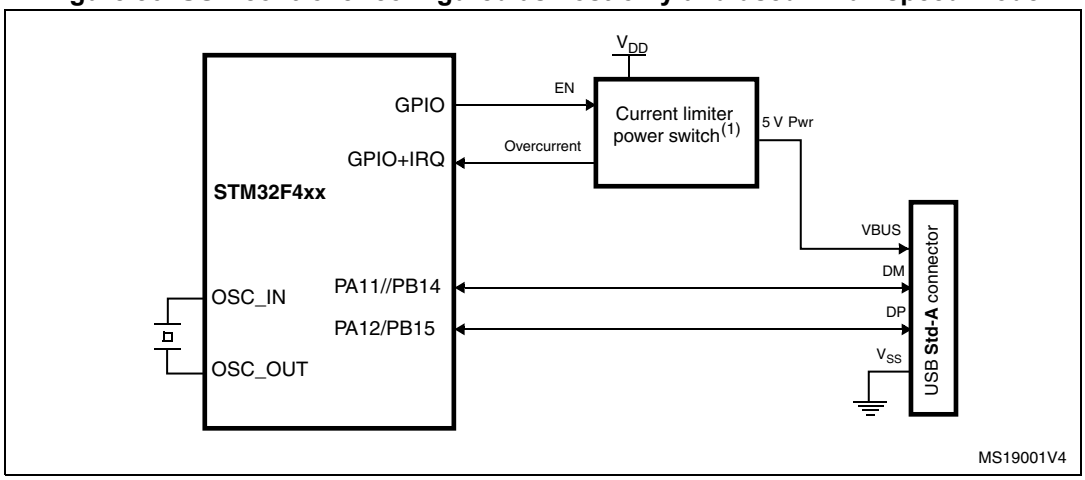

1. The current limiter is required only if the application has to support a V_{BUS} powered device. A basic power switch can be used if 5 V are available on the application board.
2. The same application can be developed using the OTG HS in FS mode to achieve enhanced performance thanks to the large Rx/Tx FIFO and to a dedicated DMA controller.

Figure 87. USB controller configured in dual mode and used in full speed mode

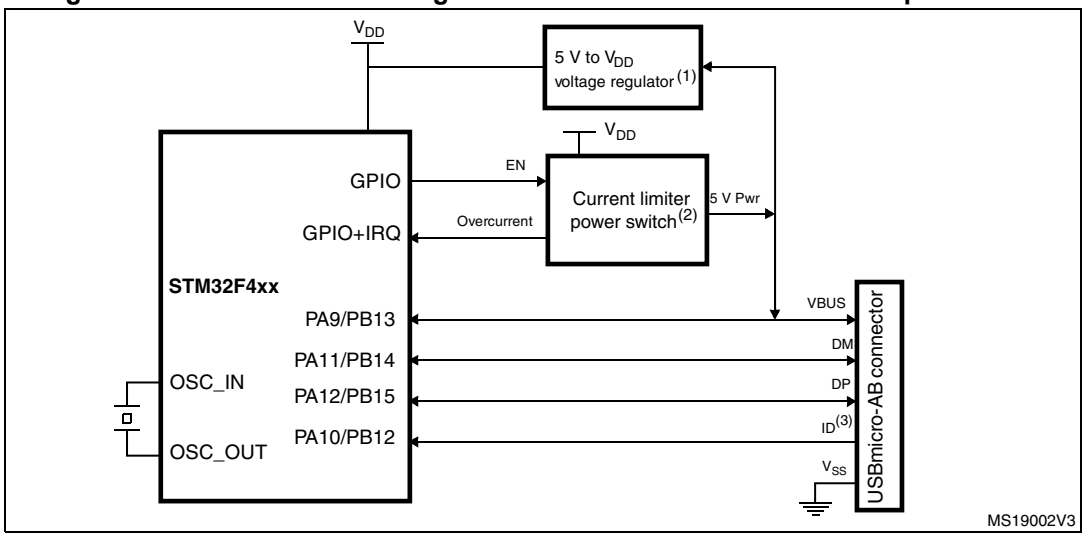

1. External voltage regulator only needed when building a V_{BUS} powered device.
2. The current limiter is required only if the application has to support a V_{BUS} powered device. A basic power switch can be used if 5 V are available on the application board.
3. The ID pin is required in dual role only.
4. The same application can be developed using the OTG HS in FS mode to achieve enhanced performance thanks to the large Rx/Tx FIFO and to a dedicated DMA controller.

A.2 USB OTG high speed (HS) interface solutions

Figure 88. USB controller configured as peripheral, host, or dual-mode and used in high speed mode

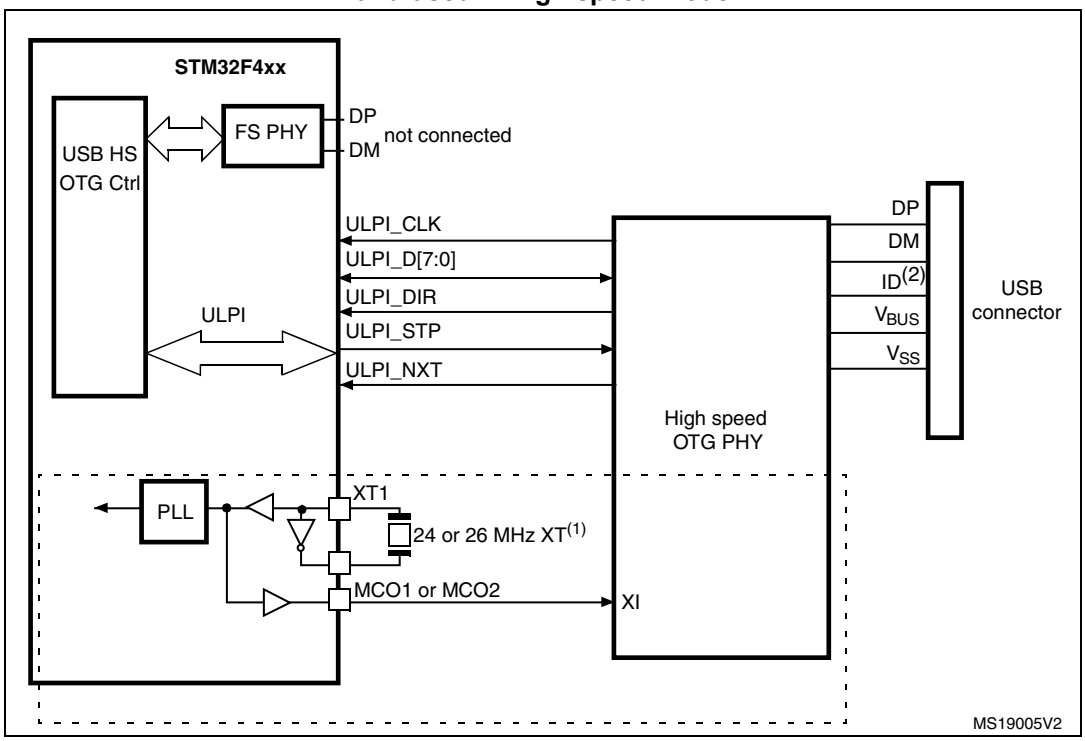

1. It is possible to use MCO1 or MCO2 to save a crystal. It is however not mandatory to clock the STM32F446xx with a 24 or 26 MHz crystal when using USB HS. The above figure only shows an example of a possible connection.
2. The ID pin is required in dual role only.

Revision history

Table 119. Document revision history

Date	Revision	Changes
17-Feb-2015	1	Initial release.
16-Mar-2015	2	Added note 2 inside *Table 2* Updated *Table 11*, *Table 23*, *Table 24*, *Table 25*, *Table 26*, *Table 30*, *Table 51*, *Table 52*, *Table 53*, and *Table 61* Added condition inside *Typical and maximum current consumption* and *Additional current consumption* Added *FMPI2C characteristics* Added *Table 62* and *Figure 35*
29-May-2015	3	Updated: – *Section 6.3.15: Absolute maximum ratings (electrical sensitivity)* – *Section 7: Package information* – *Table 2: STM32F446xC/E features and peripheral counts* – *Table 13: STM32F446xC/xE WLCSP81 ballout* – *Figure 53: ESD absolute maximum ratings* – *Figure 54: Synchronous multiplexed NOR/PSRAM read timings* Added: – *Figure 78: UQFP144 7 x 7 mm marking example (package top view)*, – *Figure 81: UQFP144 10 x 10 mm marking example (package top view)*, – *Figure 84: WLCSP81 10 x 10 mm marking example (package top view)*
10-Aug-2015	4	Updated: – *Figure 14: STM32F446xC/xE UFBGA144 ballout* – *Table 10: STM32F446xx pin and ball descriptions* – *Table 18: VCAP_1/VCAP_2 operating conditions* – *Section 3.15: Power supply schemes* – *Section 6.3.2: VCAP_1/VCAP_2 external capacitor* Added: – *Figure 5: VDDUSB connected to an external independent power supply* – Notes *3* and *4* below *Figure 18: Power supply scheme*

Table 119. Document revision history (continued)

Date	Revision	Changes
03-Nov-2015	5	Updated: – *Introduction*; – *Table 2: STM32F446xC/E features and peripheral counts* – *Table 43: Main PLL characteristics* – Title of *Table 45: PLLISAI characteristics* – *Table 109: LQPF100, 14 x 14 mm 100-pin low-profile quad flat package mechanical data* – *Table 118: Ordering information scheme* – *Figure 10: STM32F446xC/xE LQFP64 pinout* – *Figure 11: STM32F446xC/xE LQFP100 pinout* Added: – *Figure 77: UFBGA144 - 144-ball, 7 x 7 mm, 0.50 mm pitch, ultra fine pitch ball grid array package recommended footprint* – *Figure 111: UFBGA144 - 144-pin, 7 x 7 mm, 0.50 mm pitch, ultra fine pitch ball grid array package mechanical data*
02-Sep-2016	6	Updated: – *Section 7: Package information*; – *Table 30: Typical current consumption in Run mode, code with data processing running from Flash memory or RAM, regulator ON (ART accelerator enabled except prefetch), VDD=1.7 V* – *Table 74: ADC characteristics* – *Table 85: DAC characteristics* Added: – Note *3* in *Figure 33: Recommended NRST pin protection* – Note *4* in *Table 41: HSI oscillator characteristics*

IMPORTANT NOTICE – PLEASE READ CAREFULLY

STMicroelectronics NV and its subsidiaries (“ST”) reserve the right to make changes, corrections, enhancements, modifications, and improvements to ST products and/or to this document at any time without notice. Purchasers should obtain the latest relevant information on ST products before placing orders. ST products are sold pursuant to ST’s terms and conditions of sale in place at the time of order acknowledgement.

Purchasers are solely responsible for the choice, selection, and use of ST products and ST assumes no liability for application assistance or the design of Purchasers’ products.

No license, express or implied, to any intellectual property right is granted by ST herein.

Resale of ST products with provisions different from the information set forth herein shall void any warranty granted by ST for such product.

ST and the ST logo are trademarks of ST. All other product or service names are the property of their respective owners.

Information in this document supersedes and replaces information previously supplied in any prior versions of this document.

© 2016 STMicroelectronics – All rights reserved