PIC16C71X

8-Bit CMOS Microcontrollers with A/D Converter

Devices included in this data sheet:

- PIC16C710
- PIC16C71
- PIC16C711
- PIC16C715

PIC16C71X Microcontroller Core Features:

- High-performance RISC CPU
- Only 35 single word instructions to learn
- All single cycle instructions except for program branches which are two cycle
- Operating speed: DC - 20 MHz clock input
  DC - 200 ns instruction cycle
- Up to 2K x 14 words of Program Memory, up to 128 x 8 bytes of Data Memory (RAM)
- Interrupt capability
- Eight level deep hardware stack
- Direct, indirect, and relative addressing modes
- Power-on Reset (POR)
- Power-up Timer (PWRT) and Oscillator Start-up Timer (OST)
- Watchdog Timer (WDT) with its own on-chip RC oscillator for reliable operation
- Programmable code-protection
- Power saving SLEEP mode
- Selectable oscillator options
- Low-power, high-speed CMOS EPROM technology
- Fully static design
- Wide operating voltage range: 2.5V to 6.0V
- High Sink/Source Current 25/25 mA
- Commercial, Industrial and Extended temperature ranges
- Program Memory Parity Error Checking Circuitry with Parity Error Reset (PER) (PIC16C715)
- Low-power consumption:
  - < 2 mA @ 5V, 4 MHz
  - 15 µA typical @ 3V, 32 kHz
  - < 1 µA typical standby current

PIC16C71X Peripheral Features:

- Timer0: 8-bit timer/counter with 8-bit prescaler
- 8-bit multichannel analog-to-digital converter
- Brown-out detection circuitry for Brown-out Reset (BOR)
- 13 I/O Pins with Individual Direction Control

PIC16C7X Features	710	71	711	715
Program Memory (EPROM) x 14	512	1K	1K	2K
Data Memory (Bytes) x 8	36	36	68	128
I/O Pins	13	13	13	13
Timer Modules	1	1	1	1
A/D Channels	4	4	4	4
In-Circuit Serial Programming	Yes	Yes	Yes	Yes
Brown-out Reset	Yes	—	Yes	Yes
Interrupt Sources	4	4	4	4

Pin Diagrams

PDIP, SOIC, Windowed CERDIP

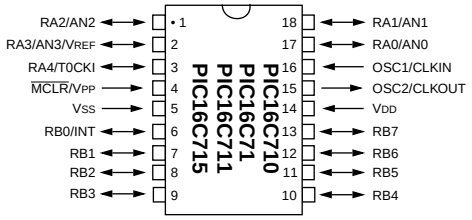

SSOP

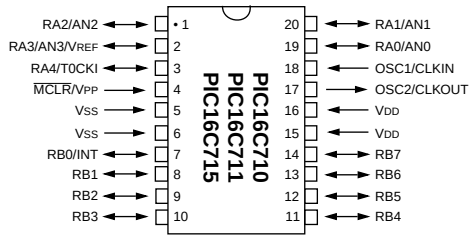

© 1997 Microchip Technology Inc.

Table of Contents

1.0 General Description ... 3
2.0 PIC16C71X Device Varieties ... 5
3.0 Architectural Overview ... 7
4.0 Memory Organization ... 11
5.0 I/O Ports ... 25
6.0 Timer0 Module ... 31
7.0 Analog-to-Digital Converter (A/D) Module ... 37
8.0 Special Features of the CPU ... 47
9.0 Instruction Set Summary ... 69
10.0 Development Support ... 85
11.0 Electrical Characteristics for PIC16C710 and PIC16C711 ... 89
12.0 DC and AC Characteristics Graphs and Tables for PIC16C710 and PIC16C711 ... 101
13.0 Electrical Characteristics for PIC16C715 ... 111
14.0 DC and AC Characteristics Graphs and Tables for PIC16C715 ... 125
15.0 Electrical Characteristics for PIC16C71 ... 135
16.0 DC and AC Characteristics Graphs and Tables for PIC16C71 ... 147
17.0 Packaging Information ... 155
Appendix A: ... 161
Appendix B: Compatibility ... 161
Appendix C: What's New ... 162
Appendix D: What's Changed ... 162
Index ... 163
PIC16C71X Product Identification System ... 173

To Our Valued Customers

We constantly strive to improve the quality of all our products and documentation. We have spent an exceptional amount of time to ensure that these documents are correct. However, we realize that we may have missed a few things. If you find any information that is missing or appears in error, please use the reader response form in the back of this data sheet to inform us. We appreciate your assistance in making this a better document.

© 1997 Microchip Technology Inc.

1.0 GENERAL DESCRIPTION

The PIC16C71X is a family of low-cost, high-performance, CMOS, fully-static, 8-bit microcontrollers with integrated analog-to-digital (A/D) converters, in the PIC16CXX mid-range family.

All PIC16/17 microcontrollers employ an advanced RISC architecture. The PIC16CXX microcontroller family has enhanced core features, eight-level deep stack, and multiple internal and external interrupt sources. The separate instruction and data buses of the Harvard architecture allow a 14-bit wide instruction word with the separate 8-bit wide data. The two stage instruction pipeline allows all instructions to execute in a single cycle, except for program branches which require two cycles. A total of 35 instructions (reduced instruction set) are available. Additionally, a large register set gives some of the architectural innovations used to achieve a very high performance.

PIC16CXX microcontrollers typically achieve a 2:1 code compression and a 4:1 speed improvement over other 8-bit microcontrollers in their class.

The **PIC16C710/71** devices have 36 bytes of RAM, the **PIC16C711** has 68 bytes of RAM and the **PIC16C715** has 128 bytes of RAM. Each device has 13 I/O pins. In addition a timer/counter is available. Also a 4-channel high-speed 8-bit A/D is provided. The 8-bit resolution is ideally suited for applications requiring low-cost analog interface, e.g. thermostat control, pressure sensing, etc.

The PIC16C71X family has special features to reduce external components, thus reducing cost, enhancing system reliability and reducing power consumption. There are four oscillator options, of which the single pin RC oscillator provides a low-cost solution, the LP oscillator minimizes power consumption, XT is a standard crystal, and the HS is for High Speed crystals. The SLEEP (power-down) feature provides a power saving mode. The user can wake up the chip from SLEEP through several external and internal interrupts and resets.

A highly reliable Watchdog Timer with its own on-chip RC oscillator provides protection against software lock-up.

A UV erasable CERDIP packaged version is ideal for code development while the cost-effective One-Time-Programmable (OTP) version is suitable for production in any volume.

The PIC16C71X family fits perfectly in applications ranging from security and remote sensors to appliance control and automotive. The EPROM technology makes customization of application programs (transmitter codes, motor speeds, receiver frequencies, etc.) extremely fast and convenient. The small footprint packages make this microcontroller series perfect for all applications with space limitations. Low cost, low power, high performance, ease of use and I/O flexibility make the PIC16C71X very versatile even in areas where no microcontroller use has been considered before (e.g. timer functions, serial communication, capture and compare, PWM functions and coprocessor applications).

1.1 Family and Upward Compatibility

Users familiar with the PIC16C5X microcontroller family will realize that this is an enhanced version of the PIC16C5X architecture. Please refer to Appendix A for a detailed list of enhancements. Code written for the PIC16C5X can be easily ported to the PIC16CXX family of devices (Appendix B).

1.2 Development Support

PIC16C71X devices are supported by the complete line of Microchip Development tools.

Please refer to Section 10.0 for more details about Microchip's development tools.

© 1997 Microchip Technology Inc.

TABLE 1-1: PIC16C71X FAMILY OF DEVICES

		PIC16C710	PIC16C71	PIC16C711	PIC16C715	PIC16C72	PIC16CR72[1]
Clock	Maximum Frequency of Operation (MHz)	20	20	20	20	20	20
Memory	EPROM Program Memory (x14 words)	512	1K	1K	2K	2K	—
	ROM Program Memory (14K words)	—	—	—	—	—	2K
	Data Memory (bytes)	36	36	68	128	128	128
Peripherals	Timer Module(s)	TMR0	TMR0	TMR0	TMR0	TMR0, TMR1, TMR2	TMR0, TMR1, TMR2
	Capture/Compare/PWM Module(s)	—	—	—	—	1	1
	Serial Port(s) (SPI/I^2C, USART)	—	—	—	—	SPI/I^2C	SPI/I^2C
	Parallel Slave Port	—	—	—	—	—	—
	A/D Converter (8-bit) Channels	4	4	4	4	5	5
Features	Interrupt Sources	4	4	4	4	8	8
	I/O Pins	13	13	13	13	22	22
	Voltage Range (Volts)	2.5-6.0	3.0-6.0	2.5-6.0	2.5-5.5	2.5-6.0	3.0-5.5
	In-Circuit Serial Programming	Yes	Yes	Yes	Yes	Yes	Yes
	Brown-out Reset	Yes	—	Yes	Yes	Yes	Yes
	Packages	18-pin DIP, SOIC; 20-pin SSOP	18-pin DIP, SOIC	18-pin DIP, SOIC; 20-pin SSOP	18-pin DIP, SOIC; 20-pin SSOP	28-pin SDIP, SOIC, SSOP	28-pin SDIP, SOIC, SSOP

		PIC16C73A	PIC16C74A	PIC16C76	PIC16C77
Clock	Maximum Frequency of Operation (MHz)	20	20	20	20
Memory	EPROM Program Memory (x14 words)	4K	4K	8K	8K
	Data Memory (bytes)	192	192	376	376
Peripherals	Timer Module(s)	TMR0, TMR1, TMR2	TMR0, TMR1, TMR2	TMR0, TMR1, TMR2	TMR0, TMR1, TMR2
	Capture/Compare/PWM Module(s)	2	2	2	2
	Serial Port(s) (SPI/I^2C, USART)	SPI/I^2C, USART	SPI/I^2C, USART	SPI/I^2C, USART	SPI/I^2C, USART
	Parallel Slave Port	—	Yes	—	Yes
	A/D Converter (8-bit) Channels	5	8	5	8
Features	Interrupt Sources	11	12	11	12
	I/O Pins	22	33	22	33
	Voltage Range (Volts)	2.5-6.0	2.5-6.0	2.5-6.0	2.5-6.0
	In-Circuit Serial Programming	Yes	Yes	Yes	Yes
	Brown-out Reset	Yes	Yes	Yes	Yes
	Packages	28-pin SDIP, SOIC	40-pin DIP; 44-pin PLCC, MQFP, TQFP	28-pin SDIP, SOIC	40-pin DIP; 44-pin PLCC, MQFP, TQFP

All PIC16/17 Family devices have Power-on Reset, selectable Watchdog Timer, selectable code protect and high I/O current capability. All PIC16C7XX Family devices use serial programming with clock pin RB6 and data pin RB7.

Note 1: Please contact your local Microchip sales office for availability of these devices.

© 1997 Microchip Technology Inc.

2.0 PIC16C71X DEVICE VARIETIES

A variety of frequency ranges and packaging options are available. Depending on application and production requirements, the proper device option can be selected using the information in the PIC16C71X Product Identification System section at the end of this data sheet. When placing orders, please use that page of the data sheet to specify the correct part number.

For the PIC16C71X family, there are two device “types” as indicated in the device number:

1. **C**, as in PIC16**C**71. These devices have EPROM type memory and operate over the standard voltage range.
2. **LC**, as in PIC16**LC**71. These devices have EPROM type memory and operate over an extended voltage range.

2.1 UV Erasable Devices

The UV erasable version, offered in CERDIP package is optimal for prototype development and pilot programs. This version can be erased and reprogrammed to any of the oscillator modes.

Microchip's PICSTART® Plus and PRO MATE® II programmers both support programming of the PIC16C71X.

2.2 One-Time-Programmable (OTP) Devices

The availability of OTP devices is especially useful for customers who need the flexibility for frequent code updates and small volume applications.

The OTP devices, packaged in plastic packages, permit the user to program them once. In addition to the program memory, the configuration bits must also be programmed.

2.3 Quick-Turnaround-Production (QTP) Devices

Microchip offers a QTP Programming Service for factory production orders. This service is made available for users who choose not to program a medium to high quantity of units and whose code patterns have stabilized. The devices are identical to the OTP devices but with all EPROM locations and configuration options already programmed by the factory. Certain code and prototype verification procedures apply before production shipments are available. Please contact your local Microchip Technology sales office for more details.

2.4 Serialized Quick-Turnaround Production (SQTP℠) Devices

Microchip offers a unique programming service where a few user-defined locations in each device are programmed with different serial numbers. The serial numbers may be random, pseudo-random, or sequential.

Serial programming allows each device to have a unique number which can serve as an entry-code, password, or ID number.

© 1997 Microchip Technology Inc.

NOTES:

© 1997 Microchip Technology Inc.

3.0 ARCHITECTURAL OVERVIEW

The high performance of the PIC16CXX family can be attributed to a number of architectural features commonly found in RISC microprocessors. To begin with, the PIC16CXX uses a Harvard architecture, in which, program and data are accessed from separate memories using separate buses. This improves bandwidth over traditional von Neumann architecture in which program and data are fetched from the same memory using the same bus. Separating program and data buses further allows instructions to be sized differently than the 8-bit wide data word. Instruction opcodes are 14-bits wide making it possible to have all single word instructions. A 14-bit wide program memory access bus fetches a 14-bit instruction in a single cycle. A two-stage pipeline overlaps fetch and execution of instructions (Example 3-1). Consequently, all instructions (35) execute in a single cycle (200 ns @ 20 MHz) except for program branches.

The table below lists program memory (EPROM) and data memory (RAM) for each PIC16C71X device.

Device	Program Memory	Data Memory
PIC16C710	512 x 14	36 x 8
PIC16C71	1K x 14	36 x 8
PIC16C711	1K x 14	68 x 8
PIC16C715	2K x 14	128 x 8

The PIC16CXX can directly or indirectly address its register files or data memory. All special function registers, including the program counter, are mapped in the data memory. The PIC16CXX has an orthogonal (symmetrical) instruction set that makes it possible to carry out any operation on any register using any addressing mode. This symmetrical nature and lack of ‘special optimal situations’ make programming with the PIC16CXX simple yet efficient. In addition, the learning curve is reduced significantly.

PIC16CXX devices contain an 8-bit ALU and working register. The ALU is a general purpose arithmetic unit. It performs arithmetic and Boolean functions between the data in the working register and any register file.

The ALU is 8-bits wide and capable of addition, subtraction, shift and logical operations. Unless otherwise mentioned, arithmetic operations are two's complement in nature. In two-operand instructions, typically one operand is the working register (W register). The other operand is a file register or an immediate constant. In single operand instructions, the operand is either the W register or a file register.

The W register is an 8-bit working register used for ALU operations. It is not an addressable register.

Depending on the instruction executed, the ALU may affect the values of the Carry (C), Digit Carry (DC), and Zero (Z) bits in the STATUS register. The C and DC bits operate as a $\overline{\text{borrow}}$ bit and a $\overline{\text{digit borrow}}$ out bit, respectively, in subtraction. See the `SUBLW` and `SUBWF` instructions for examples.

FIGURE 3-1: PIC16C71X BLOCK DIAGRAM

Device	Program Memory	Data Memory (RAM)
PIC16C710	512 x 14	36 x 8
PIC16C71	1K x 14	36 x 8
PIC16C711	1K x 14	68 x 8
PIC16C715	2K x 14	128 x 8

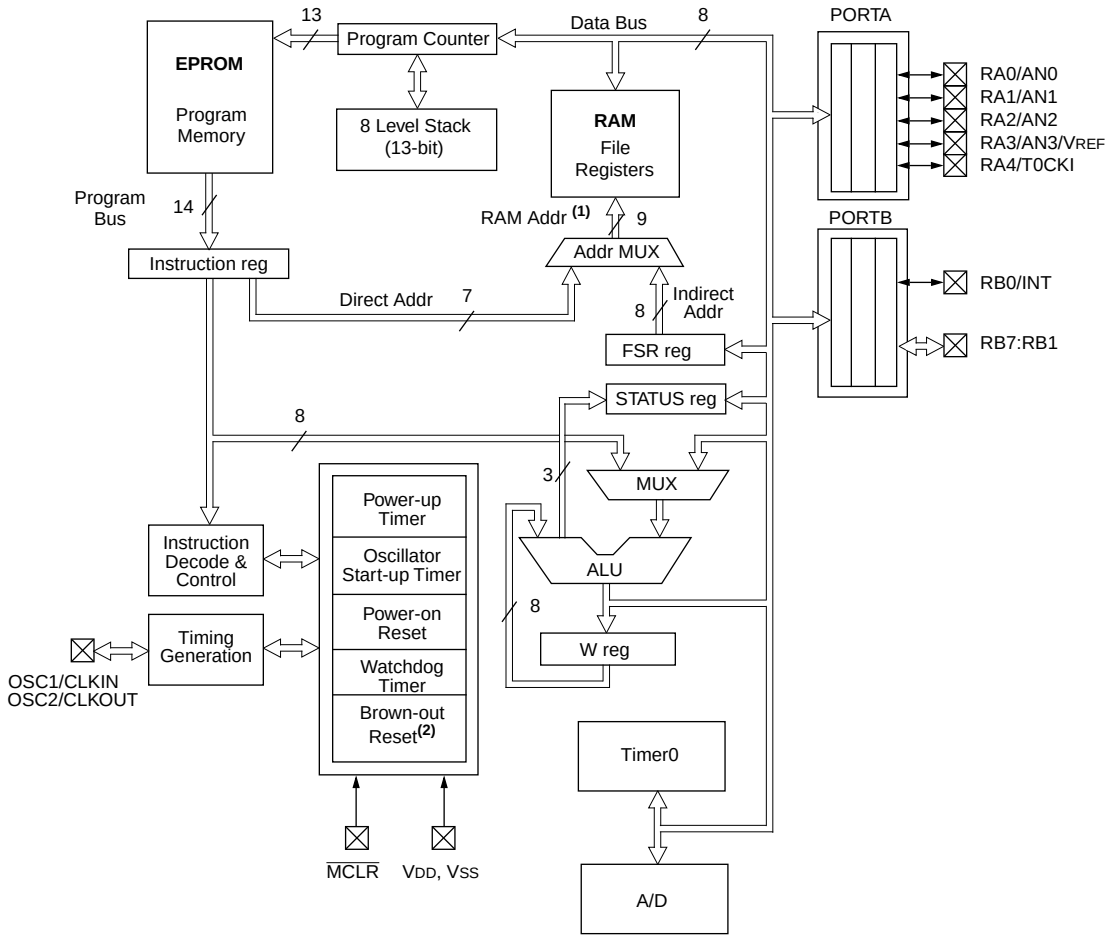

Note 1: Higher order bits are from the STATUS register.
2: Brown-out Reset is not available on the PIC16C71.

© 1997 Microchip Technology Inc.

TABLE 3-1: PIC16C710/71/711/715 PINOUT DESCRIPTION

Pin Name	DIP Pin#	SSOP Pin#(4)	SOIC Pin#	I/O/P Type	Buffer Type	Description
OSC1/CLKIN	16	18	16	I	ST/CMOS(3)	Oscillator crystal input/external clock source input.
OSC2/CLKOUT	15	17	15	O	—	Oscillator crystal output. Connects to crystal or resonator in crystal oscillator mode. In RC mode, OSC2 pin outputs CLKOUT which has 1/4 the frequency of OSC1, and denotes the instruction cycle rate.
$\overline{\text{MCLR}}$/VPP	4	4	4	I/P	ST	Master clear (reset) input or programming voltage input. This pin is an active low reset to the device.
						PORTA is a bi-directional I/O port.
RA0/AN0	17	19	17	I/O	TTL	RA0 can also be analog input0
RA1/AN1	18	20	18	I/O	TTL	RA1 can also be analog input1
RA2/AN2	1	1	1	I/O	TTL	RA2 can also be analog input2
RA3/AN3/VREF	2	2	2	I/O	TTL	RA3 can also be analog input3 or analog reference voltage
RA4/T0CKI	3	3	3	I/O	ST	RA4 can also be the clock input to the Timer0 module. Output is open drain type.
						PORTB is a bi-directional I/O port. PORTB can be software programmed for internal weak pull-up on all inputs.
RB0/INT	6	7	6	I/O	TTL/ST(1)	RB0 can also be the external interrupt pin.
RB1	7	8	7	I/O	TTL	
RB2	8	9	8	I/O	TTL	
RB3	9	10	9	I/O	TTL	
RB4	10	11	10	I/O	TTL	Interrupt on change pin.
RB5	11	12	11	I/O	TTL	Interrupt on change pin.
RB6	12	13	12	I/O	TTL/ST(2)	Interrupt on change pin. Serial programming clock.
RB7	13	14	13	I/O	TTL/ST(2)	Interrupt on change pin. Serial programming data.
VSS	5	4, 6	5	P	—	Ground reference for logic and I/O pins.
VDD	14	15, 16	14	P	—	Positive supply for logic and I/O pins.

Legend: I = input O = output I/O = input/output P = power
— = Not used TTL = TTL input ST = Schmitt Trigger input

Note 1: This buffer is a Schmitt Trigger input when configured as the external interrupt.
2: This buffer is a Schmitt Trigger input when used in serial programming mode.
3: This buffer is a Schmitt Trigger input when configured in RC oscillator mode and a CMOS input otherwise.
4: The PIC16C71 is not available in SSOP package.

3.1 Clocking Scheme/Instruction Cycle

The clock input (from OSC1) is internally divided by four to generate four non-overlapping quadrature clocks namely Q1, Q2, Q3 and Q4. Internally, the program counter (PC) is incremented every Q1, the instruction is fetched from the program memory and latched into the instruction register in Q4. The instruction is decoded and executed during the following Q1 through Q4. The clocks and instruction execution flow is shown in Figure 3-2.

3.2 Instruction Flow/Pipelining

An “Instruction Cycle” consists of four Q cycles (Q1, Q2, Q3 and Q4). The instruction fetch and execute are pipelined such that fetch takes one instruction cycle while decode and execute takes another instruction cycle. However, due to the pipelining, each instruction effectively executes in one cycle. If an instruction causes the program counter to change (e.g. `GOTO`) then two cycles are required to complete the instruction (Example 3-1).

A fetch cycle begins with the program counter (PC) incrementing in Q1.

In the execution cycle, the fetched instruction is latched into the “Instruction Register” (IR) in cycle Q1. This instruction is then decoded and executed during the Q2, Q3, and Q4 cycles. Data memory is read during Q2 (operand read) and written during Q4 (destination write).

FIGURE 3-2: CLOCK/INSTRUCTION CYCLE

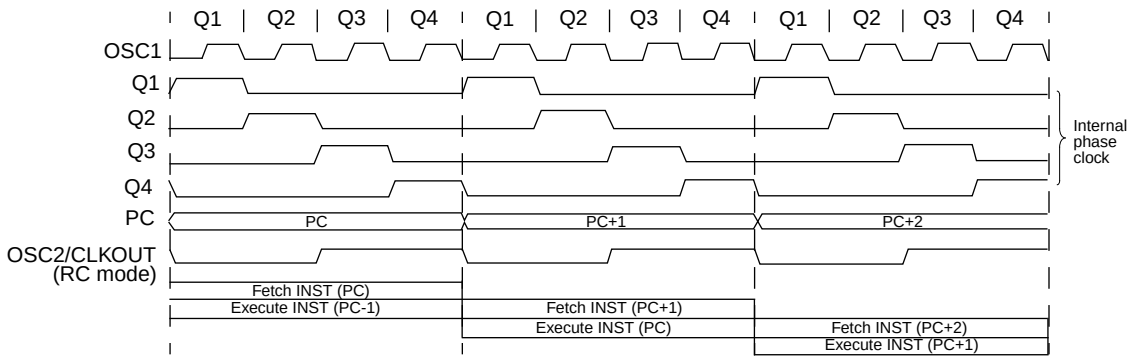

EXAMPLE 3-1: INSTRUCTION PIPELINE FLOW

	Tcy0	Tcy1	Tcy2	Tcy3	Tcy4	Tcy5
1. `MOVLW 55h`	Fetch 1	Execute 1				
2. `MOVWF PORTB`		Fetch 2	Execute 2			
3. `CALL SUB_1`			Fetch 3	Execute 3		
4. `BSF PORTA, BIT3 (Forced NOP)`				Fetch 4	Flush	
5. `Instruction @ address SUB_1`					Fetch SUB_1	Execute SUB_1

All instructions are single cycle, except for any program branches. These take two cycles since the fetch instruction is “flushed” from the pipeline while the new instruction is being fetched and then executed.

© 1997 Microchip Technology Inc.

4.0 MEMORY ORGANIZATION

4.1 Program Memory Organization

The PIC16C71X family has a 13-bit program counter capable of addressing an 8K x 14 program memory space. The amount of program memory available to each device is listed below:

Device	Program Memory	Address Range
PIC16C710	512 x 14	0000h-01FFh
PIC16C71	1K x 14	0000h-03FFh
PIC16C711	1K x 14	0000h-03FFh
PIC16C715	2K x 14	0000h-07FFh

For those devices with less than 8K program memory, accessing a location above the physically implemented address will cause a wraparound.

The reset vector is at 0000h and the interrupt vector is at 0004h.

FIGURE 4-1: PIC16C710 PROGRAM MEMORY MAP AND STACK

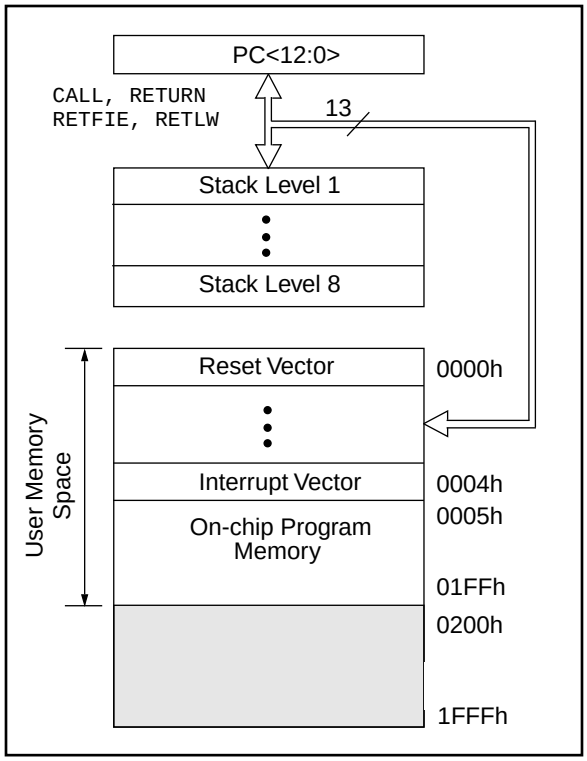

FIGURE 4-2: PIC16C71/711 PROGRAM MEMORY MAP AND STACK

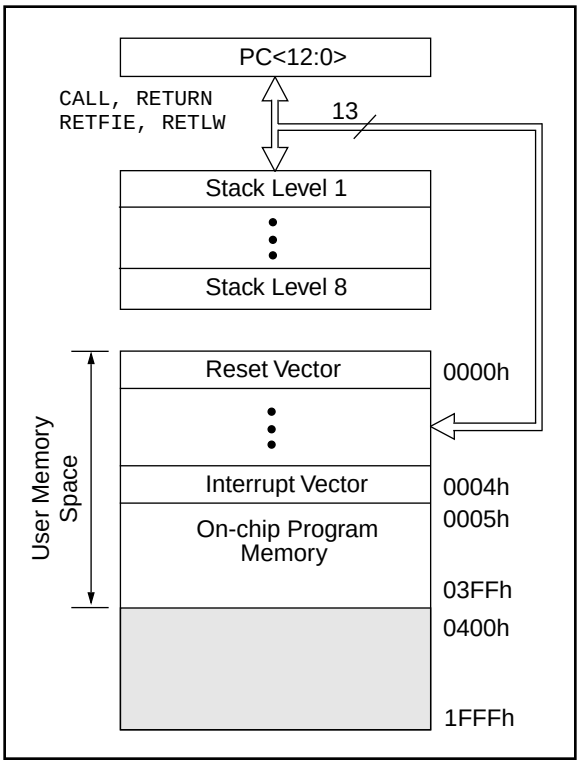

FIGURE 4-3: PIC16C715 PROGRAM MEMORY MAP AND STACK

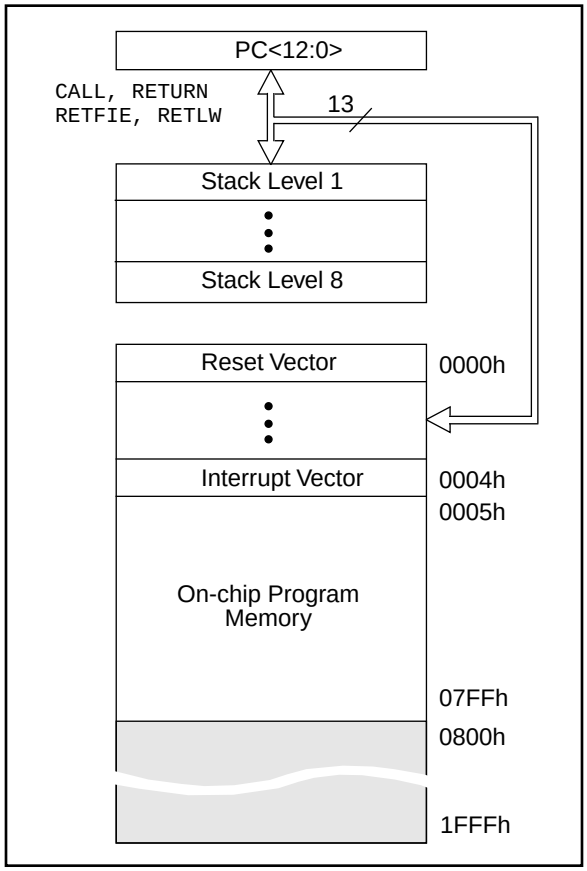

© 1997 Microchip Technology Inc.

4.2 Data Memory Organization

The data memory is partitioned into two Banks which contain the General Purpose Registers and the Special Function Registers. Bit RP0 is the bank select bit.

RP0 (STATUS<5>) = 1 → Bank 1

RP0 (STATUS<5>) = 0 → Bank 0

Each Bank extends up to 7Fh (128 bytes). The lower locations of each Bank are reserved for the Special Function Registers. Above the Special Function Registers are General Purpose Registers implemented as static RAM. Both Bank 0 and Bank 1 contain special function registers. Some "high use" special function registers from Bank 0 are mirrored in Bank 1 for code reduction and quicker access.

4.2.1 GENERAL PURPOSE REGISTER FILE

The register file can be accessed either directly, or indirectly through the File Select Register FSR (Section 4.5).

FIGURE 4-4: PIC16C710/71 REGISTER FILE MAP

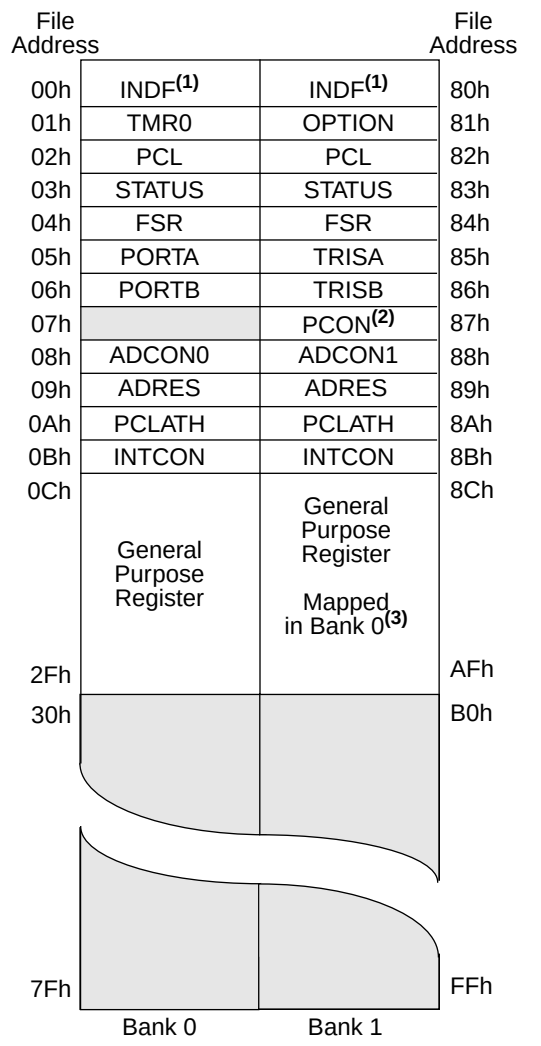

Unimplemented data memory locations, read as '0'.

Note 1: Not a physical register.

2: The PCON register is not implemented on the PIC16C71.

3: These locations are unimplemented in Bank 1. Any access to these locations will access the corresponding Bank 0 register.

© 1997 Microchip Technology Inc.

FIGURE 4-5: PIC16C711 REGISTER FILE MAP

File Address	Bank 0	Bank 1	File Address
00h	INDF(1)	INDF(1)	80h
01h	TMR0	OPTION	81h
02h	PCL	PCL	82h
03h	STATUS	STATUS	83h
04h	FSR	FSR	84h
05h	PORTA	TRISA	85h
06h	PORTB	TRISB	86h
07h		PCON	87h
08h	ADCON0	ADCON1	88h
09h	ADRES	ADRES	89h
0Ah	PCLATH	PCLATH	8Ah
0Bh	INTCON	INTCON	8Bh
0Ch	General Purpose Register	General Purpose Register Mapped in Bank 0(2)	8Ch
4Fh			CFh
50h			D0h
7Fh			FFh

Unimplemented data memory locations, read as '0'.

Note 1: Not a physical register.

2: These locations are unimplemented in Bank 1. Any access to these locations will access the corresponding Bank 0 register.

FIGURE 4-6: PIC16C715 REGISTER FILE MAP

File Address	Bank 0	Bank 1	File Address
00h	INDF(1)	INDF(1)	80h
01h	TMR0	OPTION	81h
02h	PCL	PCL	82h
03h	STATUS	STATUS	83h
04h	FSR	FSR	84h
05h	PORTA	TRISA	85h
06h	PORTB	TRISB	86h
07h			87h
08h			88h
09h			89h
0Ah	PCLATH	PCLATH	8Ah
0Bh	INTCON	INTCON	8Bh
0Ch	PIR1	PIE1	8Ch
0Dh			8Dh
0Eh		PCON	8Eh
0Fh			8Fh
10h			90h
11h			91h
12h			92h
13h			93h
14h			94h
15h			95h
16h			96h
17h			97h
18h			98h
19h			99h
1Ah			9Ah
1Bh			9Bh
1Ch			9Ch
1Dh			9Dh
1Eh	ADRES		9Eh
1Fh	ADCON0	ADCON1	9Fh
20h	General Purpose Register	General Purpose Register	A0h
			BFh
			C0h
7Fh			FFh

Unimplemented data memory locations, read as '0'.

Note 1: Not a physical register.

4.2.2 SPECIAL FUNCTION REGISTERS

The Special Function Registers are registers used by the CPU and Peripheral Modules for controlling the desired operation of the device. These registers are implemented as static RAM.

The special function registers can be classified into two sets (core and peripheral). Those registers associated with the “core” functions are described in this section, and those related to the operation of the peripheral features are described in the section of that peripheral feature.

TABLE 4-1: PIC16C710/71/711 SPECIAL FUNCTION REGISTER SUMMARY

Address	Name	Bit 7	Bit 6	Bit 5	Bit 4	Bit 3	Bit 2	Bit 1	Bit 0	Value on: POR, BOR	Value on all other resets (1)
Bank 0											
00h(3)	INDF	Addressing this location uses contents of FSR to address data memory (not a physical register)								0000 0000	0000 0000
01h	TMR0	Timer0 module's register								xxxx xxxx	uuuu uuuu
02h(3)	PCL	Program Counter's (PC) Least Significant Byte								0000 0000	0000 0000
03h(3)	STATUS	IRP(5)	RP1(5)	RP0	$\overline{TO}$	$\overline{PD}$	Z	DC	C	0001 1xxx	000q quuu
04h(3)	FSR	Indirect data memory address pointer								xxxx xxxx	uuuu uuuu
05h	PORTA	—	—	—	PORTA Data Latch when written: PORTA pins when read					---x 0000	---u 0000
06h	PORTB	PORTB Data Latch when written: PORTB pins when read								xxxx xxxx	uuuu uuuu
07h	—	Unimplemented								—	—
08h	ADCON0	ADCS1	ADCS0	**(6)**	CHS1	CHS0	GO/$\overline{DONE}$	ADIF	ADON	00-0 0000	00-0 0000
09h(3)	ADRES	A/D Result Register								xxxx xxxx	uuuu uuuu
0Ah(2,3)	PCLATH	—	—	—	Write Buffer for the upper 5 bits of the Program Counter					---0 0000	---0 0000
0Bh(3)	INTCON	GIE	ADIE	T0IE	INTE	RBIE	T0IF	INTF	RBIF	0000 000x	0000 000u
Bank 1											
80h(3)	INDF	Addressing this location uses contents of FSR to address data memory (not a physical register)								0000 0000	0000 0000
81h	OPTION	$\overline{RBPU}$	INTEDG	T0CS	T0SE	PSA	PS2	PS1	PS0	1111 1111	1111 1111
82h(3)	PCL	Program Counter's (PC) Least Significant Byte								0000 0000	0000 0000
83h(3)	STATUS	IRP(5)	RP1(5)	RP0	$\overline{TO}$	$\overline{PD}$	Z	DC	C	0001 1xxx	000q quuu
84h(3)	FSR	Indirect data memory address pointer								xxxx xxxx	uuuu uuuu
85h	TRISA	—	—	—	PORTA Data Direction Register					---1 1111	---1 1111
86h	TRISB	PORTB Data Direction Control Register								1111 1111	1111 1111
87h(4)	PCON	—	—	—	—	—	—	$\overline{POR}$	$\overline{BOR}$	---- --qq	---- --uu
88h	ADCON1	—	—	—	—	—	—	PCFG1	PCFG0	---- --00	---- --00
89h(3)	ADRES	A/D Result Register								xxxx xxxx	uuuu uuuu
8Ah(2,3)	PCLATH	—	—	—	Write Buffer for the upper 5 bits of the Program Counter					---0 0000	---0 0000
8Bh(3)	INTCON	GIE	ADIE	T0IE	INTE	RBIE	T0IF	INTF	RBIF	0000 000x	0000 000u

Legend: x = unknown, u = unchanged, q = value depends on condition, - = unimplemented read as '0'.
Shaded locations are unimplemented, read as ‘0’.

Note 1: Other (non power-up) resets include external reset through $\overline{MCLR}$ and Watchdog Timer Reset.
2: The upper byte of the program counter is not directly accessible. PCLATH is a holding register for the PC<12:8> whose contents are transferred to the upper byte of the program counter.
3: These registers can be addressed from either bank.
4: The PCON register is not physically implemented in the PIC16C71, read as ’0’.
5: The IRP and RP1 bits are reserved on the PIC16C710/71/711, always maintain these bits clear.
6: Bit5 of ADCON0 is a General Purpose R/W bit for the PIC16C710/711 only. For the PIC16C71, this bit is unimplemented, read as '0'.

© 1997 Microchip Technology Inc.

TABLE 4-2: PIC16C715 SPECIAL FUNCTION REGISTER SUMMARY

Address	Name	Bit 7	Bit 6	Bit 5	Bit 4	Bit 3	Bit 2	Bit 1	Bit 0	Value on: POR, BOR, PER	Value on all other resets (3)
Bank 0											
00h(1)	INDF	Addressing this location uses contents of FSR to address data memory (not a physical register)								0000 0000	0000 0000
01h	TMR0	Timer0 module's register								xxxx xxxx	uuuu uuuu
02h(1)	PCL	Program Counter's (PC) Least Significant Byte								0000 0000	0000 0000
03h(1)	STATUS	IRP(4)	RP1(4)	RP0	$\overline{TO}$	$\overline{PD}$	Z	DC	C	0001 1xxx	000q quuu
04h(1)	FSR	Indirect data memory address pointer								xxxx xxxx	uuuu uuuu
05h	PORTA	—	—	—	PORTA Data Latch when written: PORTA pins when read					---x 0000	---u 0000
06h	PORTB	PORTB Data Latch when written: PORTB pins when read								xxxx xxxx	uuuu uuuu
07h	—	Unimplemented								—	—
08h	—	Unimplemented								—	—
09h	—	Unimplemented								—	—
0Ah(1,2)	PCLATH	—	—	—	Write Buffer for the upper 5 bits of the Program Counter					---0 0000	---0 0000
0Bh(1)	INTCON	GIE	PEIE	T0IE	INTE	RBIE	T0IF	INTF	RBIF	0000 000x	0000 000u
0Ch	PIR1	—	ADIF	—	—	—	—	—	—	-0-- ----	-0-- ----
0Dh	—	Unimplemented								—	—
0Eh	—	Unimplemented								—	—
0Fh	—	Unimplemented								—	—
10h	—	Unimplemented								—	—
11h	—	Unimplemented								—	—
12h	—	Unimplemented								—	—
13h	—	Unimplemented								—	—
14h	—	Unimplemented								—	—
15h	—	Unimplemented								—	—
16h	—	Unimplemented								—	—
17h	—	Unimplemented								—	—
18h	—	Unimplemented								—	—
19h	—	Unimplemented								—	—
1Ah	—	Unimplemented								—	—
1Bh	—	Unimplemented								—	—
1Ch	—	Unimplemented								—	—
1Dh	—	Unimplemented								—	—
1Eh	ADRES	A/D Result Register								xxxx xxxx	uuuu uuuu
1Fh	ADCON0	ADCS1	ADCS0	CHS2	CHS1	CHS0	GO/$\overline{DONE}$	—	ADON	0000 00-0	0000 00-0

Legend: x = unknown, u = unchanged, q = value depends on condition, - = unimplemented read as '0'.
Shaded locations are unimplemented, read as '0'.

Note 1: These registers can be addressed from either bank.
2: The upper byte of the program counter is not directly accessible. PCLATH is a holding register for the PC<12:8> whose contents are transferred to the upper byte of the program counter.
3: Other (non power-up) resets include external reset through $\overline{MCLR}$ and Watchdog Timer Reset.
4: The IRP and RP1 bits are reserved on the PIC16C715, always maintain these bits clear.

TABLE 4-2: PIC16C715 SPECIAL FUNCTION REGISTER SUMMARY (Cont.'d)

Address	Name	Bit 7	Bit 6	Bit 5	Bit 4	Bit 3	Bit 2	Bit 1	Bit 0	Value on: POR, BOR, PER	Value on all other resets (3)
Bank 1											
80h(1)	INDF	Addressing this location uses contents of FSR to address data memory (not a physical register)								0000 0000	0000 0000
81h	OPTION	$\overline{\text{RBPU}}$	INTEDG	T0CS	T0SE	PSA	PS2	PS1	PS0	1111 1111	1111 1111
82h(1)	PCL	Program Counter's (PC) Least Significant Byte								0000 0000	0000 0000
83h(1)	STATUS	IRP(4)	RP1(4)	RP0	$\overline{\text{TO}}$	$\overline{\text{PD}}$	Z	DC	C	0001 1xxx	000q quuu
84h(1)	FSR	Indirect data memory address pointer								xxxx xxxx	uuuu uuuu
85h	TRISA	—	—	PORTA Data Direction Register						--11 1111	--11 1111
86h	TRISB	PORTB Data Direction Register								1111 1111	1111 1111
87h	—	Unimplemented								—	—
88h	—	Unimplemented								—	—
89h	—	Unimplemented								—	—
8Ah(1,2)	PCLATH	—	—	—	Write Buffer for the upper 5 bits of the PC					---0 0000	---0 0000
8Bh(1)	INTCON	GIE	PEIE	T0IE	INTE	RBIE	T0IF	INTF	RBIF	0000 000x	0000 000u
8Ch	PIE1	—	ADIE	—	—	—	—	—	—	-0-- ----	-0-- ----
8Dh	—	Unimplemented								—	—
8Eh	PCON	MPEEN	—	—	—	—	$\overline{\text{PER}}$	$\overline{\text{POR}}$	$\overline{\text{BOR}}$	u--- -1qq	u--- -1uu
8Fh	—	Unimplemented								—	—
90h	—	Unimplemented								—	—
91h	—	Unimplemented								—	—
92h	—	Unimplemented								—	—
93h	—	Unimplemented								—	—
94h	—	Unimplemented								—	—
95h	—	Unimplemented								—	—
96h	—	Unimplemented								—	—
97h	—	Unimplemented								—	—
98h	—	Unimplemented								—	—
99h	—	Unimplemented								—	—
9Ah	—	Unimplemented								—	—
9Bh	—	Unimplemented								—	—
9Ch	—	Unimplemented								—	—
9Dh	—	Unimplemented								—	—
9Eh	—	Unimplemented								—	—
9Fh	ADCON1	—	—	—	—	—	—	PCFG1	PCFG0	---- --00	---- --00

Legend: x = unknown, u = unchanged, q = value depends on condition, - = unimplemented read as '0'.
Shaded locations are unimplemented, read as '0'.

Note 1: These registers can be addressed from either bank.
2: The upper byte of the program counter is not directly accessible. PCLATH is a holding register for the PC<12:8> whose contents are transferred to the upper byte of the program counter.
3: Other (non power-up) resets include external reset through $\overline{\text{MCLR}}$ and Watchdog Timer Reset.
4: The IRP and RP1 bits are reserved on the PIC16C715, always maintain these bits clear.

© 1997 Microchip Technology Inc.

4.2.2.1 STATUS REGISTER

Applicable Devices	710	71	711	715

The STATUS register, shown in Figure 4-7, contains the arithmetic status of the ALU, the RESET status and the bank select bits for data memory.

The STATUS register can be the destination for any instruction, as with any other register. If the STATUS register is the destination for an instruction that affects the Z, DC or C bits, then the write to these three bits is disabled. These bits are set or cleared according to the device logic. Furthermore, the $\overline{TO}$ and $\overline{PD}$ bits are not writable. Therefore, the result of an instruction with the STATUS register as destination may be different than intended.

For example, `CLRF STATUS` will clear the upper-three bits and set the Z bit. This leaves the STATUS register as `000u u1uu` (where u = unchanged).

It is recommended, therefore, that only `BCF`, `BSF`, `SWAPF` and `MOVWF` instructions are used to alter the STATUS register because these instructions do not affect the Z, C or DC bits from the STATUS register. For other instructions, not affecting any status bits, see the "Instruction Set Summary."

Note 1: For those devices that do not use bits IRP and RP1 (STATUS<7:6>), maintain these bits clear to ensure upward compatibility with future products.

Note 2: The C and DC bits operate as a $\overline{borrow}$ and $\overline{digit\ borrow}$ bit, respectively, in subtraction. See the `SUBLW` and `SUBWF` instructions for examples.

FIGURE 4-7: STATUS REGISTER (ADDRESS 03h, 83h)

R/W-0	R/W-0	R/W-0	R-1	R-1	R/W-x	R/W-x	R/W-x
IRP	RP1	RP0	$\overline{TO}$	$\overline{PD}$	Z	DC	C
bit7							bit0

R = Readable bit
W = Writable bit
U = Unimplemented bit, read as '0'
- n = Value at POR reset

bit 7: **IRP:** Register Bank Select bit (used for indirect addressing)
1 = Bank 2, 3 (100h - 1FFh)
0 = Bank 0, 1 (00h - FFh)

bit 6-5: **RP1:RP0:** Register Bank Select bits (used for direct addressing)
`11` = Bank 3 (180h - 1FFh)
`10` = Bank 2 (100h - 17Fh)
`01` = Bank 1 (80h - FFh)
`00` = Bank 0 (00h - 7Fh)
Each bank is 128 bytes

bit 4: **$\overline{TO}$:** Time-out bit
1 = After power-up, `CLRWDT` instruction, or `SLEEP` instruction
0 = A WDT time-out occurred

bit 3: **$\overline{PD}$:** Power-down bit
1 = After power-up or by the `CLRWDT` instruction
0 = By execution of the `SLEEP` instruction

bit 2: **Z:** Zero bit
1 = The result of an arithmetic or logic operation is zero
0 = The result of an arithmetic or logic operation is not zero

bit 1: **DC:** Digit carry/$\overline{borrow}$ bit (`ADDWF`, `ADDLW`, `SUBLW`, `SUBWF` instructions)(for $\overline{borrow}$ the polarity is reversed)
1 = A carry-out from the 4th low order bit of the result occurred
0 = No carry-out from the 4th low order bit of the result

bit 0: **C:** Carry/$\overline{borrow}$ bit (`ADDWF`, `ADDLW`, `SUBLW`, `SUBWF` instructions)
1 = A carry-out from the most significant bit of the result occurred
0 = No carry-out from the most significant bit of the result occurred
Note: For $\overline{borrow}$ the polarity is reversed. A subtraction is executed by adding the two's complement of the second operand. For rotate (`RRF`, `RLF`) instructions, this bit is loaded with either the high or low order bit of the source register.

4.2.2.2 OPTION REGISTER

Applicable Devices	710	71	711	715

The OPTION register is a readable and writable register which contains various control bits to configure the TMR0/WDT prescaler, the External INT Interrupt, TMR0, and the weak pull-ups on PORTB.

> **Note:** To achieve a 1:1 prescaler assignment for the TMR0 register, assign the prescaler to the Watchdog Timer by setting bit PSA (OPTION<3>).

FIGURE 4-8: OPTION REGISTER (ADDRESS 81h, 181h)

R/W-1	R/W-1	R/W-1	R/W-1	R/W-1	R/W-1	R/W-1	R/W-1
$\overline{\text{RBPU}}$	INTEDG	T0CS	T0SE	PSA	PS2	PS1	PS0
bit7							bit0

R = Readable bit
W = Writable bit
U = Unimplemented bit, read as ‘0’
- n = Value at POR reset

bit 7: **$\overline{\text{RBPU}}$:** PORTB Pull-up Enable bit
1 = PORTB pull-ups are disabled
0 = PORTB pull-ups are enabled by individual port latch values

bit 6: **INTEDG:** Interrupt Edge Select bit
1 = Interrupt on rising edge of RB0/INT pin
0 = Interrupt on falling edge of RB0/INT pin

bit 5: **T0CS:** TMR0 Clock Source Select bit
1 = Transition on RA4/T0CKI pin
0 = Internal instruction cycle clock (CLKOUT)

bit 4: **T0SE:** TMR0 Source Edge Select bit
1 = Increment on high-to-low transition on RA4/T0CKI pin
0 = Increment on low-to-high transition on RA4/T0CKI pin

bit 3: **PSA:** Prescaler Assignment bit
1 = Prescaler is assigned to the WDT
0 = Prescaler is assigned to the Timer0 module

bit 2-0: **PS2:PS0:** Prescaler Rate Select bits

Bit Value	TMR0 Rate	WDT Rate
000	1 : 2	1 : 1
001	1 : 4	1 : 2
010	1 : 8	1 : 4
011	1 : 16	1 : 8
100	1 : 32	1 : 16
101	1 : 64	1 : 32
110	1 : 128	1 : 64
111	1 : 256	1 : 128

© 1997 Microchip Technology Inc.

4.2.2.3 INTCON REGISTER

Applicable Devices	710	71	711	715

The INTCON Register is a readable and writable register which contains various enable and flag bits for the TMR0 register overflow, RB Port change and External RB0/INT pin interrupts.

Note: Interrupt flag bits get set when an interrupt condition occurs regardless of the state of its corresponding enable bit or the global enable bit, GIE (INTCON<7>).

FIGURE 4-9: INTCON REGISTER (ADDRESS 0Bh, 8Bh)

R/W-0	R/W-0	R/W-0	R/W-0	R/W-0	R/W-0	R/W-0	R/W-x
GIE	ADIE	T0IE	INTE	RBIE	T0IF	INTF	RBIF
bit7							bit0

R = Readable bit
W = Writable bit
U = Unimplemented bit, read as '0'
- n = Value at POR reset

bit 7: **GIE:**(1) Global Interrupt Enable bit
1 = Enables all un-masked interrupts
0 = Disables all interrupts

bit 6: **ADIE:** A/D Converter Interrupt Enable bit
1 = Enables A/D interrupt
0 = Disables A/D interrupt

bit 5: **T0IE:** TMR0 Overflow Interrupt Enable bit
1 = Enables the TMR0 interrupt
0 = Disables the TMR0 interrupt

bit 4: **INTE:** RB0/INT External Interrupt Enable bit
1 = Enables the RB0/INT external interrupt
0 = Disables the RB0/INT external interrupt

bit 3: **RBIE:** RB Port Change Interrupt Enable bit
1 = Enables the RB port change interrupt
0 = Disables the RB port change interrupt

bit 2: **T0IF:** TMR0 Overflow Interrupt Flag bit
1 = TMR0 register has overflowed (must be cleared in software)
0 = TMR0 register did not overflow

bit 1: **INTF:** RB0/INT External Interrupt Flag bit
1 = The RB0/INT external interrupt occurred (must be cleared in software)
0 = The RB0/INT external interrupt did not occur

bit 0: **RBIF:** RB Port Change Interrupt Flag bit
1 = At least one of the RB7:RB4 pins changed state (must be cleared in software)
0 = None of the RB7:RB4 pins have changed state

Note 1: For the PIC16C71, if an interrupt occurs while the GIE bit is being cleared, the GIE bit may be unintentionally re-enabled by the `RETFIE` instruction in the user's Interrupt Service Routine. Refer to Section 8.5 for a detailed description.

Interrupt flag bits get set when an interrupt condition occurs regardless of the state of its corresponding enable bit or the global enable bit, GIE (INTCON<7>). User software should ensure the appropriate interrupt flag bits are clear prior to enabling an interrupt.

4.2.2.4 PIE1 REGISTER

Applicable Devices	710	71	711	715

This register contains the individual enable bits for the Peripheral interrupts.

Note: Bit PEIE (INTCON<6>) must be set to enable any peripheral interrupt.

FIGURE 4-10: PIE1 REGISTER (ADDRESS 8Ch)

U-0	R/W-0	U-0	U-0	U-0	U-0	U-0	U-0
—	ADIE	—	—	—	—	—	—
bit7							bit0

R = Readable bit
W = Writable bit
U = Unimplemented bit, read as '0'
- n = Value at POR reset

bit 7: **Unimplemented:** Read as '0'

bit 6: **ADIE:** A/D Converter Interrupt Enable bit
1 = Enables the A/D interrupt
0 = Disables the A/D interrupt

bit 5-0: **Unimplemented:** Read as '0'

© 1997 Microchip Technology Inc.

4.2.2.5 PIR1 REGISTER

Applicable Devices	710	71	711	715

This register contains the individual flag bits for the Peripheral interrupts.

Note: Interrupt flag bits get set when an interrupt condition occurs regardless of the state of its corresponding enable bit or the global enable bit, GIE (INTCON<7>). User software should ensure the appropriate interrupt flag bits are clear prior to enabling an interrupt.

FIGURE 4-11: PIR1 REGISTER (ADDRESS 0Ch)

U-0	R/W-0	U-0	U-0	U-0	U-0	U-0	U-0
—	ADIF	—	—	—	—	—	—
bit7							bit0

R = Readable bit
W = Writable bit
U = Unimplemented bit, read as '0'
- n = Value at POR reset

bit 7: **Unimplemented:** Read as '0'

bit 6: **ADIF:** A/D Converter Interrupt Flag bit
1 = An A/D conversion completed
0 = The A/D conversion is not complete

bit 5-0: **Unimplemented:** Read as '0'

4.2.2.6 PCON REGISTER

Applicable Devices	710	71	711	715

The Power Control (PCON) register contains a flag bit to allow differentiation between a Power-on Reset (POR) to an external $\overline{MCLR}$ Reset or WDT Reset. Those devices with brown-out detection circuitry contain an additional bit to differentiate a Brown-out Reset (BOR) condition from a Power-on Reset condition. For the PIC16C715 the PCON register also contains status bits MPEEN and PER. MPEEN reflects the value of the MPEEN bit in the configuration word. PER indicates a parity error reset has occurred.

Note: $\overline{BOR}$ is unknown on Power-on Reset. It must then be set by the user and checked on subsequent resets to see if $\overline{BOR}$ is clear, indicating a brown-out has occurred. The $\overline{BOR}$ status bit is a don't care and is not necessarily predictable if the brown-out circuit is disabled (by clearing the BODEN bit in the Configuration word).

FIGURE 4-12: PCON REGISTER (ADDRESS 8Eh), PIC16C710/711

U-0	U-0	U-0	U-0	U-0	U-0	R/W-0	R/W-q
—	—	—	—	—	—	$\overline{POR}$	$\overline{BOR}$
bit7							bit0

R = Readable bit
W = Writable bit
U = Unimplemented bit, read as ‘0’
- n = Value at POR reset

bit 7-2: **Unimplemented:** Read as '0'

bit 1: **$\overline{POR}$:** Power-on Reset Status bit
1 = No Power-on Reset occurred
0 = A Power-on Reset occurred (must be set in software after a Power-on Reset occurs)

bit 0: **$\overline{BOR}$:** Brown-out Reset Status bit
1 = No Brown-out Reset occurred
0 = A Brown-out Reset occurred (must be set in software after a Brown-out Reset occurs)

FIGURE 4-13: PCON REGISTER (ADDRESS 8Eh), PIC16C715

R-U	U-0	U-0	U-0	U-0	R/W-1	R/W-0	R/W-q
MPEEN	—	—	—	—	$\overline{PER}$	$\overline{POR}$	$\overline{BOR}$(1)
bit7							bit0

R = Readable bit
W = Writable bit
U = Unimplemented bit, read as ‘0’
- n = Value at POR reset

bit 7: **MPEEN:** Memory Parity Error Circuitry Status bit
Reflects the value of configuration word bit, MPEEN

bit 6-3: **Unimplemented:** Read as '0'

bit 2: **$\overline{PER}$:** Memory Parity Error Reset Status bit
1 = No Error occurred
0 = Program Memory Fetch Parity Error occurred (must be set in software after a Parity Error Reset)

bit 1: **$\overline{POR}$:** Power-on Reset Status bit
1 = No Power-on Reset occurred
0 = A Power-on Reset occurred (must be set in software after a Power-on Reset occurs)

bit 0: **$\overline{BOR}$:** Brown-out Reset Status bit
1 = No Brown-out Reset occurred
0 = A Brown-out Reset occurred (must be set in software after a Brown-out Reset occurs)

© 1997 Microchip Technology Inc.

4.3 PCL and PCLATH

The program counter (PC) is 13-bits wide. The low byte comes from the PCL register, which is a readable and writable register. The upper bits (PC<12:8>) are not readable, but are indirectly writable through the PCLATH register. On any reset, the upper bits of the PC will be cleared. Figure 4-14 shows the two situations for the loading of the PC. The upper example in the figure shows how the PC is loaded on a write to PCL (PCLATH<4:0> → PCH). The lower example in the figure shows how the PC is loaded during a `CALL` or `GOTO` instruction (PCLATH<4:3> → PCH).

FIGURE 4-14: LOADING OF PC IN DIFFERENT SITUATIONS

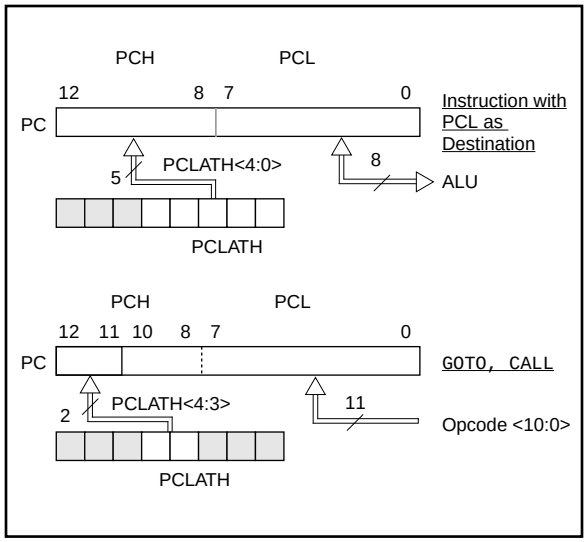

4.3.1 COMPUTED GOTO

A computed GOTO is accomplished by adding an offset to the program counter (`ADDWF PCL`). When doing a table read using a computed GOTO method, care should be exercised if the table location crosses a PCL memory boundary (each 256 byte block). Refer to the application note *"Implementing a Table Read"* (AN556).

4.3.2 STACK

The PIC16CXX family has an 8 level deep x 13-bit wide hardware stack. The stack space is not part of either program or data space and the stack pointer is not readable or writable. The PC is PUSHed onto the stack when a `CALL` instruction is executed or an interrupt causes a branch. The stack is POPed in the event of a `RETURN`, `RETLW` or a `RETFIE` instruction execution. PCLATH is not affected by a PUSH or POP operation.

The stack operates as a circular buffer. This means that after the stack has been PUSHed eight times, the ninth push overwrites the value that was stored from the first push. The tenth push overwrites the second push (and so on).

Note 1: There are no status bits to indicate stack overflow or stack underflow conditions.

Note 2: There are no instructions/mnemonics called PUSH or POP. These are actions that occur from the execution of the `CALL`, `RETURN`, `RETLW`, and `RETFIE` instructions, or the vectoring to an interrupt address.

4.4 Program Memory Paging

The PIC16C71X devices ignore both paging bits (PCLATH<4:3>, which are used to access program memory when more than one page is available. The use of PCLATH<4:3> as general purpose read/write bits for the PIC16C71X is not recommended since this may affect upward compatibility with future products.

Example 4-1 shows the calling of a subroutine in page 1 of the program memory. This example assumes that PCLATH is saved and restored by the interrupt service routine (if interrupts are used).

EXAMPLE 4-1: CALL OF A SUBROUTINE IN PAGE 1 FROM PAGE 0

```
ORG 0x500
BSF     PCLATH,3  ;Select page 1 (800h-FFFh)
BCF     PCLATH,4  ;Only on >4K devices
CALL    SUB1_P1   ;Call subroutine in
        :         ;page 1 (800h-FFFh)
        :
        :
ORG 0x900
SUB1_P1:          ;called subroutine
        :         ;page 1 (800h-FFFh)
        :
RETURN            ;return to Call subroutine
                  ;in page 0 (000h-7FFh)
```

4.5 Indirect Addressing, INDF and FSR Registers

The INDF register is not a physical register. Addressing the INDF register will cause indirect addressing.

Indirect addressing is possible by using the INDF register. Any instruction using the INDF register actually accesses the register pointed to by the File Select Register, FSR. Reading the INDF register itself indirectly (FSR = '0') will read 00h. Writing to the INDF register indirectly results in a no-operation (although status bits may be affected). An effective 9-bit address is obtained by concatenating the 8-bit FSR register and the IRP bit (STATUS<7>), as shown in Figure 4-15. However, IRP is not used in the PIC16C71X devices.

A simple program to clear RAM locations 20h-2Fh using indirect addressing is shown in Example 4-2.

EXAMPLE 4-2: INDIRECT ADDRESSING

```
         movlw  0x20   ;initialize pointer
         movwf  FSR    ;to RAM
NEXT     clrf   INDF   ;clear INDF register
         incf   FSR,F  ;inc pointer
         btfss  FSR,4  ;all done?
         goto   NEXT   ;no clear next
CONTINUE
         :              ;yes continue
```

FIGURE 4-15: DIRECT/INDIRECT ADDRESSING

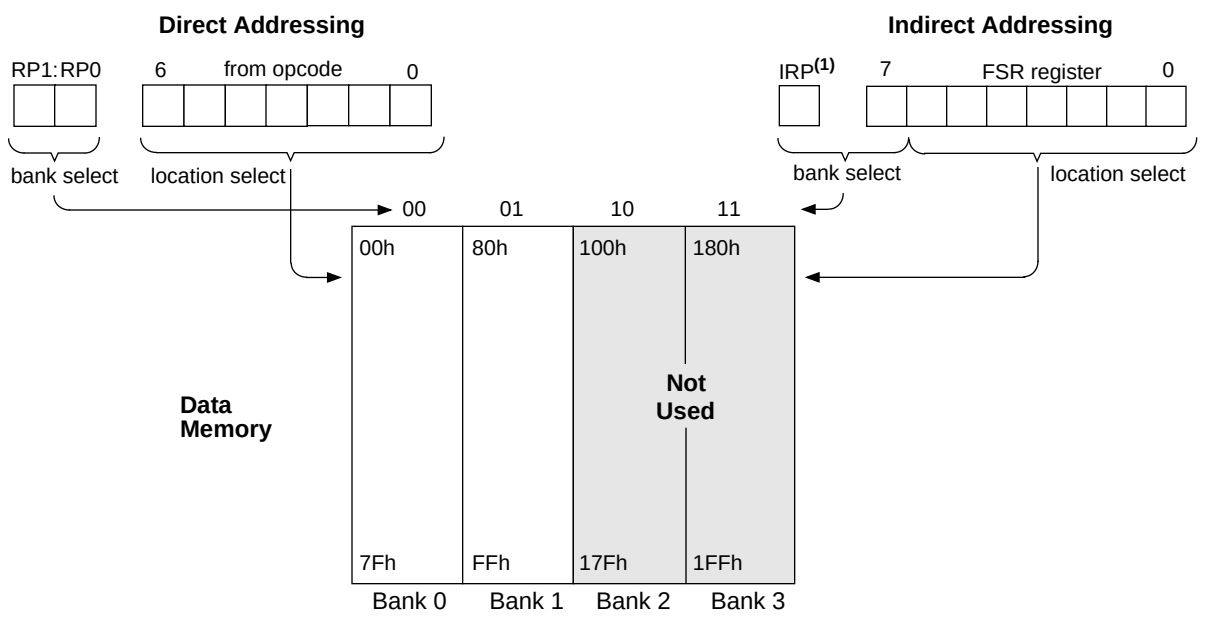

For register file map detail see Figure 4-4.

Note 1: The RP1 and IRP bits are reserved, always maintain these bits clear.

© 1997 Microchip Technology Inc.

5.0 I/O PORTS

Applicable Devices	710	71	711	715

Some pins for these I/O ports are multiplexed with an alternate function for the peripheral features on the device. In general, when a peripheral is enabled, that pin may not be used as a general purpose I/O pin.

5.1 PORTA and TRISA Registers

PORTA is a 5-bit latch.

The RA4/T0CKI pin is a Schmitt Trigger input and an open drain output. All other RA port pins have TTL input levels and full CMOS output drivers. All pins have data direction bits (TRIS registers) which can configure these pins as output or input.

Setting a TRISA register bit puts the corresponding output driver in a hi-impedance mode. Clearing a bit in the TRISA register puts the contents of the output latch on the selected pin(s).

Reading the PORTA register reads the status of the pins whereas writing to it will write to the port latch. All write operations are read-modify-write operations. Therefore a write to a port implies that the port pins are read, this value is modified, and then written to the port data latch.

Pin RA4 is multiplexed with the Timer0 module clock input to become the RA4/T0CKI pin.

Other PORTA pins are multiplexed with analog inputs and analog VREF input. The operation of each pin is selected by clearing/setting the control bits in the ADCON1 register (A/D Control Register1).

Note:	On a Power-on Reset, these pins are configured as analog inputs and read as '0'.

The TRISA register controls the direction of the RA pins, even when they are being used as analog inputs. The user must ensure the bits in the TRISA register are maintained set when using them as analog inputs.

EXAMPLE 5-1: INITIALIZING PORTA

```
BCF     STATUS, RP0  ;
CLRF    PORTA        ; Initialize PORTA by
                     ; clearing output
                     ; data latches
BSF     STATUS, RP0  ; Select Bank 1
MOVLW   0xCF         ; Value used to
                     ; initialize data
                     ; direction
MOVWF   TRISA        ; Set RA<3:0> as inputs
                     ; RA<4> as outputs
                     ; TRISA<7:5> are always
                     ; read as '0'.
```

FIGURE 5-1: BLOCK DIAGRAM OF RA3:RA0 PINS

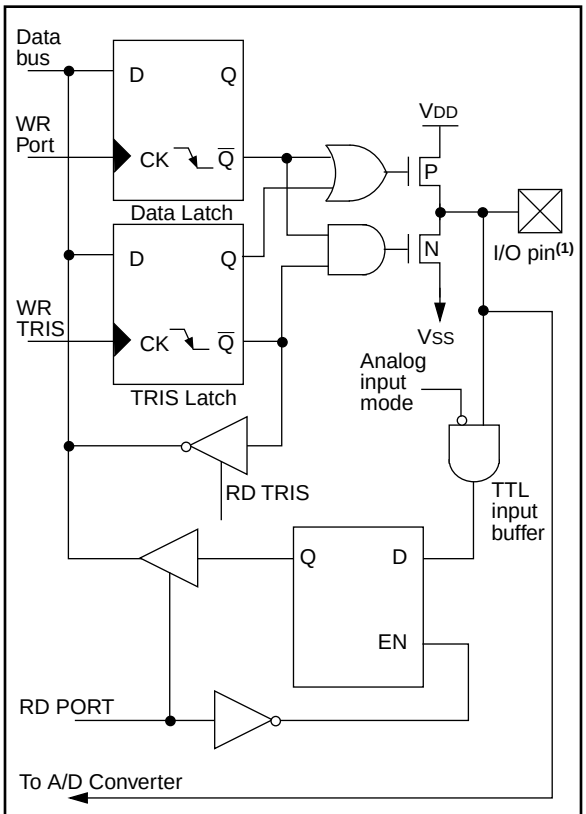

Note 1: I/O pins have protection diodes to VDD and VSS.

FIGURE 5-2: BLOCK DIAGRAM OF RA4/T0CKI PIN

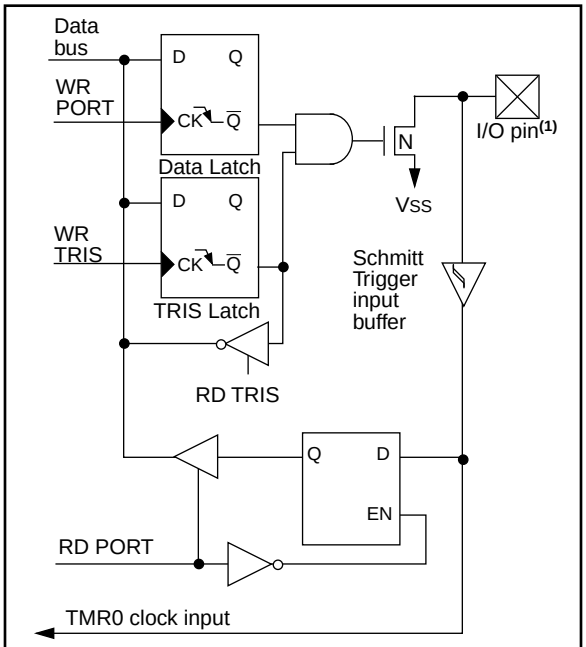

Note 1: I/O pin has protection diodes to VSS only.

TABLE 5-1: PORTA FUNCTIONS

Name	Bit#	Buffer	Function
RA0/AN0	bit0	TTL	Input/output or analog input
RA1/AN1	bit1	TTL	Input/output or analog input
RA2/AN2	bit2	TTL	Input/output or analog input
RA3/AN3/VREF	bit3	TTL	Input/output or analog input/VREF
RA4/T0CKI	bit4	ST	Input/output or external clock input for Timer0 Output is open drain type

Legend: TTL = TTL input, ST = Schmitt Trigger input

TABLE 5-2: SUMMARY OF REGISTERS ASSOCIATED WITH PORTA

Address	Name	Bit 7	Bit 6	Bit 5	Bit 4	Bit 3	Bit 2	Bit 1	Bit 0	Value on: POR, BOR	Value on all other resets
05h	PORTA	—	—	—	RA4	RA3	RA2	RA1	RA0	---x 0000	---u 0000
85h	TRISA	—	—	—	PORTA Data Direction Register					---1 1111	---1 1111
9Fh	ADCON1	—	—	—	—	—	—	PCFG1	PCFG0	---- --00	---- --00

Legend: x = unknown, u = unchanged, - = unimplemented locations read as '0'. Shaded cells are not used by PORTA.

© 1997 Microchip Technology Inc.

5.2 PORTB and TRISB Registers

PORTB is an 8-bit wide bi-directional port. The corresponding data direction register is TRISB. Setting a bit in the TRISB register puts the corresponding output driver in a hi-impedance input mode. Clearing a bit in the TRISB register puts the contents of the output latch on the selected pin(s).

EXAMPLE 5-2: INITIALIZING PORTB

```
BCF     STATUS, RP0  ;
CLRF    PORTB        ; Initialize PORTB by
                     ; clearing output
                     ; data latches
BSF     STATUS, RP0  ; Select Bank 1
MOVLW   0xCF         ; Value used to
                     ; initialize data
                     ; direction
MOVWF   TRISB        ; Set RB<3:0> as inputs
                     ; RB<5:4> as outputs
                     ; RB<7:6> as inputs
```

Each of the PORTB pins has a weak internal pull-up. A single control bit can turn on all the pull-ups. This is performed by clearing bit $\overline{\text{RBPU}}$ (OPTION<7>). The weak pull-up is automatically turned off when the port pin is configured as an output. The pull-ups are disabled on a Power-on Reset.

FIGURE 5-3: BLOCK DIAGRAM OF RB3:RB0 PINS

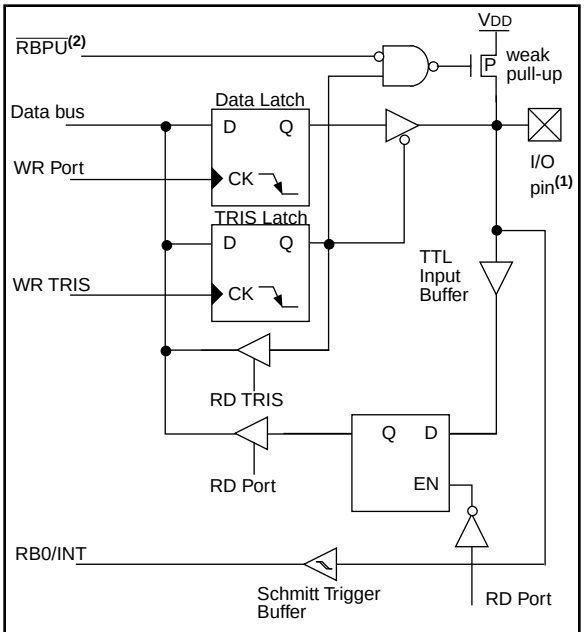

Note 1: I/O pins have diode protection to VDD and VSS.
2: TRISB = '1' enables weak pull-up if $\overline{\text{RBPU}}$ = '0' (OPTION<7>).

Four of PORTB's pins, RB7:RB4, have an interrupt on change feature. Only pins configured as inputs can cause this interrupt to occur (i.e. any RB7:RB4 pin configured as an output is excluded from the interrupt on change comparison). The input pins (of RB7:RB4) are compared with the old value latched on the last read of PORTB. The "mismatch" outputs of RB7:RB4 are OR'ed together to generate the RB Port Change Interrupt with flag bit RBIF (INTCON<0>).

This interrupt can wake the device from SLEEP. The user, in the interrupt service routine, can clear the interrupt in the following manner:

a) Any read or write of PORTB. This will end the mismatch condition.
b) Clear flag bit RBIF.

A mismatch condition will continue to set flag bit RBIF. Reading PORTB will end the mismatch condition, and allow flag bit RBIF to be cleared.

This interrupt on mismatch feature, together with software configurable pull-ups on these four pins allow easy interface to a keypad and make it possible for wake-up on key-depression. Refer to the Embedded Control Handbook, *"Implementing Wake-Up on Key Stroke"* (AN552).

Note:	For the PIC16C71 if a change on the I/O pin should occur when the read operation is being executed (start of the Q2 cycle), then interrupt flag bit RBIF may not get set.

The interrupt on change feature is recommended for wake-up on key depression operation and operations where PORTB is only used for the interrupt on change feature. Polling of PORTB is not recommended while using the interrupt on change feature.

FIGURE 5-4: BLOCK DIAGRAM OF RB7:RB4 PINS (PIC16C71)

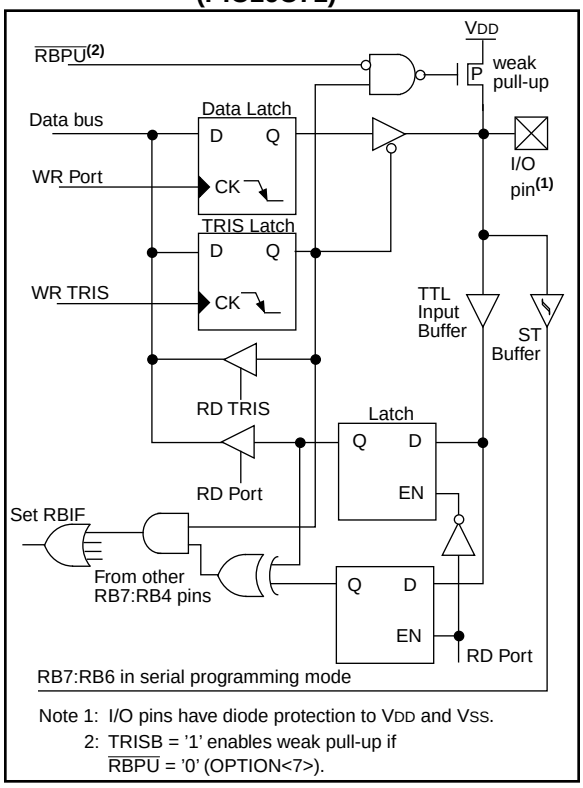

FIGURE 5-5: BLOCK DIAGRAM OF RB7:RB4 PINS (PIC16C710/711/715)

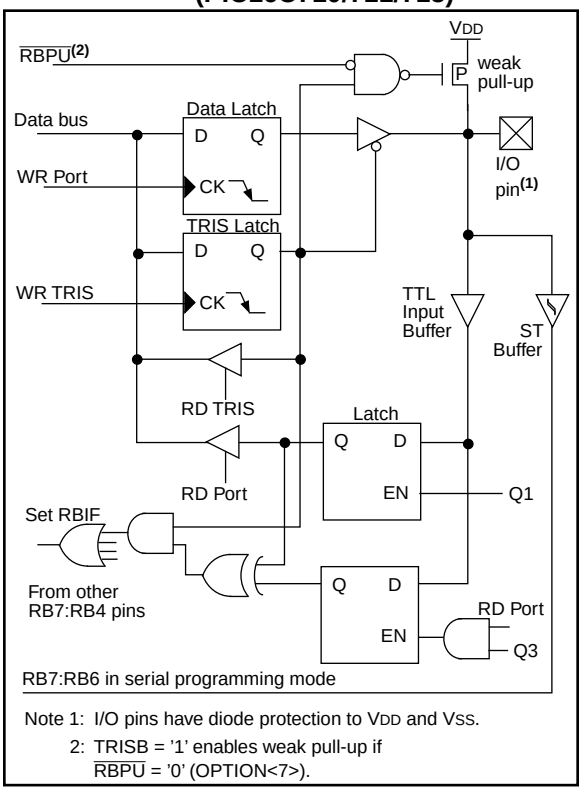

TABLE 5-3: PORTB FUNCTIONS

Name	Bit#	Buffer	Function
RB0/INT	bit0	TTL/ST(1)	Input/output pin or external interrupt input. Internal software programmable weak pull-up.
RB1	bit1	TTL	Input/output pin. Internal software programmable weak pull-up.
RB2	bit2	TTL	Input/output pin. Internal software programmable weak pull-up.
RB3	bit3	TTL	Input/output pin. Internal software programmable weak pull-up.
RB4	bit4	TTL	Input/output pin (with interrupt on change). Internal software programmable weak pull-up.
RB5	bit5	TTL	Input/output pin (with interrupt on change). Internal software programmable weak pull-up.
RB6	bit6	TTL/ST(2)	Input/output pin (with interrupt on change). Internal software programmable weak pull-up. Serial programming clock.
RB7	bit7	TTL/ST(2)	Input/output pin (with interrupt on change). Internal software programmable weak pull-up. Serial programming data.

Legend: TTL = TTL input, ST = Schmitt Trigger input
Note 1: This buffer is a Schmitt Trigger input when configured as the external interrupt.
2: This buffer is a Schmitt Trigger input when used in serial programming mode.

© 1997 Microchip Technology Inc.

TABLE 5-4: SUMMARY OF REGISTERS ASSOCIATED WITH PORTB

Address	Name	Bit 7	Bit 6	Bit 5	Bit 4	Bit 3	Bit 2	Bit 1	Bit 0	Value on: POR, BOR	Value on all other resets
06h, 106h	PORTB	RB7	RB6	RB5	RB4	RB3	RB2	RB1	RB0	xxxx xxxx	uuuu uuuu
86h, 186h	TRISB	PORTB Data Direction Register								1111 1111	1111 1111
81h, 181h	OPTION	$\overline{\text{RBPU}}$	INTEDG	T0CS	T0SE	PSA	PS2	PS1	PS0	1111 1111	1111 1111

Legend: x = unknown, u = unchanged. Shaded cells are not used by PORTB.

5.3 I/O Programming Considerations

5.3.1 BI-DIRECTIONAL I/O PORTS

Any instruction which writes, operates internally as a read followed by a write operation. The BCF and BSF instructions, for example, read the register into the CPU, execute the bit operation and write the result back to the register. Caution must be used when these instructions are applied to a port with both inputs and outputs defined. For example, a BSF operation on bit5 of PORTB will cause all eight bits of PORTB to be read into the CPU. Then the BSF operation takes place on bit5 and PORTB is written to the output latches. If another bit of PORTB is used as a bi-directional I/O pin (e.g., bit0) and it is defined as an input at this time, the input signal present on the pin itself would be read into the CPU and rewritten to the data latch of this particular pin, overwriting the previous content. As long as the pin stays in the input mode, no problem occurs. However, if bit0 is switched to an output, the content of the data latch may now be unknown.

Reading the port register, reads the values of the port pins. Writing to the port register writes the value to the port latch. When using read-modify-write instructions (ex. BCF, BSF, etc.) on a port, the value of the port pins is read, the desired operation is done to this value, and this value is then written to the port latch.

Example 5-3 shows the effect of two sequential read-modify-write instructions on an I/O port.

EXAMPLE 5-3: READ-MODIFY-WRITE INSTRUCTIONS ON AN I/O PORT

```
;Initial PORT settings: PORTB<7:4> Inputs
;                       PORTB<3:0> Outputs
;PORTB<7:6> have external pull-ups and are
;not connected to other circuitry
;
;                     PORT latch  PORT pins
;                     ----------  ---------
  BCF PORTB, 7     ; 01pp pppp    11pp pppp
  BCF PORTB, 6     ; 10pp pppp    11pp pppp
  BSF STATUS, RP0  ;
  BCF TRISB, 7     ; 10pp pppp    11pp pppp
  BCF TRISB, 6     ; 10pp pppp    10pp pppp
;
;Note that the user may have expected the
;pin values to be 00pp ppp. The 2nd BCF
;caused RB7 to be latched as the pin value
;(high).
```

A pin actively outputting a Low or High should not be driven from external devices at the same time in order to change the level on this pin ("wired-or", "wired-and"). The resulting high output currents may damage the chip.

5.3.2 SUCCESSIVE OPERATIONS ON I/O PORTS

The actual write to an I/O port happens at the end of an instruction cycle, whereas for reading, the data must be valid at the beginning of the instruction cycle (Figure 5-6). Therefore, care must be exercised if a write followed by a read operation is carried out on the same I/O port. The sequence of instructions should be such to allow the pin voltage to stabilize (load dependent) before the next instruction which causes that file to be read into the CPU is executed. Otherwise, the previous state of that pin may be read into the CPU rather than the new state. When in doubt, it is better to separate these instructions with a NOP or another instruction not accessing this I/O port.

FIGURE 5-6: SUCCESSIVE I/O OPERATION

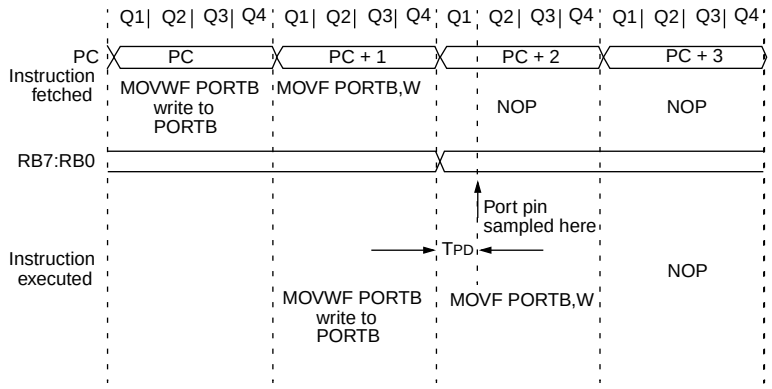

Note:

This example shows a write to PORTB followed by a read from PORTB.

Note that:

data setup time = (0.25TCY - TPD)

where TCY = instruction cycle
TPD = propagation delay

Therefore, at higher clock frequencies, a write followed by a read may be problematic.

© 1997 Microchip Technology Inc.

6.0 TIMER0 MODULE

Applicable Devices	710	71	711	715

The Timer0 module timer/counter has the following features:

- 8-bit timer/counter
- Readable and writable
- 8-bit software programmable prescaler
- Internal or external clock select
- Interrupt on overflow from FFh to 00h
- Edge select for external clock

Figure 6-1 is a simplified block diagram of the Timer0 module.

Timer mode is selected by clearing bit T0CS (OPTION<5>). In timer mode, the Timer0 module will increment every instruction cycle (without prescaler). If the TMR0 register is written, the increment is inhibited for the following two instruction cycles (Figure 6-2 and Figure 6-3). The user can work around this by writing an adjusted value to the TMR0 register.

Counter mode is selected by setting bit T0CS (OPTION<5>). In counter mode, Timer0 will increment either on every rising or falling edge of pin RA4/T0CKI. The incrementing edge is determined by the Timer0 Source Edge Select bit T0SE (OPTION<4>). Clearing bit T0SE selects the rising edge. Restrictions on the external clock input are discussed in detail in Section 6.2.

The prescaler is mutually exclusively shared between the Timer0 module and the Watchdog Timer. The prescaler assignment is controlled in software by control bit PSA (OPTION<3>). Clearing bit PSA will assign the prescaler to the Timer0 module. The prescaler is not readable or writable. When the prescaler is assigned to the Timer0 module, prescale values of 1:2, 1:4, ..., 1:256 are selectable. Section 6.3 details the operation of the prescaler.

6.1 Timer0 Interrupt

The TMR0 interrupt is generated when the TMR0 register overflows from FFh to 00h. This overflow sets bit T0IF (INTCON<2>). The interrupt can be masked by clearing bit T0IE (INTCON<5>). Bit T0IF must be cleared in software by the Timer0 module interrupt service routine before re-enabling this interrupt. The TMR0 interrupt cannot awaken the processor from SLEEP since the timer is shut off during SLEEP. See Figure 6-4 for Timer0 interrupt timing.

FIGURE 6-1: TIMER0 BLOCK DIAGRAM

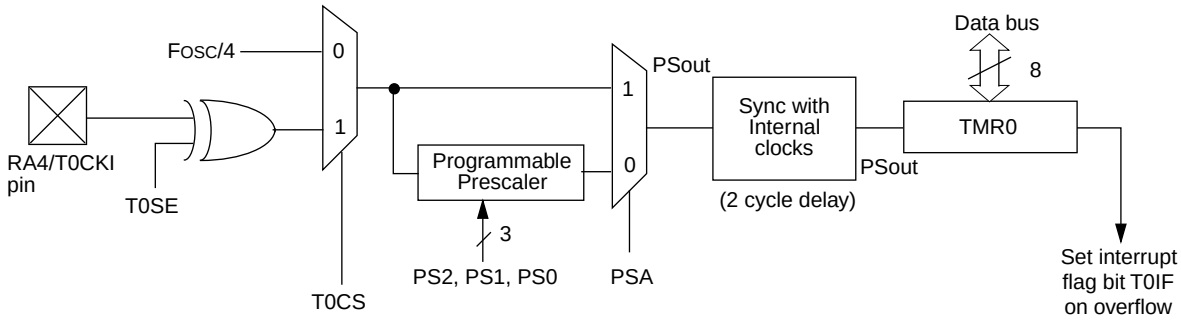

Note 1: T0CS, T0SE, PSA, PS2:PS0 (OPTION<5:0>).
2: The prescaler is shared with Watchdog Timer (refer to Figure 6-6 for detailed block diagram).

FIGURE 6-2: TIMER0 TIMING: INTERNAL CLOCK/NO PRESCALE

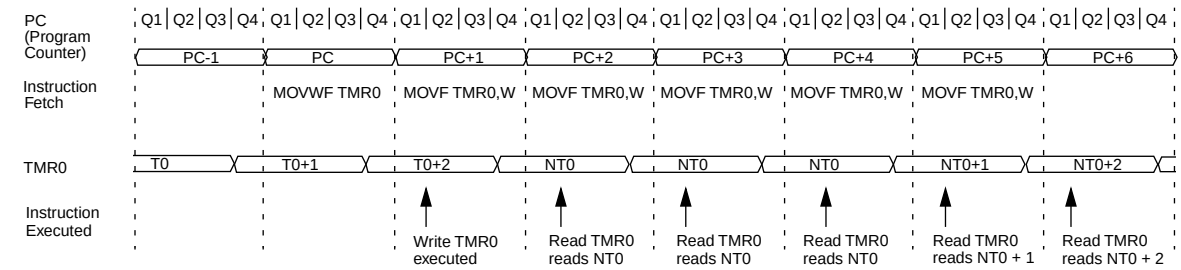

FIGURE 6-3: TIMER0 TIMING: INTERNAL CLOCK/PRESCALE 1:2

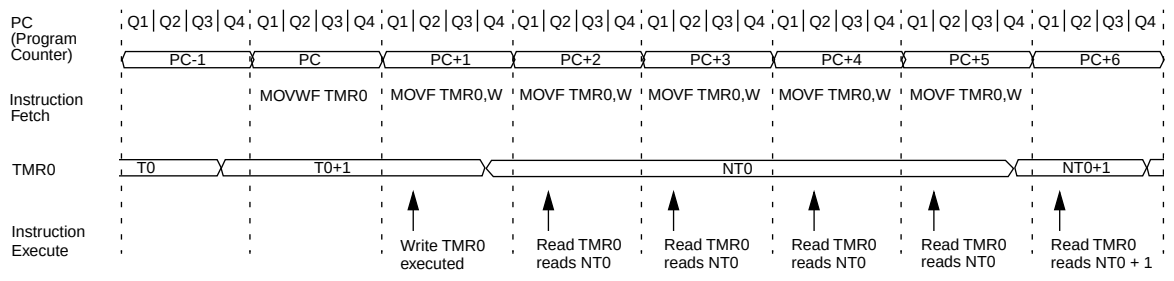

FIGURE 6-4: TIMER0 INTERRUPT TIMING

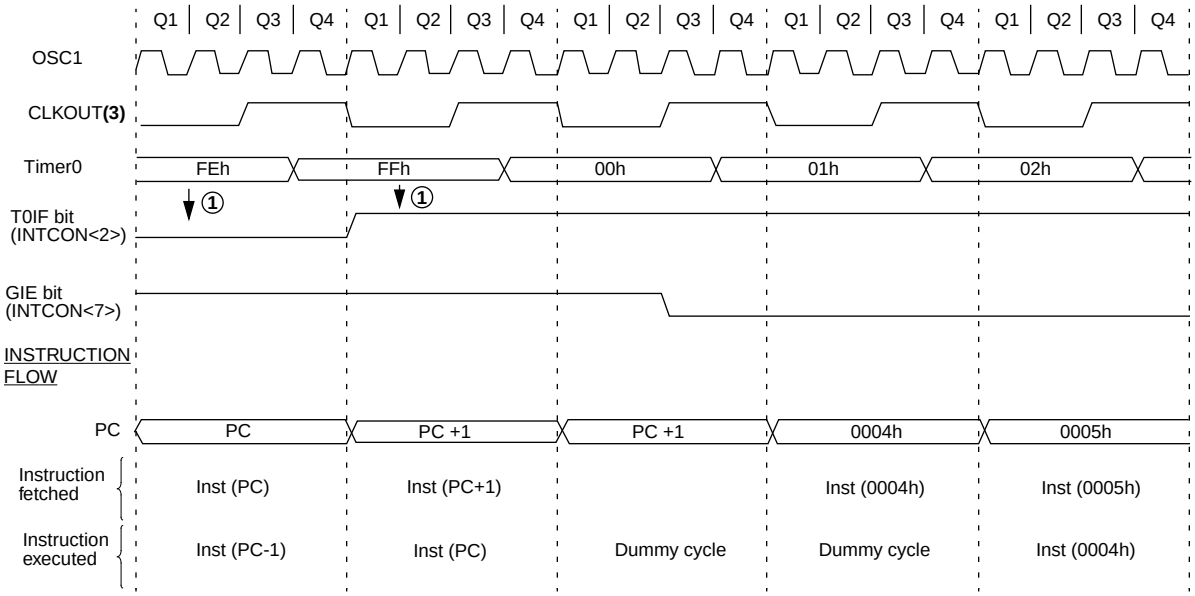

Note 1: Interrupt flag bit T0IF is sampled here (every Q1).
2: Interrupt latency = 4Tcy where Tcy = instruction cycle time.
3: CLKOUT is available only in RC oscillator mode.

© 1997 Microchip Technology Inc.

6.2 Using Timer0 with an External Clock

When an external clock input is used for Timer0, it must meet certain requirements. The requirements ensure the external clock can be synchronized with the internal phase clock (TOSC). Also, there is a delay in the actual incrementing of Timer0 after synchronization.

6.2.1 EXTERNAL CLOCK SYNCHRONIZATION

When no prescaler is used, the external clock input is the same as the prescaler output. The synchronization of T0CKI with the internal phase clocks is accomplished by sampling the prescaler output on the Q2 and Q4 cycles of the internal phase clocks (Figure 6-5). Therefore, it is necessary for T0CKI to be high for at least 2Tosc (and a small RC delay of 20 ns) and low for at least 2Tosc (and a small RC delay of 20 ns). Refer to the electrical specification of the desired device.

When a prescaler is used, the external clock input is divided by the asynchronous ripple-counter type prescaler so that the prescaler output is symmetrical. For the external clock to meet the sampling requirement, the ripple-counter must be taken into account. Therefore, it is necessary for T0CKI to have a period of at least 4Tosc (and a small RC delay of 40 ns) divided by the prescaler value. The only requirement on T0CKI high and low time is that they do not violate the minimum pulse width requirement of 10 ns. Refer to parameters 40, 41 and 42 in the electrical specification of the desired device.

6.2.2 TMR0 INCREMENT DELAY

Since the prescaler output is synchronized with the internal clocks, there is a small delay from the time the external clock edge occurs to the time the Timer0 module is actually incremented. Figure 6-5 shows the delay from the external clock edge to the timer incrementing.

FIGURE 6-5: TIMER0 TIMING WITH EXTERNAL CLOCK

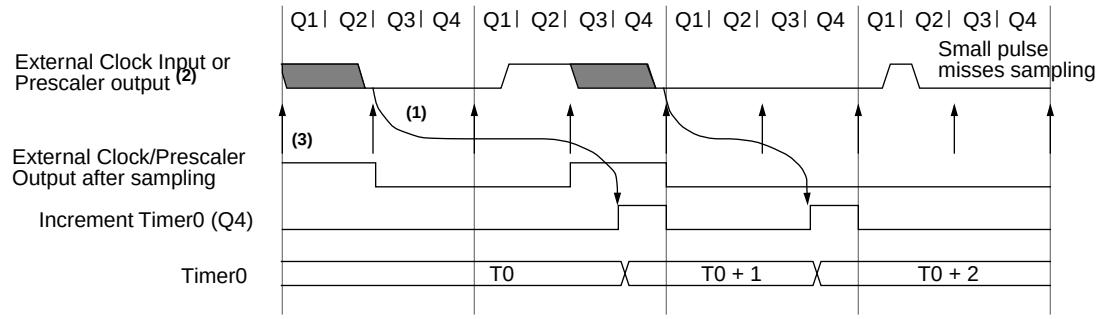

Note 1: Delay from clock input change to Timer0 increment is 3Tosc to 7Tosc. (Duration of Q = Tosc). Therefore, the error in measuring the interval between two edges on Timer0 input = ±4Tosc max.
2: External clock if no prescaler selected, Prescaler output otherwise.
3: The arrows indicate the points in time where sampling occurs.

6.3 Prescaler

An 8-bit counter is available as a prescaler for the Timer0 module, or as a postscaler for the Watchdog Timer, respectively (Figure 6-6). For simplicity, this counter is being referred to as “prescaler” throughout this data sheet. Note that there is only one prescaler available which is mutually exclusively shared between the Timer0 module and the Watchdog Timer. Thus, a prescaler assignment for the Timer0 module means that there is no prescaler for the Watchdog Timer, and vice-versa.

The PSA and PS2:PS0 bits (OPTION<3:0>) determine the prescaler assignment and prescale ratio.

When assigned to the Timer0 module, all instructions writing to the TMR0 register (e.g. `CLRF 1, MOVWF 1, BSF 1,x`....etc.) will clear the prescaler. When assigned to WDT, a `CLRWDT` instruction will clear the prescaler along with the Watchdog Timer. The prescaler is not readable or writable.

Note:	Writing to TMR0 when the prescaler is assigned to Timer0 will clear the prescaler count, but will not change the prescaler assignment.

FIGURE 6-6: BLOCK DIAGRAM OF THE TIMER0/WDT PRESCALER

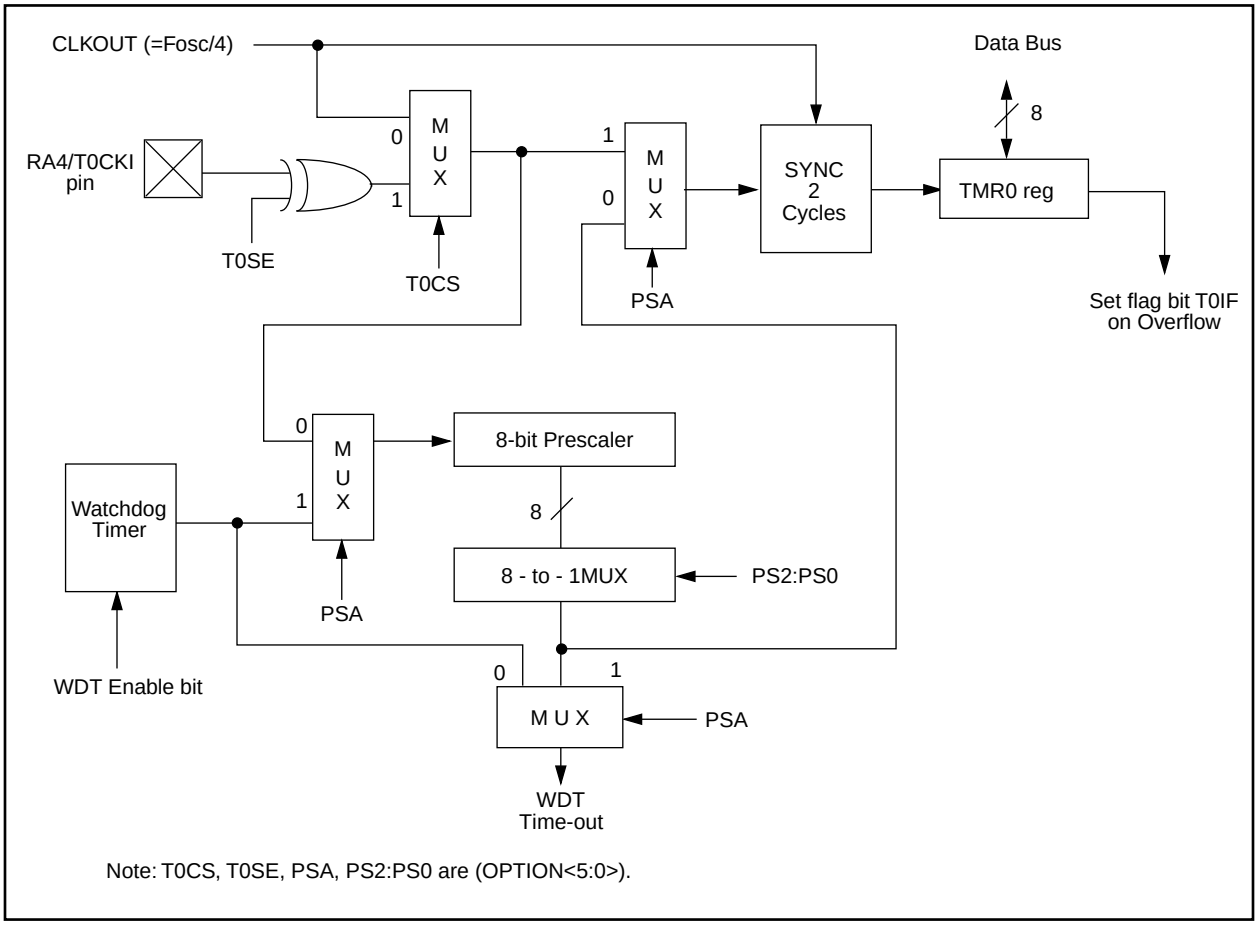

© 1997 Microchip Technology Inc.

6.3.1 SWITCHING PRESCALER ASSIGNMENT

The prescaler assignment is fully under software control, i.e., it can be changed “on the fly” during program execution.

Note: To avoid an unintended device RESET, the following instruction sequence (shown in Example 6-1) must be executed when changing the prescaler assignment from Timer0 to the WDT. This sequence must be followed even if the WDT is disabled.

EXAMPLE 6-1: CHANGING PRESCALER (TIMER0→WDT)

```
BCF    STATUS, RP0  ;Bank 0
CLRF   TMR0         ;Clear TMR0 & Prescaler
BSF    STATUS, RP0  ;Bank 1
CLRWDT              ;Clears WDT
MOVLW  b'xxxx1xxx'  ;Selects new prescale value
MOVWF  OPTION_REG   ;and assigns the prescaler to the WDT
BCF    STATUS, RP0  ;Bank 0
```

To change prescaler from the WDT to the Timer0 module use the sequence shown in Example 6-2.

EXAMPLE 6-2: CHANGING PRESCALER (WDT→TIMER0)

```
CLRWDT               ;Clear WDT and prescaler
BSF      STATUS, RP0 ;Bank 1
MOVLW    b'xxxx0xxx' ;Select TMR0, new prescale value and
MOVWF    OPTION_REG  ;clock source
BCF      STATUS, RP0 ;Bank 0
```

TABLE 6-1: REGISTERS ASSOCIATED WITH TIMER0

Address	Name	Bit 7	Bit 6	Bit 5	Bit 4	Bit 3	Bit 2	Bit 1	Bit 0	Value on: POR, BOR	Value on all other resets
01h	TMR0	Timer0 module’s register								xxxx xxxx	uuuu uuuu
0Bh,8Bh,	INTCON	GIE	ADIE	T0IE	INTE	RBIE	T0IF	INTF	RBIF	0000 000x	0000 000u
81h	OPTION	$\overline{\text{RBPU}}$	INTEDG	T0CS	T0SE	PSA	PS2	PS1	PS0	1111 1111	1111 1111
85h	TRISA	—	—	—	PORTA Data Direction Register					---1 1111	---1 1111

Legend: x = unknown, u = unchanged, - = unimplemented locations read as '0'. Shaded cells are not used by Timer0.

NOTES:

© 1997 Microchip Technology Inc.

7.0 ANALOG-TO-DIGITAL CONVERTER (A/D) MODULE

Applicable Devices	710	71	711	715

The analog-to-digital (A/D) converter module has four analog inputs.

The A/D allows conversion of an analog input signal to a corresponding 8-bit digital number (refer to Application Note AN546 for use of A/D Converter). The output of the sample and hold is the input into the converter, which generates the result via successive approximation. The analog reference voltage is software selectable to either the device's positive supply voltage (V_{DD}) or the voltage level on the RA3/AN3/V_{REF} pin.

The A/D converter has a unique feature of being able to operate while the device is in SLEEP mode. To operate in sleep, the A/D conversion clock must be derived from the A/D's internal RC oscillator.

The A/D module has three registers. These registers are:

- A/D Result Register (ADRES)
- A/D Control Register 0 (ADCON0)
- A/D Control Register 1 (ADCON1)

The ADCON0 register, shown in Figure 7-1 and Figure 7-2, controls the operation of the A/D module. The ADCON1 register, shown in Figure 7-3 configures the functions of the port pins. The port pins can be configured as analog inputs (RA3 can also be a voltage reference) or as digital I/O.

FIGURE 7-1: ADCON0 REGISTER (ADDRESS 08h), PIC16C710/71/711

R/W-0	R/W-0	U-0	R/W-0	R/W-0	R/W-0	R/W-0	R/W-0
ADCS1	ADCS0	__ (1)	CHS1	CHS0	GO/$\overline{\text{DONE}}$	ADIF	ADON
bit7							bit0

R = Readable bit
W = Writable bit
U = Unimplemented bit, read as '0'
- n = Value at POR reset

bit 7-6: **ADCS1:ADCS0:** A/D Conversion Clock Select bits
00 = F_{OSC}/2
01 = F_{OSC}/8
10 = F_{OSC}/32
11 = F_{RC} (clock derived from an RC oscillation)

bit 5: **Unimplemented:** Read as '0'.

bit 4-3: **CHS1:CHS0:** Analog Channel Select bits
00 = channel 0, (RA0/AN0)
01 = channel 1, (RA1/AN1)
10 = channel 2, (RA2/AN2)
11 = channel 3, (RA3/AN3)

bit 2: **GO/$\overline{\text{DONE}}$:** A/D Conversion Status bit

If ADON = 1:
1 = A/D conversion in progress (setting this bit starts the A/D conversion)
0 = A/D conversion not in progress (This bit is automatically cleared by hardware when the A/D conversion is complete)

bit 1: **ADIF:** A/D Conversion Complete Interrupt Flag bit
1 = conversion is complete (must be cleared in software)
0 = conversion is not complete

bit 0: **ADON:** A/D On bit
1 = A/D converter module is operating
0 = A/D converter module is shutoff and consumes no operating current

Note 1: Bit5 of ADCON0 is a General Purpose R/W bit for the PIC16C710/711 only. For the PIC16C71, this bit is unimplemented, read as '0'.

FIGURE 7-2: ADCON0 REGISTER (ADDRESS 1Fh), PIC16C715

R/W-0	R/W-0	R/W-0	R/W-0	R/W-0	R/W-0	U-0	R/W-0
ADCS1	ADCS0	—	CHS1	CHS0	GO/$\overline{\text{DONE}}$	—	ADON
bit7							bit0

R = Readable bit
W = Writable bit
U = Unimplemented bit, read as '0'
- n = Value at POR reset

bit 7-6: **ADCS1:ADCS0:** A/D Conversion Clock Select bits
00 = FOSC/2
01 = FOSC/8
10 = FOSC/32
11 = FRC (clock derived from an RC oscillation)

bit 5: **Unused**

bit 6-3: **CHS1:CHS0:** Analog Channel Select bits
000 = channel 0, (RA0/AN0)
001 = channel 1, (RA1/AN1)
010 = channel 2, (RA2/AN2)
011 = channel 3, (RA3/AN3)
100 = channel 0, (RA0/AN0)
101 = channel 1, (RA1/AN1)
110 = channel 2, (RA2/AN2)
111 = channel 3, (RA3/AN3)

bit 2: **GO/$\overline{\text{DONE}}$:** A/D Conversion Status bit

If ADON = 1
1 = A/D conversion in progress (setting this bit starts the A/D conversion)
0 = A/D conversion not in progress (This bit is automatically cleared by hardware when the A/D conversion is complete)

bit 1: **Unimplemented:** Read as '0'

bit 0: **ADON:** A/D On bit
1 = A/D converter module is operating
0 = A/D converter module is shutoff and consumes no operating current

FIGURE 7-3: ADCON1 REGISTER, PIC16C710/71/711 (ADDRESS 88h), PIC16C715 (ADDRESS 9Fh)

U-0	U-0	U-0	U-0	U-0	U-0	R/W-0	R/W-0
—	—	—	—	—	—	PCFG1	PCFG0
bit7							bit0

R = Readable bit
W = Writable bit
U = Unimplemented bit, read as '0'
- n = Value at POR reset

bit 7-2: **Unimplemented:** Read as '0'

bit 1-0: **PCFG1:PCFG0**: A/D Port Configuration Control bits

PCFG1:PCFG0	RA1 & RA0	RA2	RA3	VREF
00	A	A	A	VDD
01	A	A	VREF	RA3
10	A	D	D	VDD
11	D	D	D	VDD

A = Analog input

D = Digital I/O

© 1997 Microchip Technology Inc.

The ADRES register contains the result of the A/D conversion. When the A/D conversion is complete, the result is loaded into the ADRES register, the GO/$\overline{\text{DONE}}$ bit (ADCON0<2>) is cleared, and A/D interrupt flag bit ADIF is set. The block diagram of the A/D module is shown in Figure 7-4.

After the A/D module has been configured as desired, the selected channel must be acquired before the conversion is started. The analog input channels must have their corresponding TRIS bits selected as an input. To determine acquisition time, see Section 7.1. After this acquisition time has elapsed the A/D conversion can be started. The following steps should be followed for doing an A/D conversion:

1. Configure the A/D module:
   - Configure analog pins / voltage reference / and digital I/O (ADCON1)
   - Select A/D input channel (ADCON0)
   - Select A/D conversion clock (ADCON0)
   - Turn on A/D module (ADCON0)
2. Configure A/D interrupt (if desired):
   - Clear ADIF bit
   - Set ADIE bit
   - Set GIE bit
3. Wait the required acquisition time.
4. Start conversion:
   - Set GO/$\overline{\text{DONE}}$ bit (ADCON0)
5. Wait for A/D conversion to complete, by either:
   - Polling for the GO/$\overline{\text{DONE}}$ bit to be cleared

   OR
   - Waiting for the A/D interrupt
6. Read A/D Result register (ADRES), clear bit ADIF if required.
7. For next conversion, go to step 1 or step 2 as required. The A/D conversion time per bit is defined as T_{AD}. A minimum wait of $2T_{AD}$ is required before next acquisition starts.

FIGURE 7-4: A/D BLOCK DIAGRAM

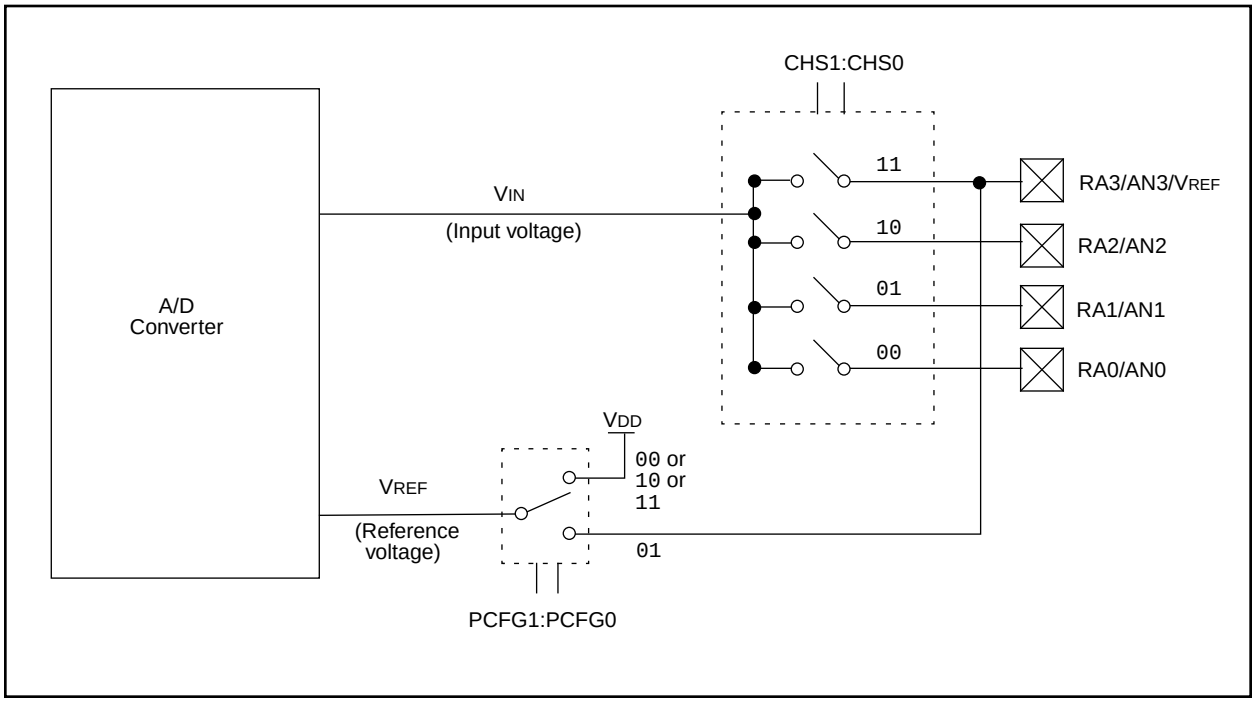

7.1 A/D Acquisition Requirements

For the A/D converter to meet its specified accuracy, the charge holding capacitor (C_{HOLD}) must be allowed to fully charge to the input channel voltage level. The analog input model is shown in Figure 7-5. The source impedance (R_S) and the internal sampling switch (R_{SS}) impedance directly affect the time required to charge the capacitor C_{HOLD}. The sampling switch (R_{SS}) impedance varies over the device voltage (V_{DD}), Figure 7-5. The source impedance affects the offset voltage at the analog input (due to pin leakage current). **The maximum recommended impedance for analog sources is 10 kΩ.** After the analog input channel is selected (changed) this acquisition must be done before the conversion can be started.

To calculate the minimum acquisition time, Equation 7-1 may be used. This equation calculates the acquisition time to within 1/2 LSb error is used (512 steps for the A/D). The 1/2 LSb error is the maximum error allowed for the A/D to meet its specified accuracy.

EQUATION 7-1: A/D MINIMUM CHARGING TIME

$V_{HOLD} = (V_{REF} - (V_{REF}/512)) \cdot (1 - e^{(-T_{CAP}/C_{HOLD}(R_{IC} + R_{SS} + R_S))})$

Given: $V_{HOLD} = (V_{REF}/512)$, for 1/2 LSb resolution

The above equation reduces to:

$T_{CAP} = -(51.2\ pF)(1\ k\Omega + R_{SS} + R_S)\ \ln(1/511)$

Example 7-1 shows the calculation of the minimum required acquisition time T_{ACQ}. This calculation is based on the following system assumptions.

C_{HOLD} = 51.2 pF

Rs = 10 kΩ

1/2 LSb error

V_{DD} = 5V → Rss = 7 kΩ

Temp (application system max.) = 50°C

V_{HOLD} = 0 @ t = 0

Note 1: The reference voltage (V_{REF}) has no effect on the equation, since it cancels itself out.

Note 2: The charge holding capacitor (C_{HOLD}) is not discharged after each conversion.

Note 3: The maximum recommended impedance for analog sources is 10 kΩ. This is required to meet the pin leakage specification.

Note 4: After a conversion has completed, a 2.0T_{AD} delay must complete before acquisition can begin again. During this time the holding capacitor is not connected to the selected A/D input channel.

EXAMPLE 7-1: CALCULATING THE MINIMUM REQUIRED AQUISITION TIME

T_{ACQ} = Amplifier Settling Time +
Holding Capacitor Charging Time +
Temperature Coefficient

T_{ACQ} = 5 µs + T_{CAP} + [(Temp - 25°C)(0.05 µs/°C)]

T_{CAP} = $-C_{HOLD}(R_{IC} + R_{SS} + R_S)\ \ln(1/511)$

-51.2 pF (1 kΩ + 7 kΩ + 10 kΩ) ln(0.0020)

-51.2 pF (18 kΩ) ln(0.0020)

-0.921 µs (-6.2364)

5.747 µs

T_{ACQ} = 5 µs + 5.747 µs + [(50°C - 25°C)(0.05 µs/°C)]

10.747 µs + 1.25 µs

11.997 µs

FIGURE 7-5: ANALOG INPUT MODEL

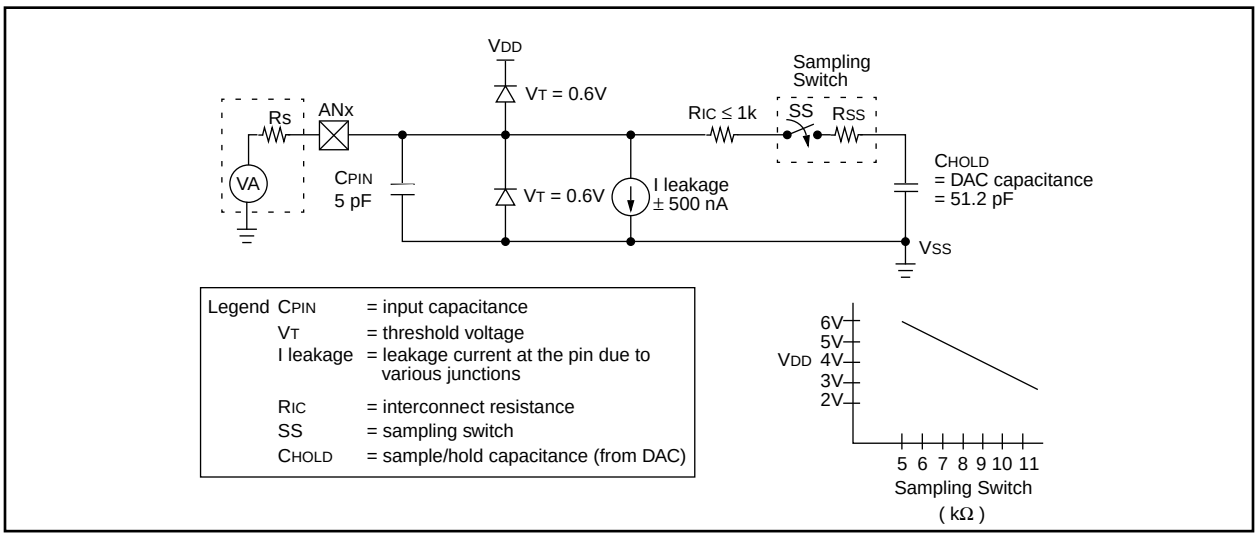

© 1997 Microchip Technology Inc.

7.2 Selecting the A/D Conversion Clock

The A/D conversion time per bit is defined as TAD. The A/D conversion requires 9.5TAD per 8-bit conversion. The source of the A/D conversion clock is software selectable. The four possible options for TAD are:

- 2TOSC
- 8TOSC
- 32TOSC
- Internal RC oscillator

For correct A/D conversions, the A/D conversion clock (TAD) must be selected to ensure a minimum TAD time of:

2.0 µs for the PIC16C71

1.6 µs for all other PIC16C71X devices

Table 7-1 and Table 7-2 and show the resultant TAD times derived from the device operating frequencies and the A/D clock source selected.

7.3 Configuring Analog Port Pins

The ADCON1 and TRISA registers control the operation of the A/D port pins. The port pins that are desired as analog inputs must have their corresponding TRIS bits set (input). If the TRIS bit is cleared (output), the digital output level (VOH or VOL) will be converted.

The A/D operation is independent of the state of the CHS2:CHS0 bits and the TRIS bits.

Note 1: When reading the port register, all pins configured as analog input channels will read as cleared (a low level). Pins configured as digital inputs, will convert an analog input. Analog levels on a digitally configured input will not affect the conversion accuracy.

Note 2: Analog levels on any pin that is defined as a digital input (including the AN7:AN0 pins), may cause the input buffer to consume current that is out of the devices specification.

TABLE 7-1: TAD vs. DEVICE OPERATING FREQUENCIES, PIC16C71

AD Clock Source (TAD)		Device Frequency				
Operation	**ADCS1:ADCS0**	**20 MHz**	**16 MHz**	**4 MHz**	**1 MHz**	**333.33 kHz**
2TOSC	00	100 ns(2)	125 ns(2)	500 ns(2)	2.0 µs	6 µs
8TOSC	01	400 ns(2)	500 ns(2)	2.0 µs	8.0 µs	24 µs(3)
32TOSC	10	1.6 µs(2)	2.0 µs	8.0 µs	32.0 µs(3)	96 µs(3)
RC(5)	11	2 - 6 µs(1,4)	2 - 6 µs(1,4)	2 - 6 µs(1,4)	2 - 6 µs(1)	2 - 6 µs(1)

Legend: Shaded cells are outside of recommended range.
Note 1: The RC source has a typical TAD time of 4 µs.
2: These values violate the minimum required TAD time.
3: For faster conversion times, the selection of another clock source is recommended.
4: When device frequency is greater than 1 MHz, the RC A/D conversion clock source is recommended for sleep operation only.
5: For extended voltage devices (LC), please refer to Electrical Specifications section.

TABLE 7-2: TAD vs. DEVICE OPERATING FREQUENCIES, PIC16C710/711, PIC16C715

AD Clock Source (TAD)		Device Frequency			
Operation	**ADCS1:ADCS0**	**20 MHz**	**5 MHz**	**1.25 MHz**	**333.33 kHz**
2TOSC	00	100 ns(2)	400 ns(2)	1.6 µs	6 µs
8TOSC	01	400 ns(2)	1.6 µs	6.4 µs	24 µs(3)
32TOSC	10	1.6 µs	6.4 µs	25.6 µs(3)	96 µs(3)
RC(5)	11	2 - 6 µs(1,4)	2 - 6 µs(1,4)	2 - 6 µs(1,4)	2 - 6 µs(1)

Legend: Shaded cells are outside of recommended range.
Note 1: The RC source has a typical TAD time of 4 µs.
2: These values violate the minimum required TAD time.
3: For faster conversion times, the selection of another clock source is recommended.
4: When device frequency is greater than 1 MHz, the RC A/D conversion clock source is recommended for sleep operation only.
5: For extended voltage devices (LC), please refer to Electrical Specifications section.

© 1997 Microchip Technology Inc.

7.4 A/D Conversions

Example 7-2 shows how to perform an A/D conversion. The RA pins are configured as analog inputs. The analog reference (VREF) is the device VDD. The A/D interrupt is enabled, and the A/D conversion clock is FRC. The conversion is performed on the RA0 pin (channel 0).

> **Note:** The GO/$\overline{\text{DONE}}$ bit should **NOT** be set in the same instruction that turns on the A/D.

Clearing the GO/$\overline{\text{DONE}}$ bit during a conversion will abort the current conversion. The ADRES register will NOT be updated with the partially completed A/D conversion sample. That is, the ADRES register will continue to contain the value of the last completed conversion (or the last value written to the ADRES register). After the A/D conversion is aborted, a 2TAD wait is required before the next acquisition is started. After this 2TAD wait, an acquisition is automatically started on the selected channel.

EXAMPLE 7-2: A/D CONVERSION

```
     BSF     STATUS, RP0         ; Select Bank 1
     CLRF    ADCON1              ; Configure A/D inputs
     BCF     STATUS, RP0         ; Select Bank 0
     MOVLW   0xC1                ; RC Clock, A/D is on, Channel 0 is selected
     MOVWF   ADCON0              ;
     BSF     INTCON, ADIE        ; Enable A/D Interrupt
     BSF     INTCON, GIE         ; Enable all interrupts
;
;  Ensure that the required sampling time for the selected input channel has elapsed.
;  Then the conversion may be started.
;
     BSF     ADCON0, GO          ; Start A/D Conversion
       :                         ; The ADIF bit will be set and the GO/DONE bit
       :                         ;  is cleared upon completion of the A/D Conversion.
```


© 1997 Microchip Technology Inc.

7.4.1 FASTER CONVERSION - LOWER RESOLUTION TRADE-OFF

Not all applications require a result with 8-bits of resolution, but may instead require a faster conversion time. The A/D module allows users to make the trade-off of conversion speed to resolution. Regardless of the resolution required, the acquisition time is the same. To speed up the conversion, the clock source of the A/D module may be switched so that the T_{AD} time violates the minimum specified time (see the applicable electrical specification). Once the T_{AD} time violates the minimum specified time, all the following A/D result bits are not valid (see A/D Conversion Timing in the Electrical Specifications section.) The clock sources may only be switched between the three oscillator versions (cannot be switched from/to RC). The equation to determine the time before the oscillator can be switched is as follows:

Conversion time = $2T_{AD} + N \bullet T_{AD} + (8 - N)(2T_{OSC})$
Where: N = number of bits of resolution required.

Since the T_{AD} is based from the device oscillator, the user must use some method (a timer, software loop, etc.) to determine when the A/D oscillator may be changed. Example 7-3 shows a comparison of time required for a conversion with 4-bits of resolution, versus the 8-bit resolution conversion. The example is for devices operating at 20 MHz and 16 MHz (The A/D clock is programmed for $32T_{OSC}$), and assumes that immediately after $6T_{AD}$, the A/D clock is programmed for $2T_{OSC}$.

The $2T_{OSC}$ violates the minimum T_{AD} time since the last 4-bits will not be converted to correct values.

EXAMPLE 7-3: 4-BIT vs. 8-BIT CONVERSION TIMES

	Freq. (MHz)(1)	Resolution	
		4-bit	8-bit
T_{AD}	20	1.6 µs	1.6 µs
	16	2.0 µs	2.0 µs
T_{OSC}	20	50 ns	50 ns
	16	62.5 ns	62.5 ns
$2T_{AD} + N \bullet T_{AD} + (8 - N)(2T_{OSC})$	20	10 µs	16 µs
	16	12.5 µs	20 µs

Note 1: The PIC16C71 has a minimum T_{AD} time of 2.0 µs.
All other PIC16C71X devices have a minimum T_{AD} time of 1.6 µs.

7.5 A/D Operation During Sleep

The A/D module can operate during SLEEP mode. This requires that the A/D clock source be set to RC (ADCS1:ADCS0 = 11). When the RC clock source is selected, the A/D module waits one instruction cycle before starting the conversion. This allows the SLEEP instruction to be executed, which eliminates all digital switching noise from the conversion. When the conversion is completed the GO/$\overline{\text{DONE}}$ bit will be cleared, and the result loaded into the ADRES register. If the A/D interrupt is enabled, the device will wake-up from SLEEP. If the A/D interrupt is not enabled, the A/D module will then be turned off, although the ADON bit will remain set.

When the A/D clock source is another clock option (not RC), a SLEEP instruction will cause the present conversion to be aborted and the A/D module to be turned off, though the ADON bit will remain set.

Turning off the A/D places the A/D module in its lowest current consumption state.

Note:	For the A/D module to operate in SLEEP, the A/D clock source must be set to RC (ADCS1:ADCS0 = 11). To perform an A/D conversion in SLEEP, ensure the SLEEP instruction immediately follows the instruction that sets the GO/$\overline{\text{DONE}}$ bit.

7.6 A/D Accuracy/Error

The absolute accuracy specified for the A/D converter includes the sum of all contributions for quantization error, integral error, differential error, full scale error, offset error, and monotonicity. It is defined as the maximum deviation from an actual transition versus an ideal transition for any code. The absolute error of the A/D converter is specified at < ±1 LSb for $V_{DD} = V_{REF}$ (over the device's specified operating range). However, the accuracy of the A/D converter will degrade as V_{DD} diverges from V_{REF}.

For a given range of analog inputs, the output digital code will be the same. This is due to the quantization of the analog input to a digital code. Quantization error is typically ± 1/2 LSb and is inherent in the analog to digital conversion process. The only way to reduce quantization error is to increase the resolution of the A/D converter.

Offset error measures the first actual transition of a code versus the first ideal transition of a code. Offset error shifts the entire transfer function. Offset error can be calibrated out of a system or introduced into a system through the interaction of the total leakage current and source impedance at the analog input.

Gain error measures the maximum deviation of the last actual transition and the last ideal transition adjusted for offset error. This error appears as a change in slope of the transfer function. The difference in gain error to full scale error is that full scale does not take offset error into account. Gain error can be calibrated out in software.

Linearity error refers to the uniformity of the code changes. Linearity errors cannot be calibrated out of the system. Integral non-linearity error measures the actual code transition versus the ideal code transition adjusted by the gain error for each code.

Differential non-linearity measures the maximum actual code width versus the ideal code width. This measure is unadjusted.

In systems where the device frequency is low, use of the A/D RC clock is preferred. At moderate to high frequencies, T_{AD} should be derived from the device oscillator. T_{AD} must not violate the minimum and should be ≤ 8 μs for preferred operation. This is because T_{AD}, when derived from T_{OSC}, is kept away from on-chip phase clock transitions. This reduces, to a large extent, the effects of digital switching noise. This is not possible with the RC derived clock. The loss of accuracy due to digital switching noise can be significant if many I/O pins are active.

In systems where the device will enter SLEEP mode after the start of the A/D conversion, the RC clock source selection is required. In this mode, the digital noise from the modules in SLEEP are stopped. This method gives high accuracy.

7.7 Effects of a RESET

A device reset forces all registers to their reset state. This forces the A/D module to be turned off, and any conversion is aborted.

The value that is in the ADRES register is not modified for a Power-on Reset. The ADRES register will contain unknown data after a Power-on Reset.

7.8 Connection Considerations

If the input voltage exceeds the rail values (V_{SS} or V_{DD}) by greater than 0.2V, then the accuracy of the conversion is out of specification.

Note:	Care must be taken when using the RA0 pin in A/D conversions due to its proximity to the OSC1 pin.

An external RC filter is sometimes added for anti-aliasing of the input signal. The R component should be selected to ensure that the total source impedance is kept under the 10 kΩ recommended specification. Any external components connected (via hi-impedance) to an analog input pin (capacitor, zener diode, etc.) should have very little leakage current at the pin.

© 1997 Microchip Technology Inc.

7.9 Transfer Function

The ideal transfer function of the A/D converter is as follows: the first transition occurs when the analog input voltage (VAIN) is Analog VREF/256 (Figure 7-6).

7.10 References

A very good reference for understanding A/D converters is the "Analog-Digital Conversion Handbook" third edition, published by Prentice Hall (ISBN 0-13-03-2848-0).

FIGURE 7-6: A/D TRANSFER FUNCTION

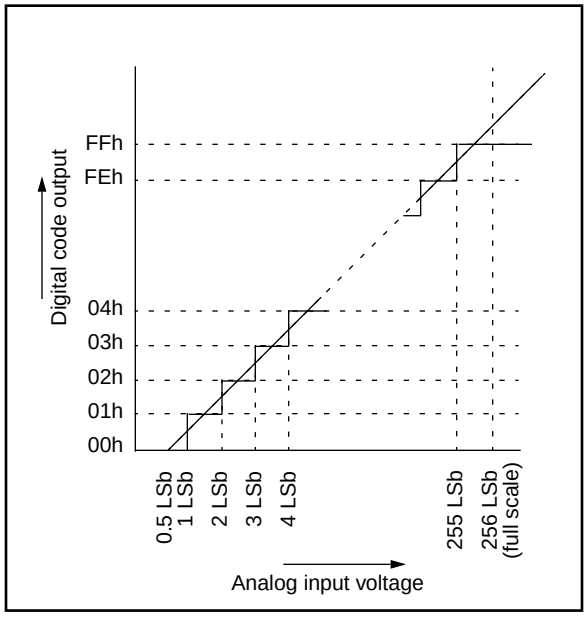

FIGURE 7-7: FLOWCHART OF A/D OPERATION

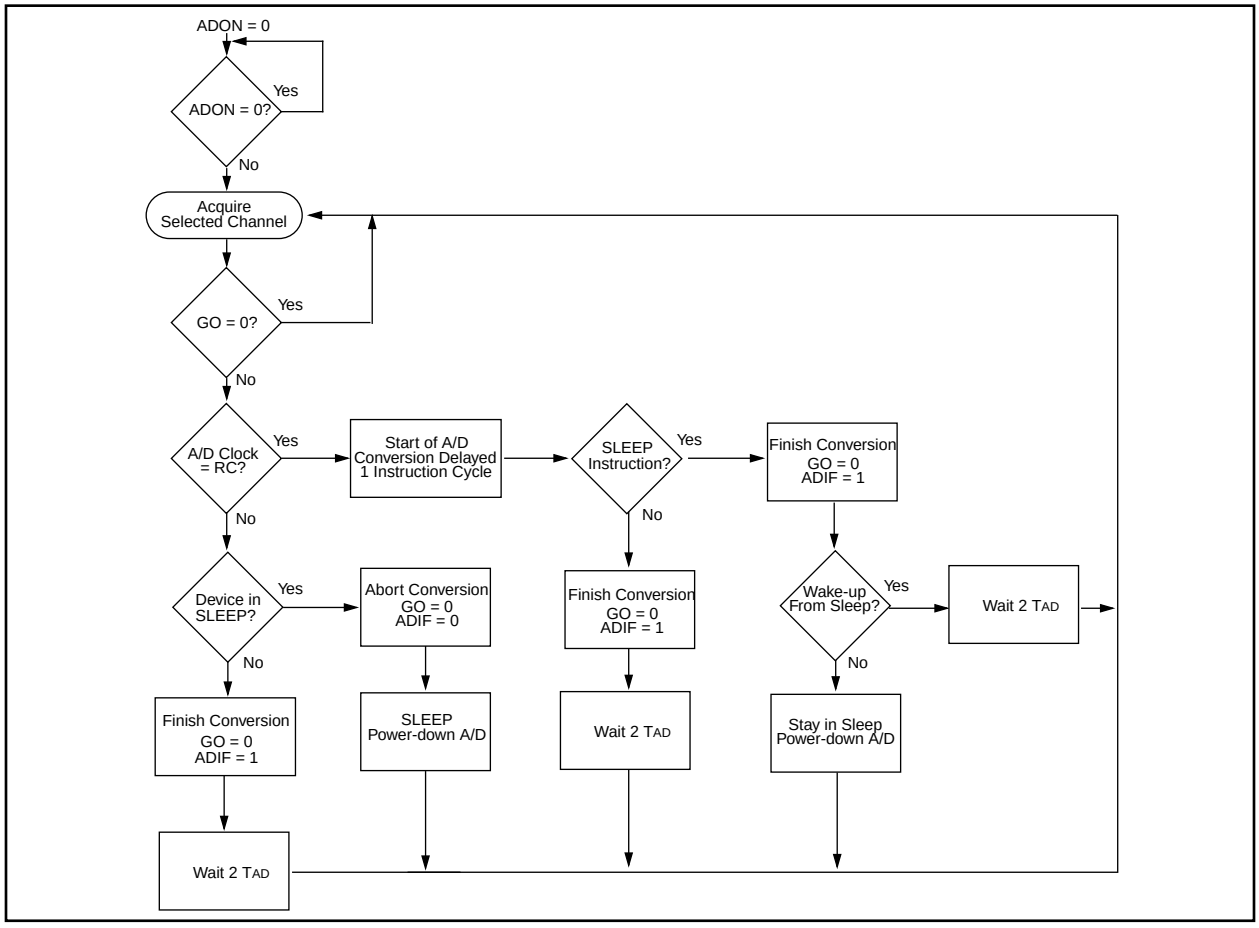

TABLE 7-3: REGISTERS/BITS ASSOCIATED WITH A/D, PIC16C710/71/711

Address	Name	Bit 7	Bit 6	Bit 5	Bit 4	Bit 3	Bit 2	Bit 1	Bit 0	Value on: POR, BOR	Value on all other Resets
0Bh,8Bh	INTCON	GIE	ADIE	T0IE	INTE	RBIE	T0IF	INTF	RBIF	0000 000x	0000 000u
89h	ADRES	A/D Result Register								xxxx xxxx	uuuu uuuu
08h	ADCON0	ADCS1	ADCS0	—	CHS1	CHS0	GO/$\overline{\text{DONE}}$	ADIF	ADON	00-0 0000	00-0 0000
88h	ADCON1	—	—	—	—	—	—	PCFG1	PCFG0	---- --00	---- --00
05h	PORTA	—	—	—	RA4	RA3	RA2	RA1	RA0	---x 0000	---u 0000
85h	TRISA	—	—	—	PORTA Data Direction Register					---1 1111	---1 1111

Legend: x = unknown, u = unchanged, - = unimplemented read as '0'. Shaded cells are not used for A/D conversion.

TABLE 7-4: REGISTERS/BITS ASSOCIATED WITH A/D, PIC16C715

Address	Name	Bit 7	Bit 6	Bit 5	Bit 4	Bit 3	Bit 2	Bit 1	Bit 0	Value on: POR, BOR	Value on all other Resets
0Bh/8Bh	INTCON	GIE	PEIE	T0IE	INTE	RBIE	T0IF	INTF	RBIF	0000 000x	0000 000u
0Ch	PIR1	—	ADIF	—	—	—	—	—	—	-0-- ----	-0-- ----
8Ch	PIE1	—	ADIE	—	—	—	—	—	—	-0-- ----	-0-- ----
1Eh	ADRES	A/D Result Register								xxxx xxxx	uuuu uuuu
1Fh	ADCON 0	ADCS 1	ADCS 0	CHS2	CHS1	CHS0	GO/ $\overline{\text{DONE}}$	—	ADON	0000 00-0	0000 00-0
9Fh	ADCON 1	—	—	—	—	—	—	PCFG1	PCFG0	---- --00	---- --00
05h	PORTA	—	—	—	RA4	RA3	RA2	RA1	RA0	---x 0000	---u 0000
85h	TRISA	—	—	—	TRISA4	TRISA 3	TRISA2	TRISA1	TRISA0	---1 1111	---1 1111

Legend: x = unknown, u = unchanged, - = unimplemented read as '0'. Shaded cells are not used for A/D conversion.

© 1997 Microchip Technology Inc.

8.0 SPECIAL FEATURES OF THE CPU

Applicable Devices	710	71	711	715

What sets a microcontroller apart from other processors are special circuits to deal with the needs of real-time applications. The PIC16CXX family has a host of such features intended to maximize system reliability, minimize cost through elimination of external components, provide power saving operating modes and offer code protection. These are:

- Oscillator selection
- Reset
  - Power-on Reset (POR)
  - Power-up Timer (PWRT)
  - Oscillator Start-up Timer (OST)
  - Brown-out Reset (BOR) (PIC16C710/711/715)
  - Parity Error Reset (PER) (PIC16C715)
- Interrupts
- Watchdog Timer (WDT)
- SLEEP
- Code protection
- ID locations
- In-circuit serial programming

The PIC16CXX has a Watchdog Timer which can be shut off only through configuration bits. It runs off its own RC oscillator for added reliability. There are two timers that offer necessary delays on power-up. One is the Oscillator Start-up Timer (OST), intended to keep the chip in reset until the crystal oscillator is stable. The other is the Power-up Timer (PWRT), which provides a fixed delay of 72 ms (nominal) on power-up only, designed to keep the part in reset while the power supply stabilizes. With these two timers on-chip, most applications need no external reset circuitry.

SLEEP mode is designed to offer a very low current power-down mode. The user can wake-up from SLEEP through external reset, Watchdog Timer Wake-up, or through an interrupt. Several oscillator options are also made available to allow the part to fit the application. The RC oscillator option saves system cost while the LP crystal option saves power. A set of configuration bits are used to select various options.

8.1 Configuration Bits

The configuration bits can be programmed (read as '0') or left unprogrammed (read as '1') to select various device configurations. These bits are mapped in program memory location 2007h.

The user will note that address 2007h is beyond the user program memory space. In fact, it belongs to the special test/configuration memory space (2000h - 3FFFh), which can be accessed only during programming.

FIGURE 8-1: CONFIGURATION WORD FOR PIC16C71

—	—	—	—	—	—	—	—	—	CP0	PWRTE	WDTE	FOSC1	FOSC0
bit13													bit0

Register:	CONFIG
Address	2007h

bit 13-5: **Unimplemented:** Read as '1'

bit 4: **CP0:** Code protection bit
1 = Code protection off
0 = All memory is code protected, but 00h - 3Fh is writable

bit 3: **PWRTE:** Power-up Timer Enable bit
1 = Power-up Timer enabled
0 = Power-up Timer disabled

bit 2: **WDTE:** Watchdog Timer Enable bit
1 = WDT enabled
0 = WDT disabled

bit 1-0: **FOSC1:FOSC0:** Oscillator Selection bits
11 = RC oscillator
10 = HS oscillator
01 = XT oscillator
00 = LP oscillator

FIGURE 8-2: CONFIGURATION WORD, PIC16C710/711

CP0	CP0	CP0	CP0	CP0	CP0	CP0	BODEN	CP0	CP0	$\overline{\text{PWRTE}}$	WDTE	FOSC1	FOSC0
bit13													bit0

Register:	CONFIG
Address	2007h

bit 13-7 **CP0:** Code protection bits [2]
5-4: 1 = Code protection off
0 = All memory is code protected, but 00h - 3Fh is writable

bit 6: **BODEN:** Brown-out Reset Enable bit [1]
1 = BOR enabled
0 = BOR disabled

bit 3: **$\overline{\text{PWRTE}}$:** Power-up Timer Enable bit [1]
1 = PWRT disabled
0 = PWRT enabled

bit 2: **WDTE:** Watchdog Timer Enable bit
1 = WDT enabled
0 = WDT disabled

bit 1-0: **FOSC1:FOSC0:** Oscillator Selection bits
11 = RC oscillator
10 = HS oscillator
01 = XT oscillator
00 = LP oscillator

Note 1: Enabling Brown-out Reset automatically enables Power-up Timer (PWRT) regardless of the value of bit $\overline{\text{PWRTE}}$. Ensure the Power-up Timer is enabled anytime Brown-out Reset is enabled.
2: All of the CP0 bits have to be given the same value to enable the code protection scheme listed.

FIGURE 8-3: CONFIGURATION WORD, PIC16C715

CP1	CP0	CP1	CP0	CP1	CP0	MPEEN	BODEN	CP1	CP0	$\overline{\text{PWRTE}}$	WDTE	FOSC1	FOSC0
bit13													bit0

Register:	CONFIG
Address	2007h

bit 13-8 **CP1:CP0:** Code Protection bits [2]
5-4: 11 = Code protection off
10 = Upper half of program memory code protected
01 = Upper 3/4th of program memory code protected
00 = All memory is code protected

bit 7: **MPEEN:** Memory Parity Error Enable
1 = Memory Parity Checking is enabled
0 = Memory Parity Checking is disabled

bit 6: **BODEN:** Brown-out Reset Enable bit [1]
1 = BOR enabled
0 = BOR disabled

bit 3: **$\overline{\text{PWRTE}}$:** Power-up Timer Enable bit [1]
1 = PWRT disabled
0 = PWRT enabled

bit 2: **WDTE:** Watchdog Timer Enable bit
1 = WDT enabled
0 = WDT disabled

bit 1-0: **FOSC1:FOSC0:** Oscillator Selection bits
11 = RC oscillator
10 = HS oscillator
01 = XT oscillator
00 = LP oscillator

Note 1: Enabling Brown-out Reset automatically enables Power-up Timer (PWRT) regardless of the value of bit $\overline{\text{PWRTE}}$. Ensure the Power-up Timer is enabled anytime Brown-out Reset is enabled.
2: All of the CP1:CP0 pairs have to be given the same value to enable the code protection scheme listed.

© 1997 Microchip Technology Inc.

8.2 Oscillator Configurations

8.2.1 OSCILLATOR TYPES

The PIC16CXX can be operated in four different oscillator modes. The user can program two configuration bits (FOSC1 and FOSC0) to select one of these four modes:

- LP Low Power Crystal
- XT Crystal/Resonator
- HS High Speed Crystal/Resonator
- RC Resistor/Capacitor

8.2.2 CRYSTAL OSCILLATOR/CERAMIC RESONATORS

In XT, LP or HS modes a crystal or ceramic resonator is connected to the OSC1/CLKIN and OSC2/CLKOUT pins to establish oscillation (Figure 8-4). The PIC16CXX Oscillator design requires the use of a parallel cut crystal. Use of a series cut crystal may give a frequency out of the crystal manufacturers specifications. When in XT, LP or HS modes, the device can have an external clock source to drive the OSC1/CLKIN pin (Figure 8-5).

FIGURE 8-4: CRYSTAL/CERAMIC RESONATOR OPERATION (HS, XT OR LP OSC CONFIGURATION)

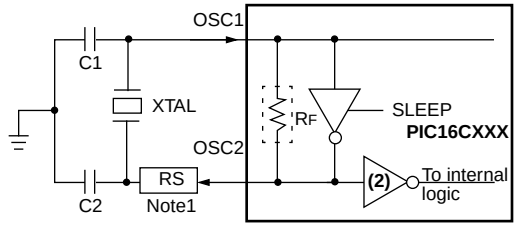

See Table 8-1 and Table 8-1 for recommended values of C1 and C2.

Note 1: A series resistor may be required for AT strip cut crystals.
2: The buffer is on the OSC2 pin.

FIGURE 8-5: EXTERNAL CLOCK INPUT OPERATION (HS, XT OR LP OSC CONFIGURATION)

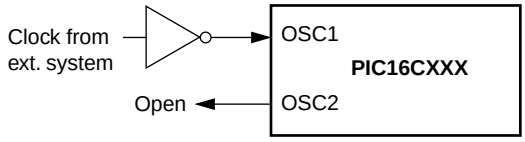

TABLE 8-1: CERAMIC RESONATORS, PIC16C71

Ranges Tested:			
Mode	**Freq**	**OSC1**	**OSC2**
XT	455 kHz 2.0 MHz 4.0 MHz	47 - 100 pF 15 - 68 pF 15 - 68 pF	47 - 100 pF 15 - 68 pF 15 - 68 pF
HS	8.0 MHz 16.0 MHz	15 - 68 pF 10 - 47 pF	15 - 68 pF 10 - 47 pF
These values are for design guidance only. See notes at bottom of page.			
Resonators Used:			
455 kHz	Panasonic EFO-A455K04B	± 0.3%	
2.0 MHz	Murata Erie CSA2.00MG	± 0.5%	
4.0 MHz	Murata Erie CSA4.00MG	± 0.5%	
8.0 MHz	Murata Erie CSA8.00MT	± 0.5%	
16.0 MHz	Murata Erie CSA16.00MX	± 0.5%	
All resonators used did not have built-in capacitors.			

TABLE 8-2: CAPACITOR SELECTION FOR CRYSTAL OSCILLATOR, PIC16C71

Mode	Freq	OSC1	OSC2
LP	32 kHz 200 kHz	33 - 68 pF 15 - 47 pF	33 - 68 pF 15 - 47 pF
XT	100 kHz 500 kHz 1 MHz 2 MHz 4 MHz	47 - 100 pF 20 - 68 pF 15 - 68 pF 15 - 47 pF 15 - 33 pF	47 - 100 pF 20 - 68 pF 15 - 68 pF 15 - 47 pF 15 - 33 pF
HS	8 MHz 20 MHz	15 - 47 pF 15 - 47 pF	15 - 47 pF 15 - 47 pF
These values are for design guidance only. See notes at bottom of page.			

TABLE 8-3: CERAMIC RESONATORS, PIC16C710/711/715

Ranges Tested:			
Mode	**Freq**	**OSC1**	**OSC2**
XT	455 kHz 2.0 MHz 4.0 MHz	68 - 100 pF 15 - 68 pF 15 - 68 pF	68 - 100 pF 15 - 68 pF 15 - 68 pF
HS	8.0 MHz 16.0 MHz	10 - 68 pF 10 - 22 pF	10 - 68 pF 10 - 22 pF
These values are for design guidance only. See notes at bottom of page.			
Resonators Used:			
455 kHz	Panasonic EFO-A455K04B	± 0.3%	
2.0 MHz	Murata Erie CSA2.00MG	± 0.5%	
4.0 MHz	Murata Erie CSA4.00MG	± 0.5%	
8.0 MHz	Murata Erie CSA8.00MT	± 0.5%	
16.0 MHz	Murata Erie CSA16.00MX	± 0.5%	
All resonators used did not have built-in capacitors.			

TABLE 8-4: CAPACITOR SELECTION FOR CRYSTAL OSCILLATOR, PIC16C710/711/715

Osc Type	Crystal Freq	Cap. Range C1	Cap. Range C2
LP	32 kHz	33 pF	33 pF
	200 kHz	15 pF	15 pF
XT	200 kHz	47-68 pF	47-68 pF
	1 MHz	15 pF	15 pF
	4 MHz	15 pF	15 pF
HS	4 MHz	15 pF	15 pF
	8 MHz	15-33 pF	15-33 pF
	20 MHz	15-33 pF	15-33 pF
These values are for design guidance only. See notes at bottom of page.			
Crystals Used			
32 kHz	Epson C-001R32.768K-A	± 20 PPM	
200 kHz	STD XTL 200.000KHz	± 20 PPM	
1 MHz	ECS ECS-10-13-1	± 50 PPM	
4 MHz	ECS ECS-40-20-1	± 50 PPM	
8 MHz	EPSON CA-301 8.000M-C	± 30 PPM	
20 MHz	EPSON CA-301 20.000M-C	± 30 PPM	

Note 1: Recommended values of C1 and C2 are identical to the ranges tested table.
2: Higher capacitance increases the stability of oscillator but also increases the start-up time.
3: Since each resonator/crystal has its own characteristics, the user should consult the resonator/crystal manufacturer for appropriate values of external components.
4: Rs may be required in HS mode as well as XT mode to avoid overdriving crystals with low drive level specification.

© 1997 Microchip Technology Inc.

8.2.3 EXTERNAL CRYSTAL OSCILLATOR CIRCUIT

Either a prepackaged oscillator can be used or a simple oscillator circuit with TTL gates can be built. Prepackaged oscillators provide a wide operating range and better stability. A well-designed crystal oscillator will provide good performance with TTL gates. Two types of crystal oscillator circuits can be used; one with series resonance, or one with parallel resonance.

Figure 8-6 shows implementation of a parallel resonant oscillator circuit. The circuit is designed to use the fundamental frequency of the crystal. The 74AS04 inverter performs the 180-degree phase shift that a parallel oscillator requires. The 4.7 kΩ resistor provides the negative feedback for stability. The 10 kΩ potentiometer biases the 74AS04 in the linear region. This could be used for external oscillator designs.

FIGURE 8-6: EXTERNAL PARALLEL RESONANT CRYSTAL OSCILLATOR CIRCUIT

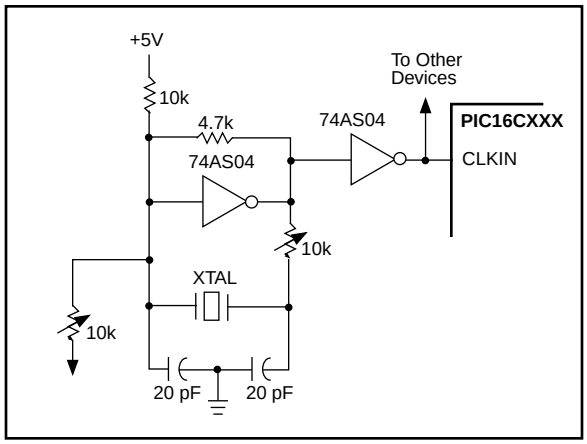

Figure 8-7 shows a series resonant oscillator circuit. This circuit is also designed to use the fundamental frequency of the crystal. The inverter performs a 180-degree phase shift in a series resonant oscillator circuit. The 330 kΩ resistors provide the negative feedback to bias the inverters in their linear region.

FIGURE 8-7: EXTERNAL SERIES RESONANT CRYSTAL OSCILLATOR CIRCUIT

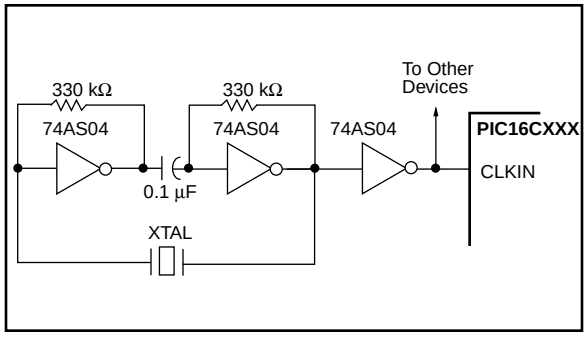

8.2.4 RC OSCILLATOR

For timing insensitive applications the "RC" device option offers additional cost savings. The RC oscillator frequency is a function of the supply voltage, the resistor (Rext) and capacitor (Cext) values, and the operating temperature. In addition to this, the oscillator frequency will vary from unit to unit due to normal process parameter variation. Furthermore, the difference in lead frame capacitance between package types will also affect the oscillation frequency, especially for low Cext values. The user also needs to take into account variation due to tolerance of external R and C components used. Figure 8-8 shows how the R/C combination is connected to the PIC16CXX. For Rext values below 2.2 kΩ, the oscillator operation may become unstable, or stop completely. For very high Rext values (e.g. 1 MΩ), the oscillator becomes sensitive to noise, humidity and leakage. Thus, we recommend to keep Rext between 3 kΩ and 100 kΩ.

Although the oscillator will operate with no external capacitor (Cext = 0 pF), we recommend using values above 20 pF for noise and stability reasons. With no or small external capacitance, the oscillation frequency can vary dramatically due to changes in external capacitances, such as PCB trace capacitance or package lead frame capacitance.

See characterization data for desired device for RC frequency variation from part to part due to normal process variation. The variation is larger for larger R (since leakage current variation will affect RC frequency more for large R) and for smaller C (since variation of input capacitance will affect RC frequency more).

See characterization data for desired device for variation of oscillator frequency due to V_{DD} for given Rext/Cext values as well as frequency variation due to operating temperature for given R, C, and V_{DD} values.

The oscillator frequency, divided by 4, is available on the OSC2/CLKOUT pin, and can be used for test purposes or to synchronize other logic (see Figure 3-2 for waveform).

FIGURE 8-8: RC OSCILLATOR MODE

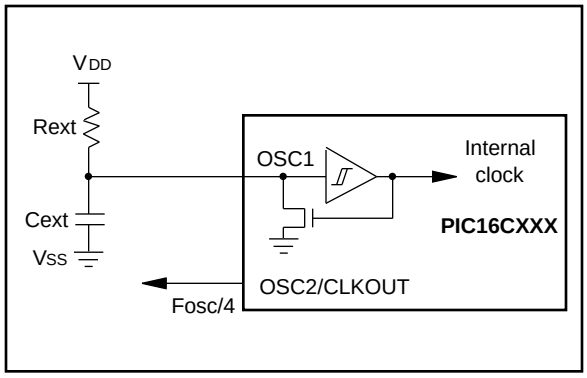

8.3 Reset

Applicable Devices	710	71	711	715

The PIC16CXX differentiates between various kinds of reset:

- Power-on Reset (POR)
- $\overline{\text{MCLR}}$ reset during normal operation
- $\overline{\text{MCLR}}$ reset during SLEEP
- WDT Reset (normal operation)
- Brown-out Reset (BOR) (PIC16C710/711/715)
- Parity Error Reset (PIC16C715)

Some registers are not affected in any reset condition; their status is unknown on POR and unchanged in any other reset. Most other registers are reset to a "reset state" on Power-on Reset (POR), on the $\overline{\text{MCLR}}$ and WDT Reset, on $\overline{\text{MCLR}}$ reset during SLEEP, and Brown-out Reset (BOR). They are not affected by a WDT Wake-up, which is viewed as the resumption of normal operation. The $\overline{\text{TO}}$ and $\overline{\text{PD}}$ bits are set or cleared differently in different reset situations as indicated in Table 8-7, Table 8-8 and Table 8-9. These bits are used in software to determine the nature of the reset. See Table 8-10 and Table 8-11 for a full description of reset states of all registers.

A simplified block diagram of the on-chip reset circuit is shown in Figure 8-9.

The PIC16C710/711/715 have a $\overline{\text{MCLR}}$ noise filter in the $\overline{\text{MCLR}}$ reset path. The filter will detect and ignore small pulses.

It should be noted that a WDT Reset does not drive $\overline{\text{MCLR}}$ pin low.

FIGURE 8-9: SIMPLIFIED BLOCK DIAGRAM OF ON-CHIP RESET CIRCUIT

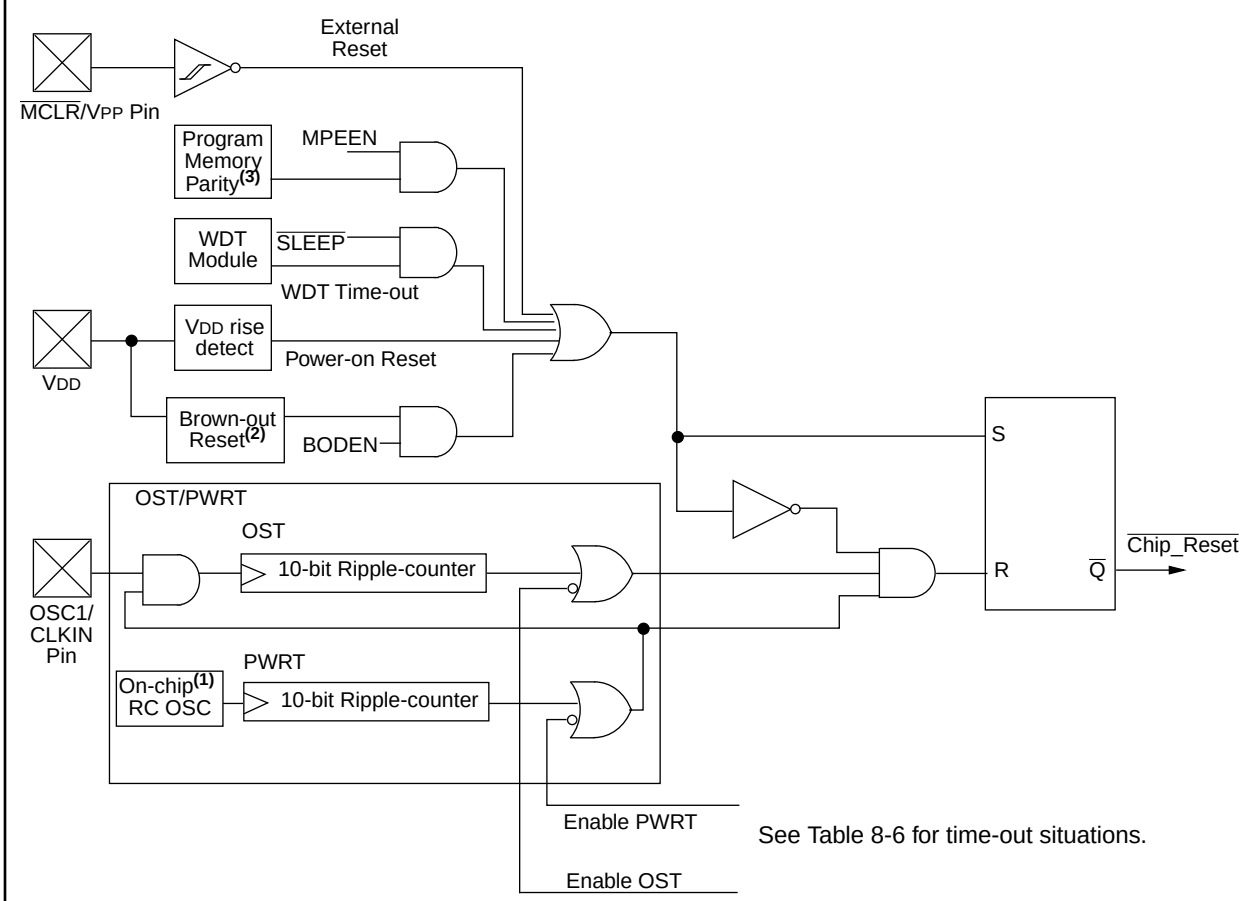

Note 1: This is a separate oscillator from the RC oscillator of the CLKIN pin.
2: Brown-out Reset is implemented on the PIC16C710/711/715.
3: Parity Error Reset is implemented on the PIC16C715.

© 1997 Microchip Technology Inc.

8.4 Power-on Reset (POR), Power-up Timer (PWRT) and Oscillator Start-up Timer (OST), and Brown-out Reset (BOR)

8.4.1 POWER-ON RESET (POR)

Applicable Devices	710	71	711	715

A Power-on Reset pulse is generated on-chip when VDD rise is detected (in the range of 1.5V - 2.1V). To take advantage of the POR, just tie the $\overline{MCLR}$ pin directly (or through a resistor) to VDD. This will eliminate external RC components usually needed to create a Power-on Reset. A maximum rise time for VDD is specified. See Electrical Specifications for details.

When the device starts normal operation (exits the reset condition), device operating parameters (voltage, frequency, temperature, ...) must be met to ensure operation. If these conditions are not met, the device must be held in reset until the operating conditions are met. Brown-out Reset may be used to meet the startup conditions.

For additional information, refer to Application Note AN607, "*Power-up Trouble Shooting*."

8.4.2 POWER-UP TIMER (PWRT)

Applicable Devices	710	71	711	715

The Power-up Timer provides a fixed 72 ms nominal time-out on power-up only, from the POR. The Power-up Timer operates on an internal RC oscillator. The chip is kept in reset as long as the PWRT is active. The PWRT's time delay allows VDD to rise to an acceptable level. A configuration bit is provided to enable/disable the PWRT.

The power-up time delay will vary from chip to chip due to VDD, temperature, and process variation. See DC parameters for details.

8.4.3 OSCILLATOR START-UP TIMER (OST)

Applicable Devices	710	71	711	715

The Oscillator Start-up Timer (OST) provides 1024 oscillator cycle (from OSC1 input) delay after the PWRT delay is over. This ensures that the crystal oscillator or resonator has started and stabilized.

The OST time-out is invoked only for XT, LP and HS modes and only on Power-on Reset or wake-up from SLEEP.

8.4.4 BROWN-OUT RESET (BOR)

Applicable Devices	710	71	711	715

A configuration bit, BODEN, can disable (if clear/programmed) or enable (if set) the Brown-out Reset circuitry. If VDD falls below 4.0V (3.8V - 4.2V range) for greater than parameter #35, the brown-out situation will reset the chip. A reset may not occur if VDD falls below 4.0V for less than parameter #35. The chip will remain in Brown-out Reset until VDD rises above BVDD. The Power-up Timer will now be invoked and will keep the chip in RESET an additional 72 ms. If VDD drops below BVDD while the Power-up Timer is running, the chip will go back into a Brown-out Reset and the Power-up Timer will be initialized. Once VDD rises above BVDD, the Power-up Timer will execute a 72 ms time delay. The Power-up Timer should always be enabled when Brown-out Reset is enabled. Figure 8-10 shows typical brown-out situations.

FIGURE 8-10: BROWN-OUT SITUATIONS

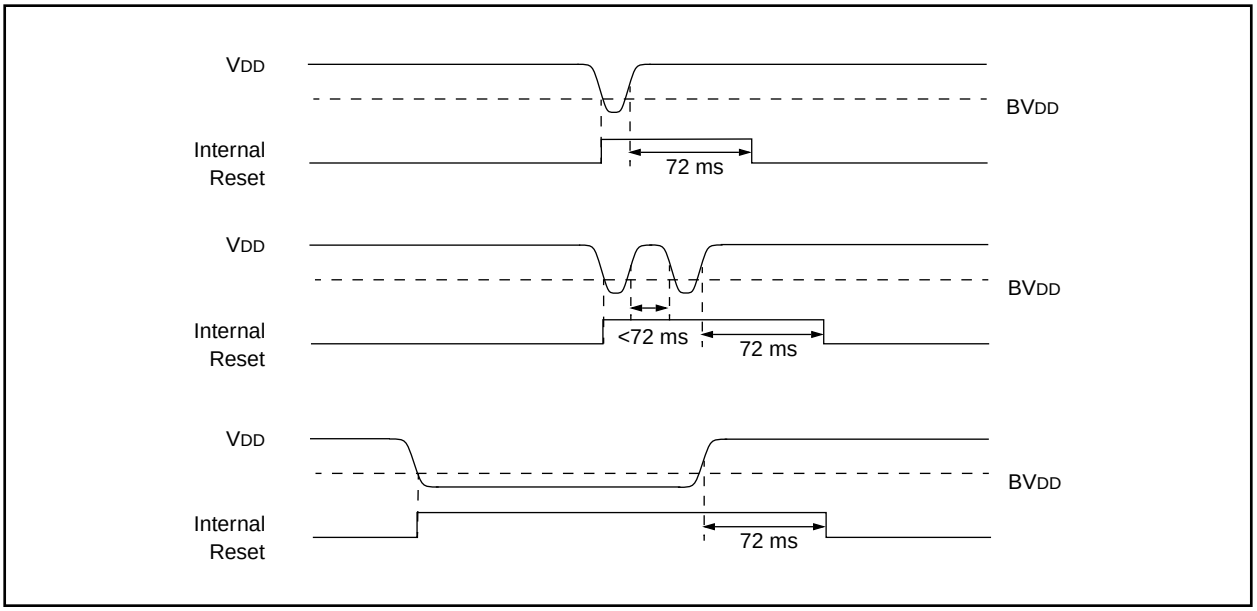

8.4.5 TIME-OUT SEQUENCE

Applicable Devices	710	71	711	715

On power-up the time-out sequence is as follows: First PWRT time-out is invoked after the POR time delay has expired. Then OST is activated. The total time-out will vary based on oscillator configuration and the status of the PWRT. For example, in RC mode with the PWRT disabled, there will be no time-out at all. Figure 8-11, Figure 8-12, and Figure 8-13 depict time-out sequences on power-up.

Since the time-outs occur from the POR pulse, if $\overline{\text{MCLR}}$ is kept low long enough, the time-outs will expire. Then bringing $\overline{\text{MCLR}}$ high will begin execution immediately (Figure 8-12). This is useful for testing purposes or to synchronize more than one PIC16CXX device operating in parallel.

Table 8-10 and Table 8-11 show the reset conditions for some special function registers, while Table 8-12 and Table 8-13 show the reset conditions for all the registers.

8.4.6 POWER CONTROL/STATUS REGISTER (PCON)

Applicable Devices	710	71	711	715

The Power Control/Status Register, PCON has up to two bits, depending upon the device.

Bit0 is Brown-out Reset Status bit, $\overline{\text{BOR}}$. Bit $\overline{\text{BOR}}$ is unknown on a Power-on Reset. It must then be set by the user and checked on subsequent resets to see if bit $\overline{\text{BOR}}$ cleared, indicating a BOR occurred. The $\overline{\text{BOR}}$ bit is a "Don't Care" bit and is not necessarily predictable if the Brown-out Reset circuitry is disabled (by clearing bit BODEN in the Configuration Word).

Bit1 is $\overline{\text{POR}}$ (Power-on Reset Status bit). It is cleared on a Power-on Reset and unaffected otherwise. The user must set this bit following a Power-on Reset.

For the PIC16C715, bit2 is $\overline{\text{PER}}$ (Parity Error Reset). It is cleared on a Parity Error Reset and must be set by user software. It will also be set on a Power-on Reset.

For the PIC16C715, bit7 is MPEEN (Memory Parity Error Enable). This bit reflects the status of the MPEEN bit in configuration word. It is unaffected by any reset of interrupt.

8.4.7 PARITY ERROR RESET (PER)

Applicable Devices	710	71	711	715

The PIC16C715 has on-chip parity bits that can be used to verify the contents of program memory. Parity bits may be useful in applications in order to increase overall reliability of a system.

There are two parity bits for each word of Program Memory. The parity bits are computed on alternating bits of the program word. One computation is performed using even parity, the other using odd parity. As a program executes, the parity is verified. The even parity bit is XOR'd with the even bits in the program memory word. The odd parity bit is negated and XOR'd with the odd bits in the program memory word. When an error is detected, a reset is generated and the $\overline{\text{PER}}$ flag bit 2 in the PCON register is cleared (logic '0'). This indication can allow software to act on a failure. However, there is no indication of the program memory location of the failure in Program Memory. This flag can only be set (logic '1') by software.

The parity array is user selectable during programming. Bit 7 of the configuration word located at address 2007h can be programmed (read as '0') to disable parity. If left unprogrammed (read as '1'), parity is enabled.

TABLE 8-5: TIME-OUT IN VARIOUS SITUATIONS, PIC16C71

Oscillator Configuration	Power-up		Wake-up from SLEEP
	PWRTE = 1	PWRTE = 0	
XT, HS, LP	72 ms + 1024TOSC	1024TOSC	1024 TOSC
RC	72 ms	—	—

TABLE 8-6: TIME-OUT IN VARIOUS SITUATIONS, PIC16C710/711/715

Oscillator Configuration	Power-up		Brown-out	Wake-up from SLEEP
	$\overline{\text{PWRTE}}$ = 0	$\overline{\text{PWRTE}}$ = 1		
XT, HS, LP	72 ms + 1024TOSC	1024TOSC	72 ms + 1024TOSC	1024TOSC
RC	72 ms	—	72 ms	—

© 1997 Microchip Technology Inc.

TABLE 8-7: STATUS BITS AND THEIR SIGNIFICANCE, PIC16C71

$\overline{TO}$	$\overline{PD}$	
1	1	Power-on Reset
0	x	Illegal, $\overline{TO}$ is set on $\overline{POR}$
x	0	Illegal, $\overline{PD}$ is set on $\overline{POR}$
0	1	WDT Reset
0	0	WDT Wake-up
u	u	$\overline{MCLR}$ Reset during normal operation
1	0	$\overline{MCLR}$ Reset during SLEEP or interrupt wake-up from SLEEP

TABLE 8-8: STATUS BITS AND THEIR SIGNIFICANCE, PIC16C710/711

$\overline{POR}$	$\overline{BOR}$	$\overline{TO}$	$\overline{PD}$	
0	x	1	1	Power-on Reset
0	x	0	x	Illegal, $\overline{TO}$ is set on $\overline{POR}$
0	x	x	0	Illegal, $\overline{PD}$ is set on $\overline{POR}$
1	0	x	x	Brown-out Reset
1	1	0	1	WDT Reset
1	1	0	0	WDT Wake-up
1	1	u	u	$\overline{MCLR}$ Reset during normal operation
1	1	1	0	$\overline{MCLR}$ Reset during SLEEP or interrupt wake-up from SLEEP

TABLE 8-9: STATUS BITS AND THEIR SIGNIFICANCE, PIC16C715

$\overline{PER}$	$\overline{POR}$	$\overline{BOR}$	$\overline{TO}$	$\overline{PD}$	
1	0	x	1	1	Power-on Reset
x	0	x	0	x	Illegal, $\overline{TO}$ is set on $\overline{POR}$
x	0	x	x	0	Illegal, $\overline{PD}$ is set on $\overline{POR}$
1	1	0	x	x	Brown-out Reset
1	1	1	0	1	WDT Reset
1	1	1	0	0	WDT Wake-up
1	1	1	u	u	$\overline{MCLR}$ Reset during normal operation
1	1	1	1	0	$\overline{MCLR}$ Reset during SLEEP or interrupt wake-up from SLEEP
0	1	1	1	1	Parity Error Reset
0	0	x	x	x	Illegal, $\overline{PER}$ is set on POR
0	x	0	x	x	Illegal, $\overline{PER}$ is set on BOR

© 1997 Microchip Technology Inc.

TABLE 8-10: RESET CONDITION FOR SPECIAL REGISTERS, PIC16C710/71/711

Condition	Program Counter	STATUS Register	PCON Register PIC16C710/711
Power-on Reset	000h	0001 1xxx	---- --0x
$\overline{\text{MCLR}}$ Reset during normal operation	000h	000u uuuu	---- --uu
$\overline{\text{MCLR}}$ Reset during SLEEP	000h	0001 0uuu	---- --uu
WDT Reset	000h	0000 1uuu	---- --uu
WDT Wake-up	PC + 1	uuu0 0uuu	---- --uu
Brown-out Reset (PIC16C710/711)	000h	0001 1uuu	---- --u0
Interrupt wake-up from SLEEP	PC + 1(1)	uuu1 0uuu	---- --uu

Legend: u = unchanged, x = unknown, - = unimplemented bit read as '0'.
Note 1: When the wake-up is due to an interrupt and the GIE bit is set, the PC is loaded with the interrupt vector (0004h).

TABLE 8-11: RESET CONDITION FOR SPECIAL REGISTERS, PIC16C715

Condition	Program Counter	STATUS Register	PCON Register
Power-on Reset	000h	0001 1xxx	u--- -10x
$\overline{\text{MCLR}}$ Reset during normal operation	000h	000u uuuu	u--- -uuu
$\overline{\text{MCLR}}$ Reset during SLEEP	000h	0001 0uuu	u--- -uuu
WDT Reset	000h	0000 1uuu	u--- -uuu
WDT Wake-up	PC + 1	uuu0 0uuu	u--- -uuu
Brown-out Reset	000h	0001 1uuu	u--- -uu0
Parity Error Reset	000h	uuu1 0uuu	u--- -0uu
Interrupt wake-up from SLEEP	PC + 1(1)	uuu1 0uuu	u--- -uuu

Legend: u = unchanged, x = unknown, - = unimplemented bit read as '0'.
Note 1: When the wake-up is due to an interrupt and the GIE bit is set, the PC is loaded with the interrupt vector (0004h).

© 1997 Microchip Technology Inc.

TABLE 8-12: INITIALIZATION CONDITIONS FOR ALL REGISTERS, PIC16C710/71/711

Register	Power-on Reset, Brown-out Reset(5)	$\overline{\text{MCLR}}$ Resets WDT Reset	Wake-up via WDT or Interrupt
W	xxxx xxxx	uuuu uuuu	uuuu uuuu
INDF	N/A	N/A	N/A
TMR0	xxxx xxxx	uuuu uuuu	uuuu uuuu
PCL	0000h	0000h	PC + 1(2)
STATUS	0001 1xxx	000q quuu(3)	uuuq quuu(3)
FSR	xxxx xxxx	uuuu uuuu	uuuu uuuu
PORTA	---x 0000	---u 0000	---u uuuu
PORTB	xxxx xxxx	uuuu uuuu	uuuu uuuu
PCLATH	---0 0000	---0 0000	---u uuuu
INTCON	0000 000x	0000 000u	uuuu uuuu(1)
ADRES	xxxx xxxx	uuuu uuuu	uuuu uuuu
ADCON0	00-0 0000	00-0 0000	uu-u uuuu
OPTION	1111 1111	1111 1111	uuuu uuuu
TRISA	---1 1111	---1 1111	---u uuuu
TRISB	1111 1111	1111 1111	uuuu uuuu
PCON(4)	---- --0u	---- --uu	---- --uu
ADCON1	---- --00	---- --00	---- --uu

Legend: u = unchanged, x = unknown, - = unimplemented bit, read as '0', q = value depends on condition

Note 1: One or more bits in INTCON will be affected (to cause wake-up).

2: When the wake-up is due to an interrupt and the GIE bit is set, the PC is loaded with the interrupt vector (0004h).

3: See Table 8-10 for reset value for specific condition.

4: The PCON register is not implemented on the PIC16C71.

5: Brown-out reset is not implemented on the PIC16C71.

TABLE 8-13: INITIALIZATION CONDITIONS FOR ALL REGISTERS, PIC16C715

Register	Power-on Reset, Brown-out Reset Parity Error Reset	$\overline{\text{MCLR}}$ Resets WDT Reset	Wake-up via WDT or Interrupt
W	xxxx xxxx	uuuu uuuu	uuuu uuuu
INDF	N/A	N/A	N/A
TMR0	xxxx xxxx	uuuu uuuu	uuuu uuuu
PCL	0000 0000	0000 0000	PC + 1(2)
STATUS	0001 1xxx	000q quuu(3)	uuuq quuu(3)
FSR	xxxx xxxx	uuuu uuuu	uuuu uuuu
PORTA	---x 0000	---u 0000	---u uuuu
PORTB	xxxx xxxx	uuuu uuuu	uuuu uuuu
PCLATH	---0 0000	---0 0000	---u uuuu
INTCON	0000 000x	0000 000u	uuuu uuuu(1)
PIR1	-0-- ----	-0-- ----	-u-- ----(1)
ADCON0	0000 00-0	0000 00-0	uuuu uu-u
OPTION	1111 1111	1111 1111	uuuu uuuu
TRISA	---1 1111	---1 1111	---u uuuu
TRISB	1111 1111	1111 1111	uuuu uuuu
PIE1	-0-- ----	-0-- ----	-u-- ----
PCON	---- -qqq	---- -1uu	---- -1uu
ADCON1	---- --00	---- --00	---- --uu

Legend: u = unchanged, x = unknown, - = unimplemented bit, read as '0', q = value depends on condition

Note 1: One or more bits in INTCON and PIR1 will be affected (to cause wake-up).

2: When the wake-up is due to an interrupt and the GIE bit is set, the PC is loaded with the interrupt vector (0004h).

3: See Table 8-11 for reset value for specific condition.

© 1997 Microchip Technology Inc.

FIGURE 8-11: TIME-OUT SEQUENCE ON POWER-UP ($\overline{MCLR}$ NOT TIED TO VDD): CASE 1

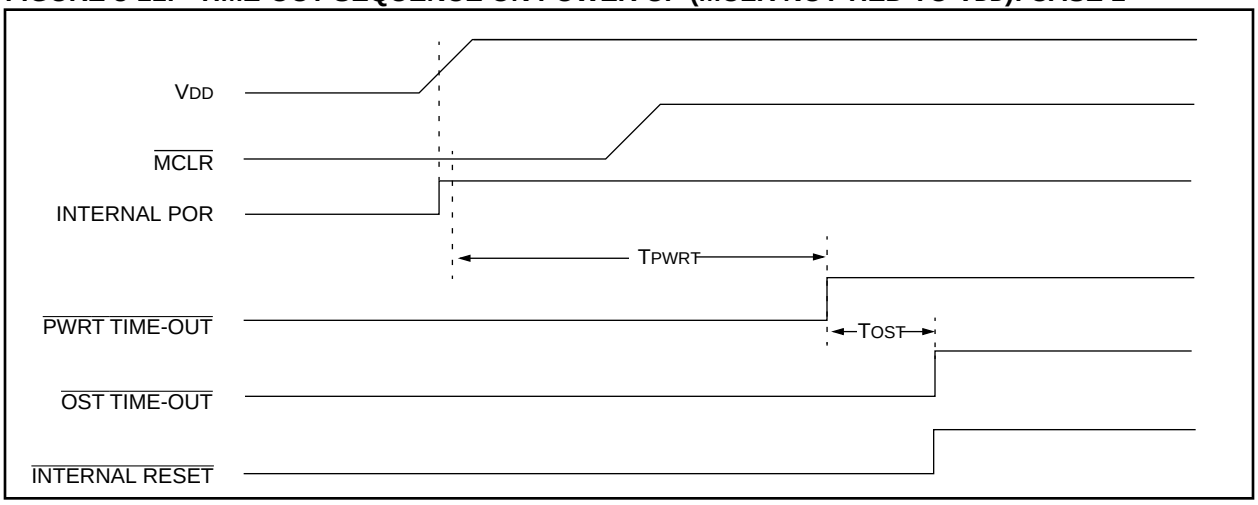

FIGURE 8-12: TIME-OUT SEQUENCE ON POWER-UP ($\overline{MCLR}$ NOT TIED TO VDD): CASE 2

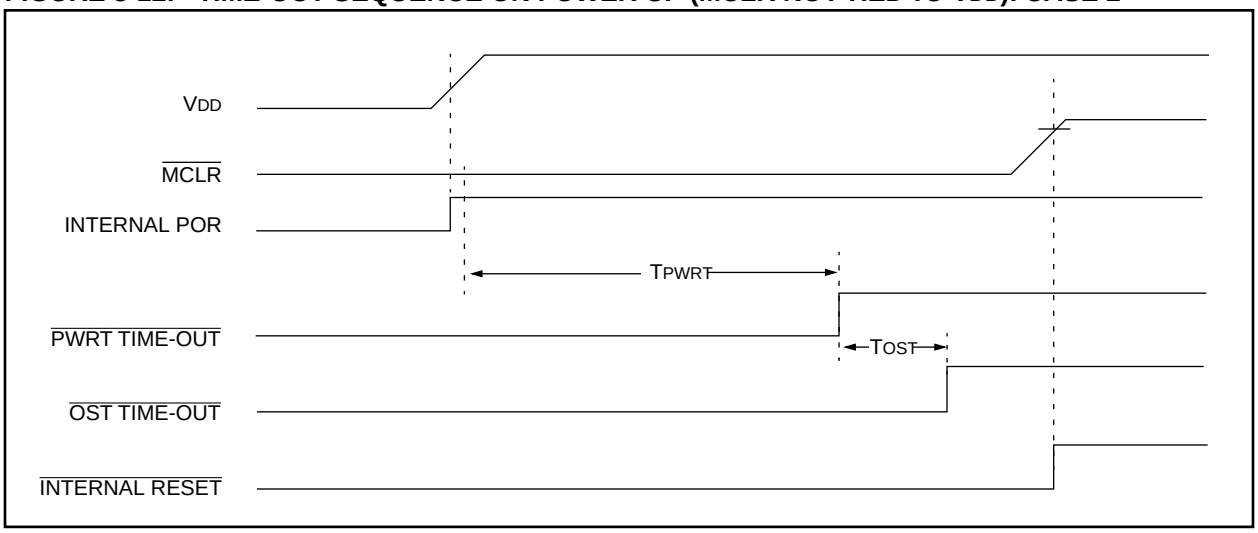

FIGURE 8-13: TIME-OUT SEQUENCE ON POWER-UP ($\overline{MCLR}$ TIED TO VDD)

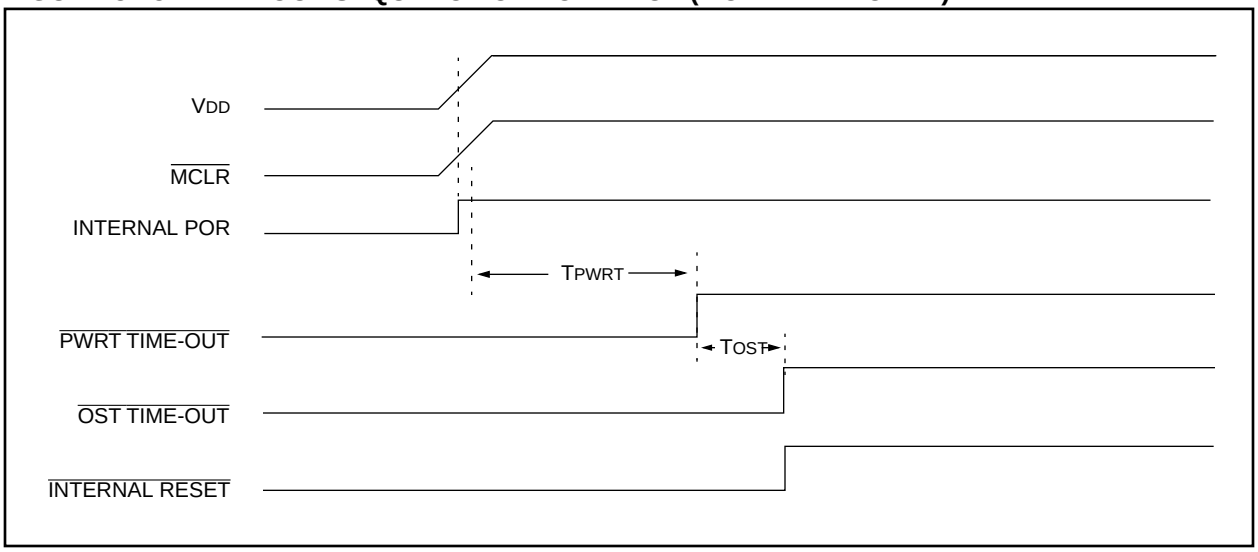

FIGURE 8-14: EXTERNAL POWER-ON RESET CIRCUIT (FOR SLOW VDD POWER-UP)

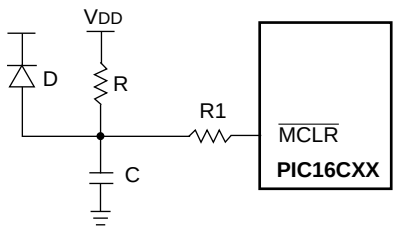

Note 1: External Power-on Reset circuit is required only if VDD power-up slope is too slow. The diode D helps discharge the capacitor quickly when VDD powers down.

2: R < 40 kΩ is recommended to make sure that voltage drop across R does not violate the device's electrical specification.

3: R1 = 100Ω to 1 kΩ will limit any current flowing into $\overline{\text{MCLR}}$ from external capacitor C in the event of $\overline{\text{MCLR}}$/VPP pin breakdown due to Electrostatic Discharge (ESD) or Electrical Overstress (EOS).

FIGURE 8-15: EXTERNAL BROWN-OUT PROTECTION CIRCUIT 1

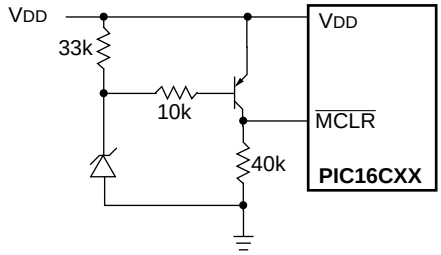

Note 1: This circuit will activate reset when VDD goes below (Vz + 0.7V) where Vz = Zener voltage.

2: Internal brown-out detection on the PIC16C710/711/715 should be disabled when using this circuit.

3: Resistors should be adjusted for the characteristics of the transistor.

FIGURE 8-16: EXTERNAL BROWN-OUT PROTECTION CIRCUIT 2

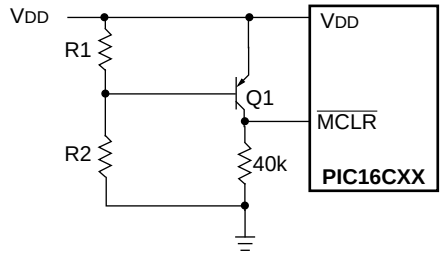

Note 1: This brown-out circuit is less expensive, albeit less accurate. Transistor Q1 turns off when VDD is below a certain level such that:

$$V_{DD} \cdot \frac{R1}{R1 + R2} = 0.7V$$

2: Internal brown-out detection on the PIC16C710/711/715 should be disabled when using this circuit.

3: Resistors should be adjusted for the characteristics of the transistor.

© 1997 Microchip Technology Inc.

8.5 Interrupts

Applicable Devices	710	71	711	715

The PIC16C71X family has 4 sources of interrupt.

Interrupt Sources
External interrupt RB0/INT
TMR0 overflow interrupt
PORTB change interrupts (pins RB7:RB4)
A/D Interrupt

The interrupt control register (INTCON) records individual interrupt requests in flag bits. It also has individual and global interrupt enable bits.

Note: Individual interrupt flag bits are set regardless of the status of their corresponding mask bit or the GIE bit.

A global interrupt enable bit, GIE (INTCON<7>) enables (if set) all un-masked interrupts or disables (if cleared) all interrupts. When bit GIE is enabled, and an interrupt's flag bit and mask bit are set, the interrupt will vector immediately. Individual interrupts can be disabled through their corresponding enable bits in various registers. Individual interrupt bits are set regardless of the status of the GIE bit. The GIE bit is cleared on reset.

The "return from interrupt" instruction, `RETFIE`, exits the interrupt routine as well as sets the GIE bit, which re-enables interrupts.

The RB0/INT pin interrupt, the RB port change interrupt and the TMR0 overflow interrupt flags are contained in the INTCON register.

The peripheral interrupt flags are contained in the special function registers PIR1 and PIR2. The corresponding interrupt enable bits are contained in special function registers PIE1 and PIE2, and the peripheral interrupt enable bit is contained in special function register INTCON.

When an interrupt is responded to, the GIE bit is cleared to disable any further interrupt, the return address is pushed onto the stack and the PC is loaded with 0004h. Once in the interrupt service routine the source(s) of the interrupt can be determined by polling the interrupt flag bits. The interrupt flag bit(s) must be cleared in software before re-enabling interrupts to avoid recursive interrupts.

For external interrupt events, such as the INT pin or PORTB change interrupt, the interrupt latency will be three or four instruction cycles. The exact latency depends when the interrupt event occurs (Figure 8-19). The latency is the same for one or two cycle instructions. Individual interrupt flag bits are set regardless of the status of their corresponding mask bit or the GIE bit.

Note: For the PIC16C71
If an interrupt occurs while the Global Interrupt Enable (GIE) bit is being cleared, the GIE bit may unintentionally be re-enabled by the user's Interrupt Service Routine (the `RETFIE` instruction). The events that would cause this to occur are:

1. An instruction clears the GIE bit while an interrupt is acknowledged.
2. The program branches to the Interrupt vector and executes the Interrupt Service Routine.
3. The Interrupt Service Routine completes with the execution of the `RETFIE` instruction. This causes the GIE bit to be set (enables interrupts), and the program returns to the instruction after the one which was meant to disable interrupts.

Perform the following to ensure that interrupts are globally disabled:

```
LOOP BCF   INTCON, GIE  ; Disable global
                        ;  interrupt bit
     BTFSC INTCON, GIE  ; Global interrupt
                        ;   disabled?
     GOTO  LOOP         ; NO, try again
        :               ;   Yes, continue
                        ;   with program
                        ;   flow
```

FIGURE 8-17: INTERRUPT LOGIC, PIC16C710, 71, 711

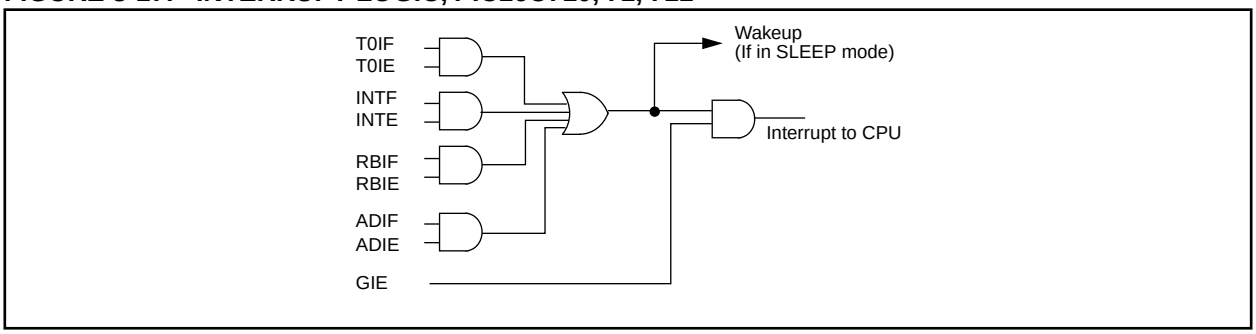

FIGURE 8-18: INTERRUPT LOGIC, PIC16C715

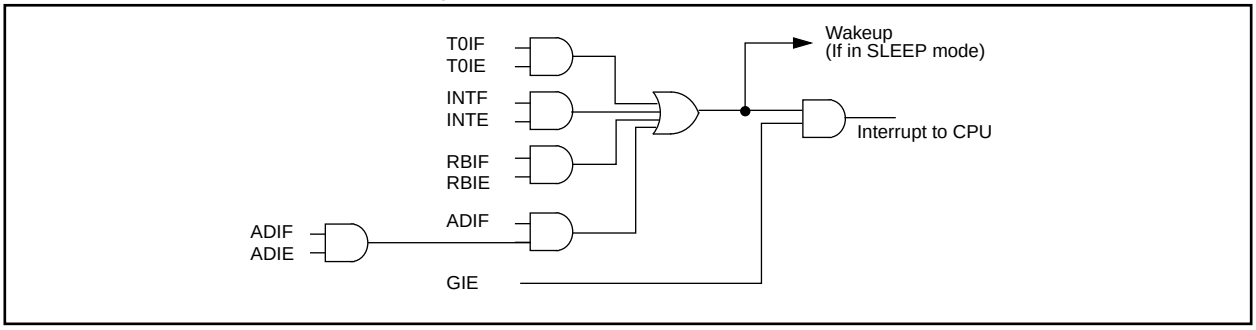

© 1997 Microchip Technology Inc.

8.5.1 INT INTERRUPT

External interrupt on RB0/INT pin is edge triggered: either rising if bit INTEDG (OPTION<6>) is set, or falling, if the INTEDG bit is clear. When a valid edge appears on the RB0/INT pin, flag bit INTF (INTCON<1>) is set. This interrupt can be disabled by clearing enable bit INTE (INTCON<4>). Flag bit INTF must be cleared in software in the interrupt service routine before re-enabling this interrupt. The INT interrupt can wake-up the processor from SLEEP, if bit INTE was set prior to going into SLEEP. The status of global interrupt enable bit GIE decides whether or not the processor branches to the interrupt vector following wake-up. See Section 8.8 for details on SLEEP mode.

8.5.2 TMR0 INTERRUPT

An overflow (FFh → 00h) in the TMR0 register will set flag bit T0IF (INTCON<2>). The interrupt can be enabled/disabled by setting/clearing enable bit T0IE (INTCON<5>). (Section 6.0)

8.5.3 PORTB INTCON CHANGE

An input change on PORTB<7:4> sets flag bit RBIF (INTCON<0>). The interrupt can be enabled/disabled by setting/clearing enable bit RBIE (INTCON<4>). (Section 5.2)

> **Note:** For the PIC16C71 if a change on the I/O pin should occur when the read operation is being executed (start of the Q2 cycle), then the RBIF interrupt flag may not get set.

FIGURE 8-19: INT PIN INTERRUPT TIMING

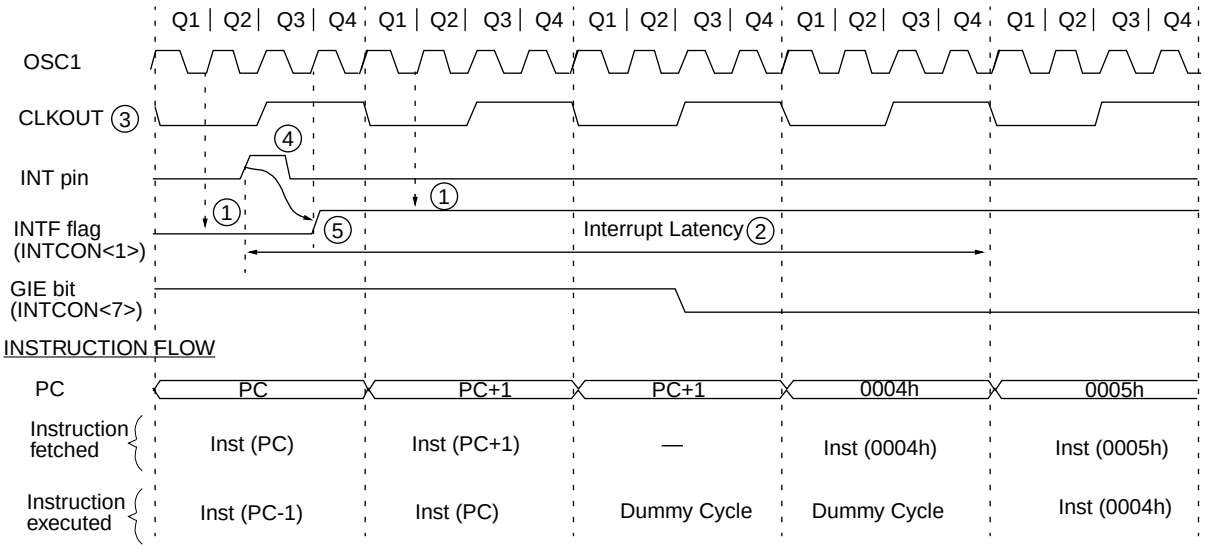

Note 1: INTF flag is sampled here (every Q1).
2: Interrupt latency = 3-4 Tcy where Tcy = instruction cycle time. Latency is the same whether Inst (PC) is a single cycle or a 2-cycle instruction.
3: CLKOUT is available only in RC oscillator mode.
4: For minimum width of INT pulse, refer to AC specs.
5: INTF is enabled to be set anytime during the Q4-Q1 cycles.

8.6 Context Saving During Interrupts

During an interrupt, only the return PC value is saved on the stack. Typically, users may wish to save key registers during an interrupt i.e., W register and STATUS register. This will have to be implemented in software.

Example 8-1 stores and restores the STATUS and W registers. The user register, STATUS_TEMP, must be defined in bank 0.

The example:

a) Stores the W register.
b) Stores the STATUS register in bank 0.
c) Executes the ISR code.
d) Restores the STATUS register (and bank select bit).
e) Restores the W register.

EXAMPLE 8-1: SAVING STATUS AND W REGISTERS IN RAM

```
MOVWF    W_TEMP          ;Copy W to TEMP register, could be bank one or zero
SWAPF    STATUS,W        ;Swap status to be saved into W
MOVWF    STATUS_TEMP     ;Save status to bank zero STATUS_TEMP register
:
:(ISR)
:
SWAPF    STATUS_TEMP,W   ;Swap STATUS_TEMP register into W
                         ;(sets bank to original state)
MOVWF    STATUS          ;Move W into STATUS register
SWAPF    W_TEMP,F        ;Swap W_TEMP
SWAPF    W_TEMP,W        ;Swap W_TEMP into W
```


© 1997 Microchip Technology Inc.

8.7 Watchdog Timer (WDT)

Applicable Devices	710	71	711	715

The Watchdog Timer is as a free running on-chip RC oscillator which does not require any external components. This RC oscillator is separate from the RC oscillator of the OSC1/CLKIN pin. That means that the WDT will run, even if the clock on the OSC1/CLKIN and OSC2/CLKOUT pins of the device has been stopped, for example, by execution of a SLEEP instruction. During normal operation, a WDT time-out generates a device RESET (Watchdog Timer Reset). If the device is in SLEEP mode, a WDT time-out causes the device to wake-up and continue with normal operation (Watchdog Timer Wake-up). The WDT can be permanently disabled by clearing configuration bit WDTE (Section 8.1).

8.7.1 WDT PERIOD

The WDT has a nominal time-out period of 18 ms, (with no prescaler). The time-out periods vary with temperature, VDD and process variations from part to part (see DC specs). If longer time-out periods are desired, a prescaler with a division ratio of up to 1:128 can be assigned to the WDT under software control by writing to the OPTION register. Thus, time-out periods up to 2.3 seconds can be realized.

The CLRWDT and SLEEP instructions clear the WDT and the postscaler, if assigned to the WDT, and prevent it from timing out and generating a device RESET condition.

The $\overline{TO}$ bit in the STATUS register will be cleared upon a Watchdog Timer time-out.

8.7.2 WDT PROGRAMMING CONSIDERATIONS

It should also be taken into account that under worst case conditions (VDD = Min., Temperature = Max., and max. WDT prescaler) it may take several seconds before a WDT time-out occurs.

Note:	When a CLRWDT instruction is executed and the prescaler is assigned to the WDT, the prescaler count will be cleared, but the prescaler assignment is not changed.

FIGURE 8-20: WATCHDOG TIMER BLOCK DIAGRAM

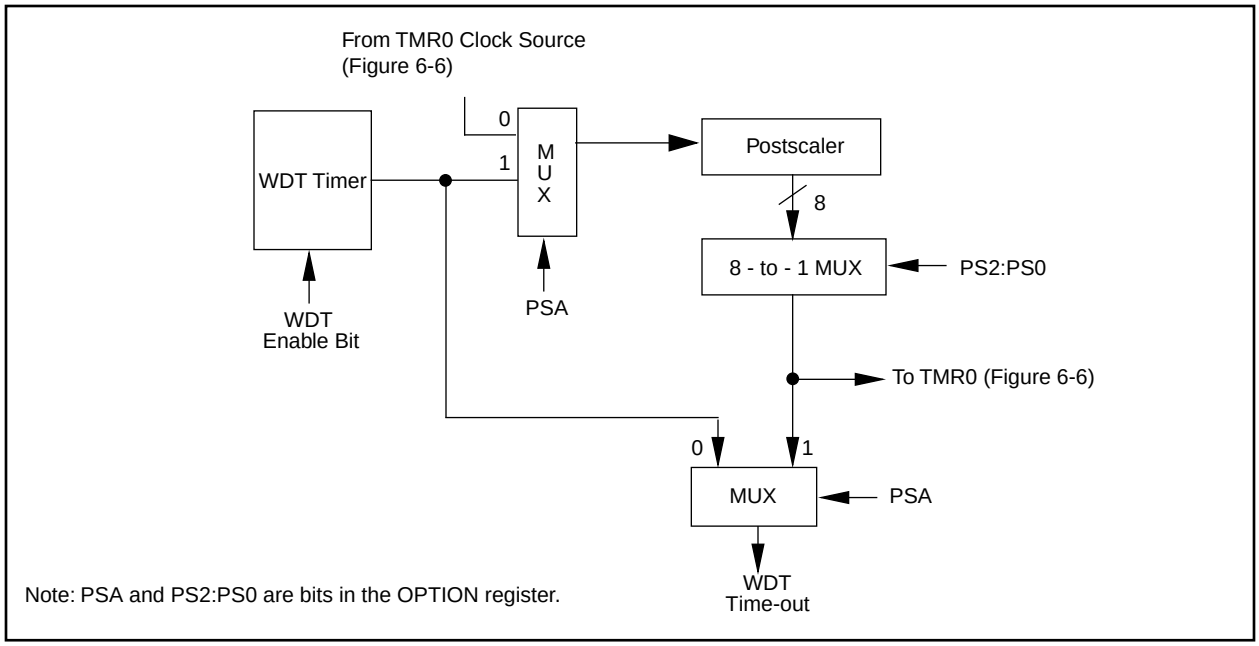

FIGURE 8-21: SUMMARY OF WATCHDOG TIMER REGISTERS

Address	Name	Bit 7	Bit 6	Bit 5	Bit 4	Bit 3	Bit 2	Bit 1	Bit 0
2007h	Config. bits	(1)	BODEN(1)	CP1	CP0	PWRTE(1)	WDTE	FOSC1	FOSC0
81h,181h	OPTION	$\overline{RBPU}$	INTEDG	T0CS	T0SE	PSA	PS2	PS1	PS0

Legend: Shaded cells are not used by the Watchdog Timer.
Note 1: See Figure 8-1, Figure 8-2 and Figure 8-3 for operation of these bits.

8.8 Power-down Mode (SLEEP)

Power-down mode is entered by executing a SLEEP instruction.

If enabled, the Watchdog Timer will be cleared but keeps running, the $\overline{PD}$ bit (STATUS<3>) is cleared, the $\overline{TO}$ (STATUS<4>) bit is set, and the oscillator driver is turned off. The I/O ports maintain the status they had, before the SLEEP instruction was executed (driving high, low, or hi-impedance).

For lowest current consumption in this mode, place all I/O pins at either V_{DD}, or V_{SS}, ensure no external circuitry is drawing current from the I/O pin, power-down the A/D, disable external clocks. Pull all I/O pins, that are hi-impedance inputs, high or low externally to avoid switching currents caused by floating inputs. The T0CKI input should also be at V_{DD} or V_{SS} for lowest current consumption. The contribution from on-chip pull-ups on PORTB should be considered.

The $\overline{MCLR}$ pin must be at a logic high level (V_{IHMC}).

8.8.1 WAKE-UP FROM SLEEP

The device can wake up from SLEEP through one of the following events:

1. External reset input on $\overline{MCLR}$ pin.
2. Watchdog Timer Wake-up (if WDT was enabled).
3. Interrupt from INT pin, RB port change, or some Peripheral Interrupts.

External $\overline{MCLR}$ Reset will cause a device reset. All other events are considered a continuation of program execution and cause a "wake-up". The $\overline{TO}$ and $\overline{PD}$ bits in the STATUS register can be used to determine the cause of device reset. The $\overline{PD}$ bit, which is set on power-up, is cleared when SLEEP is invoked. The $\overline{TO}$ bit is cleared if a WDT time-out occurred (and caused wake-up).

The following peripheral interrupts can wake the device from SLEEP:

1. TMR1 interrupt. Timer1 must be operating as an asynchronous counter.
2. A/D conversion (when A/D clock source is RC).

Other peripherals cannot generate interrupts since during SLEEP, no on-chip Q clocks are present.

When the SLEEP instruction is being executed, the next instruction (PC + 1) is pre-fetched. For the device to wake-up through an interrupt event, the corresponding interrupt enable bit must be set (enabled). Wake-up is regardless of the state of the GIE bit. If the GIE bit is clear (disabled), the device continues execution at the instruction after the SLEEP instruction. If the GIE bit is set (enabled), the device executes the instruction after the SLEEP instruction and then branches to the interrupt address (0004h). In cases where the execution of the instruction following SLEEP is not desirable, the user should have a NOP after the SLEEP instruction.

8.8.2 WAKE-UP USING INTERRUPTS

When global interrupts are disabled (GIE cleared) and any interrupt source has both its interrupt enable bit and interrupt flag bit set, one of the following will occur:

- If the interrupt occurs **before** the the execution of a SLEEP instruction, the SLEEP instruction will complete as a NOP. Therefore, the WDT and WDT postscaler will not be cleared, the $\overline{TO}$ bit will not be set and $\overline{PD}$ bits will not be cleared.
- If the interrupt occurs **during or after** the execution of a SLEEP instruction, the device will immediately wake up from sleep . The SLEEP instruction will be completely executed before the wake-up. Therefore, the WDT and WDT postscaler will be cleared, the $\overline{TO}$ bit will be set and the $\overline{PD}$ bit will be cleared.

Even if the flag bits were checked before executing a SLEEP instruction, it may be possible for flag bits to become set before the SLEEP instruction completes. To determine whether a SLEEP instruction executed, test the $\overline{PD}$ bit. If the $\overline{PD}$ bit is set, the SLEEP instruction was executed as a NOP.

To ensure that the WDT is cleared, a CLRWDT instruction should be executed before a SLEEP instruction.

© 1997 Microchip Technology Inc.

FIGURE 8-22: WAKE-UP FROM SLEEP THROUGH INTERRUPT

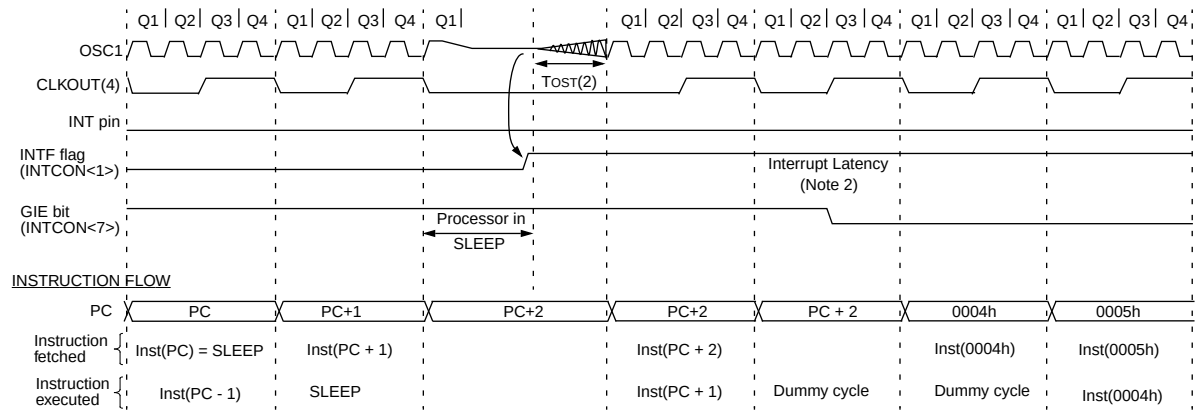

Note 1: XT, HS or LP oscillator mode assumed.
2: TOST = 1024TOSC (drawing not to scale) This delay will not be there for RC osc mode.
3: GIE = '1' assumed. In this case after wake- up, the processor jumps to the interrupt routine. If GIE = '0', execution will continue in-line.
4: CLKOUT is not available in these osc modes, but shown here for timing reference.

8.9 Program Verification/Code Protection

If the code protection bit(s) have not been programmed, the on-chip program memory can be read out for verification purposes.

Note: Microchip does not recommend code protecting windowed devices.

8.10 ID Locations

Four memory locations (2000h - 2003h) are designated as ID locations where the user can store checksum or other code-identification numbers. These locations are not accessible during normal execution but are readable and writable during program/verify. It is recommended that only the 4 least significant bits of the ID location are used.

8.11 In-Circuit Serial Programming

PIC16CXX microcontrollers can be serially programmed while in the end application circuit. This is simply done with two lines for clock and data, and three other lines for power, ground, and the programming voltage. This allows customers to manufacture boards with unprogrammed devices, and then program the microcontroller just before shipping the product. This also allows the most recent firmware or a custom firmware to be programmed.

The device is placed into a program/verify mode by holding the RB6 and RB7 pins low while raising the $\overline{MCLR}$ (V_{PP}) pin from V_{IL} to V_{IHH} (see programming specification). RB6 becomes the programming clock and RB7 becomes the programming data. Both RB6 and RB7 are Schmitt Trigger inputs in this mode.

After reset, to place the device into programming/verify mode, the program counter (PC) is at location 00h. A 6-bit command is then supplied to the device. Depending on the command, 14-bits of program data are then supplied to or from the device, depending if the command was a load or a read. For complete details of serial programming, please refer to the PIC16C6X/7X Programming Specifications (Literature #DS30228).

FIGURE 8-23: TYPICAL IN-CIRCUIT SERIAL PROGRAMMING CONNECTION

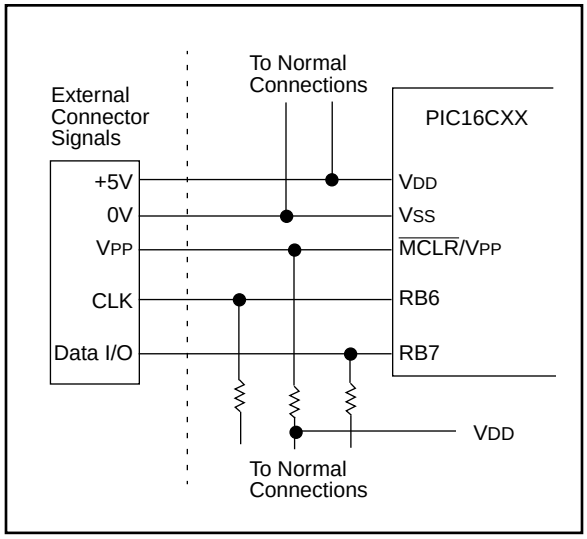

NOTES:

© 1997 Microchip Technology Inc.

9.0 INSTRUCTION SET SUMMARY

Each PIC16CXX instruction is a 14-bit word divided into an OPCODE which specifies the instruction type and one or more operands which further specify the operation of the instruction. The PIC16CXX instruction set summary in Table 9-2 lists **byte-oriented**, **bit-oriented**, and **literal and control** operations. Table 9-1 shows the opcode field descriptions.

For **byte-oriented** instructions, 'f' represents a file register designator and 'd' represents a destination designator. The file register designator specifies which file register is to be used by the instruction.

The destination designator specifies where the result of the operation is to be placed. If 'd' is zero, the result is placed in the W register. If 'd' is one, the result is placed in the file register specified in the instruction.

For **bit-oriented** instructions, 'b' represents a bit field designator which selects the number of the bit affected by the operation, while 'f' represents the number of the file in which the bit is located.

For **literal and control** operations, 'k' represents an eight or eleven bit constant or literal value.

TABLE 9-1: OPCODE FIELD DESCRIPTIONS

Field	Description
f	Register file address (0x00 to 0x7F)
W	Working register (accumulator)
b	Bit address within an 8-bit file register
k	Literal field, constant data or label
x	Don't care location (= 0 or 1) The assembler will generate code with x = 0. It is the recommended form of use for compatibility with all Microchip software tools.
d	Destination select; d = 0: store result in W, d = 1: store result in file register f. Default is d = 1
label	Label name
TOS	Top of Stack
PC	Program Counter
PCLATH	Program Counter High Latch
GIE	Global Interrupt Enable bit
WDT	Watchdog Timer/Counter
$\overline{TO}$	Time-out bit
$\overline{PD}$	Power-down bit
dest	Destination either the W register or the specified register file location
[ ]	Options
( )	Contents
→	Assigned to
< >	Register bit field
∈	In the set of
italics	User defined term (font is courier)

The instruction set is highly orthogonal and is grouped into three basic categories:

- **Byte-oriented** operations
- **Bit-oriented** operations
- **Literal and control** operations

All instructions are executed within one single instruction cycle, unless a conditional test is true or the program counter is changed as a result of an instruction. In this case, the execution takes two instruction cycles with the second cycle executed as a NOP. One instruction cycle consists of four oscillator periods. Thus, for an oscillator frequency of 4 MHz, the normal instruction execution time is 1 µs. If a conditional test is true or the program counter is changed as a result of an instruction, the instruction execution time is 2 µs.

Table 9-2 lists the instructions recognized by the MPASM assembler.

Figure 9-1 shows the general formats that the instructions can have.

> **Note:** To maintain upward compatibility with future PIC16CXX products, do not use the OPTION and TRIS instructions.

All examples use the following format to represent a hexadecimal number:

0xhh

where h signifies a hexadecimal digit.

FIGURE 9-1: GENERAL FORMAT FOR INSTRUCTIONS

Byte-oriented file register operations

13 … 8	7	6 … 0
OPCODE	d	f (FILE #)

d = 0 for destination W
d = 1 for destination f
f = 7-bit file register address

Bit-oriented file register operations

13 … 10	9 … 7	6 … 0
OPCODE	b (BIT #)	f (FILE #)

b = 3-bit bit address
f = 7-bit file register address

Literal and control operations

General

13 … 8	7 … 0
OPCODE	k (literal)

k = 8-bit immediate value

CALL and GOTO instructions only

13 … 11	10 … 0
OPCODE	k (literal)

k = 11-bit immediate value

TABLE 9-2: PIC16CXX INSTRUCTION SET

Mnemonic, Operands		Description	Cycles	14-Bit Opcode MSb			LSb	Status Affected	Notes
BYTE-ORIENTED FILE REGISTER OPERATIONS									
ADDWF	**f, d**	Add W and f	1	00	0111	dfff	ffff	C,DC,Z	1,2
ANDWF	**f, d**	AND W with f	1	00	0101	dfff	ffff	Z	1,2
CLRF	**f**	Clear f	1	00	0001	lfff	ffff	Z	2
CLRW	**-**	Clear W	1	00	0001	0xxx	xxxx	Z	
COMF	**f, d**	Complement f	1	00	1001	dfff	ffff	Z	1,2
DECF	**f, d**	Decrement f	1	00	0011	dfff	ffff	Z	1,2
DECFSZ	**f, d**	Decrement f, Skip if 0	1(2)	00	1011	dfff	ffff		1,2,3
INCF	**f, d**	Increment f	1	00	1010	dfff	ffff	Z	1,2
INCFSZ	**f, d**	Increment f, Skip if 0	1(2)	00	1111	dfff	ffff		1,2,3
IORWF	**f, d**	Inclusive OR W with f	1	00	0100	dfff	ffff	Z	1,2
MOVF	**f, d**	Move f	1	00	1000	dfff	ffff	Z	1,2
MOVWF	**f**	Move W to f	1	00	0000	lfff	ffff		
NOP	**-**	No Operation	1	00	0000	0xx0	0000		
RLF	**f, d**	Rotate Left f through Carry	1	00	1101	dfff	ffff	C	1,2
RRF	**f, d**	Rotate Right f through Carry	1	00	1100	dfff	ffff	C	1,2
SUBWF	**f, d**	Subtract W from f	1	00	0010	dfff	ffff	C,DC,Z	1,2
SWAPF	**f, d**	Swap nibbles in f	1	00	1110	dfff	ffff		1,2
XORWF	**f, d**	Exclusive OR W with f	1	00	0110	dfff	ffff	Z	1,2
BIT-ORIENTED FILE REGISTER OPERATIONS									
BCF	**f, b**	Bit Clear f	1	01	00bb	bfff	ffff		1,2
BSF	**f, b**	Bit Set f	1	01	01bb	bfff	ffff		1,2
BTFSC	**f, b**	Bit Test f, Skip if Clear	1 (2)	01	10bb	bfff	ffff		3
BTFSS	**f, b**	Bit Test f, Skip if Set	1 (2)	01	11bb	bfff	ffff		3
LITERAL AND CONTROL OPERATIONS									
ADDLW	**k**	Add literal and W	1	11	111x	kkkk	kkkk	C,DC,Z	
ANDLW	**k**	AND literal with W	1	11	1001	kkkk	kkkk	Z	
CALL	**k**	Call subroutine	2	10	0kkk	kkkk	kkkk		
CLRWDT	**-**	Clear Watchdog Timer	1	00	0000	0110	0100	$\overline{TO}$,$\overline{PD}$	
GOTO	**k**	Go to address	2	10	1kkk	kkkk	kkkk		
IORLW	**k**	Inclusive OR literal with W	1	11	1000	kkkk	kkkk	Z	
MOVLW	**k**	Move literal to W	1	11	00xx	kkkk	kkkk		
RETFIE	**-**	Return from interrupt	2	00	0000	0000	1001		
RETLW	**k**	Return with literal in W	2	11	01xx	kkkk	kkkk		
RETURN	**-**	Return from Subroutine	2	00	0000	0000	1000		
SLEEP	**-**	Go into standby mode	1	00	0000	0110	0011	$\overline{TO}$,$\overline{PD}$	
SUBLW	**k**	Subtract W from literal	1	11	110x	kkkk	kkkk	C,DC,Z	
XORLW	**k**	Exclusive OR literal with W	1	11	1010	kkkk	kkkk	Z	

Note 1: When an I/O register is modified as a function of itself (e.g., `MOVF PORTB, 1`), the value used will be that value present on the pins themselves. For example, if the data latch is '1' for a pin configured as input and is driven low by an external device, the data will be written back with a '0'.

2: If this instruction is executed on the TMR0 register (and, where applicable, d = 1), the prescaler will be cleared if assigned to the Timer0 Module.

3: If Program Counter (PC) is modified or a conditional test is true, the instruction requires two cycles. The second cycle is executed as a NOP.

© 1997 Microchip Technology Inc.

9.1 Instruction Descriptions

ADDLW — Add Literal and W

Syntax:	[*label*] ADDLW k
Operands:	$0 \le k \le 255$
Operation:	(W) + k → (W)
Status Affected:	C, DC, Z
Encoding:	11 | 111x | kkkk | kkkk
Description:	The contents of the W register are added to the eight bit literal 'k' and the result is placed in the W register.
Words:	1
Cycles:	1

Q Cycle Activity:

Q1	Q2	Q3	Q4
Decode	Read literal 'k'	Process data	Write to W

Example:

```
ADDLW   0x15
```

Before Instruction
W = 0x10
After Instruction
W = 0x25

ANDLW — AND Literal with W

Syntax:	[*label*] ANDLW k
Operands:	$0 \le k \le 255$
Operation:	(W) .AND. (k) → (W)
Status Affected:	Z
Encoding:	11 | 1001 | kkkk | kkkk
Description:	The contents of W register are AND'ed with the eight bit literal 'k'. The result is placed in the W register.
Words:	1
Cycles:	1

Q Cycle Activity:

Q1	Q2	Q3	Q4
Decode	Read literal "k"	Process data	Write to W

Example

```
ANDLW   0x5F
```

Before Instruction
W = 0xA3
After Instruction
W = 0x03

ADDWF — Add W and f

Syntax:	[*label*] ADDWF f,d
Operands:	$0 \le f \le 127$ $d \in [0,1]$
Operation:	(W) + (f) → (dest)
Status Affected:	C, DC, Z
Encoding:	00 | 0111 | dfff | ffff
Description:	Add the contents of the W register with register 'f'. If 'd' is 0 the result is stored in the W register. If 'd' is 1 the result is stored back in register 'f'.
Words:	1
Cycles:	1

Q Cycle Activity:

Q1	Q2	Q3	Q4
Decode	Read register 'f'	Process data	Write to Dest

Example

```
ADDWF   FSR, 0
```

Before Instruction
W = 0x17
FSR = 0xC2
After Instruction
W = 0xD9
FSR = 0xC2

ANDWF — AND W with f

Syntax:	[*label*] ANDWF f,d
Operands:	$0 \le f \le 127$ $d \in [0,1]$
Operation:	(W) .AND. (f) → (dest)
Status Affected:	Z
Encoding:	00 | 0101 | dfff | ffff
Description:	AND the W register with register 'f'. If 'd' is 0 the result is stored in the W register. If 'd' is 1 the result is stored back in register 'f'.
Words:	1
Cycles:	1

Q Cycle Activity:

Q1	Q2	Q3	Q4
Decode	Read register 'f'	Process data	Write to Dest

Example

```
ANDWF   FSR, 1
```

Before Instruction
W = 0x17
FSR = 0xC2
After Instruction
W = 0x17
FSR = 0x02

© 1997 Microchip Technology Inc.

BCF — Bit Clear f

Syntax:	[*label*] BCF f,b
Operands:	$0 \le f \le 127$ $0 \le b \le 7$
Operation:	$0 \rightarrow$ (f<b>)
Status Affected:	None
Encoding:	01 | 00bb | bfff | ffff
Description:	Bit 'b' in register 'f' is cleared.
Words:	1
Cycles:	1

Q Cycle Activity:

Q1	Q2	Q3	Q4
Decode	Read register 'f'	Process data	Write register 'f'

Example

```
BCF     FLAG_REG, 7
```

Before Instruction
FLAG_REG = 0xC7
After Instruction
FLAG_REG = 0x47

BSF — Bit Set f

Syntax:	[*label*] BSF f,b
Operands:	$0 \le f \le 127$ $0 \le b \le 7$
Operation:	$1 \rightarrow$ (f<b>)
Status Affected:	None
Encoding:	01 | 01bb | bfff | ffff
Description:	Bit 'b' in register 'f' is set.
Words:	1
Cycles:	1

Q Cycle Activity:

Q1	Q2	Q3	Q4
Decode	Read register 'f'	Process data	Write register 'f'

Example

```
BSF     FLAG_REG,   7
```

Before Instruction
FLAG_REG = 0x0A
After Instruction
FLAG_REG = 0x8A

BTFSC — Bit Test, Skip if Clear

Syntax:	[*label*] BTFSC f,b
Operands:	$0 \le f \le 127$ $0 \le b \le 7$
Operation:	skip if (f<b>) = 0
Status Affected:	None
Encoding:	01 | 10bb | bfff | ffff
Description:	If bit 'b' in register 'f' is '1' then the next instruction is executed. If bit 'b', in register 'f', is '0' then the next instruction is discarded, and a NOP is executed instead, making this a 2TCY instruction.
Words:	1
Cycles:	1(2)

Q Cycle Activity:

Q1	Q2	Q3	Q4
Decode	Read register 'f'	Process data	NOP

If Skip: (2nd Cycle)

Q1	Q2	Q3	Q4
NOP	NOP	NOP	NOP

Example

```
HERE    BTFSC   FLAG,1
FALSE   GOTO    PROCESS_CODE
TRUE    •
        •
        •
```

Before Instruction
PC = address HERE
After Instruction
if FLAG<1> = 0,
PC = address TRUE
if FLAG<1>=1,
PC = address FALSE

© 1997 Microchip Technology Inc.

BTFSS — Bit Test f, Skip if Set

Syntax:	[*label*] BTFSS f,b
Operands:	$0 \le f \le 127$ $0 \le b < 7$
Operation:	skip if (f<b>) = 1
Status Affected:	None
Encoding:	01 | 11bb | bfff | ffff
Description:	If bit 'b' in register 'f' is '0' then the next instruction is executed. If bit 'b' is '1', then the next instruction is discarded and a NOP is executed instead, making this a 2TCY instruction.
Words:	1
Cycles:	1(2)

Q Cycle Activity:

Q1	Q2	Q3	Q4
Decode	Read register 'f'	Process data	NOP

If Skip: (2nd Cycle)

Q1	Q2	Q3	Q4
NOP	NOP	NOP	NOP

Example

```
HERE    BTFSC   FLAG,1
FALSE   GOTO    PROCESS_CODE
TRUE    •
        •
        •
```

Before Instruction
PC = address HERE
After Instruction
if FLAG<1> = 0,
PC = address FALSE
if FLAG<1> = 1,
PC = address TRUE

CALL — Call Subroutine

Syntax:	[*label*] CALL k
Operands:	$0 \le k \le 2047$
Operation:	(PC)+ 1→ TOS, k → PC<10:0>, (PCLATH<4:3>) → PC<12:11>
Status Affected:	None
Encoding:	10 | 0kkk | kkkk | kkkk
Description:	Call Subroutine. First, return address (PC+1) is pushed onto the stack. The eleven bit immediate address is loaded into PC bits <10:0>. The upper bits of the PC are loaded from PCLATH. CALL is a two cycle instruction.
Words:	1
Cycles:	2

Q Cycle Activity:

	Q1	Q2	Q3	Q4
1st Cycle	Decode	Read literal 'k', Push PC to Stack	Process data	Write to PC
2nd Cycle	NOP	NOP	NOP	NOP

Example

```
HERE    CALL    THERE
```

Before Instruction
PC = Address HERE
After Instruction
PC = Address THERE
TOS = Address HERE+1

CLRF **Clear f**

Syntax: [*label*] CLRF f

Operands: $0 \le f \le 127$

Operation: 00h → (f)
1 → Z

Status Affected: Z

Encoding:

00	0001	1fff	ffff

Description: The contents of register 'f' are cleared and the Z bit is set.

Words: 1

Cycles: 1

Q Cycle Activity:

Q1	Q2	Q3	Q4
Decode	Read register 'f'	Process data	Write register 'f'

Example `CLRF FLAG_REG`

Before Instruction
FLAG_REG = 0x5A
After Instruction
FLAG_REG = 0x00
Z = 1

CLRW **Clear W**

Syntax: [*label*] CLRW

Operands: None

Operation: 00h → (W)
1 → Z

Status Affected: Z

Encoding:

00	0001	0xxx	xxxx

Description: W register is cleared. Zero bit (Z) is set.

Words: 1

Cycles: 1

Q Cycle Activity:

Q1	Q2	Q3	Q4
Decode	NOP	Process data	Write to W

Example `CLRW`

Before Instruction
W = 0x5A
After Instruction
W = 0x00
Z = 1

CLRWDT **Clear Watchdog Timer**

Syntax: [*label*] CLRWDT

Operands: None

Operation: 00h → WDT
0 → WDT prescaler,
1 → $\overline{TO}$
1 → $\overline{PD}$

Status Affected: $\overline{TO}$, $\overline{PD}$

Encoding:

00	0000	0110	0100

Description: `CLRWDT` instruction resets the Watchdog Timer. It also resets the prescaler of the WDT. Status bits $\overline{TO}$ and $\overline{PD}$ are set.

Words: 1

Cycles: 1

Q Cycle Activity:

Q1	Q2	Q3	Q4
Decode	NOP	Process data	Clear WDT Counter

Example `CLRWDT`

Before Instruction
WDT counter = ?
After Instruction
WDT counter = 0x00
WDT prescaler = 0
$\overline{TO}$ = 1
$\overline{PD}$ = 1

© 1997 Microchip Technology Inc.

COMF — Complement f

Syntax: [*label*] COMF f,d

Operands: $0 \le f \le 127$
$d \in [0,1]$

Operation: $(\bar{f}) \rightarrow$ (dest)

Status Affected: Z

Encoding:

00	1001	dfff	ffff

Description: The contents of register 'f' are complemented. If 'd' is 0 the result is stored in W. If 'd' is 1 the result is stored back in register 'f'.

Words: 1

Cycles: 1

Q Cycle Activity:

Q1	Q2	Q3	Q4
Decode	Read register 'f'	Process data	Write to dest

Example

```
COMF        REG1,0
```

Before Instruction
REG1 = 0x13
After Instruction
REG1 = 0x13
W = 0xEC

DECF — Decrement f

Syntax: [*label*] DECF f,d

Operands: $0 \le f \le 127$
$d \in [0,1]$

Operation: (f) - 1 $\rightarrow$ (dest)

Status Affected: Z

Encoding:

00	0011	dfff	ffff

Description: Decrement register 'f'. If 'd' is 0 the result is stored in the W register. If 'd' is 1 the result is stored back in register 'f'.

Words: 1

Cycles: 1

Q Cycle Activity:

Q1	Q2	Q3	Q4
Decode	Read register 'f'	Process data	Write to dest

Example

```
DECF    CNT, 1
```

Before Instruction
CNT = 0x01
Z = 0
After Instruction
CNT = 0x00
Z = 1

DECFSZ — Decrement f, Skip if 0

Syntax: [*label*] DECFSZ f,d

Operands: $0 \le f \le 127$
$d \in [0,1]$

Operation: (f) - 1 $\rightarrow$ (dest); skip if result = 0

Status Affected: None

Encoding:

00	1011	dfff	ffff

Description: The contents of register 'f' are decremented. If 'd' is 0 the result is placed in the W register. If 'd' is 1 the result is placed back in register 'f'.
If the result is 1, the next instruction, is executed. If the result is 0, then a NOP is executed instead making it a 2TCY instruction.

Words: 1

Cycles: 1(2)

Q Cycle Activity:

Q1	Q2	Q3	Q4
Decode	Read register 'f'	Process data	Write to dest

If Skip: (2nd Cycle)

Q1	Q2	Q3	Q4
NOP	NOP	NOP	NOP

Example

```
HERE      DECFSZ    CNT, 1
          GOTO      LOOP
CONTINUE  •
          •
          •
```

Before Instruction
PC = address HERE
After Instruction
CNT = CNT - 1
if CNT = 0,
PC = address CONTINUE
if CNT ≠ 0,
PC = address HERE+1

© 1997 Microchip Technology Inc.

GOTO — Unconditional Branch

Syntax:	[*label*] GOTO k
Operands:	$0 \le k \le 2047$
Operation:	k → PC<10:0> PCLATH<4:3> → PC<12:11>
Status Affected:	None
Encoding:	10 | 1kkk | kkkk | kkkk
Description:	GOTO is an unconditional branch. The eleven bit immediate value is loaded into PC bits <10:0>. The upper bits of PC are loaded from PCLATH<4:3>. GOTO is a two cycle instruction.
Words:	1
Cycles:	2

Q Cycle Activity:

	Q1	Q2	Q3	Q4
1st Cycle	Decode	Read literal 'k'	Process data	Write to PC
2nd Cycle	NOP	NOP	NOP	NOP

Example

```
GOTO THERE
```

After Instruction
PC = Address THERE

INCF — Increment f

Syntax:	[*label*] INCF f,d
Operands:	$0 \le f \le 127$ $d \in [0,1]$
Operation:	(f) + 1 → (dest)
Status Affected:	Z
Encoding:	00 | 1010 | dfff | ffff
Description:	The contents of register 'f' are incremented. If 'd' is 0 the result is placed in the W register. If 'd' is 1 the result is placed back in register 'f'.
Words:	1
Cycles:	1

Q Cycle Activity:

Q1	Q2	Q3	Q4
Decode	Read register 'f'	Process data	Write to dest

Example

```
INCF    CNT, 1
```

Before Instruction
CNT = 0xFF
Z = 0
After Instruction
CNT = 0x00
Z = 1

© 1997 Microchip Technology Inc.

INCFSZ — Increment f, Skip if 0

Syntax:	[*label*] INCFSZ f,d
Operands:	$0 \le f \le 127$ $d \in [0,1]$
Operation:	(f) + 1 → (dest), skip if result = 0
Status Affected:	None
Encoding:	00 | 1111 | dfff | ffff
Description:	The contents of register 'f' are incremented. If 'd' is 0 the result is placed in the W register. If 'd' is 1 the result is placed back in register 'f'. If the result is 1, the next instruction is executed. If the result is 0, a NOP is executed instead making it a 2TCY instruction.
Words:	1
Cycles:	1(2)

Q Cycle Activity:

Q1	Q2	Q3	Q4
Decode	Read register 'f'	Process data	Write to dest

If Skip: (2nd Cycle)

Q1	Q2	Q3	Q4
NOP	NOP	NOP	NOP

Example

```
HERE      INCFSZ     CNT, 1
          GOTO       LOOP
CONTINUE  •
          •
          •
```

Before Instruction
PC = address HERE
After Instruction
CNT = CNT + 1
if CNT= 0,
PC = address CONTINUE
if CNT≠ 0,
PC = address HERE +1

IORLW — Inclusive OR Literal with W

Syntax:	[*label*] IORLW k
Operands:	$0 \le k \le 255$
Operation:	(W) .OR. k → (W)
Status Affected:	Z
Encoding:	11 | 1000 | kkkk | kkkk
Description:	The contents of the W register is OR'ed with the eight bit literal 'k'. The result is placed in the W register.
Words:	1
Cycles:	1

Q Cycle Activity:

Q1	Q2	Q3	Q4
Decode	Read literal 'k'	Process data	Write to W

Example

```
IORLW   0x35
```

Before Instruction
W = 0x9A
After Instruction
W = 0xBF
Z = 1

IORWF — Inclusive OR W with f

Syntax: [*label*] IORWF f,d

Operands: $0 \le f \le 127$
$d \in [0,1]$

Operation: (W) .OR. (f) → (dest)

Status Affected: $\overline{Z}$

Encoding:

00	0100	dfff	ffff

Description: Inclusive OR the W register with register 'f'. If 'd' is 0 the result is placed in the W register. If 'd' is 1 the result is placed back in register 'f'.

Words: 1

Cycles: 1

Q Cycle Activity:

Q1	Q2	Q3	Q4
Decode	Read register 'f'	Process data	Write to dest

Example

```
IORWF          RESULT, 0
```

Before Instruction
RESULT = 0x13
W = 0x91

After Instruction
RESULT = 0x13
W = 0x93
Z = 1

MOVF — Move f

Syntax: [*label*] MOVF f,d

Operands: $0 \le f \le 127$
$d \in [0,1]$

Operation: (f) → (dest)

Status Affected: Z

Encoding:

00	1000	dfff	ffff

Description: The contents of register f is moved to a destination dependant upon the status of d. If d = 0, destination is W register. If d = 1, the destination is file register f itself. d = 1 is useful to test a file register since status flag Z is affected.

Words: 1

Cycles: 1

Q Cycle Activity:

Q1	Q2	Q3	Q4
Decode	Read register 'f'	Process data	Write to dest

Example

```
MOVF     FSR, 0
```

After Instruction
W = value in FSR register
Z = 1

MOVLW — Move Literal to W

Syntax: [*label*] MOVLW k

Operands: $0 \le k \le 255$

Operation: k → (W)

Status Affected: None

Encoding:

11	00xx	kkkk	kkkk

Description: The eight bit literal 'k' is loaded into W register. The don't cares will assemble as 0's.

Words: 1

Cycles: 1

Q Cycle Activity:

Q1	Q2	Q3	Q4
Decode	Read literal 'k'	Process data	Write to W

Example

```
MOVLW    0x5A
```

After Instruction
W = 0x5A

MOVWF — Move W to f

Syntax: [*label*] MOVWF f

Operands: $0 \le f \le 127$

Operation: (W) → (f)

Status Affected: None

Encoding:

00	0000	1fff	ffff

Description: Move data from W register to register 'f'.

Words: 1

Cycles: 1

Q Cycle Activity:

Q1	Q2	Q3	Q4
Decode	Read register 'f'	Process data	Write register 'f'

Example

```
MOVWF    OPTION_REG
```

Before Instruction
OPTION = 0xFF
W = 0x4F

After Instruction
OPTION = 0x4F
W = 0x4F

© 1997 Microchip Technology Inc.

NOP	No Operation
Syntax:	[*label*] NOP
Operands:	None
Operation:	No operation
Status Affected:	None
Encoding:	00 | 0000 | 0xx0 | 0000
Description:	No operation.
Words:	1
Cycles:	1

Q Cycle Activity:

Q1	Q2	Q3	Q4
Decode	NOP	NOP	NOP

Example `NOP`

OPTION	Load Option Register
Syntax:	[*label*] OPTION
Operands:	None
Operation:	(W) → OPTION
Status Affected:	None
Encoding:	00 | 0000 | 0110 | 0010
Description:	The contents of the W register are loaded in the OPTION register. This instruction is supported for code compatibility with PIC16C5X products. Since OPTION is a readable/writable register, the user can directly address it.
Words:	1
Cycles:	1
Example	**To maintain upward compatibility with future PIC16CXX products, do not use this instruction.**

RETFIE	Return from Interrupt
Syntax:	[*label*] RETFIE
Operands:	None
Operation:	TOS → PC, 1 → GIE
Status Affected:	None
Encoding:	00 | 0000 | 0000 | 1001
Description:	Return from Interrupt. Stack is POPed and Top of Stack (TOS) is loaded in the PC. Interrupts are enabled by setting Global Interrupt Enable bit, GIE (INTCON<7>). This is a two cycle instruction.
Words:	1
Cycles:	2

Q Cycle Activity:

	Q1	Q2	Q3	Q4
1st Cycle	Decode	NOP	Set the GIE bit	Pop from the Stack
2nd Cycle	NOP	NOP	NOP	NOP

Example `RETFIE`

After Interrupt
PC = TOS
GIE = 1

RETLW — Return with Literal in W

Syntax:	[*label*] RETLW k
Operands:	$0 \le k \le 255$
Operation:	k → (W); TOS → PC
Status Affected:	None
Encoding:	11 | 01xx | kkkk | kkkk
Description:	The W register is loaded with the eight bit literal 'k'. The program counter is loaded from the top of the stack (the return address). This is a two cycle instruction.
Words:	1
Cycles:	2

Q Cycle Activity:

	Q1	Q2	Q3	Q4
1st Cycle	Decode	Read literal 'k'	NOP	Write to W, Pop from the Stack
2nd Cycle	NOP	NOP	NOP	NOP

Example

```
        CALL TABLE  ;W contains table
                    ;offset value
        •             ;W now has table value
        •
        •
TABLE   ADDWF PC    ;W = offset
        RETLW k1    ;Begin table
        RETLW k2    ;
        •
        •
        •
        RETLW kn    ; End of table
```

Before Instruction
W = 0x07
After Instruction
W = value of k8

RETURN — Return from Subroutine

Syntax:	[*label*] RETURN
Operands:	None
Operation:	TOS → PC
Status Affected:	None
Encoding:	00 | 0000 | 0000 | 1000
Description:	Return from subroutine. The stack is POPed and the top of the stack (TOS) is loaded into the program counter. This is a two cycle instruction.
Words:	1
Cycles:	2

Q Cycle Activity:

	Q1	Q2	Q3	Q4
1st Cycle	Decode	NOP	NOP	Pop from the Stack
2nd Cycle	NOP	NOP	NOP	NOP

Example

```
RETURN
```

After Interrupt
PC = TOS

© 1997 Microchip Technology Inc.

RLF — Rotate Left f through Carry

Syntax:	[*label*] RLF f,d
Operands:	$0 \le f \le 127$ $d \in [0,1]$
Operation:	See description below
Status Affected:	C
Encoding:	00 | 1101 | dfff | ffff
Description:	The contents of register 'f' are rotated one bit to the left through the Carry Flag. If 'd' is 0 the result is placed in the W register. If 'd' is 1 the result is stored back in register 'f'.

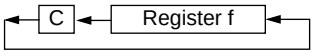

Words:	1
Cycles:	1

Q Cycle Activity:

Q1	Q2	Q3	Q4
Decode	Read register 'f'	Process data	Write to dest

Example

```
RLF        REG1,0
```

Before Instruction
```
REG1    =   1110 0110
C       =   0
```
After Instruction
```
REG1    =   1110 0110
W       =   1100 1100
C       =   1
```

RRF — Rotate Right f through Carry

Syntax:	[*label*] RRF f,d
Operands:	$0 \le f \le 127$ $d \in [0,1]$
Operation:	See description below
Status Affected:	C
Encoding:	00 | 1100 | dfff | ffff
Description:	The contents of register 'f' are rotated one bit to the right through the Carry Flag. If 'd' is 0 the result is placed in the W register. If 'd' is 1 the result is placed back in register 'f'.

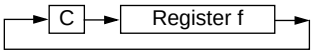

Words:	1
Cycles:	1

Q Cycle Activity:

Q1	Q2	Q3	Q4
Decode	Read register 'f'	Process data	Write to dest

Example

```
RRF        REG1,0
```

Before Instruction
```
REG1    =   1110 0110
C       =   0
```
After Instruction
```
REG1    =   1110 0110
W       =   0111 0011
C       =   0
```

SLEEP

Syntax: [*label*] SLEEP

Operands: None

Operation: 00h → WDT,
0 → WDT prescaler,
1 → $\overline{TO}$,
0 → $\overline{PD}$

Status Affected: $\overline{TO}$, $\overline{PD}$

Encoding:

00	0000	0110	0011

Description: The power-down status bit, $\overline{PD}$ is cleared. Time-out status bit, $\overline{TO}$ is set. Watchdog Timer and its prescaler are cleared.
The processor is put into SLEEP mode with the oscillator stopped. See Section 8.8 for more details.

Words: 1

Cycles: 1

Q Cycle Activity:

Q1	Q2	Q3	Q4
Decode	NOP	NOP	Go to Sleep

Example: SLEEP

SUBLW — Subtract W from Literal

Syntax: [*label*] SUBLW k

Operands: $0 \le k \le 255$

Operation: k - (W) → (W)

Status Affected: C, DC, Z

Encoding:

11	110x	kkkk	kkkk

Description: The W register is subtracted (2's complement method) from the eight bit literal 'k'. The result is placed in the W register.

Words: 1

Cycles: 1

Q Cycle Activity:

Q1	Q2	Q3	Q4
Decode	Read literal 'k'	Process data	Write to W

Example 1: SUBLW 0x02

Before Instruction

W = 1
C = ?
Z = ?

After Instruction

W = 1
C = 1; result is positive
Z = 0

Example 2: Before Instruction

W = 2
C = ?
Z = ?

After Instruction

W = 0
C = 1; result is zero
Z = 1

Example 3: Before Instruction

W = 3
C = ?
Z = ?

After Instruction

W = 0xFF
C = 0; result is negative
Z = 0

© 1997 Microchip Technology Inc.

SUBWF — Subtract W from f

Syntax: [*label*] SUBWF f,d

Operands: $0 \le f \le 127$
$d \in [0,1]$

Operation: (f) - (W) → (dest)

Status Affected: C, DC, Z

Encoding:

00	0010	dfff	ffff

Description: Subtract (2's complement method) W register from register 'f'. If 'd' is 0 the result is stored in the W register. If 'd' is 1 the result is stored back in register 'f'.

Words: 1

Cycles: 1

Q Cycle Activity:

Q1	Q2	Q3	Q4
Decode	Read register 'f'	Process data	Write to dest

Example 1: `SUBWF REG1,1`

Before Instruction

REG1 = 3
W = 2
C = ?
Z = ?

After Instruction

REG1 = 1
W = 2
C = 1; result is positive
Z = 0

Example 2: Before Instruction

REG1 = 2
W = 2
C = ?
Z = ?

After Instruction

REG1 = 0
W = 2
C = 1; result is zero
Z = 1

Example 3: Before Instruction

REG1 = 1
W = 2
C = ?
Z = ?

After Instruction

REG1 = 0xFF
W = 2
C = 0; result is negative
Z = 0

SWAPF — Swap Nibbles in f

Syntax: [*label*] SWAPF f,d

Operands: $0 \le f \le 127$
$d \in [0,1]$

Operation: (f<3:0>) → (dest<7:4>),
(f<7:4>) → (dest<3:0>)

Status Affected: None

Encoding:

00	1110	dfff	ffff

Description: The upper and lower nibbles of register 'f' are exchanged. If 'd' is 0 the result is placed in W register. If 'd' is 1 the result is placed in register 'f'.

Words: 1

Cycles: 1

Q Cycle Activity:

Q1	Q2	Q3	Q4
Decode	Read register 'f'	Process data	Write to dest

Example `SWAPF REG, 0`

Before Instruction

REG1 = 0xA5

After Instruction

REG1 = 0xA5
W = 0x5A

TRIS — Load TRIS Register

Syntax: [*label*] TRIS f

Operands: $5 \le f \le 7$

Operation: (W) → TRIS register f;

Status Affected: None

Encoding:

00	0000	0110	0fff

Description: The instruction is supported for code compatibility with the PIC16C5X products. Since TRIS registers are readable and writable, the user can directly address them.

Words: 1

Cycles: 1

Example

To maintain upward compatibility with future PIC16CXX products, do not use this instruction.

XORLW — Exclusive OR Literal with W

Syntax: [*label*] XORLW k

Operands: $0 \le k \le 255$

Operation: (W) .XOR. k → (W)

Status Affected: Z

Encoding:

11	1010	kkkk	kkkk

Description: The contents of the W register are XOR'ed with the eight bit literal 'k'. The result is placed in the W register.

Words: 1

Cycles: 1

Q Cycle Activity:

Q1	Q2	Q3	Q4
Decode	Read literal 'k'	Process data	Write to W

Example: `XORLW 0xAF`

Before Instruction

W = 0xB5

After Instruction

W = 0x1A

XORWF — Exclusive OR W with f

Syntax: [*label*] XORWF f,d

Operands: $0 \le f \le 127$
$d \in [0,1]$

Operation: (W) .XOR. (f) → (dest)

Status Affected: Z

Encoding:

00	0110	dfff	ffff

Description: Exclusive OR the contents of the W register with register 'f'. If 'd' is 0 the result is stored in the W register. If 'd' is 1 the result is stored back in register 'f'.

Words: 1

Cycles: 1

Q Cycle Activity:

Q1	Q2	Q3	Q4
Decode	Read register 'f'	Process data	Write to dest

Example `XORWF REG 1`

Before Instruction

REG = 0xAF
W = 0xB5

After Instruction

REG = 0x1A
W = 0xB5

© 1997 Microchip Technology Inc.

10.0 DEVELOPMENT SUPPORT

10.1 Development Tools

The PICmicro™ microcontrollers are supported with a full range of hardware and software development tools:

- PICMASTER/PICMASTER CE Real-Time In-Circuit Emulator
- ICEPIC Low-Cost PIC16C5X and PIC16CXXX In-Circuit Emulator
- PRO MATE® II Universal Programmer
- PICSTART® Plus Entry-Level Prototype Programmer
- PICDEM-1 Low-Cost Demonstration Board
- PICDEM-2 Low-Cost Demonstration Board
- PICDEM-3 Low-Cost Demonstration Board
- MPASM Assembler
- MPLAB™ SIM Software Simulator
- MPLAB-C (C Compiler)
- Fuzzy Logic Development System (*fuzzy*TECH®–MP)

10.2 PICMASTER: High Performance Universal In-Circuit Emulator with MPLAB IDE

The PICMASTER Universal In-Circuit Emulator is intended to provide the product development engineer with a complete microcontroller design tool set for all microcontrollers in the PIC12CXXX, PIC14C000, PIC16C5X, PIC16CXXX and PIC17CXX families. PICMASTER is supplied with the MPLAB™ Integrated Development Environment (IDE), which allows editing, “make” and download, and source debugging from a single environment.

Interchangeable target probes allow the system to be easily reconfigured for emulation of different processors. The universal architecture of the PICMASTER allows expansion to support all new Microchip microcontrollers.

The PICMASTER Emulator System has been designed as a real-time emulation system with advanced features that are generally found on more expensive development tools. The PC compatible 386 (and higher) machine platform and Microsoft Windows® 3.x environment were chosen to best make these features available to you, the end user.

A CE compliant version of PICMASTER is available for European Union (EU) countries.

10.3 ICEPIC: Low-Cost PIC16CXXX In-Circuit Emulator

ICEPIC is a low-cost in-circuit emulator solution for the Microchip PIC16C5X and PIC16CXXX families of 8-bit OTP microcontrollers.

ICEPIC is designed to operate on PC-compatible machines ranging from 286-AT® through Pentium™ based machines under Windows 3.x environment. ICEPIC features real time, non-intrusive emulation.

10.4 PRO MATE II: Universal Programmer

The PRO MATE II Universal Programmer is a full-featured programmer capable of operating in stand-alone mode as well as PC-hosted mode.

The PRO MATE II has programmable V_{DD} and V_{PP} supplies which allows it to verify programmed memory at V_{DD} min and V_{DD} max for maximum reliability. It has an LCD display for displaying error messages, keys to enter commands and a modular detachable socket assembly to support various package types. In stand-alone mode the PRO MATE II can read, verify or program PIC12CXXX, PIC14C000, PIC16C5X, PIC16CXXX and PIC17CXX devices. It can also set configuration and code-protect bits in this mode.

10.5 PICSTART Plus Entry Level Development System

The PICSTART programmer is an easy-to-use, low-cost prototype programmer. It connects to the PC via one of the COM (RS-232) ports. MPLAB Integrated Development Environment software makes using the programmer simple and efficient. PICSTART Plus is not recommended for production programming.

PICSTART Plus supports all PIC12CXXX, PIC14C000, PIC16C5X, PIC16CXXX and PIC17CXX devices with up to 40 pins. Larger pin count devices such as the PIC16C923 and PIC16C924 may be supported with an adapter socket.

© 1997 Microchip Technology Inc.

10.6 PICDEM-1 Low-Cost PIC16/17 Demonstration Board

The PICDEM-1 is a simple board which demonstrates the capabilities of several of Microchip's microcontrollers. The microcontrollers supported are: PIC16C5X (PIC16C54 to PIC16C58A), PIC16C61, PIC16C62X, PIC16C71, PIC16C8X, PIC17C42, PIC17C43 and PIC17C44. All necessary hardware and software is included to run basic demo programs. The users can program the sample microcontrollers provided with the PICDEM-1 board, on a PRO MATE II or PICSTART-Plus programmer, and easily test firmware. The user can also connect the PICDEM-1 board to the PICMASTER emulator and download the firmware to the emulator for testing. Additional prototype area is available for the user to build some additional hardware and connect it to the microcontroller socket(s). Some of the features include an RS-232 interface, a potentiometer for simulated analog input, push-button switches and eight LEDs connected to PORTB.

10.7 PICDEM-2 Low-Cost PIC16CXX Demonstration Board

The PICDEM-2 is a simple demonstration board that supports the PIC16C62, PIC16C64, PIC16C65, PIC16C73 and PIC16C74 microcontrollers. All the necessary hardware and software is included to run the basic demonstration programs. The user can program the sample microcontrollers provided with the PICDEM-2 board, on a PRO MATE II programmer or PICSTART-Plus, and easily test firmware. The PICMASTER emulator may also be used with the PICDEM-2 board to test firmware. Additional prototype area has been provided to the user for adding additional hardware and connecting it to the microcontroller socket(s). Some of the features include a RS-232 interface, push-button switches, a potentiometer for simulated analog input, a Serial EEPROM to demonstrate usage of the I^2C bus and separate headers for connection to an LCD module and a keypad.

10.8 PICDEM-3 Low-Cost PIC16CXXX Demonstration Board

The PICDEM-3 is a simple demonstration board that supports the PIC16C923 and PIC16C924 in the PLCC package. It will also support future 44-pin PLCC microcontrollers with a LCD Module. All the necessary hardware and software is included to run the basic demonstration programs. The user can program the sample microcontrollers provided with the PICDEM-3 board, on a PRO MATE II programmer or PICSTART Plus with an adapter socket, and easily test firmware. The PICMASTER emulator may also be used with the PICDEM-3 board to test firmware. Additional prototype area has been provided to the user for adding hardware and connecting it to the microcontroller socket(s). Some of the features include an RS-232 interface, push-button switches, a potentiometer for simulated analog input, a thermistor and separate headers for connection to an external LCD module and a keypad. Also provided on the PICDEM-3 board is an LCD panel, with 4 commons and 12 segments, that is capable of displaying time, temperature and day of the week. The PICDEM-3 provides an additional RS-232 interface and Windows 3.1 software for showing the demultiplexed LCD signals on a PC. A simple serial interface allows the user to construct a hardware demultiplexer for the LCD signals.

10.9 MPLAB Integrated Development Environment Software

The MPLAB IDE Software brings an ease of software development previously unseen in the 8-bit microcontroller market. MPLAB is a windows based application which contains:

- A full featured editor
- Three operating modes
  - editor
  - emulator
  - simulator
- A project manager
- Customizable tool bar and key mapping
- A status bar with project information
- Extensive on-line help

MPLAB allows you to:

- Edit your source files (either assembly or 'C')
- One touch assemble (or compile) and download to PIC16/17 tools (automatically updates all project information)
- Debug using:
  - source files
  - absolute listing file
- Transfer data dynamically via DDE (soon to be replaced by OLE)
- Run up to four emulators on the same PC

The ability to use MPLAB with Microchip's simulator allows a consistent platform and the ability to easily switch from the low cost simulator to the full featured emulator with minimal retraining due to development tools.

10.10 Assembler (MPASM)

The MPASM Universal Macro Assembler is a PC-hosted symbolic assembler. It supports all microcontroller series including the PIC12C5XX, PIC14000, PIC16C5X, PIC16CXXX, and PIC17CXX families.

MPASM offers full featured Macro capabilities, conditional assembly, and several source and listing formats. It generates various object code formats to support Microchip's development tools as well as third party programmers.

MPASM allows full symbolic debugging from PICMASTER, Microchip's Universal Emulator System.

© 1997 Microchip Technology Inc.

MPASM has the following features to assist in developing software for specific use applications.

- Provides translation of Assembler source code to object code for all Microchip microcontrollers.
- Macro assembly capability.
- Produces all the files (Object, Listing, Symbol, and special) required for symbolic debug with Microchip's emulator systems.
- Supports Hex (default), Decimal and Octal source and listing formats.

MPASM provides a rich directive language to support programming of the PIC16/17. Directives are helpful in making the development of your assemble source code shorter and more maintainable.

10.11 Software Simulator (MPLAB-SIM)

The MPLAB-SIM Software Simulator allows code development in a PC host environment. It allows the user to simulate the PIC16/17 series microcontrollers on an instruction level. On any given instruction, the user may examine or modify any of the data areas or provide external stimulus to any of the pins. The input/output radix can be set by the user and the execution can be performed in; single step, execute until break, or in a trace mode.

MPLAB-SIM fully supports symbolic debugging using MPLAB-C and MPASM. The Software Simulator offers the low cost flexibility to develop and debug code outside of the laboratory environment making it an excellent multi-project software development tool.

10.12 C Compiler (MPLAB-C)

The MPLAB-C Code Development System is a complete 'C' compiler and integrated development environment for Microchip's PIC16/17 family of microcontrollers. The compiler provides powerful integration capabilities and ease of use not found with other compilers.

For easier source level debugging, the compiler provides symbol information that is compatible with the MPLAB IDE memory display.

10.13 Fuzzy Logic Development System (*fuzzy*TECH-MP)

*fuzzy*TECH-MP fuzzy logic development tool is available in two versions - a low cost introductory version, MP Explorer, for designers to gain a comprehensive working knowledge of fuzzy logic system design; and a full-featured version, *fuzzy*TECH-MP, edition for implementing more complex systems.

Both versions include Microchip's *fuzzy*LAB™ demonstration board for hands-on experience with fuzzy logic systems implementation.

10.14 MP-DriveWay™ – Application Code Generator

MP-DriveWay is an easy-to-use Windows-based Application Code Generator. With MP-DriveWay you can visually configure all the peripherals in a PIC16/17 device and, with a click of the mouse, generate all the initialization and many functional code modules in C language. The output is fully compatible with Microchip's MPLAB-C C compiler. The code produced is highly modular and allows easy integration of your own code. MP-DriveWay is intelligent enough to maintain your code through subsequent code generation.

10.15 SEEVAL® Evaluation and Programming System

The SEEVAL SEEPROM Designer's Kit supports all Microchip 2-wire and 3-wire Serial EEPROMs. The kit includes everything necessary to read, write, erase or program special features of any Microchip SEEPROM product including Smart Serials™ and secure serials. The Total Endurance™ Disk is included to aid in trade-off analysis and reliability calculations. The total kit can significantly reduce time-to-market and result in an optimized system.

10.16 KEELOQ® Evaluation and Programming Tools

KEELOQ evaluation and programming tools support Microchips HCS Secure Data Products. The HCS evaluation kit includes an LCD display to show changing codes, a decoder to decode transmissions, and a programming interface to program test transmitters.

TABLE 10-1: DEVELOPMENT TOOLS FROM MICROCHIP

		PIC12C5XX	PIC14000	PIC16C5X	PIC16CXXX	PIC16C6X	PIC16C7XX	PIC16C8X	PIC16C9XX	PIC17C4X	PIC17C75X	24CXX 25CXX 93CXX	HCS200 HCS300 HCS301
Emulator Products	PICMASTER®/ PICMASTER-CE In-Circuit Emulator	✔	✔	✔	✔	✔	✔	✔	✔	✔	Available 3Q97		
	ICEPIC Low-Cost In-Circuit Emulator	✔		✔	✔	✔	✔	✔					
Software Tools	MPLAB™ Integrated Development Environment	✔	✔	✔	✔	✔	✔	✔	✔	✔	✔		
	MPLAB™ C Compiler	✔	✔	✔	✔	✔	✔	✔	✔	✔	✔		
	*fuzzy*TECH®-MP Explorer/Edition Fuzzy Logic Dev. Tool	✔	✔	✔	✔	✔	✔	✔	✔	✔			
	MP-DriveWay™ Applications Code Generator			✔	✔	✔	✔	✔		✔			
	Total Endurance™ Software Model											✔	
Programmers	PICSTART® Lite Ultra Low-Cost Dev. Kit			✔		✔	✔	✔					
	PICSTART® Plus Low-Cost Universal Dev. Kit	✔	✔	✔	✔	✔	✔	✔	✔	✔	✔		
	PRO MATE® II Universal Programmer	✔	✔	✔	✔	✔	✔	✔	✔	✔	✔	✔	✔
	KEELOQ® Programmer												✔
Demo Boards	SEEVAL® Designers Kit											✔	
	PICDEM-1			✔	✔			✔		✔			
	PICDEM-2					✔	✔						
	PICDEM-3								✔				
	KEELOQ® Evaluation Kit												✔

© 1997 Microchip Technology Inc.

Applicable Devices	710	71	711	715

11.0 ELECTRICAL CHARACTERISTICS FOR PIC16C710 AND PIC16C711

Absolute Maximum Ratings †

Ambient temperature under bias ..... -55 to +125˚C
Storage temperature ..... -65˚C to +150˚C
Voltage on any pin with respect to V_{SS} (except V_{DD}, $\overline{MCLR}$, and RA4) ..... -0.3V to (V_{DD} + 0.3V)
Voltage on V_{DD} with respect to V_{SS} ..... -0.3 to +7.5V
Voltage on $\overline{MCLR}$ with respect to V_{SS} ..... 0 to +14V
Voltage on RA4 with respect to Vss ..... 0 to +14V
Total power dissipation (Note 1) 1.0W
Maximum current out of V_{SS} pin ..... 300 mA
Maximum current into V_{DD} pin ..... 250 mA
Input clamp current, I_{IK} (V_I < 0 or V_I > V_{DD}) ..... ± 20 mA
Output clamp current, I_{OK} (V_O < 0 or V_O > V_{DD}) ..... ± 20 mA
Maximum output current sunk by any I/O pin ..... 25 mA
Maximum output current sourced by any I/O pin ..... 25 mA
Maximum current sunk by PORTA ..... 200 mA
Maximum current sourced by PORTA ..... 200 mA
Maximum current sunk by PORTB ..... 200 mA
Maximum current sourced by PORTB ..... 200 mA

Note 1: Power dissipation is calculated as follows: Pdis = V_{DD} x {I_{DD} - ∑ I_{OH}} + ∑ {(V_{DD} - V_{OH}) x I_{OH}} + ∑(V_{OL} x I_{OL})

† NOTICE: Stresses above those listed under “Absolute Maximum Ratings” may cause permanent damage to the device. This is a stress rating only and functional operation of the device at those or any other conditions above those indicated in the operation listings of this specification is not implied. Exposure to maximum rating conditions for extended periods may affect device reliability.

TABLE 11-1: CROSS REFERENCE OF DEVICE SPECS FOR OSCILLATOR CONFIGURATIONS AND FREQUENCIES OF OPERATION (COMMERCIAL DEVICES)

OSC	PIC16C710-04 PIC16C711-04	PIC16C710-10 PIC16C711-10	PIC16C710-20 PIC16C711-20	PIC16LC710-04 PIC16LC711-04	PIC16C710/JW PIC16C711/JW
RC	V_{DD}: 4.0V to 6.0V I_{DD}: 5 mA max. at 5.5V I_{PD}: 21 µA max. at 4V Freq:4 MHz max.	V_{DD}: 4.5V to 5.5V I_{DD}: 2.7 mA typ. at 5.5V I_{PD}: 1.5 µA typ. at 4V Freq: 4 MHz max.	V_{DD}: 4.5V to 5.5V I_{DD}: 2.7 mA typ. at 5.5V I_{PD}: 1.5 µA typ. at 4V Freq: 4 MHz max.	V_{DD}: 2.5V to 6.0V I_{DD}: 3.8 mA typ. at 3.0V I_{PD}: 5.0 µA typ. at 3V Freq: 4 MHz max.	V_{DD}: 4.0V to 6.0V I_{DD}: 5 mA max. at 5.5V I_{PD}: 21 µA max. at 4V Freq:4 MHz max.
XT	V_{DD}: 4.0V to 6.0V I_{DD}: 5 mA max. at 5.5V I_{PD}: 21 µA max. at 4V Freq: 4 MHz max.	V_{DD}: 4.5V to 5.5V I_{DD}: 2.7 mA typ. at 5.5V I_{PD}: 1.5 µA typ. at 4V Freq: 4 MHz max.	V_{DD}: 4.5V to 5.5V I_{DD}: 2.7 mA typ. at 5.5V I_{PD}: 1.5 µA typ. at 4V Freq: 4 MHz max.	V_{DD}: 2.5V to 6.0V I_{DD}: 3.8 mA typ. at 3.0V I_{PD}: 5.0 µA typ. at 3V Freq: 4 MHz max.	V_{DD}: 4.0V to 6.0V I_{DD}: 5 mA max. at 5.5V I_{PD}: 21 µA max. at 4V Freq: 4 MHz max.
HS	V_{DD}: 4.5V to 5.5V I_{DD}: 13.5 mA typ. at 5.5V I_{PD}: 1.5 µA typ. at 4.5V Freq: 4 MHz max.	V_{DD}: 4.5V to 5.5V I_{DD}: 30 mA max. at 5.5V I_{PD}: 1.5 µA typ. at 4.5V Freq: 10 MHz max.	V_{DD}: 4.5V to 5.5V I_{DD}: 30 mA max. at 5.5V I_{PD}: 1.5 µA typ. at 4.5V Freq:20 MHz max.	Not recommended for use in HS mode	V_{DD}: 4.5V to 5.5V I_{DD}: 30 mA max. at 5.5V I_{PD}: 1.5 µA typ. at 4.5V Freq: 10 MHz max.
LP	V_{DD}: 4.0V to 6.0V I_{DD}: 52.5 µA typ. at 32 kHz, 4.0V I_{PD}: 0.9 µA typ. at 4.0V Freq: 200 kHz max.	Not recommended for use in LP mode	Not recommended for use in LP mode	V_{DD}: 2.5V to 6.0V I_{DD}: 48 µA max. at 32 kHz, 3.0V I_{PD}: 5.0 µA max. at 3.0V Freq: 200 kHz max.	V_{DD}: 2.5V to 6.0V I_{DD}: 48 µA max. at 32 kHz, 3.0V I_{PD}: 5.0 µA max. at 3.0V Freq: 200 kHz max.

© 1997 Microchip Technology Inc.

Applicable Devices	710	71	711	715

11.1 DC Characteristics: PIC16C710-04 (Commercial, Industrial, Extended) PIC16C711-04 (Commercial, Industrial, Extended) PIC16C710-10 (Commercial, Industrial, Extended) PIC16C711-10 (Commercial, Industrial, Extended) PIC16C710-20 (Commercial, Industrial, Extended) PIC16C711-20 (Commercial, Industrial, Extended)

DC CHARACTERISTICS			Standard Operating Conditions (unless otherwise stated) Operating temperature 0˚C ≤ TA ≤ +70˚C (commercial) -40˚C ≤ TA ≤ +85˚C (industrial) -40˚C ≤ TA ≤ +125˚C (extended)				
Param. No.	**Characteristic**	**Sym**	**Min**	**Typ†**	**Max**	**Units**	**Conditions**
D001	Supply Voltage	VDD	4.0	-	6.0	V	XT, RC and LP osc configuration
D001A			4.5	-	5.5	V	HS osc configuration
D002*	RAM Data Retention Voltage (Note 1)	VDR	-	1.5	-	V	
D003	VDD start voltage to ensure internal Power-on Reset signal	VPOR	-	VSS	-	V	See section on Power-on Reset for details
D004*	VDD rise rate to ensure internal Power-on Reset signal	SVDD	0.05	-	-	V/ms	See section on Power-on Reset for details
D005	Brown-out Reset Voltage	BVDD	3.7	4.0	4.3	V	BODEN configuration bit is enabled
			3.7	4.0	4.4	V	Extended Range Only
D010	Supply Current (Note 2)	IDD	-	2.7	5	mA	XT, RC osc configuration FOSC = 4 MHz, VDD = 5.5V (Note 4)
D013			-	13.5	30	mA	HS osc configuration FOSC = 20 MHz, VDD = 5.5V
D015	Brown-out Reset Current (Note 5)	ΔIBOR	-	300*	500	μA	BOR enabled VDD = 5.0V
D020	Power-down Current (Note 3)	IPD	-	10.5	42	μA	VDD = 4.0V, WDT enabled, -40°C to +85°C
D021			-	1.5	21	μA	VDD = 4.0V, WDT disabled, -0°C to +70°C
D021A			-	1.5	24	μA	VDD = 4.0V, WDT disabled, -40°C to +85°C
D021B			-	1.5	30	μA	VDD = 4.0V, WDT disabled, -40°C to +125°C
D023	Brown-out Reset Current (Note 5)	ΔIBOR	-	300*	500	μA	BOR enabled VDD = 5.0V

* These parameters are characterized but not tested.

† Data in "Typ" column is at 5V, 25˚C unless otherwise stated. These parameters are for design guidance only and are not tested.

Note 1: This is the limit to which VDD can be lowered without losing RAM data.

2: The supply current is mainly a function of the operating voltage and frequency. Other factors such as I/O pin loading and switching rate, oscillator type, internal code execution pattern, and temperature also have an impact on the current consumption.
The test conditions for all IDD measurements in active operation mode are:
OSC1 = external square wave, from rail to rail; all I/O pins tristated, pulled to VDD
$\overline{\text{MCLR}}$ = VDD; WDT enabled/disabled as specified.

3: The power-down current in SLEEP mode does not depend on the oscillator type. Power-down current is measured with the part in SLEEP mode, with all I/O pins in hi-impedance state and tied to VDD and VSS.

4: For RC osc configuration, current through Rext is not included. The current through the resistor can be estimated by the formula Ir = VDD/2Rext (mA) with Rext in kOhm.

5: The Δ current is the additional current consumed when this peripheral is enabled. This current should be added to the base IDD or IPD measurement.

© 1997 Microchip Technology Inc.

Applicable Devices	710	71	711	715

11.2 DC Characteristics: PIC16LC710-04 (Commercial, Industrial, Extended) PIC16LC711-04 (Commercial, Industrial, Extended)

DC CHARACTERISTICS							Standard Operating Conditions (unless otherwise stated) Operating temperature 0˚C ≤ TA ≤ +70˚C (commercial) -40˚C ≤ TA ≤ +85˚C (industrial) -40˚C ≤ TA ≤ +125˚C (extended)
Param No.	**Characteristic**	**Sym**	**Min**	**Typ†**	**Max**	**Units**	**Conditions**
D001	Supply Voltage						
	Commercial/Industrial	VDD	2.5	-	6.0	V	LP, XT, RC osc configuration (DC - 4 MHz)
	Extended	VDD	3.0	-	6.0	V	LP, XT, RC osc configuration (DC - 4 MHz)
D002*	RAM Data Retention Voltage (Note 1)	VDR	-	1.5	-	V	
D003	VDD start voltage to ensure internal Power-on Reset signal	VPOR	-	VSS	-	V	See section on Power-on Reset for details
D004*	VDD rise rate to ensure internal Power-on Reset signal	SVDD	0.05	-	-	V/ms	See section on Power-on Reset for details
D005	Brown-out Reset Voltage	BVDD	3.7	4.0	4.3	V	BODEN configuration bit is enabled
D010	Supply Current (Note 2)	IDD	-	2.0	3.8	mA	XT, RC osc configuration FOSC = 4 MHz, VDD = 3.0V (Note 4)
D010A			-	22.5	48	µA	LP osc configuration FOSC = 32 kHz, VDD = 3.0V, WDT disabled
D015	Brown-out Reset Current (Note 5)	ΔIBOR	-	300*	500	µA	BOR enabled VDD = 5.0V
D020	Power-down Current (Note 3)	IPD	-	7.5	30	µA	VDD = 3.0V, WDT enabled, -40°C to +85°C
D021			-	0.9	5	µA	VDD = 3.0V, WDT disabled, 0°C to +70°C
D021A			-	0.9	5	µA	VDD = 3.0V, WDT disabled, -40°C to +85°C
D021B			-	0.9	10	µA	VDD = 3.0V, WDT disabled, -40°C to +125°C
D023	Brown-out Reset Current (Note 5)	ΔIBOR	-	300*	500	µA	BOR enabled VDD = 5.0V

* These parameters are characterized but not tested.

† Data in "Typ" column is at 5V, 25˚C unless otherwise stated. These parameters are for design guidance only and are not tested.

Note 1: This is the limit to which VDD can be lowered without losing RAM data.

2: The supply current is mainly a function of the operating voltage and frequency. Other factors such as I/O pin loading and switching rate, oscillator type, internal code execution pattern, and temperature also have an impact on the current consumption.
The test conditions for all IDD measurements in active operation mode are:
OSC1 = external square wave, from rail to rail; all I/O pins tristated, pulled to VDD
$\overline{\text{MCLR}}$ = VDD; WDT enabled/disabled as specified.

3: The power-down current in SLEEP mode does not depend on the oscillator type. Power-down current is measured with the part in SLEEP mode, with all I/O pins in hi-impedance state and tied to VDD and VSS.

4: For RC osc configuration, current through Rext is not included. The current through the resistor can be estimated by the formula Ir = VDD/2Rext (mA) with Rext in kOhm.

5: The Δ current is the additional current consumed when this peripheral is enabled. This current should be added to the base IDD or IPD measurement.

Applicable Devices	710	71	711	715

11.3 DC Characteristics: PIC16C710-04 (Commercial, Industrial, Extended)
PIC16C711-04 (Commercial, Industrial, Extended)
PIC16C710-10 (Commercial, Industrial, Extended)
PIC16C711-10 (Commercial, Industrial, Extended)
PIC16C710-20 (Commercial, Industrial, Extended)
PIC16C711-20 (Commercial, Industrial, Extended)
PIC16LC710-04 (Commercial, Industrial, Extended)
PIC16LC711-04 (Commercial, Industrial, Extended)

DC CHARACTERISTICS							**Standard Operating Conditions (unless otherwise stated)** Operating temperature 0˚C ≤ TA ≤ +70˚C (commercial) -40˚C ≤ TA ≤ +85˚C (industrial) -40˚C ≤ TA ≤ +125˚C (extended) Operating voltage VDD range as described in DC spec Section 11.1 and Section 11.2.
Param No.	**Characteristic**	**Sym**	**Min**	**Typ †**	**Max**	**Units**	**Conditions**
	Input Low Voltage						
	I/O ports	VIL					
D030	with TTL buffer		VSS	-	0.15VDD	V	For entire VDD range
D030A			VSS	-	0.8V	V	4.5 ≤ VDD ≤ 5.5V
D031	with Schmitt Trigger buffer		VSS	-	0.2VDD	V	
D032	$\overline{MCLR}$, OSC1 (in RC mode)		VSS	-	0.2VDD	V	
D033	OSC1 (in XT, HS and LP)		VSS	-	0.3VDD	V	Note1
	Input High Voltage						
	I/O ports	VIH		-			
D040	with TTL buffer		2.0	-	VDD	V	4.5 ≤ VDD ≤ 5.5V
D040A			0.25VDD + 0.8V	-	VDD	V	For entire VDD range
D041	with Schmitt Trigger buffer		0.8VDD	-	VDD	V	For entire VDD range
D042	$\overline{MCLR}$, RB0/INT		0.8VDD	-	VDD	V	
D042A	OSC1 (XT, HS and LP)		0.7VDD	-	VDD	V	Note1
D043	OSC1 (in RC mode)		0.9VDD	-	VDD	V	
D070	PORTB weak pull-up current	IPURB	50	250	400	μA	VDD = 5V, VPIN = VSS
	Input Leakage Current (Notes 2, 3)						
D060	I/O ports	IIL	-	-	±1	μA	Vss ≤ VPIN ≤ VDD, Pin at hi-impedance
D061	$\overline{MCLR}$, RA4/T0CKI		-	-	±5	μA	Vss ≤ VPIN ≤ VDD
D063	OSC1		-	-	±5	μA	Vss ≤ VPIN ≤ VDD, XT, HS and LP osc configuration

* These parameters are characterized but not tested.

† Data in “Typ” column is at 5V, 25°C unless otherwise stated. These parameters are for design guidance only and are not tested.

Note 1: In RC oscillator configuration, the OSC1/CLKIN pin is a Schmitt Trigger input. It is not recommended that the PIC16C7X be driven with external clock in RC mode.

2: The leakage current on the $\overline{MCLR}$ pin is strongly dependent on the applied voltage level. The specified levels represent normal operating conditions. Higher leakage current may be measured at different input voltages.

3: Negative current is defined as current sourced by the pin.

© 1997 Microchip Technology Inc.

Applicable Devices	710	71	711	715

DC CHARACTERISTICS

Standard Operating Conditions (unless otherwise stated)
Operating temperature 0˚C ≤ TA ≤ +70˚C (commercial)
-40˚C ≤ TA ≤ +85˚C (industrial)
-40˚C ≤ TA ≤ +125˚C (extended)
Operating voltage VDD range as described in DC spec Section 11.1 and Section 11.2.

Param No.	Characteristic	Sym	Min	Typ †	Max	Units	Conditions
	Output Low Voltage						
D080	I/O ports	VOL	-	-	0.6	V	IOL = 8.5 mA, VDD = 4.5V, -40°C to +85°C
D080A			-	-	0.6	V	IOL = 7.0 mA, VDD = 4.5V, -40°C to +125°C
D083	OSC2/CLKOUT (RC osc config)		-	-	0.6	V	IOL = 1.6 mA, VDD = 4.5V, -40°C to +85°C
D083A			-	-	0.6	V	IOL = 1.2 mA, VDD = 4.5V, -40°C to +125°C
	Output High Voltage						
D090	I/O ports (Note 3)	VOH	VDD - 0.7	-	-	V	IOH = -3.0 mA, VDD = 4.5V, -40°C to +85°C
D090A			VDD - 0.7	-	-	V	IOH = -2.5 mA, VDD = 4.5V, -40°C to +125°C
D092	OSC2/CLKOUT (RC osc config)		VDD - 0.7	-	-	V	IOH = -1.3 mA, VDD = 4.5V, -40°C to +85°C
D092A			VDD - 0.7	-	-	V	IOH = -1.0 mA, VDD = 4.5V, -40°C to +125°C
D130*	**Open-Drain High Voltage**	VOD	-	-	14	V	RA4 pin
	Capacitive Loading Specs on Output Pins						
D100	OSC2 pin	COSC2	-	-	15	pF	In XT, HS and LP modes when external clock is used to drive OSC1.
D101	All I/O pins and OSC2 (in RC mode)	CIO	-	-	50	pF	

* These parameters are characterized but not tested.

† Data in “Typ” column is at 5V, 25°C unless otherwise stated. These parameters are for design guidance only and are not tested.

Note 1: In RC oscillator configuration, the OSC1/CLKIN pin is a Schmitt Trigger input. It is not recommended that the PIC16C7X be driven with external clock in RC mode.

2: The leakage current on the $\overline{\text{MCLR}}$ pin is strongly dependent on the applied voltage level. The specified levels represent normal operating conditions. Higher leakage current may be measured at different input voltages.

3: Negative current is defined as current sourced by the pin.

Applicable Devices	710	71	711	715

11.4 Timing Parameter Symbology

The timing parameter symbols have been created following one of the following formats:

1. TppS2ppS
2. TppS

T			
F	Frequency	T	Time

Lowercase letters (pp) and their meanings:

pp			
cc	CCP1	osc	OSC1
ck	CLKOUT	rd	$\overline{RD}$
cs	$\overline{CS}$	rw	$\overline{RD}$ or $\overline{WR}$
di	SDI	sc	SCK
do	SDO	ss	$\overline{SS}$
dt	Data in	t0	T0CKI
io	I/O port	t1	T1CKI
mc	$\overline{MCLR}$	wr	$\overline{WR}$

Uppercase letters and their meanings:

S			
F	Fall	P	Period
H	High	R	Rise
I	Invalid (Hi-impedance)	V	Valid
L	Low	Z	Hi-impedance

FIGURE 11-1: LOAD CONDITIONS

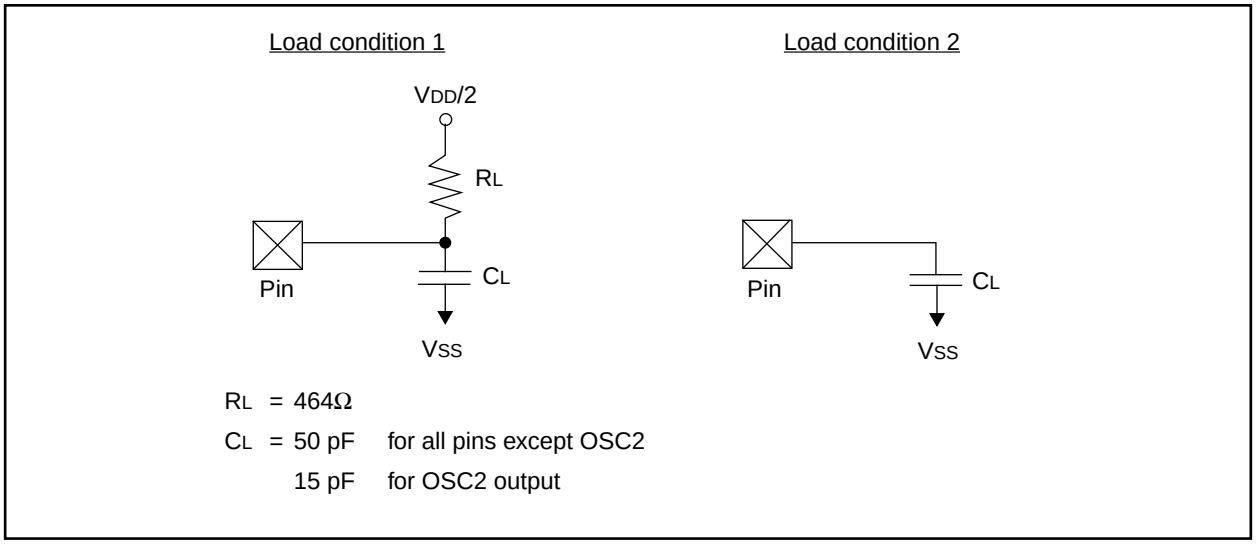

© 1997 Microchip Technology Inc.

Applicable Devices	710	71	711	715

11.5 Timing Diagrams and Specifications

FIGURE 11-2: EXTERNAL CLOCK TIMING

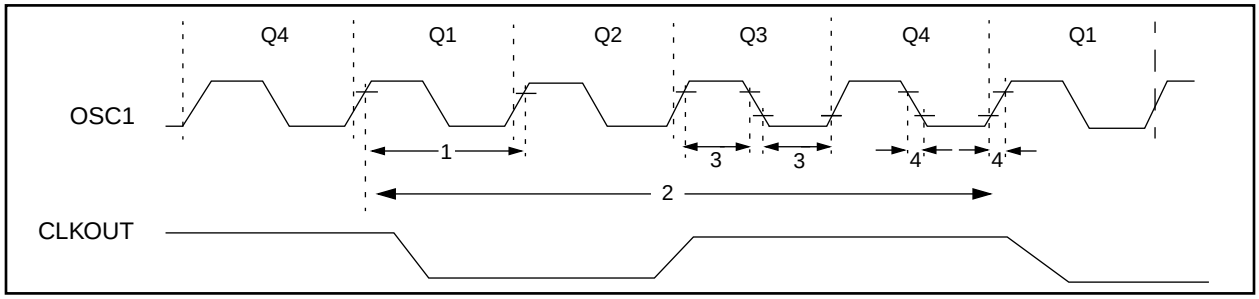

TABLE 11-2: EXTERNAL CLOCK TIMING REQUIREMENTS

Parameter No.	Sym	Characteristic	Min	Typ†	Max	Units	Conditions
	Fosc	**External CLKIN Frequency (Note 1)**	DC	—	4	MHz	XT osc mode
			DC	—	4	MHz	HS osc mode (-04)
			DC	—	10	MHz	HS osc mode (-10)
			DC	—	20	MHz	HS osc mode (-20)
			DC	—	200	kHz	LP osc mode
		Oscillator Frequency (Note 1)	DC	—	4	MHz	RC osc mode
			0.1	—	4	MHz	XT osc mode
			4	—	20	MHz	HS osc mode
			5	—	200	kHz	LP osc mode
1	Tosc	**External CLKIN Period (Note 1)**	250	—	—	ns	XT osc mode
			250	—	—	ns	HS osc mode (-04)
			100	—	—	ns	HS osc mode (-10)
			50	—	—	ns	HS osc mode (-20)
			5	—	—	µs	LP osc mode
		Oscillator Period (Note 1)	250	—	—	ns	RC osc mode
			250	—	10,000	ns	XT osc mode
			250	—	250	ns	HS osc mode (-04)
			100	—	250	ns	HS osc mode (-10)
			50	—	250	ns	HS osc mode (-20)
			5	—	—	µs	LP osc mode
2	TCY	**Instruction Cycle Time (Note 1)**	200	—	DC	ns	TCY = 4/FOSC
3	TosL, TosH	**External Clock in (OSC1) High or Low Time**	50	—	—	ns	XT oscillator
			2.5	—	—	µs	LP oscillator
			10	—	—	ns	HS oscillator
4	TosR, TosF	**External Clock in (OSC1) Rise or Fall Time**	—	—	25	ns	XT oscillator
			—	—	50	ns	LP oscillator
			—	—	15	ns	HS oscillator

† Data in "Typ" column is at 5V, 25˚C unless otherwise stated. These parameters are for design guidance only and are not tested.

Note 1: Instruction cycle period (TCY) equals four times the input oscillator time-base period. All specified values are based on characterization data for that particular oscillator type under standard operating conditions with the device executing code. Exceeding these specified limits may result in an unstable oscillator operation and/or higher than expected current consumption. All devices are tested to operate at "min." values with an external clock applied to the OSC1/CLKIN pin. When an external clock input is used, the "Max." cycle time limit is "DC" (no clock) for all devices. OSC2 is disconnected (has no loading) for the PIC16C710/711.

© 1997 Microchip Technology Inc.

Applicable Devices	710	71	711	715

FIGURE 11-3: CLKOUT AND I/O TIMING

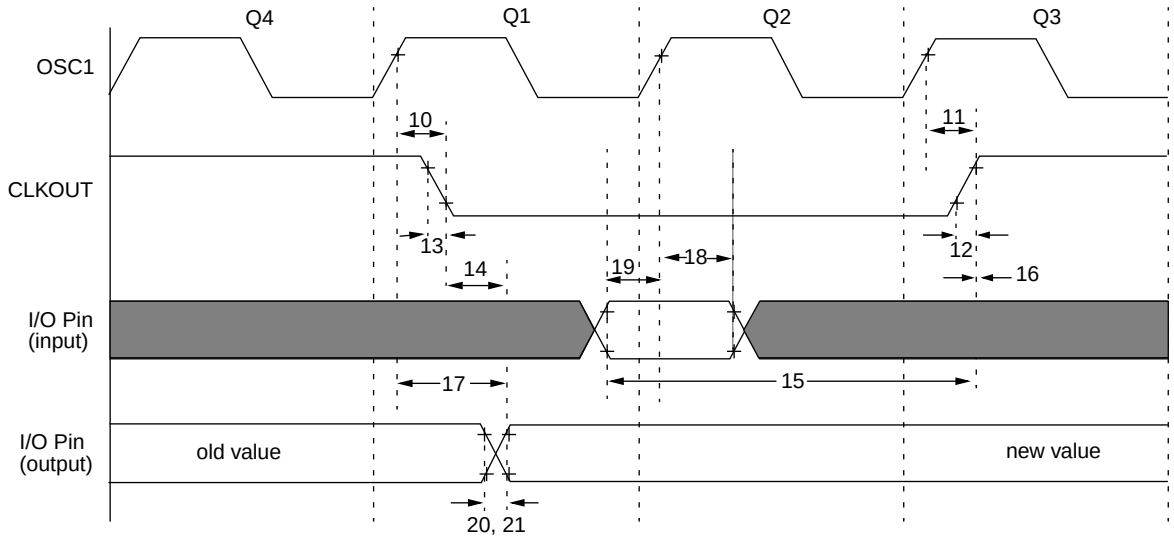

Note: Refer to Figure 11-1 for load conditions.

TABLE 11-3: CLKOUT AND I/O TIMING REQUIREMENTS

Parameter No.	Sym	Characteristic		Min	Typ†	Max	Units	Conditions
10*	TosH2ckL	OSC1↑ to CLKOUT↓		—	15	30	ns	Note 1
11*	TosH2ckH	OSC1↑ to CLKOUT↑		—	15	30	ns	Note 1
12*	TckR	CLKOUT rise time		—	5	15	ns	Note 1
13*	TckF	CLKOUT fall time		—	5	15	ns	Note 1
14*	TckL2ioV	CLKOUT ↓ to Port out valid		—	—	0.5TCY + 20	ns	Note 1
15*	TioV2ckH	Port in valid before CLKOUT ↑		0.25TCY + 25	—	—	ns	Note 1
16*	TckH2ioI	Port in hold after CLKOUT ↑		0	—	—	ns	Note 1
17*	TosH2ioV	OSC1↑ (Q1 cycle) to Port out valid		—	—	80 - 100	ns	
18*	TosH2ioI	OSC1↑ (Q2 cycle) to Port input invalid (I/O in hold time)		TBD	—	—	ns	
19*	TioV2osH	Port input valid to OSC1↑ (I/O in setup time)		TBD	—	—	ns	
20*	TioR	Port output rise time	PIC16**C**710/711	—	10	25	ns	
			PIC16**LC**710/711	—	—	60	ns	
21*	TioF	Port output fall time	PIC16**C**710/711	—	10	25	ns	
			PIC16**LC**710/711	—	—	60	ns	
22††*	Tinp	INT pin high or low time		20	—	—	ns	
23††*	Trbp	RB7:RB4 change INT high or low time		20	—	—	ns	

* These parameters are characterized but not tested.

† Data in "Typ" column is at 5V, 25˚C unless otherwise stated. These parameters are for design guidance only and are not tested.

†† These parameters are asynchronous events not related to any internal clock edges.

Note 1: Measurements are taken in RC Mode where CLKOUT output is 4 x TOSC.

© 1997 Microchip Technology Inc.

Applicable Devices	710	71	711	715

FIGURE 11-4: RESET, WATCHDOG TIMER, OSCILLATOR START-UP TIMER AND POWER-UP TIMER TIMING

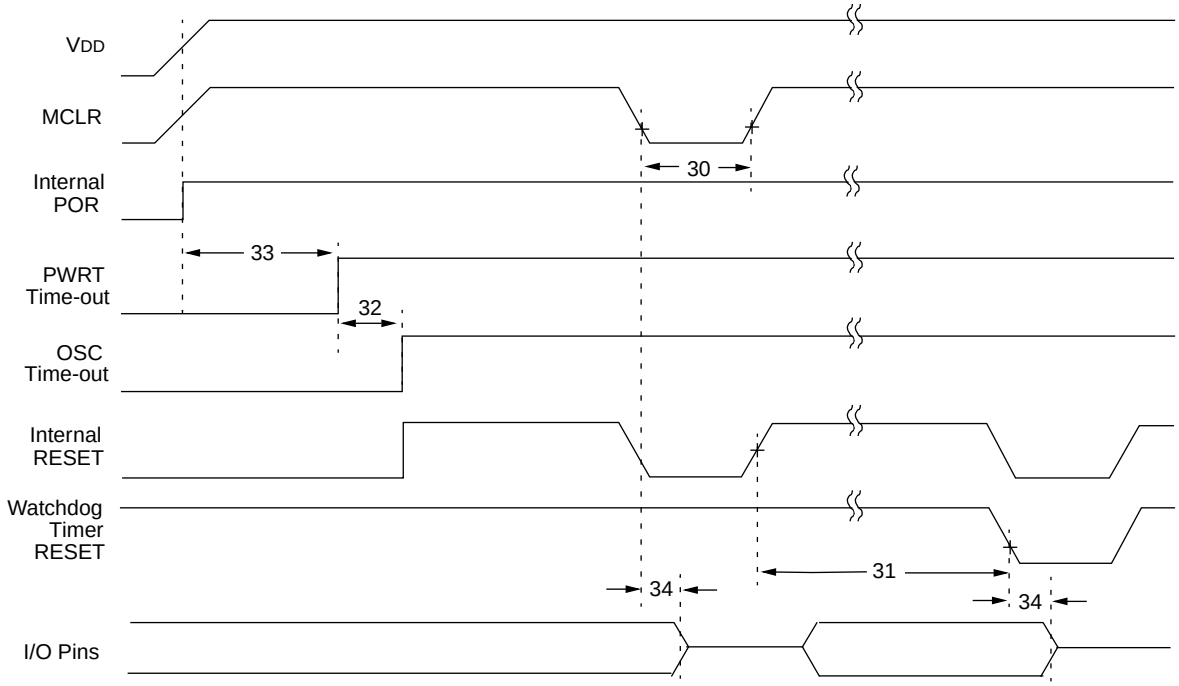

Note: Refer to Figure 11-1 for load conditions.

FIGURE 11-5: BROWN-OUT RESET TIMING

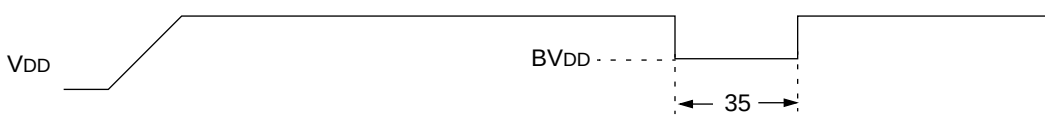

TABLE 11-4: RESET, WATCHDOG TIMER, OSCILLATOR START-UP TIMER, POWER-UP TIMER, AND BROWN-OUT RESET REQUIREMENTS

Parameter No.	Sym	Characteristic	Min	Typ†	Max	Units	Conditions
30	TmcL	$\overline{\text{MCLR}}$ Pulse Width (low)	1	—	—	µs	VDD = 5V, -40˚C to +125˚C
31	Twdt	Watchdog Timer Time-out Period (No Prescaler)	7*	18	33*	ms	VDD = 5V, -40˚C to +125˚C
32	Tost	Oscillation Start-up Timer Period	—	1024TOSC	—	—	TOSC = OSC1 period
33	Tpwrt	Power up Timer Period	28*	72	132*	ms	VDD = 5V, -40˚C to +125˚C
34	TIOZ	I/O Hi-impedance from $\overline{\text{MCLR}}$ Low or Watchdog Timer Reset	—	—	1.1	µs	
35	TBOR	Brown-out Reset pulse width	100	—	—	µs	3.8V ≤ VDD ≤ 4.2V

* These parameters are characterized but not tested.

† Data in "Typ" column is at 5V, 25˚C unless otherwise stated. These parameters are for design guidance only and are not tested.

Applicable Devices	710	71	711	715

FIGURE 11-6: TIMER0 EXTERNAL CLOCK TIMINGS

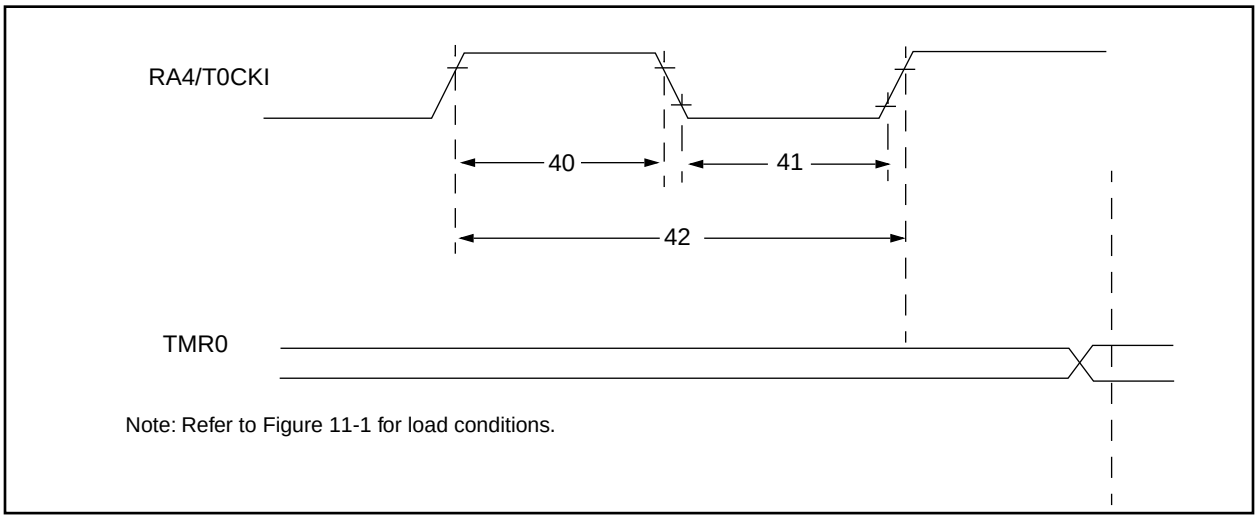

Note: Refer to Figure 11-1 for load conditions.

TABLE 11-5: TIMER0 EXTERNAL CLOCK REQUIREMENTS

Param No.	Sym	Characteristic		Min	Typ†	Max	Units	Conditions
40	Tt0H	T0CKI High Pulse Width	No Prescaler	0.5TCY + 20*	—	—	ns	Must also meet parameter 42
			With Prescaler	10*	—	—	ns	
41	Tt0L	T0CKI Low Pulse Width	No Prescaler	0.5TCY + 20*	—	—	ns	Must also meet parameter 42
			With Prescaler	10*	—	—	ns	
42	Tt0P	T0CKI Period		Greater of: 20 ns or $\frac{T_{CY} + 40}{N}$*	—	—	ns	N = prescale value (2, 4,..., 256)
48	Tcke2tmrl	Delay from external clock edge to timer increment		2Tosc	—	7Tosc	—	

* These parameters are characterized but not tested.

† Data in "Typ" column is at 5V, 25˚C unless otherwise stated. These parameters are for design guidance only and are not tested.

© 1997 Microchip Technology Inc.

Applicable Devices	710	71	711	715

TABLE 11-6: A/D CONVERTER CHARACTERISTICS: PIC16C710/711-04 (COMMERCIAL, INDUSTRIAL, EXTENDED) PIC16C710/711-10 (COMMERCIAL, INDUSTRIAL, EXTENDED) PIC16C710/711-20 (COMMERCIAL, INDUSTRIAL, EXTENDED) PIC16LC710/711-04 (COMMERCIAL, INDUSTRIAL, EXTENDED)

Param No.	Sym	Characteristic	Min	Typ†	Max	Units	Conditions
A01	NR	Resolution	—	—	8-bits	bit	VREF = VDD, VSS ≤ AIN ≤ VREF
A02	EABS	Absolute error	—	—	< ± 1	LSb	VREF = VDD, VSS ≤ AIN ≤ VREF
A03	EIL	Integral linearity error	—	—	< ± 1	LSb	VREF = VDD, VSS ≤ AIN ≤ VREF
A04	EDL	Differential linearity error	—	—	< ± 1	LSb	VREF = VDD, VSS ≤ AIN ≤ VREF
A05	EFS	Full scale error	—	—	< ± 1	LSb	VREF = VDD, VSS ≤ AIN ≤ VREF
A06	EOFF	Offset error	—	—	< ± 1	LSb	VREF = VDD, VSS ≤ AIN ≤ VREF
A10	—	Monotonicity	—	guaranteed	—	—	VSS ≤ VAIN ≤ VREF
A20	VREF	Reference voltage	2.5V	—	VDD + 0.3	V	
A25	VAIN	Analog input voltage	VSS - 0.3	—	VREF + 0.3	V	
A30	ZAIN	Recommended impedance of analog voltage source	—	—	10.0	kΩ	
A40	IAD	A/D conversion current (VDD)	—	180	—	μA	Average current consumption when A/D is on. (Note 1)
A50	IREF	VREF input current (Note 2)	10	—	1000	μA	During VAIN acquisition. Based on differential of VHOLD to VAIN. To charge CHOLD see Section 7.1.
			—	—	10	μA	During A/D Conversion cycle

* These parameters are characterized but not tested.

† Data in “Typ” column is at 5V, 25°C unless otherwise stated. These parameters are for design guidance only and are not tested.

Note 1: When A/D is off, it will not consume any current other than minor leakage current. The power-down current spec includes any such leakage from the A/D module.

2: VREF current is from RA3 pin or VDD pin, whichever is selected as reference input.

Applicable Devices	710	71	711	715

FIGURE 11-7: A/D CONVERSION TIMING

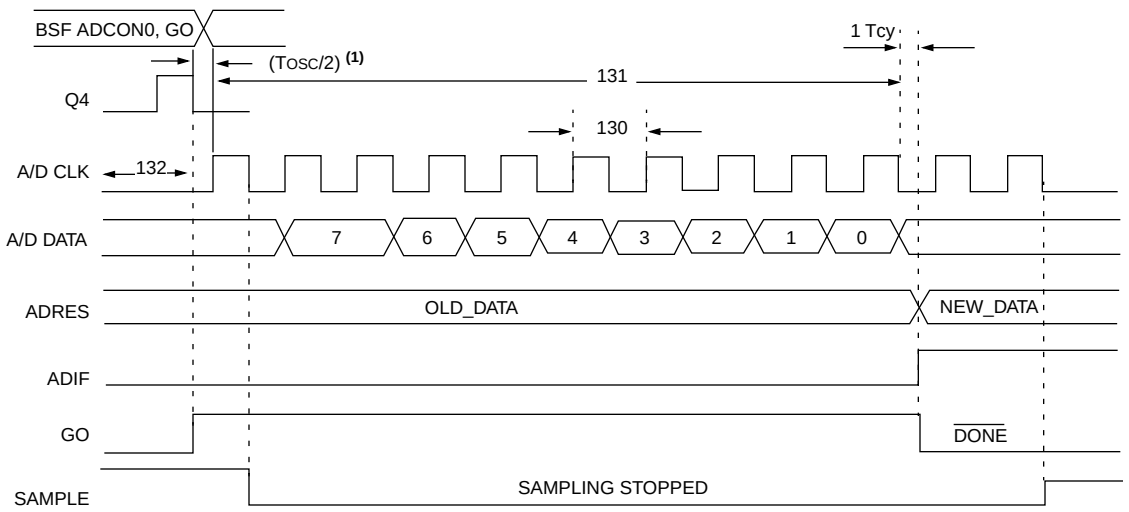

Note 1: If the A/D clock source is selected as RC, a time of TCY is added before the A/D clock starts. This allows the SLEEP instruction to be executed.

TABLE 11-7: A/D CONVERSION REQUIREMENTS

Param No.	Sym	Characteristic		Min	Typ†	Max	Units	Conditions
130	TAD	A/D clock period	PIC16**C**710/711	1.6	—	—	µs	TOSC based, VREF ≥ 3.0V
			PIC16**LC**710/711	2.0	—	—	µs	TOSC based, VREF full range
			PIC16**C**710/711	2.0*	4.0	6.0	µs	A/D RC mode
			PIC16**LC**710/711	3.0*	6.0	9.0	µs	A/D RC mode
131	TCNV	Conversion time (not including S/H time). (Note 1)		—	9.5	—	TAD	
132	TACQ	Acquisition time		Note 2	20	—	µs	
				5*	—	—	µs	The minimum time is the amplifier settling time. This may be used if the "new" input voltage has not changed by more than 1 LSb (i.e., 19.5 mV @ 5.12V) from the last sampled voltage (as stated on CHOLD).
134	TGO	Q4 to AD clock start		—	TOSC/2§	—	—	If the A/D clock source is selected as RC, a time of TCY is added before the A/D clock starts. This allows the SLEEP instruction to be executed.
135	TSWC	Switching from convert → sample time		1.5§	—	—	TAD	

* These parameters are characterized but not tested.

† Data in "Typ" column is at 5V, 25°C unless otherwise stated. These parameters are for design guidance only and are not tested.

§ This specification ensured by design.

Note 1: ADRES register may be read on the following TCY cycle.

2: See Section 7.1 for min conditions.

© 1997 Microchip Technology Inc.

Applicable Devices	710	71	711	715

12.0 DC AND AC CHARACTERISTICS GRAPHS AND TABLES FOR PIC16C710 AND PIC16C711

The graphs and tables provided in this section are for design guidance and are not tested or guaranteed.

In some graphs or tables the data presented are outside specified operating range (i.e., outside specified V_{DD} range). This is for information only and devices are guaranteed to operate properly only within the specified range.

Note:	The data presented in this section is a statistical summary of data collected on units from different lots over a period of time and matrix samples. 'Typical' represents the mean of the distribution at, 25°C, while 'max' or 'min' represents (mean +3σ) and (mean -3σ) respectively where σ is standard deviation.

FIGURE 12-1: TYPICAL I_{PD} vs. V_{DD} (WDT DISABLED, RC MODE)

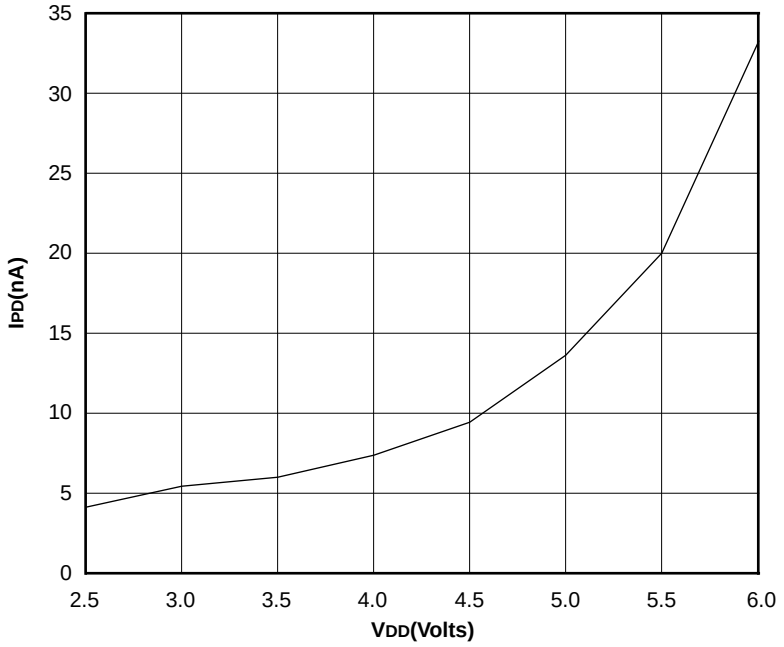

FIGURE 12-2: MAXIMUM I_{PD} vs. V_{DD} (WDT DISABLED, RC MODE)

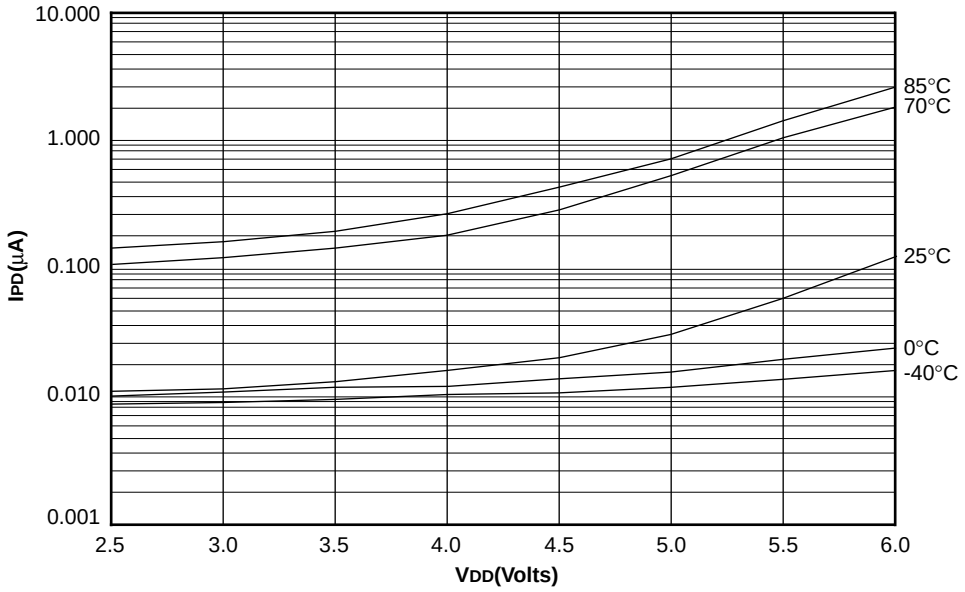

Applicable Devices	710	71	711	715

FIGURE 12-3: TYPICAL IPD vs. VDD @ 25°C (WDT ENABLED, RC MODE)

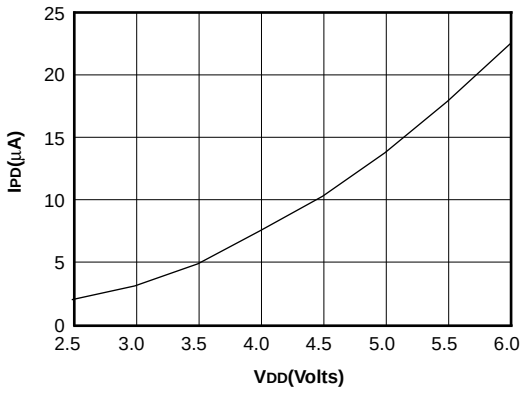

FIGURE 12-4: MAXIMUM IPD vs. VDD (WDT ENABLED, RC MODE)

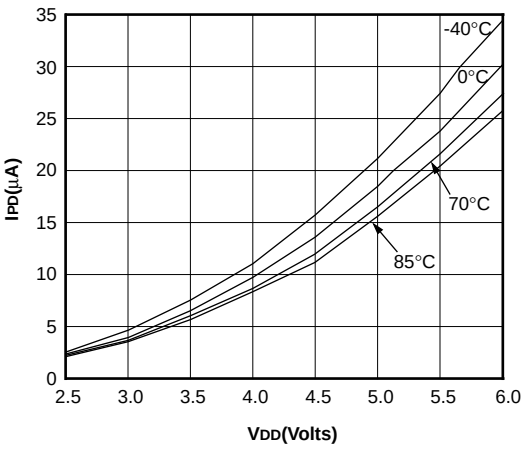

FIGURE 12-5: TYPICAL RC OSCILLATOR FREQUENCY vs. VDD

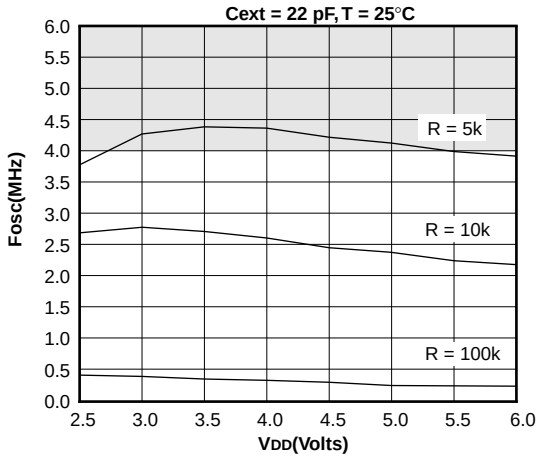

Shaded area is beyond recommended range.

FIGURE 12-6: TYPICAL RC OSCILLATOR FREQUENCY vs. VDD

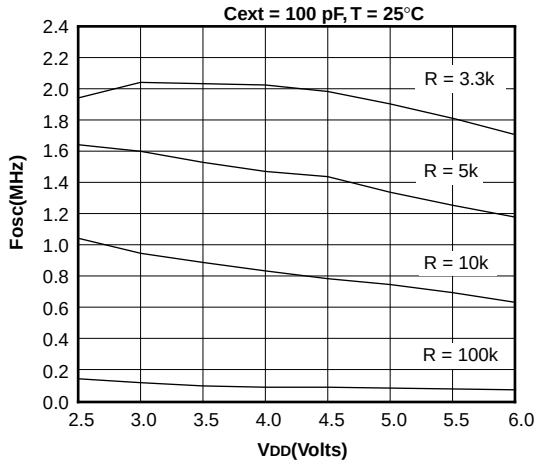

FIGURE 12-7: TYPICAL RC OSCILLATOR FREQUENCY vs. VDD

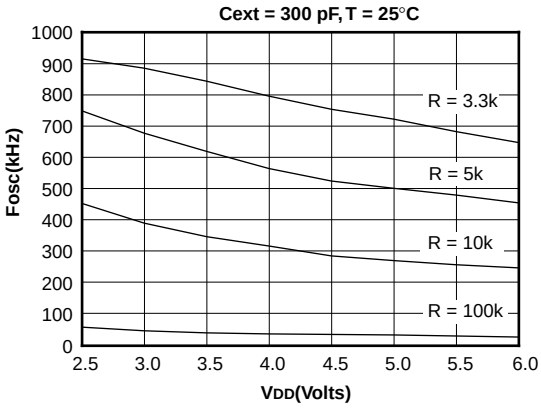

© 1997 Microchip Technology Inc.

Applicable Devices	710	71	711	715

FIGURE 12-8: TYPICAL IPD vs. VDD BROWN-OUT DETECT ENABLED (RC MODE)

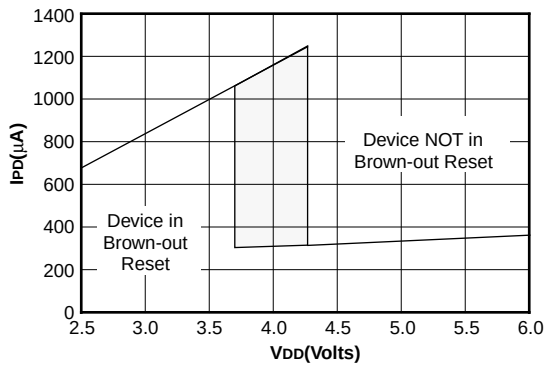

The shaded region represents the built-in hysteresis of the brown-out reset circuitry.

FIGURE 12-9: MAXIMUM IPD vs. VDD BROWN-OUT DETECT ENABLED (85°C TO -40°C, RC MODE)

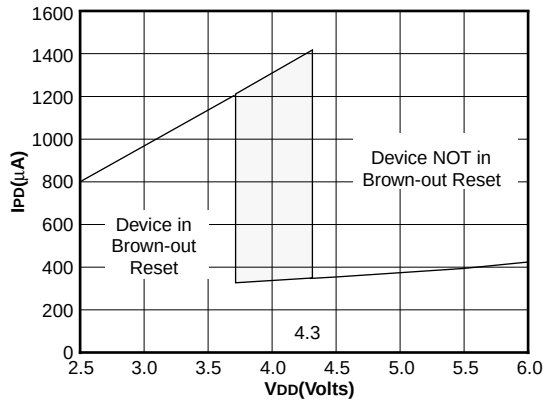

The shaded region represents the built-in hysteresis of the brown-out reset circuitry.

FIGURE 12-10: TYPICAL IPD vs. TIMER1 ENABLED (32 kHz, RC0/RC1 = 33 pF/33 pF, RC MODE)

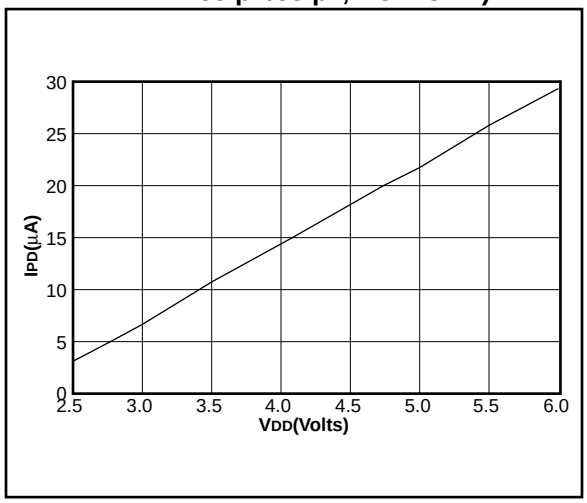

FIGURE 12-11: MAXIMUM IPD vs. TIMER1 ENABLED (32 kHz, RC0/RC1 = 33 pF/33 pF, 85°C TO -40°C, RC MODE)

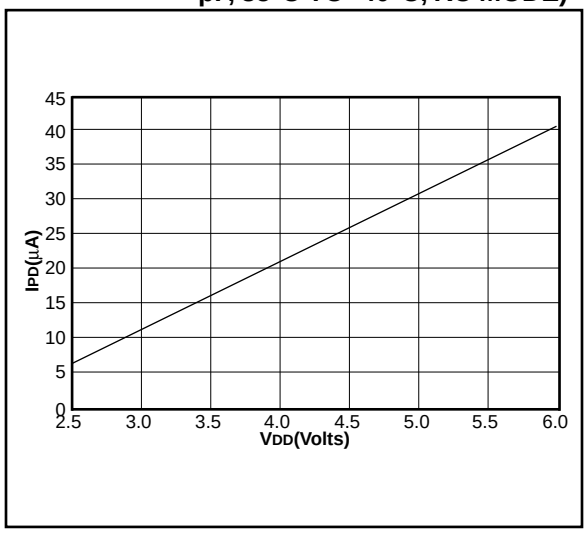

Applicable Devices	710	71	711	715

FIGURE 12-12: TYPICAL IDD vs. FREQUENCY (RC MODE @ 22 pF, 25°C)

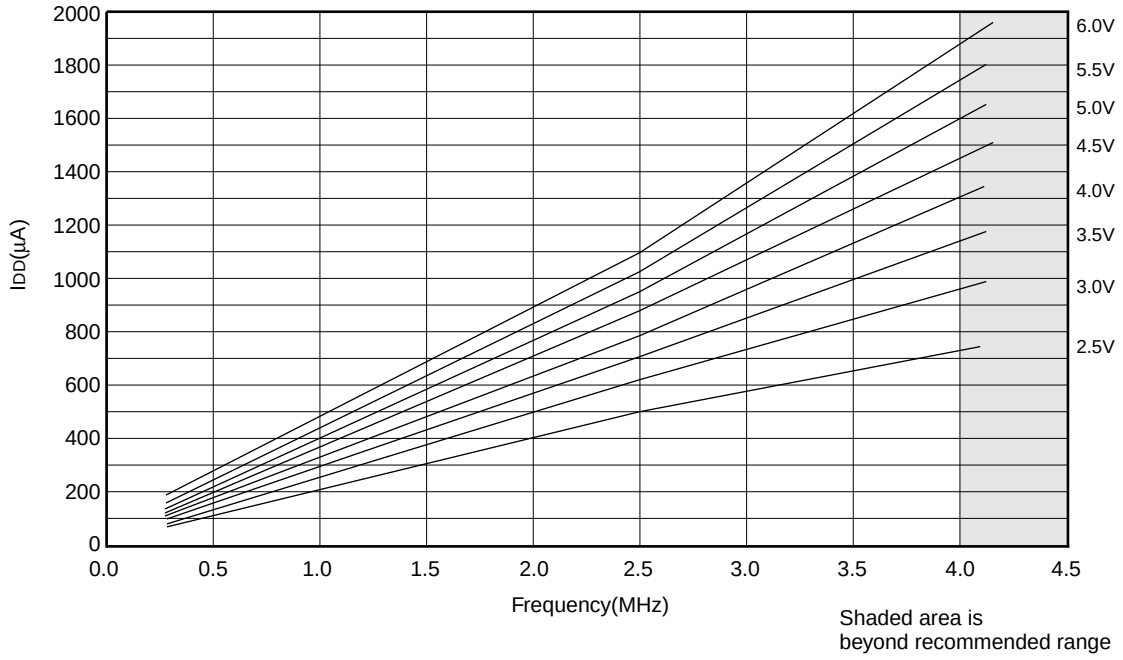

FIGURE 12-13: MAXIMUM IDD vs. FREQUENCY (RC MODE @ 22 pF, -40°C TO 85°C)

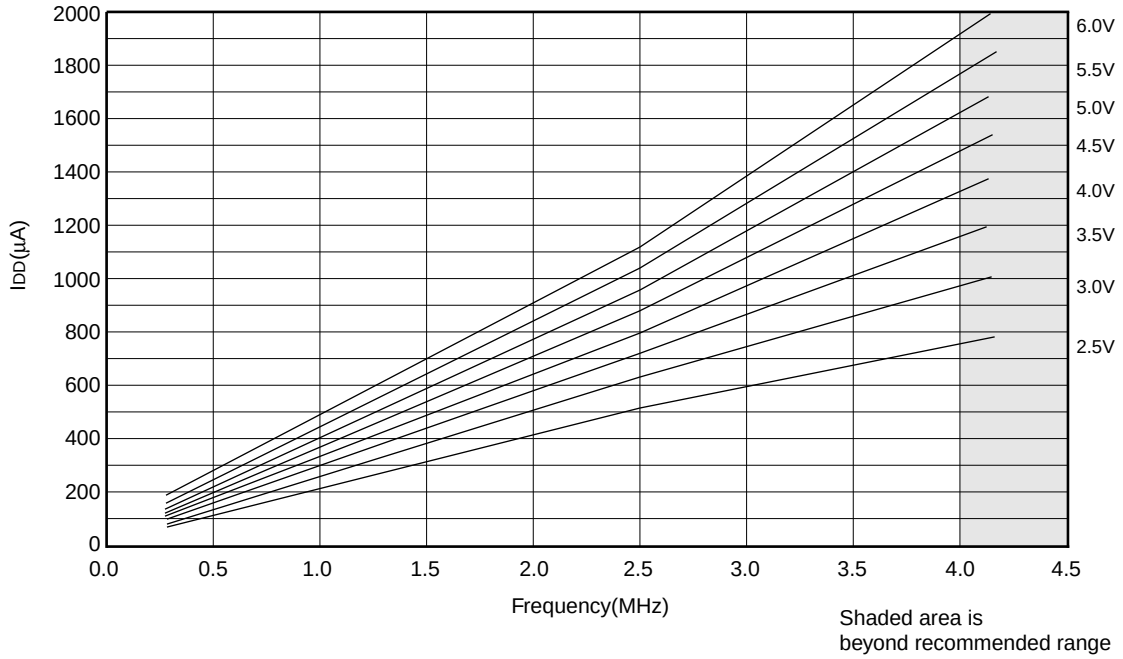

© 1997 Microchip Technology Inc.

Applicable Devices	710	71	711	715

FIGURE 12-14: TYPICAL IDD vs. FREQUENCY (RC MODE @ 100 pF, 25°C)

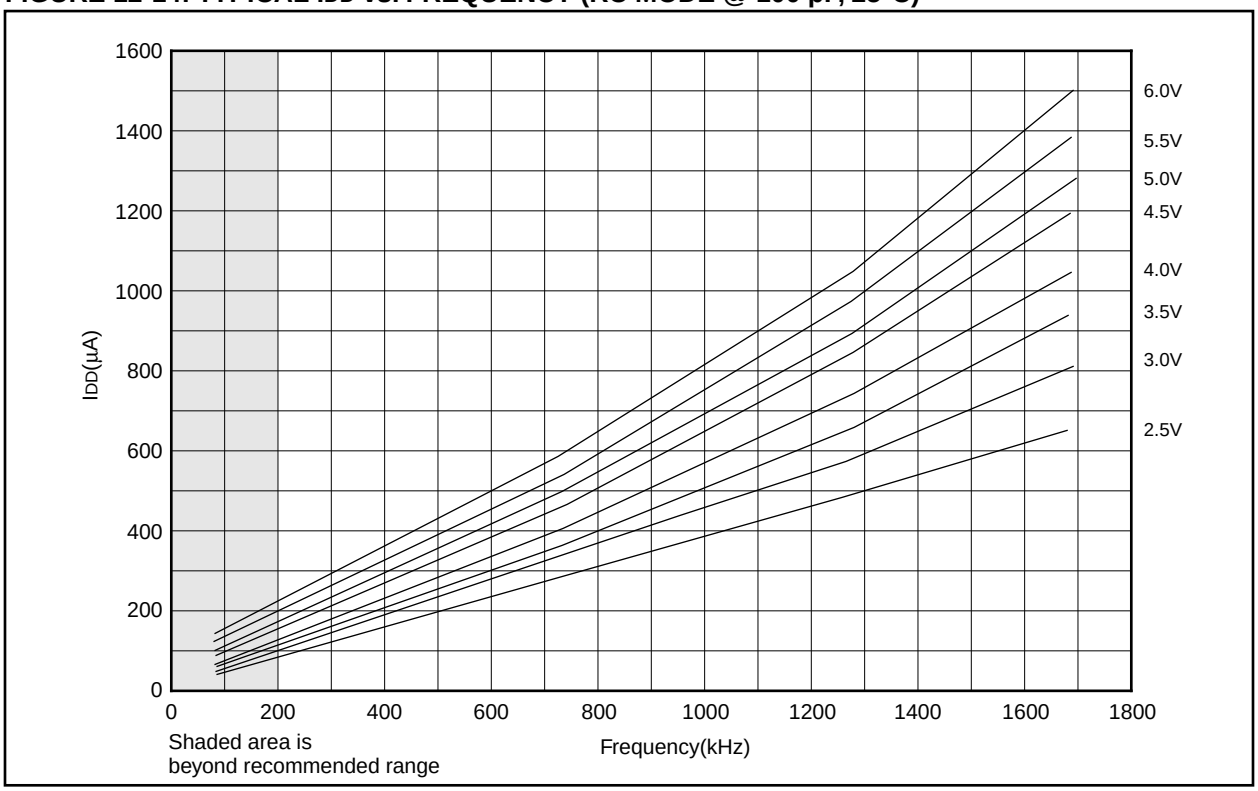

FIGURE 12-15: MAXIMUM IDD vs. FREQUENCY (RC MODE @ 100 pF, -40°C TO 85°C)

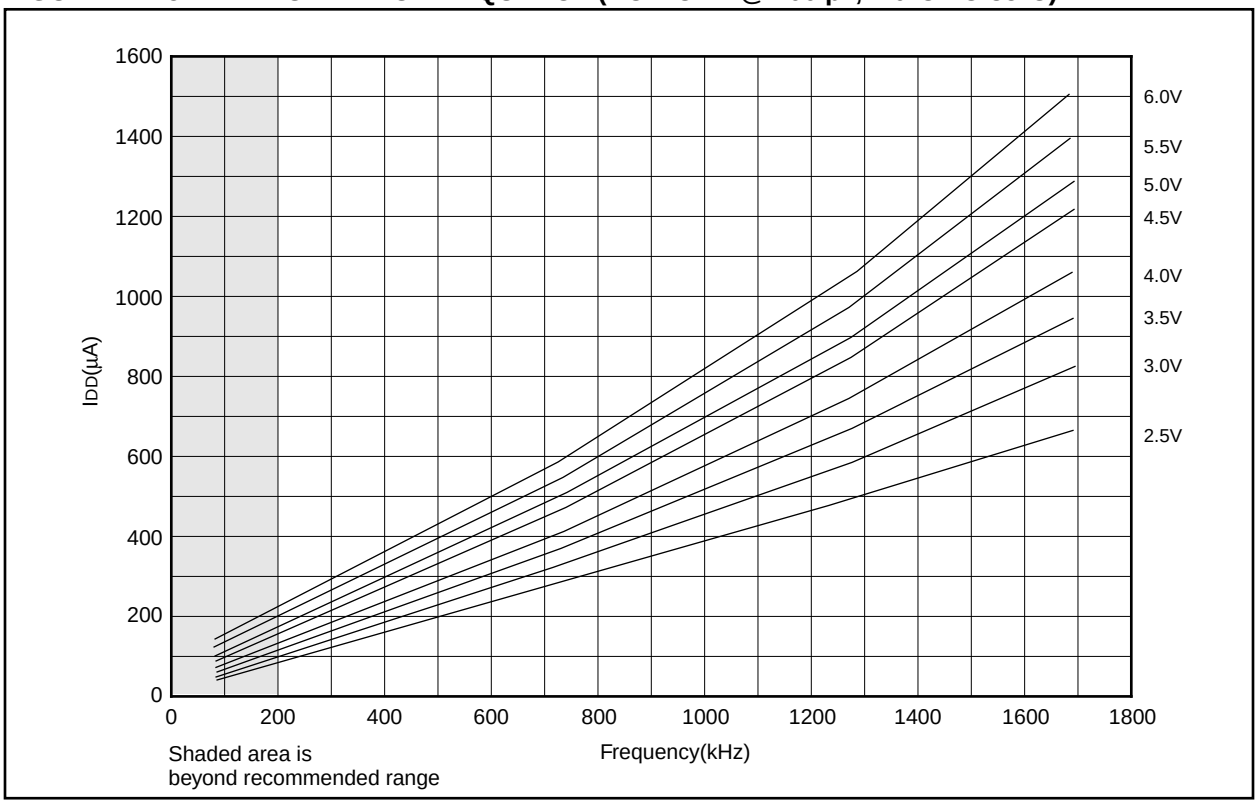

Applicable Devices	710	71	711	715

FIGURE 12-16: TYPICAL IDD vs. FREQUENCY (RC MODE @ 300 pF, 25°C)

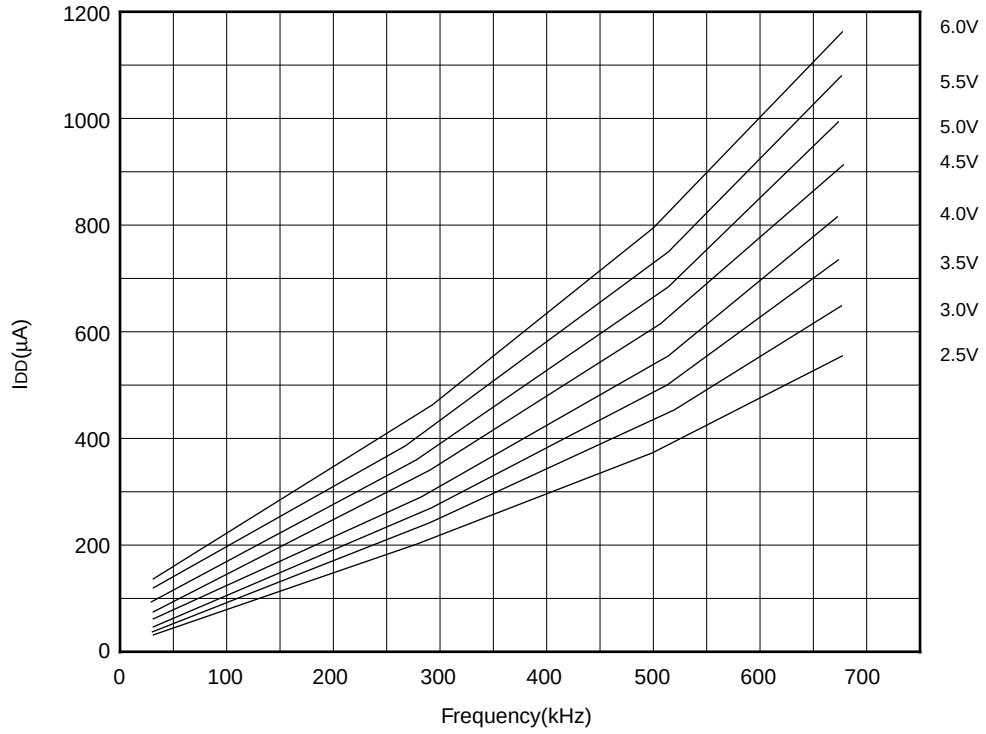

FIGURE 12-17: MAXIMUM IDD vs. FREQUENCY (RC MODE @ 300 pF, -40°C TO 85°C)

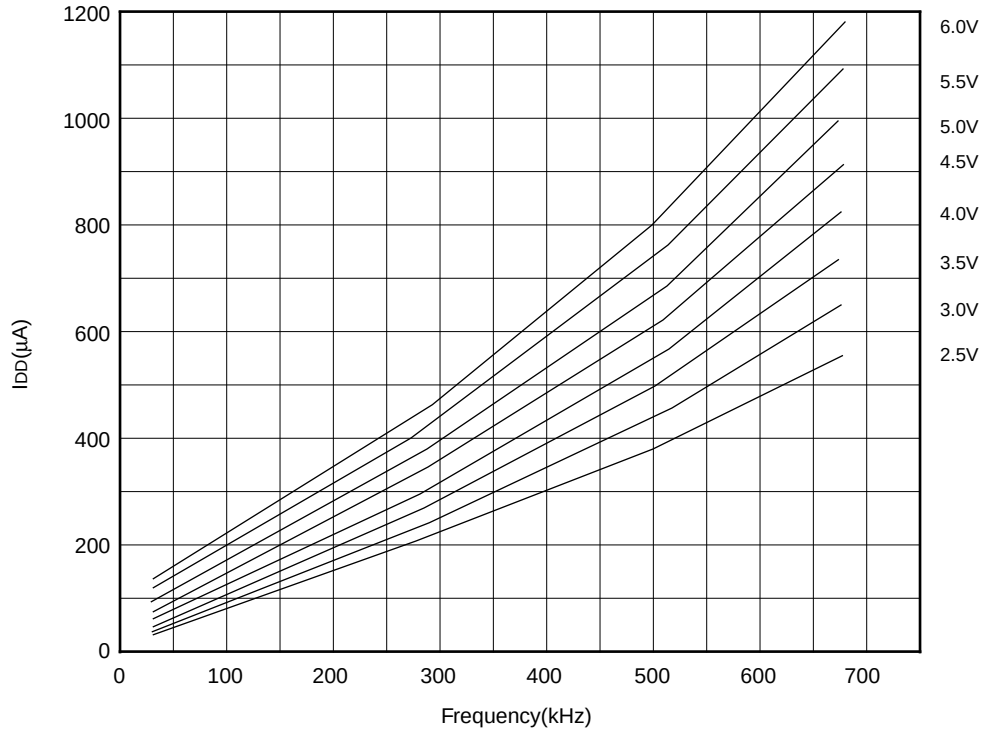

© 1997 Microchip Technology Inc.

Applicable Devices	710	71	711	715

FIGURE 12-18: TYPICAL IDD vs. CAPACITANCE @ 500 kHz (RC MODE)

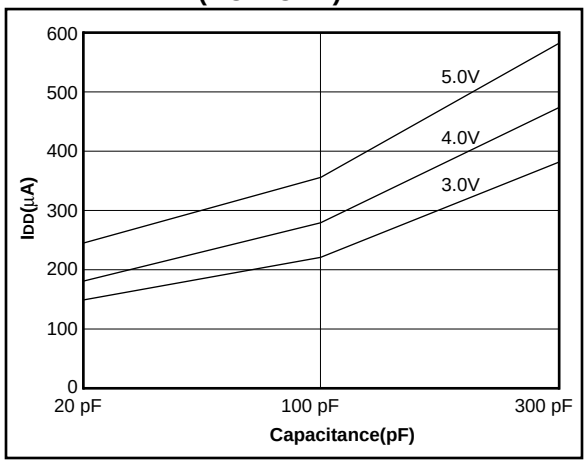

TABLE 12-1: RC OSCILLATOR FREQUENCIES

Cext	Rext	Average Fosc @ 5V, 25°C	
22 pF	5k	4.12 MHz	± 1.4%
	10k	2.35 MHz	± 1.4%
	100k	268 kHz	± 1.1%
100 pF	3.3k	1.80 MHz	± 1.0%
	5k	1.27 MHz	± 1.0%
	10k	688 kHz	± 1.2%
	100k	77.2 kHz	± 1.0%
300 pF	3.3k	707 kHz	± 1.4%
	5k	501 kHz	± 1.2%
	10k	269 kHz	± 1.6%
	100k	28.3 kHz	± 1.1%

The percentage variation indicated here is part to part variation due to normal process distribution. The variation indicated is ±3 standard deviation from average value for VDD = 5V.

FIGURE 12-19: TRANSCONDUCTANCE(gm) OF HS OSCILLATOR vs. VDD

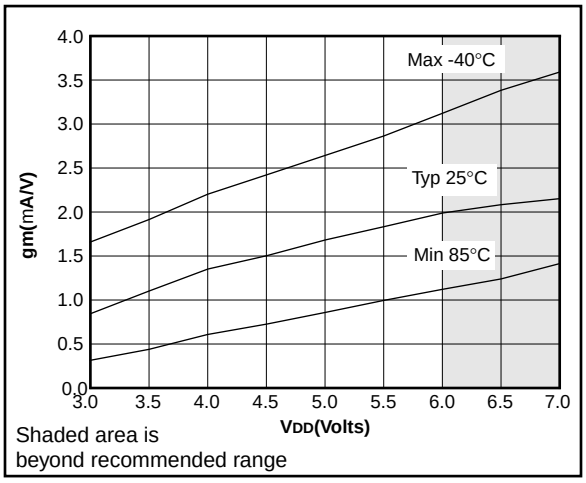

FIGURE 12-20: TRANSCONDUCTANCE(gm) OF LP OSCILLATOR vs. VDD

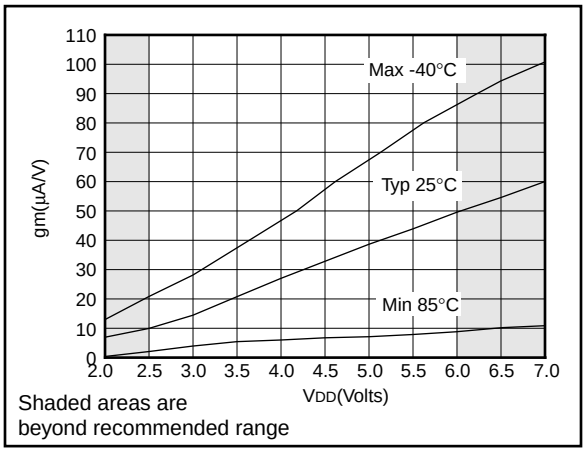

FIGURE 12-21: TRANSCONDUCTANCE(gm) OF XT OSCILLATOR vs. VDD

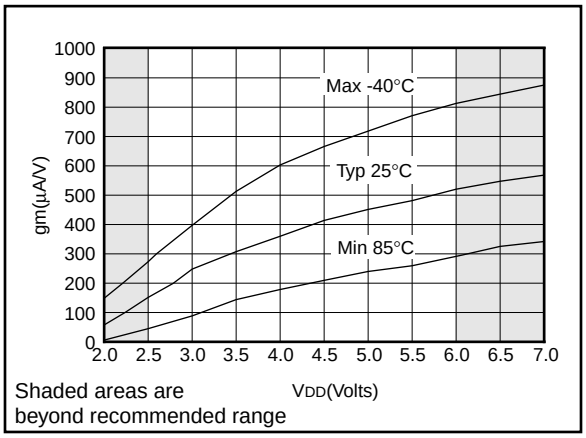

Applicable Devices	710	71	711	715

FIGURE 12-22: TYPICAL XTAL STARTUP TIME vs. VDD (LP MODE, 25°C)

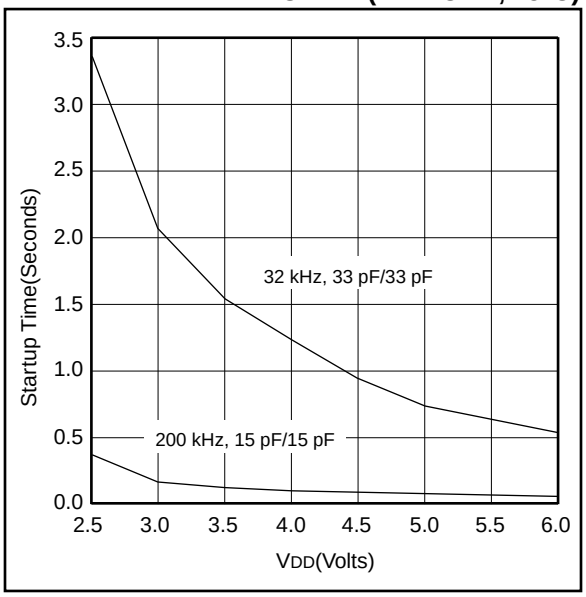

FIGURE 12-23: TYPICAL XTAL STARTUP TIME vs. VDD (HS MODE, 25°C)

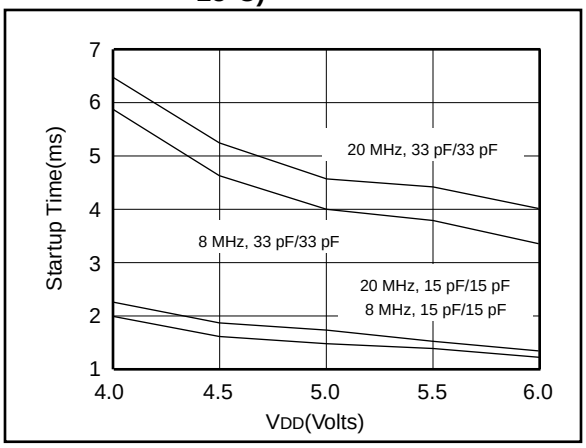

FIGURE 12-24: TYPICAL XTAL STARTUP TIME vs. VDD (XT MODE, 25°C)

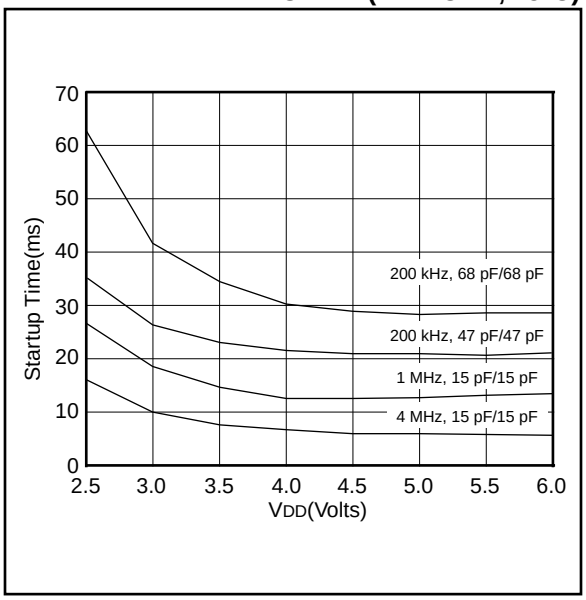

TABLE 12-2: CAPACITOR SELECTION FOR CRYSTAL OSCILLATORS

Osc Type	Crystal Freq	Cap. Range C1	Cap. Range C2
LP	32 kHz	33 pF	33 pF
	200 kHz	15 pF	15 pF
XT	200 kHz	47-68 pF	47-68 pF
	1 MHz	15 pF	15 pF
	4 MHz	15 pF	15 pF
HS	4 MHz	15 pF	15 pF
	8 MHz	15-33 pF	15-33 pF
	20 MHz	15-33 pF	15-33 pF
Crystals Used			
32 kHz	Epson C-001R32.768K-A		± 20 PPM
200 kHz	STD XTL 200.000KHz		± 20 PPM
1 MHz	ECS ECS-10-13-1		± 50 PPM
4 MHz	ECS ECS-40-20-1		± 50 PPM
8 MHz	EPSON CA-301 8.000M-C		± 30 PPM
20 MHz	EPSON CA-301 20.000M-C		± 30 PPM

© 1997 Microchip Technology Inc.

Applicable Devices	710	71	711	715

FIGURE 12-25: TYPICAL IDD vs. FREQUENCY (LP MODE, 25°C)

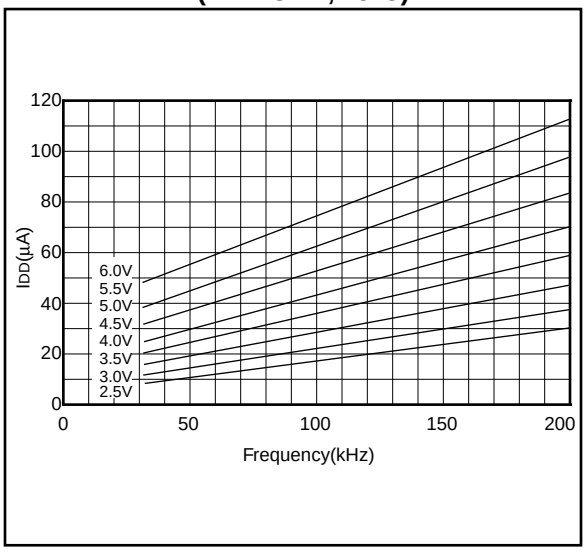

FIGURE 12-26: MAXIMUM IDD vs. FREQUENCY (LP MODE, 85°C TO -40°C)

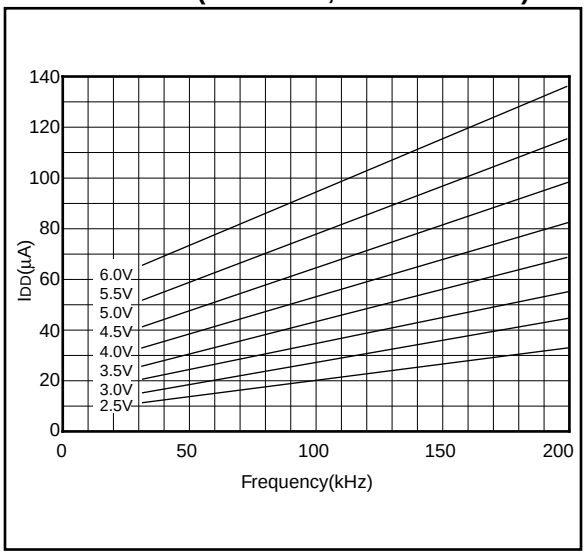

FIGURE 12-27: TYPICAL IDD vs. FREQUENCY (XT MODE, 25°C)

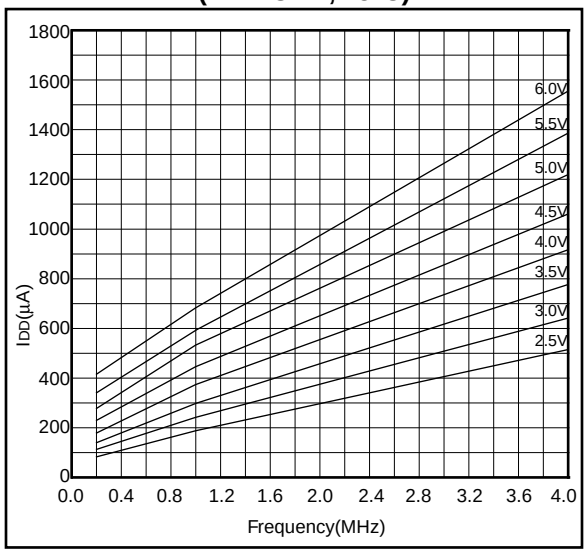

FIGURE 12-28: MAXIMUM IDD vs. FREQUENCY (XT MODE, -40°C TO 85°C)

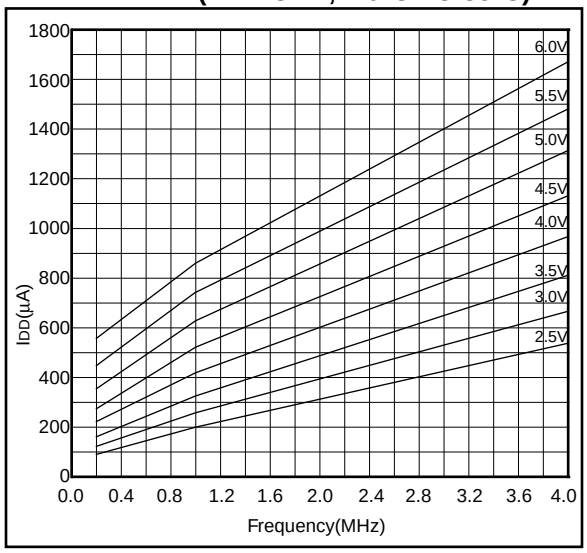

Applicable Devices	710	71	711	715

FIGURE 12-29: TYPICAL IDD vs. FREQUENCY (HS MODE, 25°C)

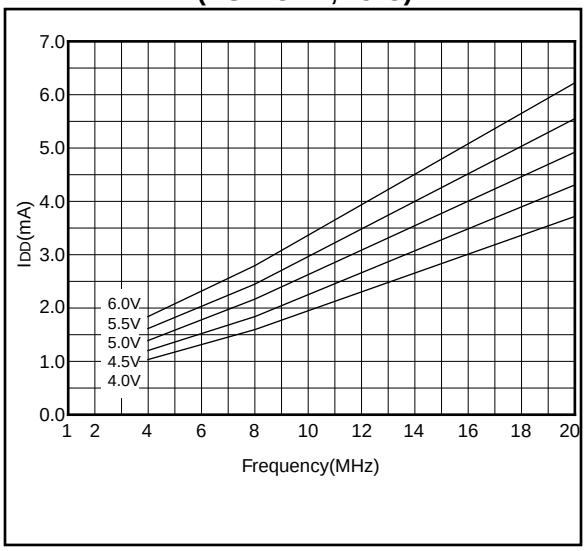

FIGURE 12-30: MAXIMUM IDD vs. FREQUENCY (HS MODE, -40°C TO 85°C)

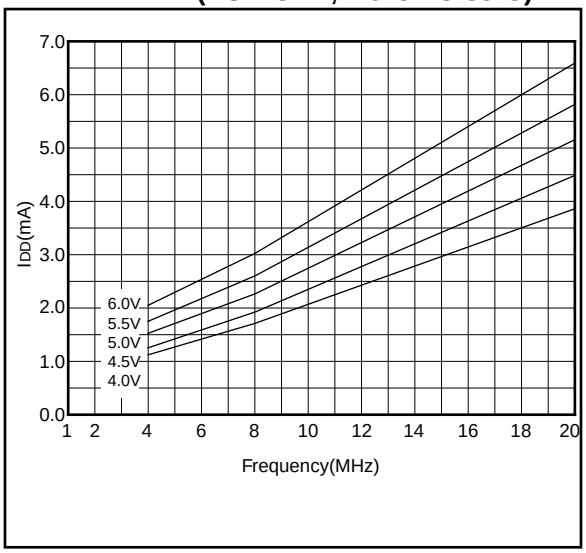

© 1997 Microchip Technology Inc.

Applicable Devices	710	71	711	715

13.0 ELECTRICAL CHARACTERISTICS FOR PIC16C715

Absolute Maximum Ratings †

Ambient temperature under bias ..... -55 to +125˚C
Storage temperature ..... -65˚C to +150˚C
Voltage on any pin with respect to V_{SS} (except V_{DD} and $\overline{MCLR}$) ..... -0.3V to (V_{DD} + 0.3V)
Voltage on V_{DD} with respect to V_{SS} ..... 0 to +7.5V
Voltage on $\overline{MCLR}$ with respect to V_{SS} ..... 0 to +14V
Voltage on RA4 with respect to Vss ..... 0 to +14V
Total power dissipation (Note 1) 1.0W
Maximum current out of V_{SS} pin ..... 300 mA
Maximum current into V_{DD} pin ..... 250 mA
Input clamp current, I_{IK} (V_I < 0 or V_I > V_{DD}) ..... ± 20 mA
Output clamp current, I_{OK} (V_O < 0 or V_O > V_{DD}) ..... ± 20 mA
Maximum output current sunk by any I/O pin ..... 25 mA
Maximum output current sourced by any I/O pin ..... 25 mA
Maximum current sunk by PORTA ..... 200 mA
Maximum current sourced by PORTA ..... 200 mA
Maximum current sunk by PORTB ..... 200 mA
Maximum current sourced by PORTB ..... 200 mA

Note 1: Power dissipation is calculated as follows: $P_{dis} = V_{DD} \times \{I_{DD} - \sum I_{OH}\} + \sum \{(V_{DD} - V_{OH}) \times I_{OH}\} + \sum(V_{Ol} \times I_{OL})$.

† NOTICE: Stresses above those listed under “Absolute Maximum Ratings” may cause permanent damage to the device. This is a stress rating only and functional operation of the device at those or any other conditions above those indicated in the operation listings of this specification is not implied. Exposure to maximum rating conditions for extended periods may affect device reliability.

PRELIMINARY

Applicable Devices	710	71	711	715

TABLE 13-1: CROSS REFERENCE OF DEVICE SPECS FOR OSCILLATOR CONFIGURATIONS AND FREQUENCIES OF OPERATION (COMMERCIAL DEVICES)

OSC	PIC16C715-04	PIC16C715-10	PIC16C715-20	PIC16LC715-04	PIC16C715/JW
RC	VDD: 4.0V to 5.5V IDD: 5 mA max. at 5.5V IPD: 21 µA max. at 4V Freq: 4 MHz max.	VDD: 4.5V to 5.5V IDD: 2.7 mA typ. at 5.5V IPD: 1.5 µA typ. at 4V Freq: 4 MHz max.	VDD: 4.5V to 5.5V IDD: 2.7 mA typ. at 5.5V IPD: 1.5 µA typ. at 4V Freq: 4 MHz max.	VDD: 2.5V to 5.5V IDD: 2.0 mA typ. at 3.0V IPD: 0.9 µA typ. at 3V Freq: 4 MHz max.	VDD: 4.0V to 5.5V IDD: 5 mA max. at 5.5V IPD: 21 µA max. at 4V Freq: 4 MHz max.
XT	VDD: 4.0V to 5.5V IDD: 5 mA max. at 5.5V IPD: 21 µA max. at 4V Freq: 4 MHz max.	VDD: 4.5V to 5.5V IDD: 2.7 mA typ. at 5.5V IPD: 1.5 µA typ. at 4V Freq: 4 MHz max.	VDD: 4.5V to 5.5V IDD: 2.7 mA typ. at 5.5V IPD: 1.5 µA typ. at 4V Freq: 4 MHz max.	VDD: 2.5V to 5.5V IDD: 2.0 mA typ. at 3.0V IPD: 0.9 µA typ. at 3V Freq: 4 MHz max.	VDD: 4.0V to 5.5V IDD: 5 mA max. at 5.5V IPD: 21 µA max. at 4V Freq: 4 MHz max.
HS	VDD: 4.5V to 5.5V IDD: 13.5 mA typ. at 5.5V IPD: 1.5 µA typ. at 4.5V Freq: 4 MHz max.	VDD: 4.5V to 5.5V IDD: 30 mA max. at 5.5V IPD: 1.5 µA typ. at 4.5V Freq: 10 MHz max.	VDD: 4.5V to 5.5V IDD: 30 mA max. at 5.5V IPD: 1.5 µA typ. at 4.5V Freq: 20 MHz max.	Do not use in HS mode	VDD: 4.5V to 5.5V IDD: 30 mA max. at 5.5V IPD: 1.5 µA typ. at 4.5V Freq: 10 MHz max.
LP	VDD: 4.0V to 5.5V IDD: 52.5 µA typ. at 32 kHz, 4.0V IPD: 0.9 µA typ. at 4.0V Freq: 200 kHz max.	Do not use in LP mode	Do not use in LP mode	VDD: 2.5V to 5.5V IDD: 48 µA max. at 32 kHz, 3.0V IPD: 5.0 µA max. at 3.0V Freq: 200 kHz max.	VDD: 2.5V to 5.5V IDD: 48 µA max. at 32 kHz, 3.0V IPD: 5.0 µA max. at 3.0V Freq: 200 kHz max.

The shaded sections indicate oscillator selections which are tested for functionality, but not for MIN/MAX specifications. It is recommended that the user select the device type that ensures the specifications required.

PRELIMINARY

© 1997 Microchip Technology Inc.

Applicable Devices	710	71	711	715

13.1 DC Characteristics: PIC16C715-04 (Commercial, Industrial, Extended) PIC16C715-10 (Commercial, Industrial, Extended) PIC16C715-20 (Commercial, Industrial, Extended))

DC CHARACTERISTICS			Standard Operating Conditions (unless otherwise stated) Operating temperature 0˚C ≤ TA ≤ +70˚C (commercial) -40˚C ≤ TA ≤ +85˚C (industrial) -40˚C ≤ TA ≤ +125˚C (extended)				
Param. No.	**Characteristic**	**Sym**	**Min**	**Typ†**	**Max**	**Units**	**Conditions**
D001	Supply Voltage	VDD	4.0	-	5.5	V	XT, RC and LP osc configuration
D001A			4.5	-	5.5	V	HS osc configuration
D002*	RAM Data Retention Voltage (Note 1)	VDR	-	1.5	-	V	Device in SLEEP mode
D003	VDD start voltage to ensure internal Power-on Reset signal	VPOR	-	VSS	-	V	See section on Power-on Reset for details
D004*	VDD rise rate to ensure internal Power-on Reset signal	SVDD	0.05	-	-	V/ms	See section on Power-on Reset for details
D005	Brown-out Reset Voltage	BVDD	3.7	4.0	4.3	V	BODEN configuration bit is enabled
D010	Supply Current (Note 2)	IDD	-	2.7	5	mA	XT, RC osc configuration (PIC16C715-04) FOSC = 4 MHz, VDD = 5.5V (Note 4)
D013			-	13.5	30	mA	HS osc configuration (PIC16C715-20) FOSC = 20 MHz, VDD = 5.5V
D015	Brown-out Reset Current (Note 5)	ΔIBOR	-	300*	500	μA	BOR enabled VDD = 5.0V
D020	Power-down Current (Note 3)	IPD	-	10.5	42	μA	VDD = 4.0V, WDT enabled, -40°C to +85°C
D021			-	1.5	21	μA	VDD = 4.0V, WDT disabled, -0°C to +70°C
D021A			-	1.5	24	μA	VDD = 4.0V, WDT disabled, -40°C to +85°C
D021B			-	1.5	30	μA	VDD = 4.0V, WDT disabled, -40°C to +125°C
D023	Brown-out Reset Current (Note 5)	ΔIBOR	-	300*	500	μA	BOR enabled VDD = 5.0V

* These parameters are characterized but not tested.

† Data in "Typ" column is at 5V, 25˚C unless otherwise stated. These parameters are for design guidance only and are not tested.

Note 1: This is the limit to which VDD can be lowered in SLEEP mode without losing RAM data.

2: The supply current is mainly a function of the operating voltage and frequency. Other factors such as I/O pin loading and switching rate, oscillator type, internal code execution pattern, and temperature also have an impact on the current consumption.
The test conditions for all IDD measurements in active operation mode are:
OSC1 = external square wave, from rail to rail; all I/O pins tristated, pulled to VDD
$\overline{MCLR}$ = VDD; WDT enabled/disabled as specified.

3: The power-down current in SLEEP mode does not depend on the oscillator type. Power-down current is measured with the part in SLEEP mode, with all I/O pins in hi-impedance state and tied to VDD and VSS.

4: For RC osc configuration, current through Rext is not included. The current through the resistor can be estimated by the formula Ir = VDD/2Rext (mA) with Rext in kOhm.

5: The Δ current is the additional current consumed when this peripheral is enabled. This current should be added to the base IDD or IPD measurement.

PRELIMINARY

Applicable Devices	710	71	711	715

13.2 DC Characteristics: PIC16LC715-04 (Commercial, Industrial)

DC CHARACTERISTICS							Standard Operating Conditions (unless otherwise stated) Operating temperature 0˚C ≤ TA ≤ +70˚C (commercial) -40˚C ≤ TA ≤ +85˚C (industrial)
Param No.	**Characteristic**	**Sym**	**Min**	**Typ†**	**Max**	**Units**	**Conditions**
D001	Supply Voltage	VDD	2.5	-	5.5	V	LP, XT, RC osc configuration (DC - 4 MHz)
D002*	RAM Data Retention Voltage (Note 1)	VDR	-	1.5	-	V	Device in SLEEP mode
D003	VDD start voltage to ensure internal Power-on Reset signal	VPOR	-	VSS	-	V	See section on Power-on Reset for details
D004*	VDD rise rate to ensure internal Power-on Reset signal	SVDD	0.05	-	-	V/ms	See section on Power-on Reset for details
D005	Brown-out Reset Voltage	BVDD	3.7	4.0	4.3	V	BODEN configuration bit is enabled
D010	Supply Current (Note 2)	IDD	-	2.0	3.8	mA	XT, RC osc configuration FOSC = 4 MHz, VDD = 3.0V (Note 4)
D010A			-	22.5	48	µA	LP osc configuration FOSC = 32 kHz, VDD = 3.0V, WDT disabled
D015	Brown-out Reset Current (Note 5)	ΔIBOR	-	300*	500	µA	BOR enabled VDD = 5.0V
D020	Power-down Current (Note 3)	IPD	-	7.5	30	µA	VDD = 3.0V, WDT enabled, -40°C to +85°C
D021			-	0.9	5	µA	VDD = 3.0V, WDT disabled, 0°C to +70°C
D021A			-	0.9	5	µA	VDD = 3.0V, WDT disabled, -40°C to +85°C
D023	Brown-out Reset Current (Note 5)	ΔIBOR	-	300*	500	µA	BOR enabled VDD = 5.0V

* These parameters are characterized but not tested.

† Data in "Typ" column is at 5V, 25˚C unless otherwise stated. These parameters are for design guidance only and are not tested.

Note 1: This is the limit to which VDD can be lowered in SLEEP mode without losing RAM data.

2: The supply current is mainly a function of the operating voltage and frequency. Other factors such as I/O pin loading and switching rate, oscillator type, internal code execution pattern, and temperature also have an impact on the current consumption.
The test conditions for all IDD measurements in active operation mode are:
OSC1 = external square wave, from rail to rail; all I/O pins tristated, pulled to VDD
$\overline{\text{MCLR}}$ = VDD; WDT enabled/disabled as specified.

3: The power-down current in SLEEP mode does not depend on the oscillator type. Power-down current is measured with the part in SLEEP mode, with all I/O pins in hi-impedance state and tied to VDD and VSS.

4: For RC osc configuration, current through Rext is not included. The current through the resistor can be estimated by the formula Ir = VDD/2Rext (mA) with Rext in kOhm.

5: The Δ current is the additional current consumed when this peripheral is enabled. This current should be added to the base IDD or IPD measurement.

PRELIMINARY

© 1997 Microchip Technology Inc.

Applicable Devices	710	71	711	715

13.3 DC Characteristics: PIC16C715-04 (Commercial, Industrial, Extended) PIC16C715-10 (Commercial, Industrial, Extended) PIC16C715-20 (Commercial, Industrial, Extended) PIC16LC715-04 (Commercial, Industrial))

DC CHARACTERISTICS							**Standard Operating Conditions (unless otherwise stated)** Operating temperature 0˚C ≤ TA ≤ +70˚C (commercial) -40˚C ≤ TA ≤ +85˚C (industrial) -40˚C ≤ TA ≤ +125˚C (extended) Operating voltage VDD range as described in DC spec Section 13.1 and Section 13.2.
Param No.	**Characteristic**	**Sym**	**Min**	**Typ †**	**Max**	**Units**	**Conditions**
	Input Low Voltage						
	I/O ports	VIL					
D030	with TTL buffer		VSS	-	0.5V	V	
D031	with Schmitt Trigger buffer		VSS	-	0.2VDD	V	
D032	$\overline{\text{MCLR}}$, RA4/T0CKI,OSC1 (in RC mode)		VSS	-	0.2VDD	V	
D033	OSC1 (in XT, HS and LP)		VSS	-	0.3VDD	V	Note1
	Input High Voltage						
	I/O ports	VIH		-			
D040	with TTL buffer		2.0	-	VDD	V	4.5 ≤ VDD ≤ 5.5V
D040A			0.8VDD	-	VDD	V	For VDD > 5.5V or VDD < 4.5V
D041	with Schmitt Trigger buffer		0.8VDD	-	VDD	V	For entire VDD range
D042	$\overline{\text{MCLR}}$, RA4/T0CKI RB0/INT		0.8VDD	-	VDD	V	
D042A	OSC1 (XT, HS and LP)		0.7VDD	-	VDD	V	Note1
D043	OSC1 (in RC mode)		0.9VDD	-	VDD	V	
D070	PORTB weak pull-up current	IPURB	50	250	400	μA	VDD = 5V, VPIN = VSS
	Input Leakage Current (Notes 2, 3)						
D060	I/O ports	IIL	-	-	±1	μA	Vss ≤ VPIN ≤ VDD, Pin at hi-impedance
D061	$\overline{\text{MCLR}}$, RA4/T0CKI		-	-	±5	μA	Vss ≤ VPIN ≤ VDD
D063	OSC1		-	-	±5	μA	Vss ≤ VPIN ≤ VDD, XT, HS and LP osc configuration
	Output Low Voltage						
D080	I/O ports	VOL	-	-	0.6	V	IOL = 8.5 mA, VDD = 4.5V, -40°C to +85°C
D080A			-	-	0.6	V	IOL = 7.0 mA, VDD = 4.5V, -40°C to +125°C
D083	OSC2/CLKOUT (RC osc config)		-	-	0.6	V	IOL = 1.6 mA, VDD = 4.5V, -40°C to +85°C
D083A			-	-	0.6	V	IOL = 1.2 mA, VDD = 4.5V, -40°C to +125°C

† Data in "Typ" column is at 5V, 25°C unless otherwise stated. These parameters are for design guidance only and are not tested.

Note 1: In RC oscillator configuration, the OSC1/CLKIN pin is a Schmitt Trigger input. It is not recommended that the PIC16C7X be driven with external clock in RC mode.

2: The leakage current on the $\overline{\text{MCLR}}$ pin is strongly dependent on the applied voltage level. The specified levels represent normal operating conditions. Higher leakage current may be measured at different input voltages.

3: Negative current is defined as coming out of the pin.

PRELIMINARY

Applicable Devices	710	71	711	715

DC CHARACTERISTICS							
		Standard Operating Conditions (unless otherwise stated) Operating temperature 0˚C ≤ TA ≤ +70˚C (commercial) -40˚C ≤ TA ≤ +85˚C (industrial) -40˚C ≤ TA ≤ +125˚C (extended) Operating voltage VDD range as described in DC spec Section 13.1 and Section 13.2.					
Param No.	**Characteristic**	**Sym**	**Min**	**Typ †**	**Max**	**Units**	**Conditions**
	Output High Voltage						
D090	I/O ports (Note 3)	VOH	VDD - 0.7	-	-	V	IOH = -3.0 mA, VDD = 4.5V, -40°C to +85°C
D090A			VDD - 0.7	-	-	V	IOH = -2.5 mA, VDD = 4.5V, -40°C to +125°C
D092	OSC2/CLKOUT (RC osc config)		VDD - 0.7	-	-	V	IOH = -1.3 mA, VDD = 4.5V, -40°C to +85°C
D092A			VDD - 0.7	-	-	V	IOH = -1.0 mA, VDD = 4.5V, -40°C to +125°C
	Capacitive Loading Specs on Output Pins						
D100	OSC2 pin	COSC2	-	-	15	pF	In XT, HS and LP modes when external clock is used to drive OSC1.
D101	All I/O pins and OSC2 (in RC mode)	CIO	-	-	50	pF	

† Data in “Typ” column is at 5V, 25°C unless otherwise stated. These parameters are for design guidance only and are not tested.

Note 1: In RC oscillator configuration, the OSC1/CLKIN pin is a Schmitt Trigger input. It is not recommended that the PIC16C7X be driven with external clock in RC mode.

2: The leakage current on the $\overline{\text{MCLR}}$ pin is strongly dependent on the applied voltage level. The specified levels represent normal operating conditions. Higher leakage current may be measured at different input voltages.

3: Negative current is defined as coming out of the pin.

PRELIMINARY

© 1997 Microchip Technology Inc.

Applicable Devices	710	71	711	715

13.4 Timing Parameter Symbology

The timing parameter symbols have been created following one of the following formats:

1. TppS2ppS
2. TppS

T			
F	Frequency	T	Time

Lowercase letters (pp) and their meanings:

pp			
cc	CCP1	osc	OSC1
ck	CLKOUT	rd	$\overline{RD}$
cs	$\overline{CS}$	rw	$\overline{RD}$ or $\overline{WR}$
di	SDI	sc	SCK
do	SDO	ss	$\overline{SS}$
dt	Data in	t0	T0CKI
io	I/O port	t1	T1CKI
mc	$\overline{MCLR}$	wr	$\overline{WR}$

Uppercase letters and their meanings:

S			
F	Fall	P	Period
H	High	R	Rise
I	Invalid (Hi-impedance)	V	Valid
L	Low	Z	Hi-impedance

FIGURE 13-1: LOAD CONDITIONS

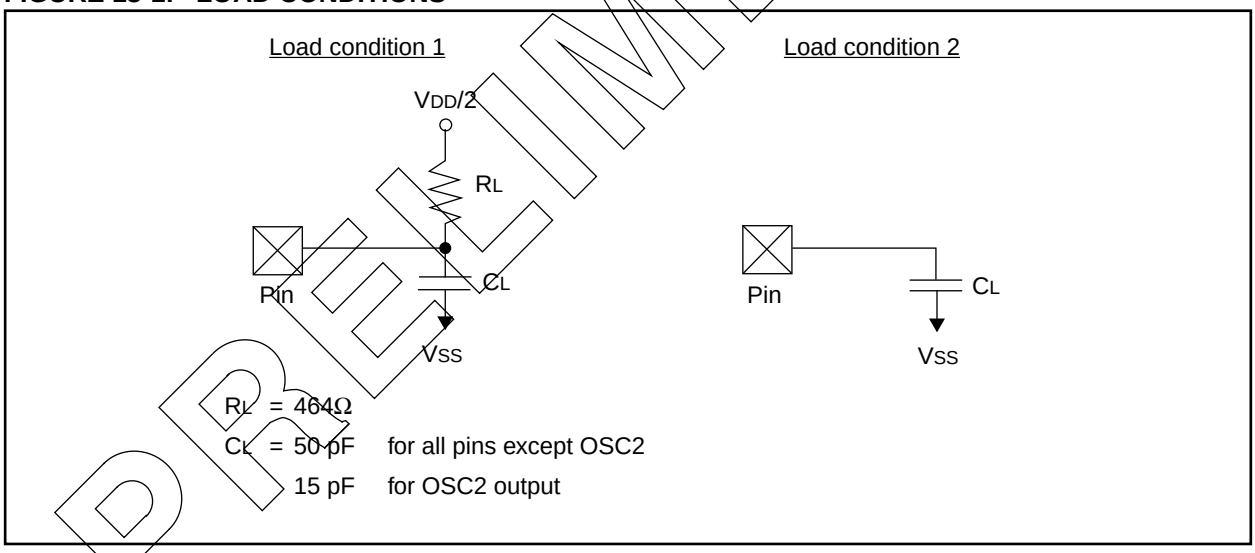

PRELIMINARY

Applicable Devices	710	71	711	715

13.5 Timing Diagrams and Specifications

FIGURE 13-2: EXTERNAL CLOCK TIMING

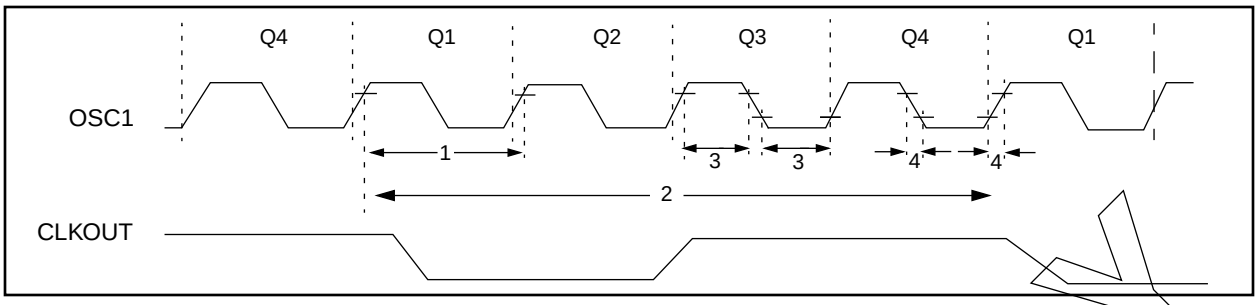

TABLE 13-2: CLOCK TIMING REQUIREMENTS

Parameter No.	Sym	Characteristic	Min	Typ†	Max	Units	Conditions
	Fos	**External CLKIN Frequency (Note 1)**	DC	—	4	MHz	XT osc mode
			DC	—	4	MHz	HS osc mode (PIC16C715-04)
			DC	—	20	MHz	HS osc mode (PIC16C715-20)
			DC	—	200	kHz	LP osc mode
		Oscillator Frequency (Note 1)	DC	—	4	MHz	RC osc mode
			0.1	—	4	MHz	XT osc mode
			4	—	4	MHz	HS osc mode (PIC16C715-04)
			4	—	10	MHz	HS osc mode (PIC16C715-10)
			4	—	20	MHz	HS osc mode (PIC16C715-20)
			5	—	200	kHz	LP osc mode
1	Tosc	**External CLKIN Period (Note 1)**	250	—	—	ns	XT osc mode
			250	—	—	ns	HS osc mode (PIC16C715-04)
			100	—	—	ns	HS osc mode (PIC16C715-10)
			50	—	—	ns	HS osc mode (PIC16C715-20)
			5	—	—	µs	LP osc mode
		Oscillator Period (Note 1)	250	—	—	ns	RC osc mode
			250	—	10,000	ns	XT osc mode
			250	—	250	ns	HS osc mode (PIC16C715-04)
			100	—	250	ns	HS osc mode (PIC16C715-10)
			50	—	250	ns	HS osc mode (PIC16C715-20)
			5	—	—	µs	LP osc mode
2	TCY	**Instruction Cycle Time (Note 1)**	200	—	DC	ns	TCY = 4/FOSC
3	TosL, TosH	**External Clock in (OSC1) High or Low Time**	50	—	—	ns	XT oscillator
			2.5	—	—	µs	LP oscillator
			10	—	—	ns	HS oscillator
4	TosR, TosF	**External Clock in (OSC1) Rise or Fall Time**	—	—	25	ns	XT oscillator
			—	—	50	ns	LP oscillator
			—	—	15	ns	HS oscillator

† Data in "Typ" column is at 5V, 25˚C unless otherwise stated. These parameters are for design guidance only and are not tested.

Note 1: Instruction cycle period (TCY) equals four times the input oscillator time-base period. All specified values are based on characterization data for that particular oscillator type under standard operating conditions with the device executing code. Exceeding these specified limits may result in an unstable oscillator operation and/or higher than expected current consumption. All devices are tested to operate at "min." values with an external clock applied to the OSC1/CLKIN pin. When an external clock input is used, the "Max." cycle time limit is "DC" (no clock) for all devices. OSC2 is disconnected (has no loading) for the PIC16C715.

PRELIMINARY

© 1997 Microchip Technology Inc.

Applicable Devices	710	71	711	715

FIGURE 13-3: CLKOUT AND I/O TIMING

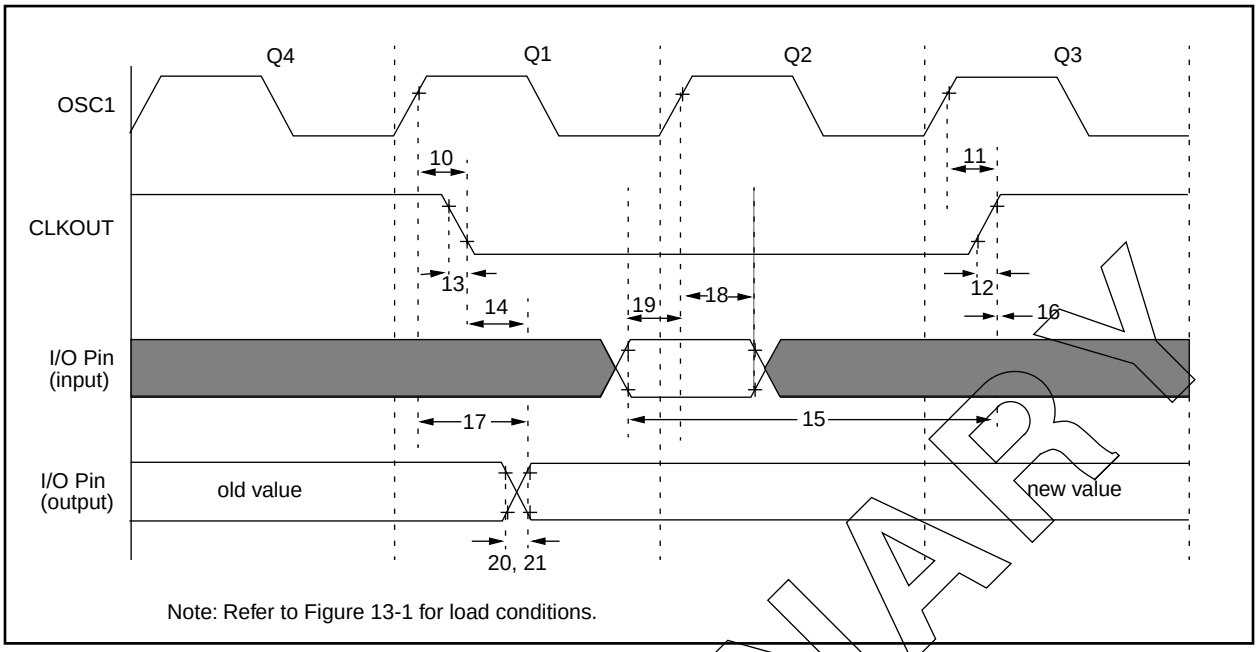

TABLE 13-3: CLKOUT AND I/O TIMING REQUIREMENTS

Parameter No.	Sym	Characteristic		Min	Typ†	Max	Units	Conditions
10*	TosH2ckL	OSC1↑ to CLKOUT↓		—	15	30	ns	Note 1
11*	TosH2ckH	OSC1↑ to CLKOUT↑		—	15	30	ns	Note 1
12*	TckR	CLKOUT rise time		—	5	15	ns	Note 1
13*	TckF	CLKOUT fall time		—	5	15	ns	Note 1
14*	TckL2ioV	CLKOUT ↓ to Port out valid		—	—	0.5TCY + 20	ns	Note 1
15*	TioV2ckH	Port in valid before CLKOUT ↑		0.25TCY + 25	—	—	ns	Note 1
16*	TckH2ioI	Port in hold after CLKOUT ↑		0	—	—	ns	Note 1
17*	TosH2ioV	OSC1↑ (Q1 cycle) to Port out valid		—	—	80 - 100	ns	
18*	TosH2ioI	OSC1↑ (Q2 cycle) to Port input invalid (I/O in hold time)		TBD	—	—	ns	
19*	TioV2osH	Port input valid to OSC1↑ (I/O in setup time)		TBD	—	—	ns	
20*	TioR	Port output rise time	PIC16C715	—	10	25	ns	
			PIC16LC715	—	—	60	ns	
21*	TioF	Port output fall time	PIC16C715	—	10	25	ns	
			PIC16LC715	—	—	60	ns	
22††*	Tinp	INT pin high or low time		20	—	—	ns	
23††*	Trbp	RB7:RB4 change INT high or low time		20	—	—	ns	

* These parameters are characterized but not tested.

† Data in "Typ" column is at 5V, 25˚C unless otherwise stated. These parameters are for design guidance only and are not tested.

†† These parameters are asynchronous events not related to any internal clock edges.

Note 1: Measurements are taken in RC Mode where CLKOUT output is 4 x TOSC.

PRELIMINARY

Applicable Devices	710	71	711	715

FIGURE 13-4: RESET, WATCHDOG TIMER, OSCILLATOR START-UP TIMER, AND POWER-UP TIMER TIMING

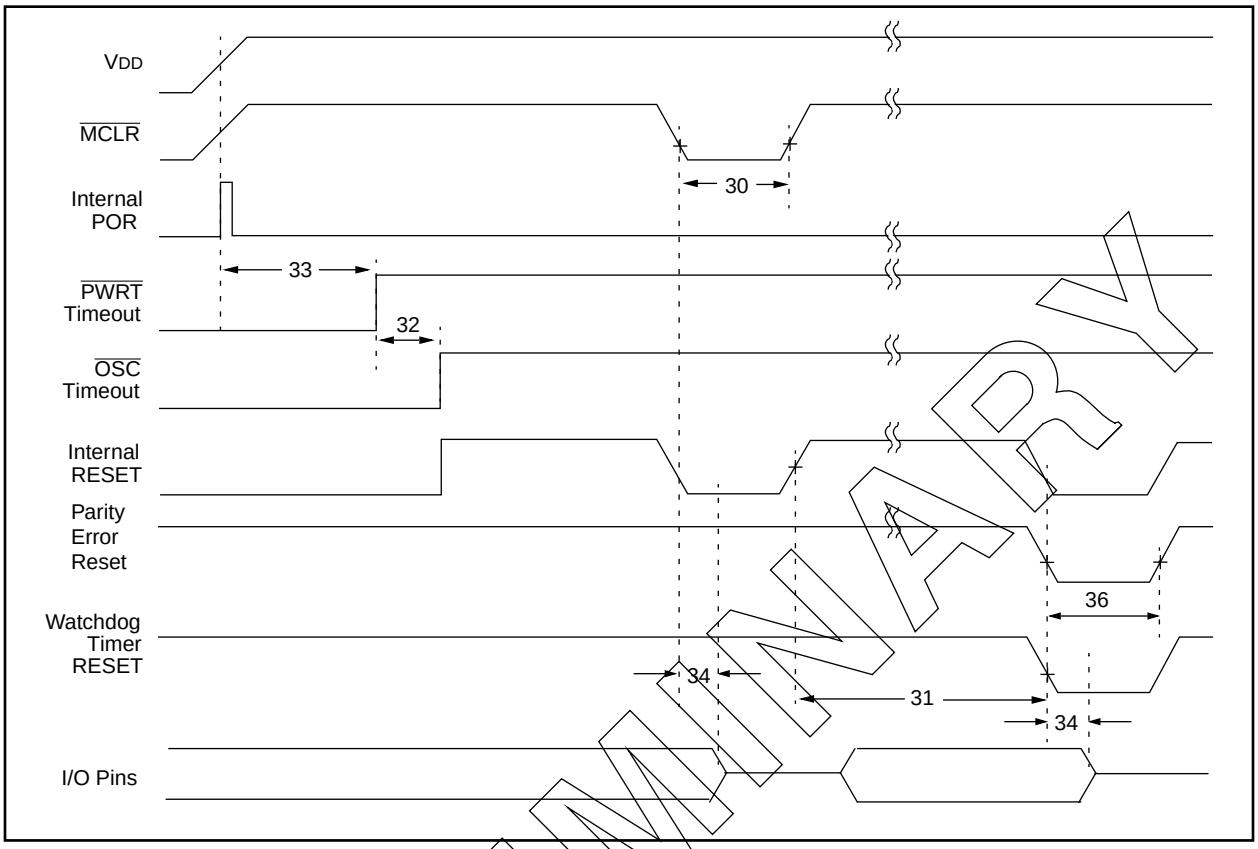

FIGURE 13-5: BROWN-OUT RESET TIMING

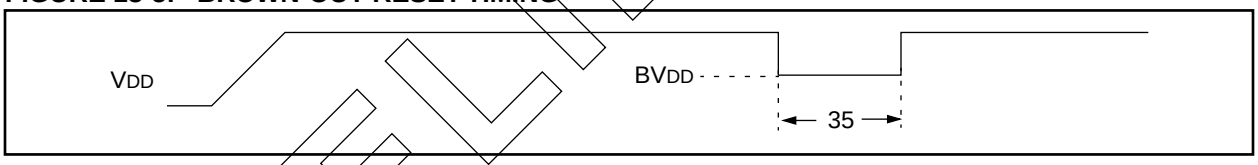

TABLE 13-4: RESET, WATCHDOG TIMER, OSCILLATOR START-UP TIMER, POWER-UP TIMER, AND BROWN-OUT RESET REQUIREMENTS

Parameter No.	Sym	Characteristic	Min	Typ†	Max	Units	Conditions
30	TmcL	MCLR Pulse Width (low)	2	—	—	µs	VDD = 5V, -40˚C to +125˚C
31*	Twdt	Watchdog Timer Time-out Period (No Prescaler)	7	18	33	ms	VDD = 5V, -40˚C to +125˚C
32	Tost	Oscillation Start-up Timer Period	—	1024TOSC	—	—	TOSC = OSC1 period
33*	Tpwrt	Power up Timer Period	28	72	132	ms	VDD = 5V, -40˚C to +125˚C
34	TIOZ	I/O Hi-impedance from MCLR Low or Watchdog Timer Reset	—	—	2.1	µs	
35	TBOR	Brown-out Reset pulse width	100	—	—	µs	VDD ≤ BVDD (D005)
36	TPER	Parity Error Reset	—	TBD	—	µs	

* These parameters are characterized but not tested.

† Data in "Typ" column is at 5V, 25˚C unless otherwise stated. These parameters are for design guidance only and are not tested.

PRELIMINARY

© 1997 Microchip Technology Inc.

Applicable Devices	710	71	711	715

FIGURE 13-6: TIMER0 CLOCK TIMINGS

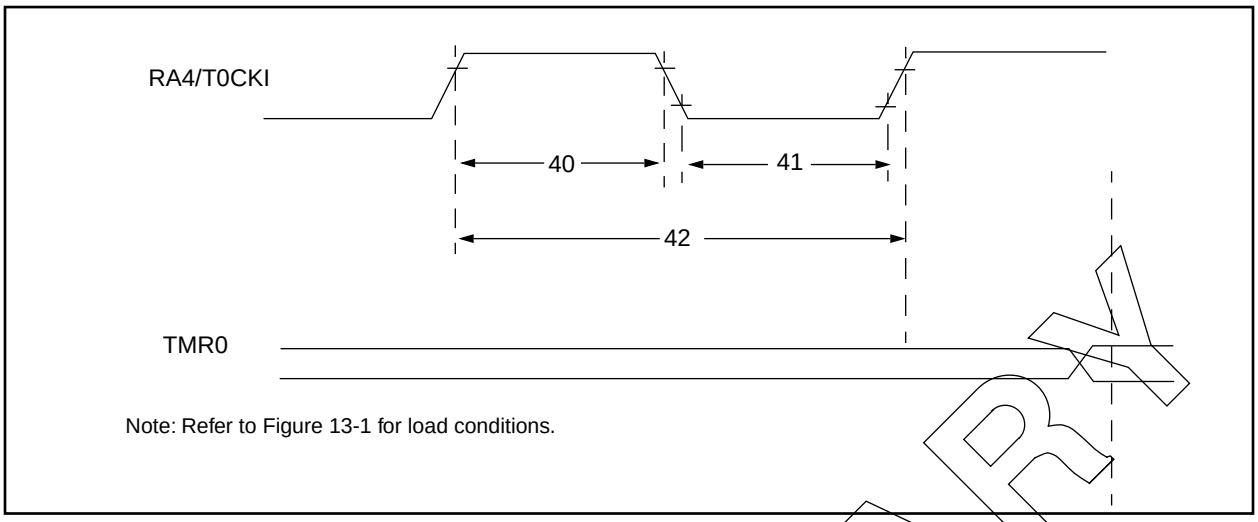

TABLE 13-5: TIMER0 CLOCK REQUIREMENTS

Param No.	Sym	Characteristic		Min	Typ†	Max	Units	Conditions
40	Tt0H	T0CKI High Pulse Width	No Prescaler	0.5TCY + 20*	—	—	ns	
			With Prescaler	10*	—	—	ns	
41	Tt0L	T0CKI Low Pulse Width	No Prescaler	0.5TCY + 20*	—	—	ns	
			With Prescaler	10*	—	—	ns	
42	Tt0P	T0CKI Period		Greater of: 20µs or $\frac{T_{CY} + 40}{N}$*	—	—	ns	N = prescale value (1, 2, 4,..., 256)
48	Tcke2tmrl	Delay from external clock edge to timer increment		2Tosc	—	7Tosc	—	

* These parameters are characterized but not tested.

† Data in "Typ" column is at 5V, 25˚C unless otherwise stated. These parameters are for design guidance only and are not tested.

PRELIMINARY

Applicable Devices	710	71	711	715

TABLE 13-6: A/D CONVERTER CHARACTERISTICS: PIC16C715-04 (COMMERCIAL, INDUSTRIAL, EXTENDED) PIC16C715-10 (COMMERCIAL, INDUSTRIAL, EXTENDED) PIC16C715-20 (COMMERCIAL, INDUSTRIAL, EXTENDED)

Parameter No.	Sym	Characteristic	Min	Typ†	Max	Units	Conditions
	NR	Resolution	—	—	8-bits	—	VREF = VDD, VSS ≤ AIN ≤ VREF
	NINT	Integral error	—	—	less than ±1 LSb	—	VREF = VDD, VSS ≤ AIN ≤ VREF
	NDIF	Differential error	—	—	less than ±1 LSb	—	VREF = VDD, VSS ≤ AIN ≤ VREF
	NFS	Full scale error	—	—	less than ±1 LSb	—	VREF = VDD, VSS ≤ AIN ≤ VREF
	NOFF	Offset error	—	—	less than ±1 LSb	—	VREF = VDD, VSS ≤ AIN ≤ VREF
	—	Monotonicity	—	guaranteed	—	—	VSS ≤ AIN ≤ VREF
	VREF	Reference voltage	2.5V	—	VDD + 0.3	V	
	VAIN	Analog input voltage	VSS - 0.3	—	VREF + 0.3	V	
	ZAIN	Recommended impedance of analog voltage source	—	—	10.0	kΩ	
	IAD	A/D conversion current (VDD)	—	180	—	µA	Average current consumption when A/D is on. (Note 1)
	IREF	VREF input current (Note 2)	—	—	1 10	mA µA	During sampling All other times

* These parameters are characterized but not tested.

† Data in "Typ" column is at 5V, 25°C unless otherwise stated. These parameters are for design guidance only and are not tested.

Note 1: When A/D is off, it will not consume any current other than minor leakage current. The power-down current spec includes any such leakage from the A/D module.

2: VREF current is from RA3 pin or VDD pin, whichever is selected as reference input.

PRELIMINARY

© 1997 Microchip Technology Inc.

Applicable Devices	710	71	711	715

TABLE 13-7: A/D CONVERTER CHARACTERISTICS: PIC16LC715-04 (COMMERCIAL, INDUSTRIAL)

Parameter No.	Sym	Characteristic	Min	Typ†	Max	Units	Conditions
	NR	Resolution	—	—	8-bits	—	VREF = VDD, VSS ≤ AIN ≤ VREF
	NINT	Integral error	—	—	less than ±1 LSb	—	VREF = VDD, VSS ≤ AIN ≤ VREF
	NDIF	Differential error	—	—	less than ±1 LSb	—	VREF = VDD, VSS ≤ AIN ≤ VREF
	NFS	Full scale error	—	—	less than ±1 LSb	—	VREF = VDD, VSS ≤ AIN ≤ VREF
	NOFF	Offset error	—	—	less than ±1 LSb	—	VREF = VDD, VSS ≤ AIN ≤ VREF
	—	Monotonicity	—	guaranteed	—	—	VSS ≤ AIN ≤ VREF
	VREF	Reference voltage	2.5V	—	VDD + 0.3	V	
	VAIN	Analog input voltage	VSS - 0.3	—	VREF + 0.3	V	
	ZAIN	Recommended impedance of analog voltage source	—	—	10.0	kΩ	
	IAD	A/D conversion current (VDD)	—	90	—	µA	Average current consumption when A/D is on. (Note 1)
	IREF	VREF input current (Note 2)	—	—	1 10	mA µA	During sampling All other times

* These parameters are characterized but not tested.

† Data in "Typ" column is at 5V, 25°C unless otherwise stated. These parameters are for design guidance only and are not tested.

Note 1: When A/D is off, it will not consume any current other than minor leakage current. The power-down current spec includes any such leakage from the A/D module.

2: VREF current is from RA3 pin or VDD pin, whichever is selected as reference input.

PRELIMINARY

Applicable Devices	710	71	711	715

FIGURE 13-7: A/D CONVERSION TIMING

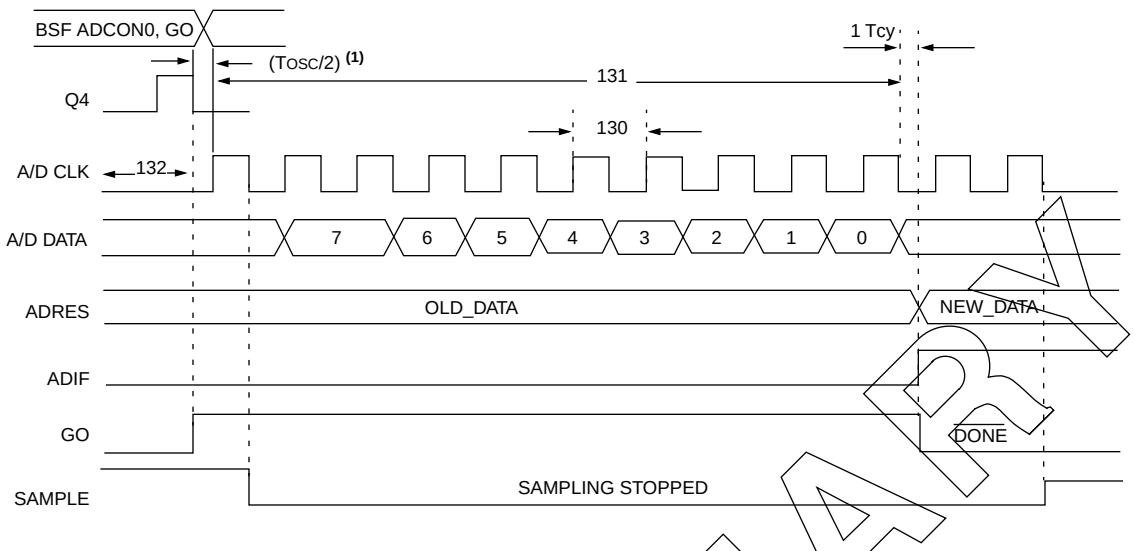

Note 1: If the A/D clock source is selected as RC, a time of TCY is added before the A/D clock starts. This allows the SLEEP instruction to be executed.

TABLE 13-8: A/D CONVERSION REQUIREMENTS

Parameter No.	Sym	Characteristic	Min	Typ†	Max	Units	Conditions
130	TAD	A/D clock period	1.6		—	µs	VREF ≥ 3.0V
			2.0		—	µs	VREF full range
130	TAD	A/D Internal RC Oscillator source					ADCS1:ADCS0 = 11 (RC oscillator source)
			3.0	6.0	9.0	µs	PIC16LC715, VDD = 3.0V
			2.0	4.0	6.0	µs	PIC16C715
131	TCNV	Conversion time (not including S/H time). Note 1	—	9.5TAD	—	—	
132	TACQ	Acquisition time	Note 2	20	—	µs	

* These parameters are characterized but not tested.

† Data in "Typ" column is at 5V, 25°C unless otherwise stated. These parameters are for design guidance only and are not tested.

Note 1: ADRES register may be read on the following TCY cycle.

PRELIMINARY

© 1997 Microchip Technology Inc.

Applicable Devices	710	71	711	715

14.0 DC AND AC CHARACTERISTICS GRAPHS AND TABLES FOR PIC16C715

The graphs and tables provided in this section are for design guidance and are not tested or guaranteed.

In some graphs or tables the data presented are outside specified operating range (i.e., outside specified V_{DD} range). This is for information only and devices are guaranteed to operate properly only within the specified range.

Note: The data presented in this section is a statistical summary of data collected on units from different lots over a period of time and matrix samples. 'Typical' represents the mean of the distribution at, 25°C, while 'max' or 'min' represents (mean +3σ) and (mean -3σ) respectively where σ is standard deviation.

FIGURE 14-1: TYPICAL I_{PD} vs. V_{DD} (WDT DISABLED, RC MODE)

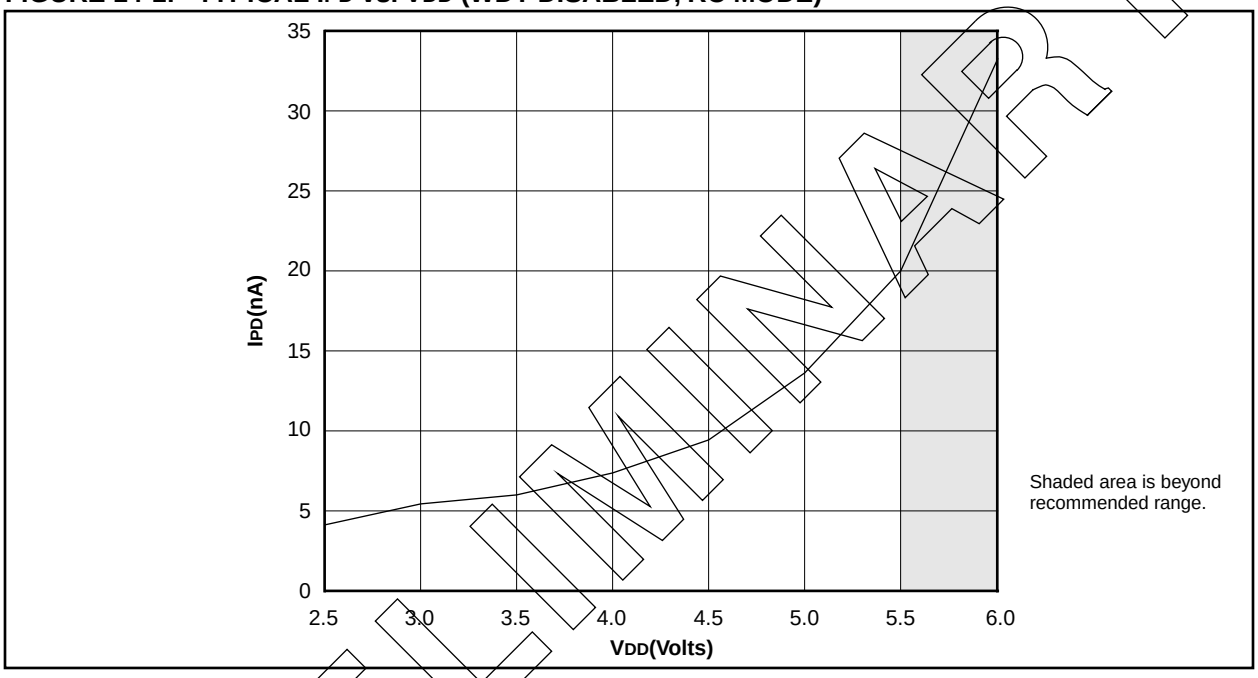

FIGURE 14-2: MAXIMUM I_{PD} vs. V_{DD} (WDT DISABLED, RC MODE)

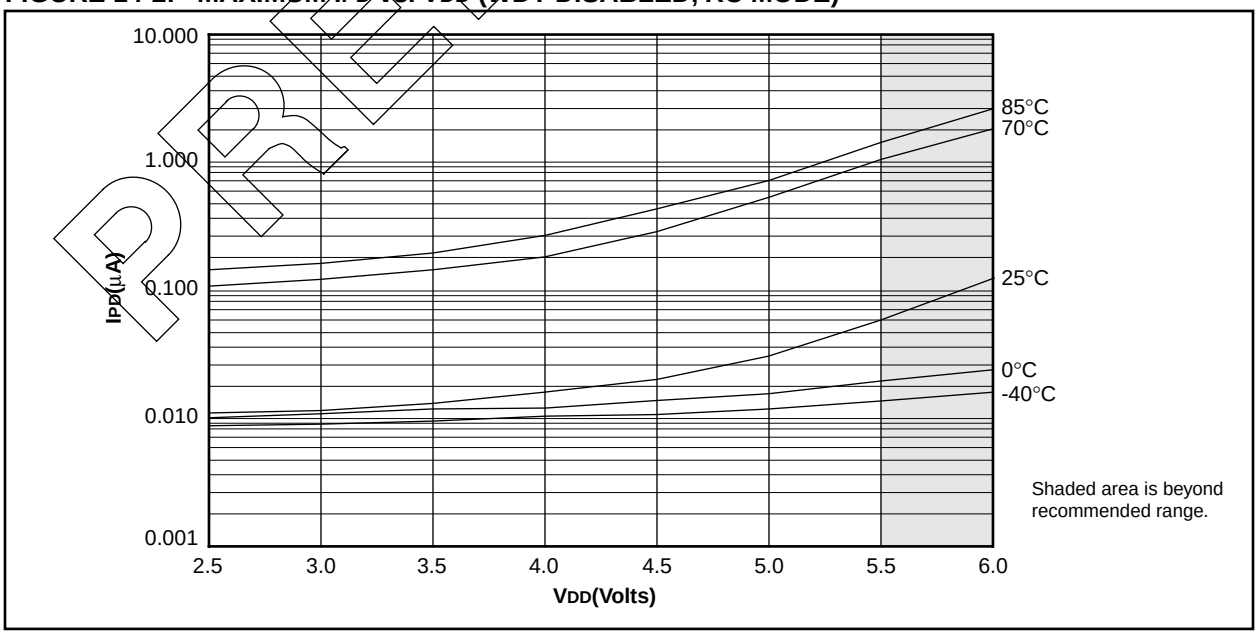

PRELIMINARY

Applicable Devices	710	71	711	715

FIGURE 14-3: TYPICAL IPD vs. VDD @ 25°C (WDT ENABLED, RC MODE)

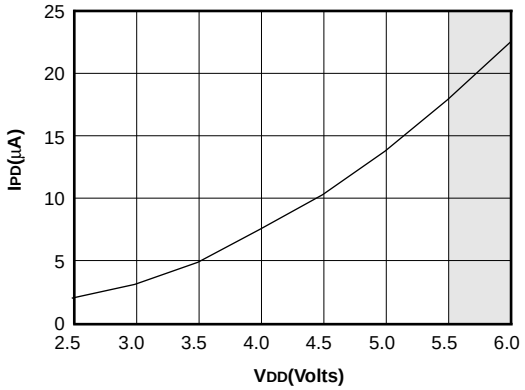

Shaded area is beyond recommended range.

FIGURE 14-4: MAXIMUM IPD vs. VDD (WDT ENABLED, RC MODE)

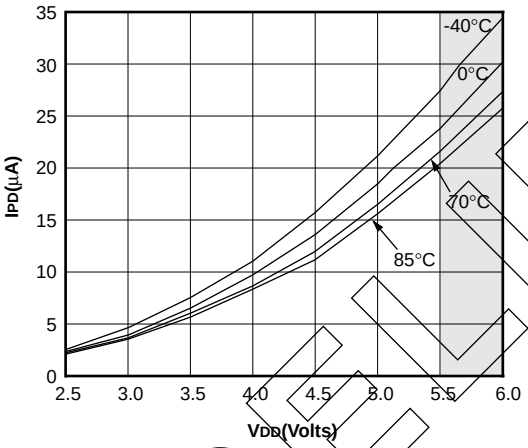

Shaded area is beyond recommended range.

FIGURE 14-5: TYPICAL RC OSCILLATOR FREQUENCY vs. VDD

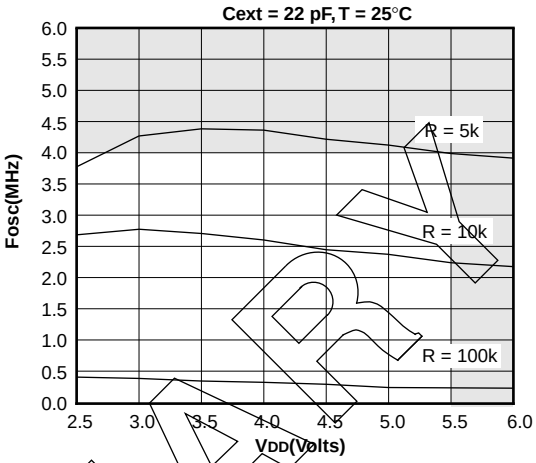

Shaded area is beyond recommended range.

FIGURE 14-6: TYPICAL RC OSCILLATOR FREQUENCY vs. VDD

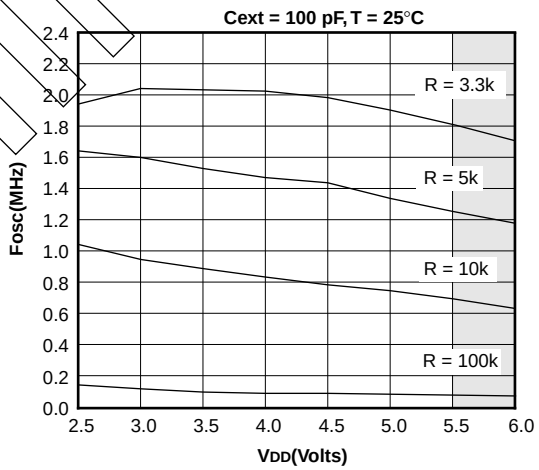

Shaded area is beyond recommended range.

FIGURE 14-7: TYPICAL RC OSCILLATOR FREQUENCY vs. VDD

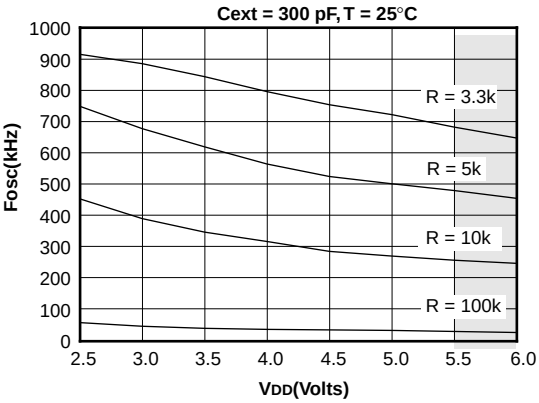

Shaded area is beyond recommended range.

PRELIMINARY

© 1997 Microchip Technology Inc.

Applicable Devices	710	71	711	715

FIGURE 14-8: TYPICAL IPD vs. VDD BROWN-OUT DETECT ENABLED (RC MODE)

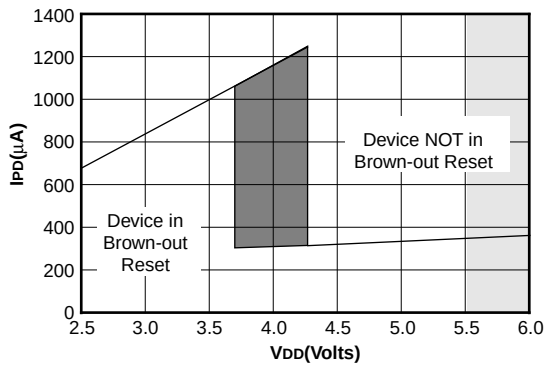

This shaded region represents the built-in hysteresis of the brown-out reset circuitry.

Shaded area is beyond recommended range.

FIGURE 14-9: MAXIMUM IPD vs. VDD BROWN-OUT DETECT ENABLED (85°C TO -40°C, RC MODE)

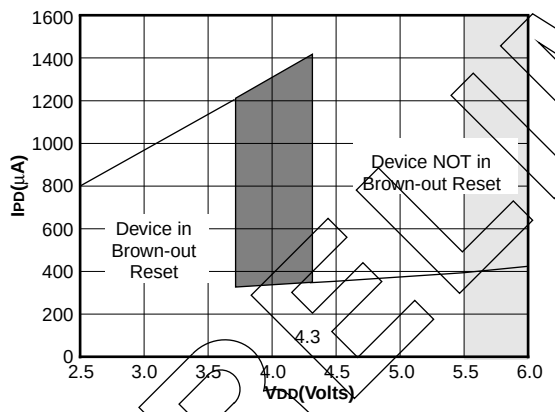

This shaded region represents the built-in hysteresis of the brown-out reset circuitry.

Shaded area is beyond recommended range.

FIGURE 14-10: TYPICAL IPD vs. TIMER1 ENABLED (32 kHz, RC0/RC1 = 33 pF/33 pF, RC MODE)

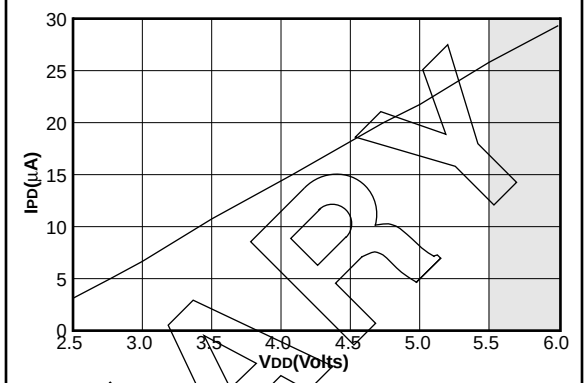

Shaded area is beyond recommended range.

FIGURE 14-11: MAXIMUM IPD vs. TIMER1 ENABLED (32 kHz, RC0/RC1 = 33 pF/33 pF, 85°C TO -40°C, RC MODE)

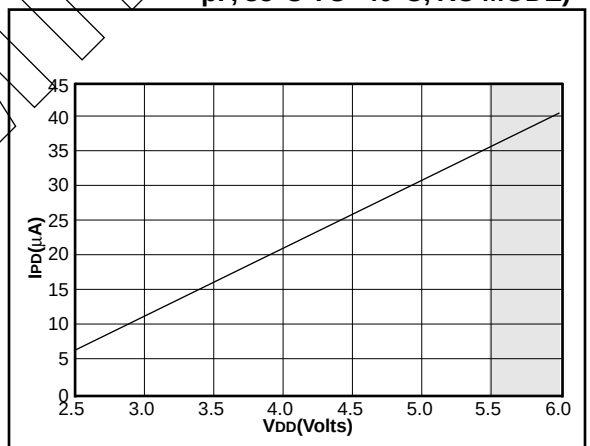

Shaded area is beyond recommended range.

PRELIMINARY

Applicable Devices	710	71	711	715

FIGURE 14-12: TYPICAL IDD vs. FREQUENCY (RC MODE @ 22 pF, 25°C)

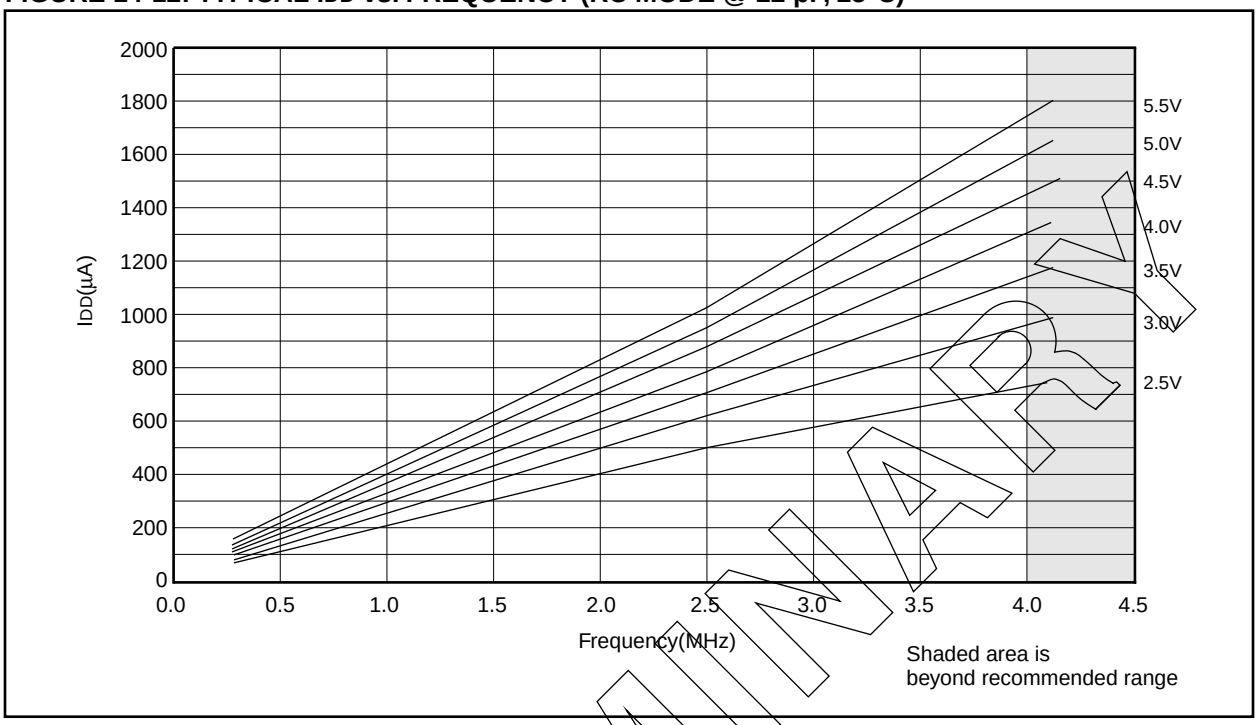

FIGURE 14-13: MAXIMUM IDD vs. FREQUENCY (RC MODE @ 22 pF, -40°C TO 85°C)

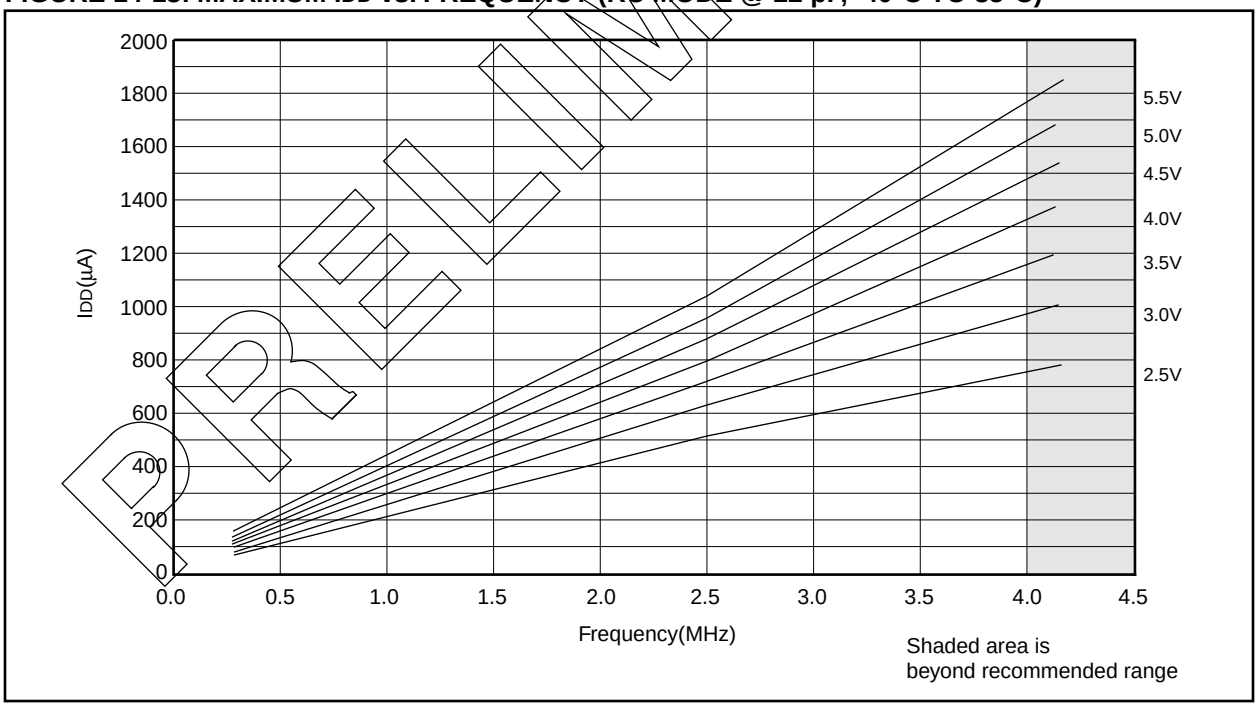

PRELIMINARY

© 1997 Microchip Technology Inc.

Applicable Devices	710	71	711	715

FIGURE 14-14: TYPICAL IDD vs. FREQUENCY (RC MODE @ 100 pF, 25°C)

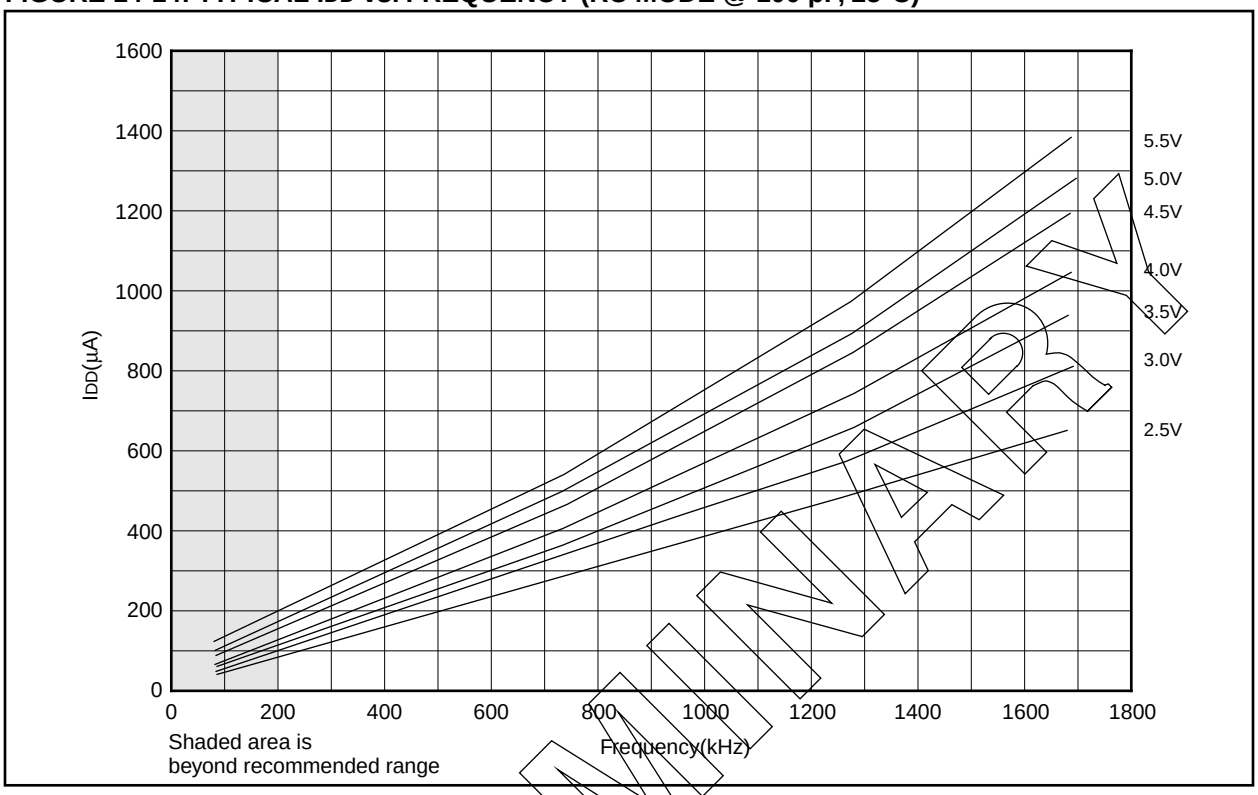

FIGURE 14-15: MAXIMUM IDD vs. FREQUENCY (RC MODE @ 100 pF, -40°C TO 85°C)

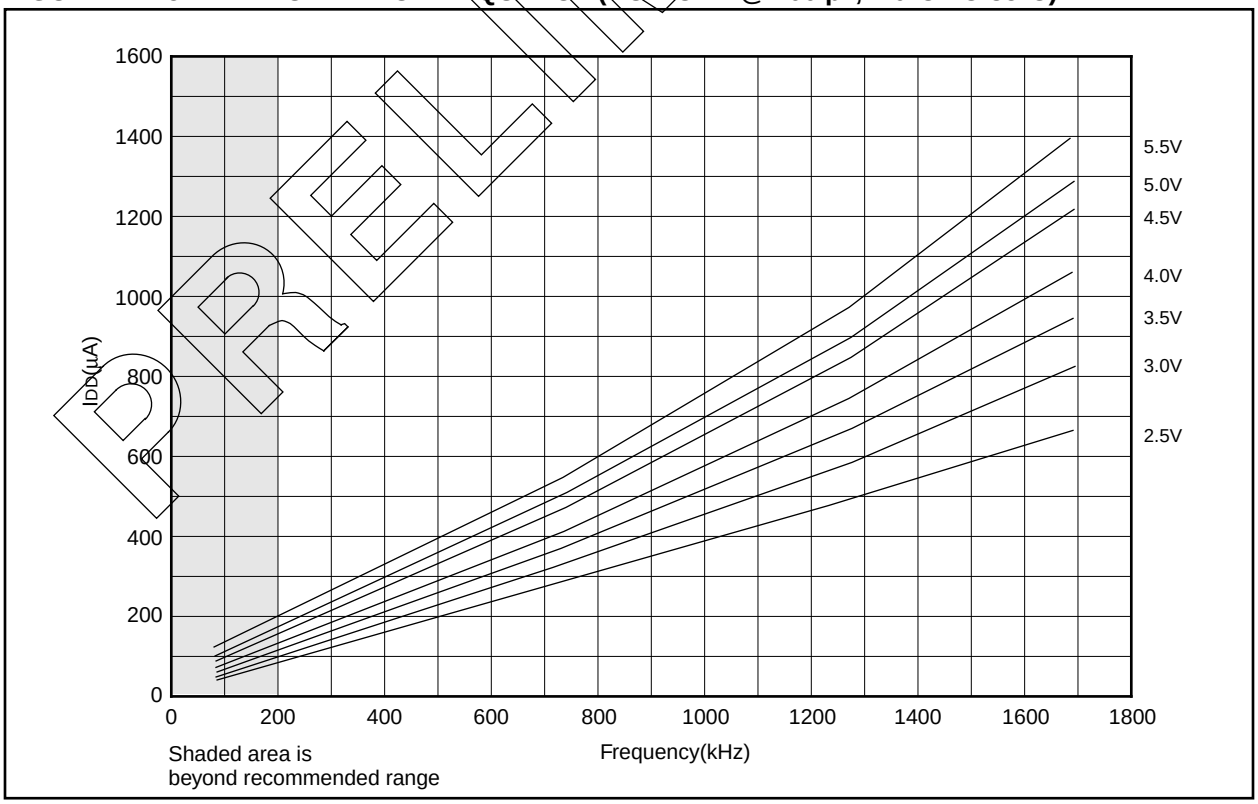

PRELIMINARY

Applicable Devices	710	71	711	715

FIGURE 14-16: TYPICAL IDD vs. FREQUENCY (RC MODE @ 300 pF, 25°C)

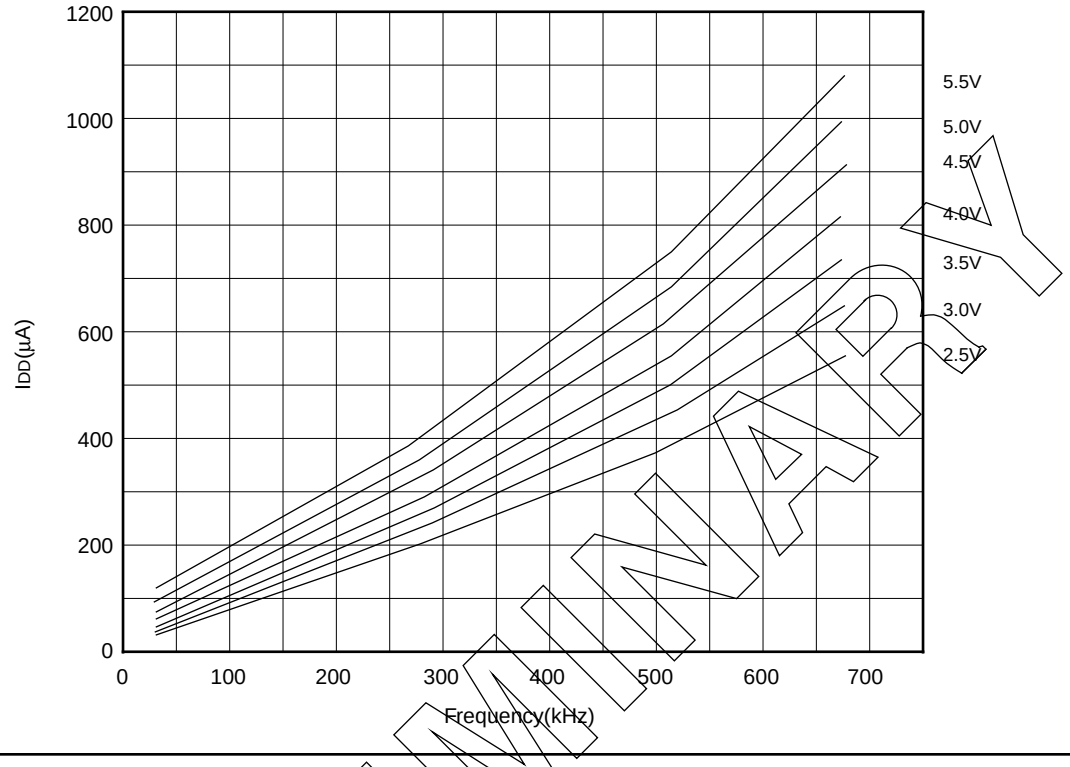

FIGURE 14-17: MAXIMUM IDD vs. FREQUENCY (RC MODE @ 300 pF, -40°C TO 85°C)

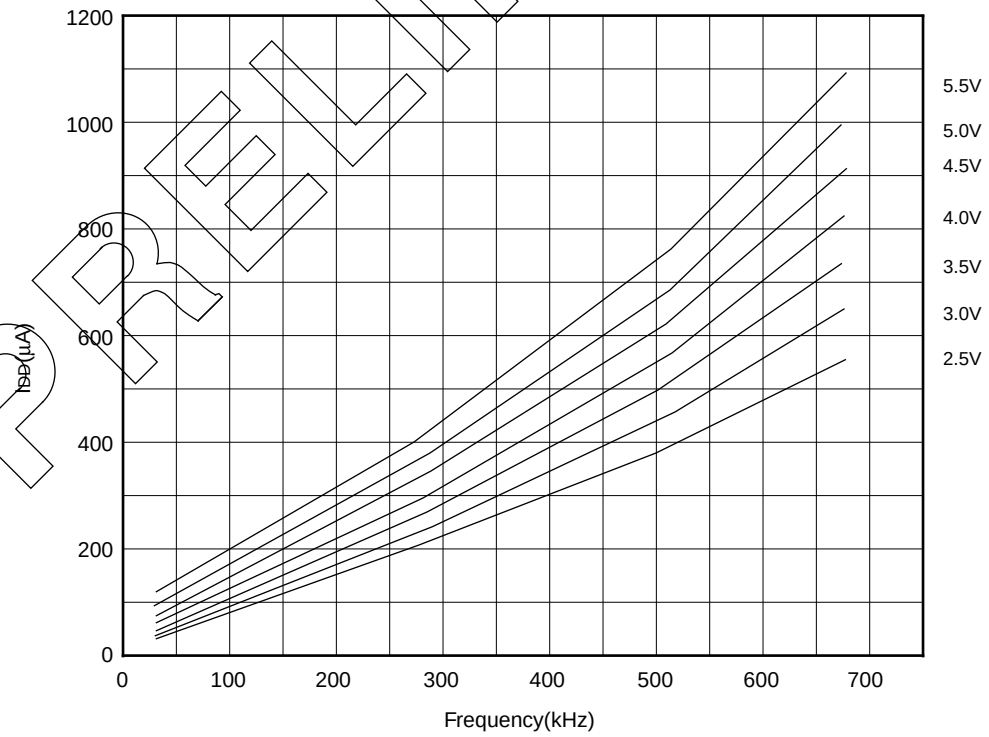

PRELIMINARY

© 1997 Microchip Technology Inc.

Applicable Devices	710	71	711	715

FIGURE 14-18: TYPICAL IDD vs. CAPACITANCE @ 500 kHz (RC MODE)

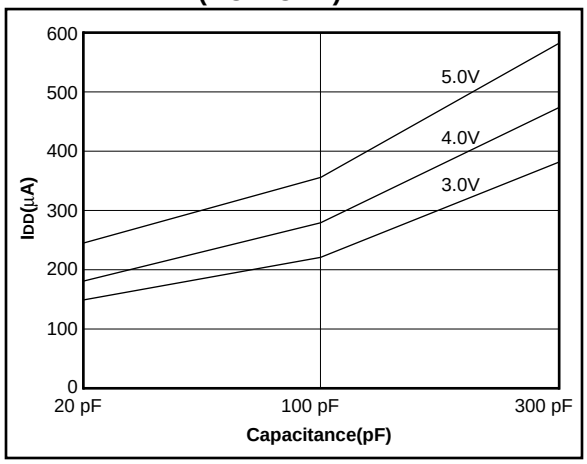

TABLE 14-1: RC OSCILLATOR FREQUENCIES

Cext	Rext	Average Fosc @ 5V, 25°C	
22 pF	5k	4.12 MHz	± 1.4%
	10k	2.35 MHz	± 1.4%
	100k	268 kHz	± 1.1%
100 pF	3.3k	1.80 MHz	± 1.0%
	5k	1.27 MHz	± 1.0%
	10k	688 kHz	± 1.2%
	100k	77.2 kHz	± 1.0%
300 pF	3.3k	707 kHz	± 1.4%
	5k	501 kHz	± 1.2%
	10k	269 kHz	± 1.6%
	100k	28.3 kHz	± 1.1%

The percentage variation indicated here is part to part variation due to normal process distribution. The variation indicated is ±3 standard deviation from average value for VDD = 5V.

FIGURE 14-19: TRANSCONDUCTANCE(gm) OF HS OSCILLATOR vs. VDD

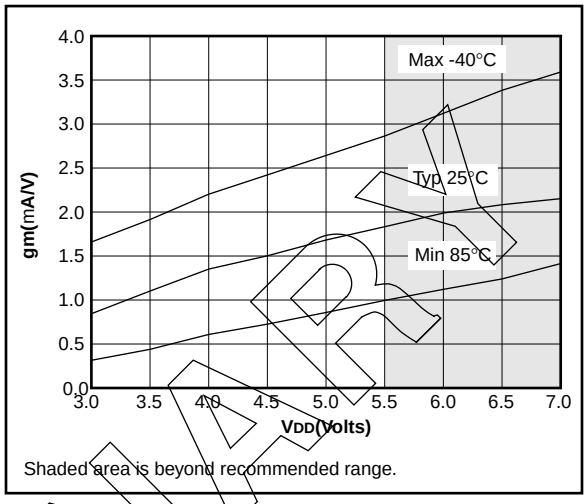

FIGURE 14-20: TRANSCONDUCTANCE(gm) OF LP OSCILLATOR vs. VDD

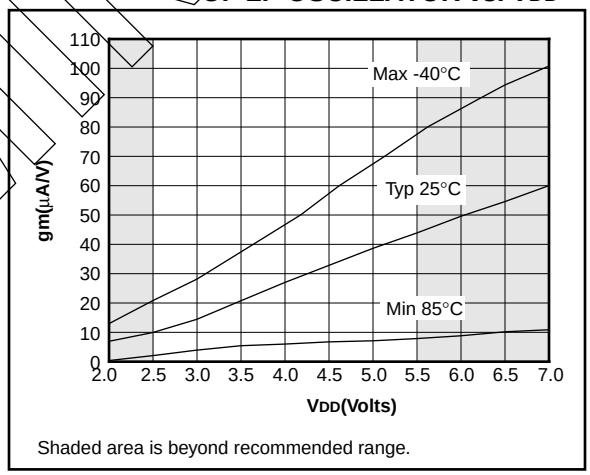

FIGURE 14-21: TRANSCONDUCTANCE(gm) OF XT OSCILLATOR vs. VDD

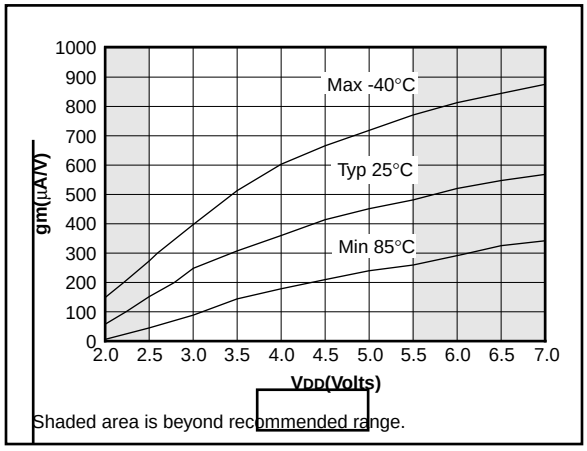

PRELIMINARY

Applicable Devices	710	71	711	715

FIGURE 14-22: TYPICAL XTAL STARTUP TIME vs. VDD (LP MODE, 25°C)

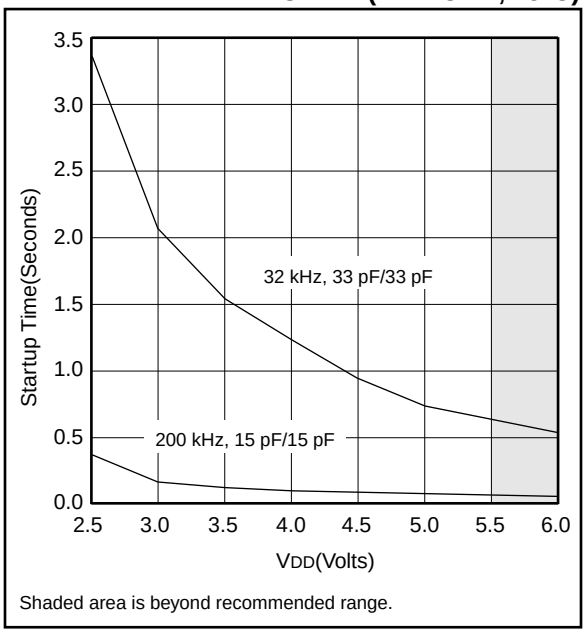

FIGURE 14-23: TYPICAL XTAL STARTUP TIME vs. VDD (HS MODE, 25°C)

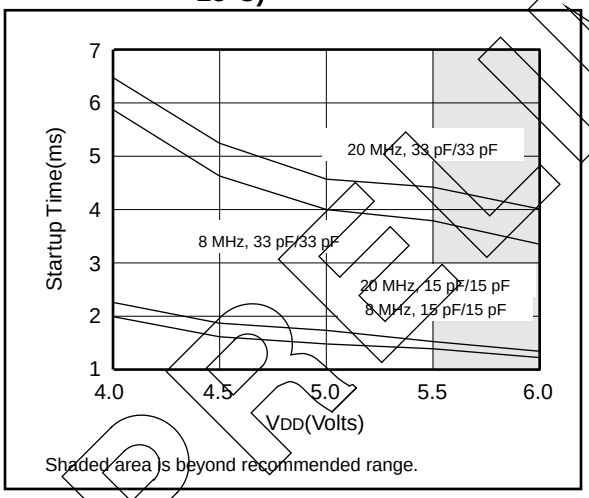

FIGURE 14-24: TYPICAL XTAL STARTUP TIME vs. VDD (XT MODE, 25°C)

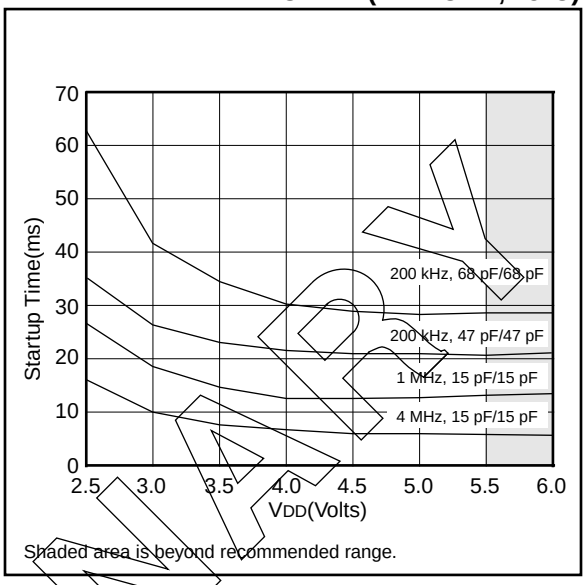

TABLE 14-2: CAPACITOR SELECTION FOR CRYSTAL OSCILLATORS

Osc Type	Crystal Freq	Cap. Range C1	Cap. Range C2
LP	32 kHz	33 pF	33 pF
	200 kHz	15 pF	15 pF
XT	200 kHz	47-68 pF	47-68 pF
	1 MHz	15 pF	15 pF
	4 MHz	15 pF	15 pF
HS	4 MHz	15 pF	15 pF
	8 MHz	15-33 pF	15-33 pF
	20 MHz	15-33 pF	15-33 pF
Crystals Used			
32 kHz	Epson C-001R32.768K-A	± 20 PPM	
200 kHz	STD XTL 200.000KHz	± 20 PPM	
1 MHz	ECS ECS-10-13-1	± 50 PPM	
4 MHz	ECS ECS-40-20-1	± 50 PPM	
8 MHz	EPSON CA-301 8.000M-C	± 30 PPM	
20 MHz	EPSON CA-301 20.000M-C	± 30 PPM	

PRELIMINARY

© 1997 Microchip Technology Inc.

Applicable Devices	710	71	711	715

FIGURE 14-25: TYPICAL IDD vs. FREQUENCY (LP MODE, 25°C)

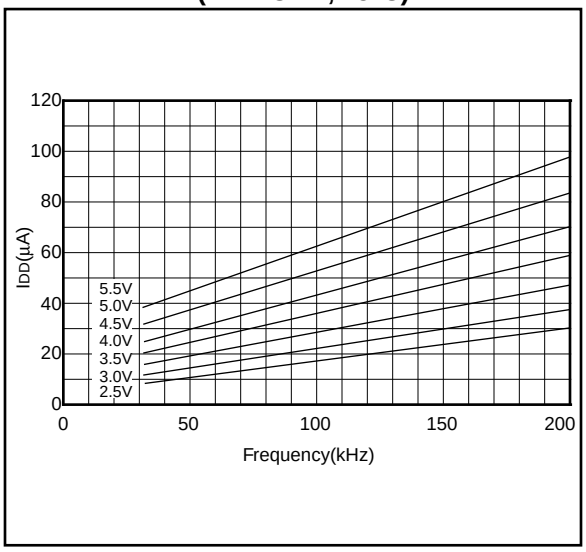

FIGURE 14-26: MAXIMUM IDD vs. FREQUENCY (LP MODE, 85°C TO -40°C)

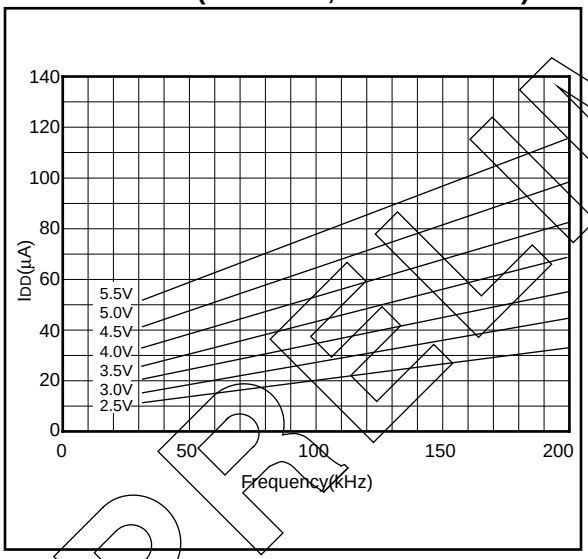

FIGURE 14-27: TYPICAL IDD vs. FREQUENCY (XT MODE, 25°C)

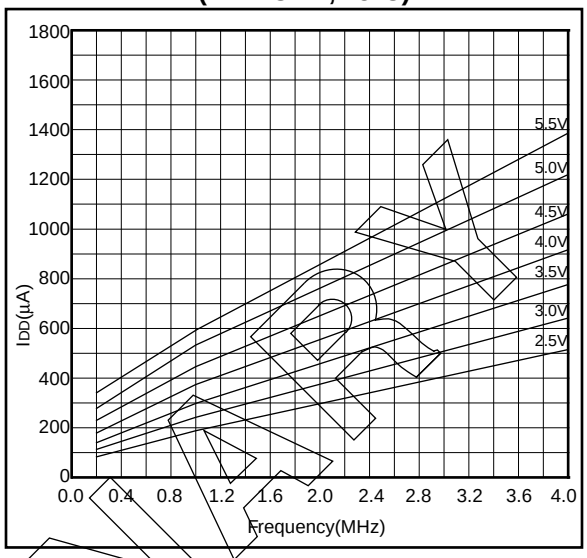

FIGURE 14-28: MAXIMUM IDD vs. FREQUENCY (XT MODE, -40°C TO 85°C)

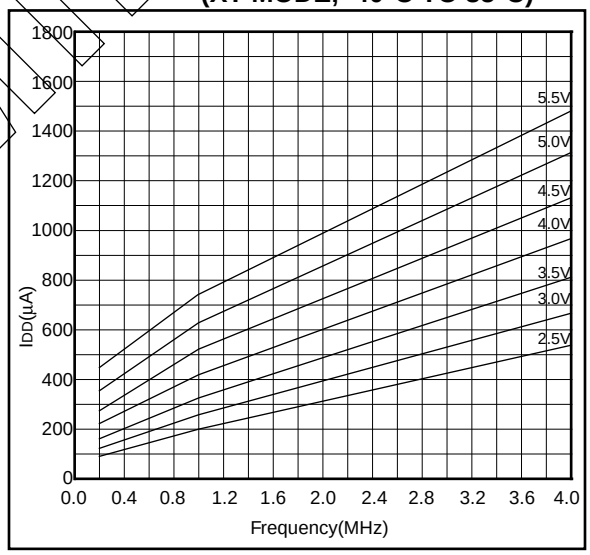

PRELIMINARY

Applicable Devices	710	71	711	715

FIGURE 14-29: TYPICAL IDD vs. FREQUENCY (HS MODE, 25°C)

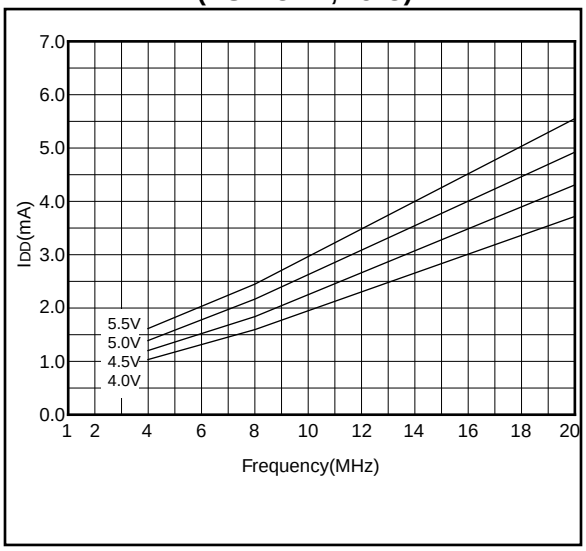

FIGURE 14-30: MAXIMUM IDD vs. FREQUENCY (HS MODE, -40°C TO 85°C)

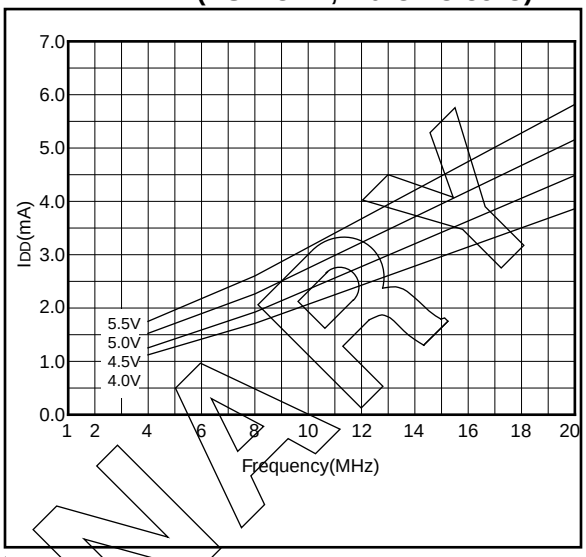

PRELIMINARY

© 1997 Microchip Technology Inc.

Applicable Devices	710	71	711	715

15.0 ELECTRICAL CHARACTERISTICS FOR PIC16C71

Absolute Maximum Ratings †

Ambient temperature under bias ..... -55 to +125˚C
Storage temperature ..... -65˚C to +150˚C
Voltage on any pin with respect to V_{SS} (except V_{DD}, $\overline{MCLR}$, and RA4) ..... -0.3V to (V_{DD} + 0.3V)
Voltage on V_{DD} with respect to V_{SS} ..... -0.3 to +7.5V
Voltage on $\overline{MCLR}$ with respect to V_{SS} (Note 2) ..... 0 to +14V
Voltage on RA4 with respect to Vss ..... 0 to +14V
Total power dissipation (Note 1) ..... 800 mW
Maximum current out of V_{SS} pin ..... 150 mA
Maximum current into V_{DD} pin ..... 100 mA
Input clamp current, I_{IK} (V_I < 0 or V_I > V_{DD}) ..... ± 20 mA
Output clamp current, I_{OK} (V_O < 0 or V_O > V_{DD}) ..... ± 20 mA
Maximum output current sunk by any I/O pin ..... 25 mA
Maximum output current sourced by any I/O pin ..... 20 mA
Maximum current sunk by PORTA ..... 80 mA
Maximum current sourced by PORTA ..... 50 mA
Maximum current sunk by PORTB ..... 150 mA
Maximum current sourced by PORTB ..... 100 mA

Note 1: Power dissipation is calculated as follows: Pdis = V_{DD} x {I_{DD} - ∑ I_{OH}} + ∑ {(V_{DD}-V_{OH}) x I_{OH}} + ∑(V_{OI} x I_{OL})

Note 2: Voltage spikes below V_{SS} at the $\overline{MCLR}$ pin, inducing currents greater than 80 mA, may cause latch-up. Thus, a series resistor of 50-100Ω should be used when applying a “low” level to the $\overline{MCLR}$ pin rather than pulling this pin directly to V_{SS}.

† NOTICE: Stresses above those listed under “Absolute Maximum Ratings” may cause permanent damage to the device. This is a stress rating only and functional operation of the device at those or any other conditions above those indicated in the operation listings of this specification is not implied. Exposure to maximum rating conditions for extended periods may affect device reliability.

TABLE 15-1: CROSS REFERENCE OF DEVICE SPECS FOR OSCILLATOR CONFIGURATIONS AND FREQUENCIES OF OPERATION (COMMERCIAL DEVICES)

OSC	PIC16C71-04	PIC16C71-20	PIC16LC71-04	JW Devices
RC	V_{DD}: 4.0V to 6.0V I_{DD}: 3.3 mA max. at 5.5V I_{PD}: 14 µA max. at 4V Freq:4 MHz max.	V_{DD}: 4.5V to 5.5V I_{DD}: 1.8 mA typ. at 5.5V I_{PD}: 1.0 µA typ. at 4V Freq: 4 MHz max.	V_{DD}: 3.0V to 6.0V I_{DD}: 1.4 mA typ. at 3.0V I_{PD}: 0.6 µA typ. at 3V Freq: 4 MHz max.	V_{DD}: 4.0V to 6.0V I_{DD}: 3.3 mA max. at 5.5V I_{PD}: 14 µA max. at 4V Freq:4 MHz max.
XT	V_{DD}: 4.0V to 6.0V I_{DD}: 3.3 mA max. at 5.5V I_{PD}: 14 µA max. at 4V Freq: 4 MHz max.	V_{DD}: 4.5V to 5.5V I_{DD}: 1.8 mA typ. at 5.5V I_{PD}: 1.0 µA typ. at 4V Freq: 4 MHz max.	V_{DD}: 3.0V to 6.0V I_{DD}: 1.4 mA typ. at 3.0V I_{PD}: 0.6 µA typ. at 3V Freq: 4 MHz max.	V_{DD}: 4.0V to 6.0V I_{DD}: 3.3 mA max. at 5.5V I_{PD}: 14 µA max. at 4V Freq: 4 MHz max.
HS	V_{DD}: 4.5V to 5.5V I_{DD}: 13.5 mA typ. at 5.5V I_{PD}: 1.0 µA typ. at 4.5V Freq: 4 MHz max.	V_{DD}: 4.5V to 5.5V I_{DD}: 30 mA max. at 5.5V I_{PD}: 1.0 µA typ. at 4.5V Freq: 20 MHz max.	Not recommended for use in HS mode	V_{DD}: 4.5V to 5.5V I_{DD}: 30 mA max. at 5.5V I_{PD}: 1.0 µA typ. at 4.5V Freq: 20 MHz max.
LP	V_{DD}: 4.0V to 6.0V I_{DD}: 15 µA typ. at 32 kHz, 4.0V I_{PD}: 0.6 µA typ. at 4.0V Freq: 200 kHz max.	Not recommended for use in LP mode	V_{DD}: 3.0V to 6.0V I_{DD}: 32 µA max. at 32 kHz, 3.0V I_{PD}: 9 µA max. at 3.0V Freq: 200 kHz max.	V_{DD}: 3.0V to 6.0V I_{DD}: 32 µA max. at 32 kHz, 3.0V I_{PD}: 9 µA max. at 3.0V Freq: 200 kHz max.

The shaded sections indicate oscillator selections which are tested for functionality, but not for MIN/MAX specifications. It is recommended that the user select the device type that ensures the specifications required.

© 1997 Microchip Technology Inc.

Applicable Devices	710	71	711	715

15.1 DC Characteristics: PIC16C71-04 (Commercial, Industrial) PIC16C71-20 (Commercial, Industrial)

DC CHARACTERISTICS			Standard Operating Conditions (unless otherwise stated) Operating temperature 0˚C ≤ TA ≤ +70˚C (commercial) -40˚C ≤ TA ≤ +85˚C (industrial)				
Param No.	**Characteristic**	**Sym**	**Min**	**Typ†**	**Max**	**Units**	**Conditions**
D001 D001A	Supply Voltage	VDD	4.0 4.5	- -	6.0 5.5	V V	XT, RC and LP osc configuration HS osc configuration
D002*	RAM Data Retention Voltage (Note 1)	VDR	-	1.5	-	V	
D003	VDD start voltage to ensure internal Power-on Reset signal	VPOR	-	VSS	-	V	See section on Power-on Reset for details
D004*	VDD rise rate to ensure internal Power-on Reset signal	SVDD	0.05	-	-	V/ms	See section on Power-on Reset for details
D010 D013	Supply Current (Note 2)	IDD	- -	1.8 13.5	3.3 30	mA mA	XT, RC osc configuration FOSC = 4 MHz, VDD = 5.5V (Note 4) HS osc configuration FOSC = 20 MHz, VDD = 5.5V
D020 D021 D021A	Power-down Current (Note 3)	IPD	- - -	7 1.0 1.0	28 14 16	µA µA µA	VDD = 4.0V, WDT enabled, -40°C to +85°C VDD = 4.0V, WDT disabled, -0°C to +70°C VDD = 4.0V, WDT disabled, -40°C to +85°C

* These parameters are characterized but not tested.

† Data in "Typ" column is at 5V, 25˚C unless otherwise stated. These parameters are for design guidance only and are not tested.

Note 1: This is the limit to which VDD can be lowered without losing RAM data.

2: The supply current is mainly a function of the operating voltage and frequency. Other factors such as I/O pin loading and switching rate, oscillator type, internal code execution pattern, and temperature also have an impact on the current consumption.
The test conditions for all IDD measurements in active operation mode are:
OSC1 = external square wave, from rail to rail; all I/O pins tristated, pulled to VDD
$\overline{\text{MCLR}}$ = VDD; WDT enabled/disabled as specified.

3: The power-down current in SLEEP mode does not depend on the oscillator type. Power-down current is measured with the part in SLEEP mode, with all I/O pins in hi-impedance state and tied to VDD and VSS.

4: For RC osc configuration, current through Rext is not included. The current through the resistor can be estimated by the formula Ir = VDD/2Rext (mA) with Rext in kOhm.

© 1997 Microchip Technology Inc.

Applicable Devices	710	71	711	715

15.2 DC Characteristics: PIC16LC71-04 (Commercial, Industrial)

DC CHARACTERISTICS							Standard Operating Conditions (unless otherwise stated) OOperating temperature 0˚C ≤ TA ≤ +70˚C (commercial) -40˚C ≤ TA ≤ +85˚C (industrial)
Param No.	**Characteristic**	**Sym**	**Min**	**Typ†**	**Max**	**Units**	**Conditions**
D001	Supply Voltage	VDD	3.0	-	6.0	V	XT, RC, and LP osc configuration
D002*	RAM Data Retention Voltage (Note 1)	VDR	-	1.5	-	V	
D003	VDD start voltage to ensure internal Power-on Reset signal	VPOR	-	VSS	-	V	See section on Power-on Reset for details
D004*	VDD rise rate to ensure internal Power-on Reset signal	SVDD	0.05	-	-	V/ms	See section on Power-on Reset for details
D010	Supply Current (Note 2)	IDD	-	1.4	2.5	mA	XT, RC osc configuration FOSC = 4 MHz, VDD = 3.0V (Note 4)
D010A			-	15	32	µA	LP osc configuration FOSC = 32 kHz, VDD = 3.0V, WDT disabled
D020	Power-down Current (Note 3)	IPD	-	5	20	µA	VDD = 3.0V, WDT enabled, -40°C to +85°C
D021			-	0.6	9	µA	VDD = 3.0V, WDT disabled, 0°C to +70°C
D021A			-	0.6	12	µA	VDD = 3.0V, WDT disabled, -40°C to +85°C

* These parameters are characterized but not tested.

† Data in "Typ" column is at 5V, 25˚C unless otherwise stated. These parameters are for design guidance only and are not tested.

Note 1: This is the limit to which VDD can be lowered without losing RAM data.

2: The supply current is mainly a function of the operating voltage and frequency. Other factors such as I/O pin loading and switching rate, oscillator type, internal code execution pattern, and temperature also have an impact on the current consumption.
The test conditions for all IDD measurements in active operation mode are:
OSC1 = external square wave, from rail to rail; all I/O pins tristated, pulled to VDD
$\overline{\text{MCLR}}$ = VDD; WDT enabled/disabled as specified.

3: The power-down current in SLEEP mode does not depend on the oscillator type. Power-down current is measured with the part in SLEEP mode, with all I/O pins in hi-impedance state and tied to VDD and VSS.

4: For RC osc configuration, current through Rext is not included. The current through the resistor can be estimated by the formula Ir = VDD/2Rext (mA) with Rext in kOhm.

Applicable Devices	710	71	711	715

15.3 DC Characteristics: PIC16C71-04 (Commercial, Industrial) PIC16C71-20 (Commercial, Industrial) PIC16LC71-04 (Commercial, Industrial)

DC CHARACTERISTICS							**Standard Operating Conditions (unless otherwise stated)** OOperating temperature 0˚C ≤ TA ≤ +70˚C (commercial) -40˚C ≤ TA ≤ +85˚C (industrial) Operating voltage VDD range as described in DC spec Section 15.1 and Section 15.2.
Param No.	**Characteristic**	**Sym**	**Min**	**Typ †**	**Max**	**Units**	**Conditions**
	Input Low Voltage						
	I/O ports	VIL					
D030	with TTL buffer		VSS	-	0.15V	V	For entire VDD range
D031	with Schmitt Trigger buffer		VSS	-	0.8V	V	4.5 ≤ VDD ≤ 5.5V
D032	$\overline{\text{MCLR}}$, OSC1 (in RC mode)		VSS	-	0.2VDD	V	
D033	OSC1 (in XT, HS and LP)		VSS	-	0.3VDD	V	Note1
	Input High Voltage						
	I/O ports (Note 4)	VIH		-			
D040	with TTL buffer		2.0	-	VDD	V	4.5 ≤ VDD ≤ 5.5V
D040A			0.25VDD + 0.8V	-	VDD		For entire VDD range
D041	with Schmitt Trigger buffer		0.85VDD	-	VDD		For entire VDD range
D042	$\overline{\text{MCLR}}$, RB0/INT		0.85VDD	-	VDD	V	
D042A	OSC1 (XT, HS and LP)		0.7VDD	-	VDD	V	Note1
D043	OSC1 (in RC mode)		0.9VDD	-	VDD	V	
D070	PORTB weak pull-up current	IPURB	50	250	†400	µA	VDD = 5V, VPIN = VSS
	Input Leakage Current (Notes 2, 3)						
D060	I/O ports	IIL	-	-	±1	µA	Vss ≤ VPIN ≤ VDD, Pin at hi-impedance
D061	$\overline{\text{MCLR}}$, RA4/T0CKI		-	-	±5	µA	Vss ≤ VPIN ≤ VDD
D063	OSC1		-	-	±5	µA	Vss ≤ VPIN ≤ VDD, XT, HS and LP osc configuration
	Output Low Voltage						
D080	I/O ports	VOL	-	-	0.6	V	IOL = 8.5mA, VDD = 4.5V, -40°C to +85°C
D083	OSC2/CLKOUT (RC osc config)		-	-	0.6	V	IOL = 1.6mA, VDD = 4.5V, -40°C to +85°C
	Output High Voltage						
D090	I/O ports (Note 3)	VOH	VDD - 0.7	-	-	V	IOH = -3.0mA, VDD = 4.5V, -40°C to +85°C
D092	OSC2/CLKOUT (RC osc config)		VDD - 0.7	-	-	V	IOH = -1.3mA, VDD = 4.5V, -40°C to +85°C
D130*	**Open-Drain High Voltage**	VOD	-	-	14	V	RA4 pin

† Data in "Typ" column is at 5V, 25°C unless otherwise stated. These parameters are for design guidance only and are not tested.

Note 1: In RC oscillator configuration, the OSC1 pin is a Schmitt trigger input. It is not recommended that the PIC16C71 be driven with external clock in RC mode.

2: The leakage current on the $\overline{\text{MCLR}}$ pin is strongly dependent on the applied voltage level. The specified levels represent normal operating conditions. Higher leakage current may be measured at different input voltages.

3: Negative current is defined as current sourced by the pin.

4: PIC16C71 Rev. "Ax" INT pin has a TTL input buffer. PIC16C71 Rev. "Bx" INT pin has a Schmitt Trigger input buffer.

© 1997 Microchip Technology Inc.

Applicable Devices	710	71	711	715

DC CHARACTERISTICS							Standard Operating Conditions (unless otherwise stated) OOperating temperature 0˚C ≤ TA ≤ +70˚C (commercial) -40˚C ≤ TA ≤ +85˚C (industrial) Operating voltage VDD range as described in DC spec Section 15.1 and Section 15.2.
Param No.	**Characteristic**	**Sym**	**Min**	**Typ †**	**Max**	**Units**	**Conditions**
	Capacitive Loading Specs on Output Pins						
D100	OSC2 pin	COSC2			15	pF	In XT, HS and LP modes when external clock is used to drive OSC1.
D101	All I/O pins and OSC2 (in RC mode)	CIO			50	pF	

† Data in “Typ” column is at 5V, 25°C unless otherwise stated. These parameters are for design guidance only and are not tested.

Note 1: In RC oscillator configuration, the OSC1 pin is a Schmitt trigger input. It is not recommended that the PIC16C71 be driven with external clock in RC mode.

2: The leakage current on the $\overline{\text{MCLR}}$ pin is strongly dependent on the applied voltage level. The specified levels represent normal operating conditions. Higher leakage current may be measured at different input voltages.

3: Negative current is defined as current sourced by the pin.

4: PIC16C71 Rev. "Ax" INT pin has a TTL input buffer. PIC16C71 Rev. "Bx" INT pin has a Schmitt Trigger input buffer.

© 1997 Microchip Technology Inc.

Applicable Devices	710	71	711	715

15.4 Timing Parameter Symbology

The timing parameter symbols have been created following one of the following formats:

1. TppS2ppS
2. TppS

T			
F	Frequency	T	Time

Lowercase letters (pp) and their meanings:

pp			
cc	CCP1	osc	OSC1
ck	CLKOUT	rd	$\overline{RD}$
cs	$\overline{CS}$	rw	$\overline{RD}$ or $\overline{WR}$
di	SDI	sc	SCK
do	SDO	ss	$\overline{SS}$
dt	Data in	t0	T0CKI
io	I/O port	t1	T1CKI
mc	$\overline{MCLR}$	wr	$\overline{WR}$

Uppercase letters and their meanings:

S			
F	Fall	P	Period
H	High	R	Rise
I	Invalid (Hi-impedance)	V	Valid
L	Low	Z	Hi-impedance

FIGURE 15-1: LOAD CONDITIONS

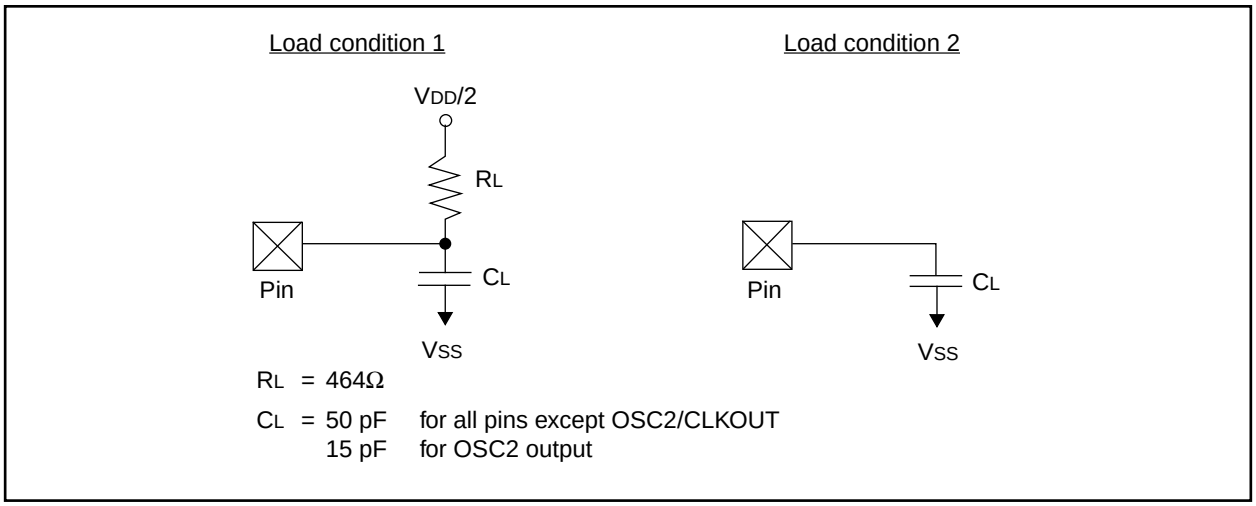

© 1997 Microchip Technology Inc.

Applicable Devices	710	71	711	715

15.5 Timing Diagrams and Specifications

FIGURE 15-2: EXTERNAL CLOCK TIMING

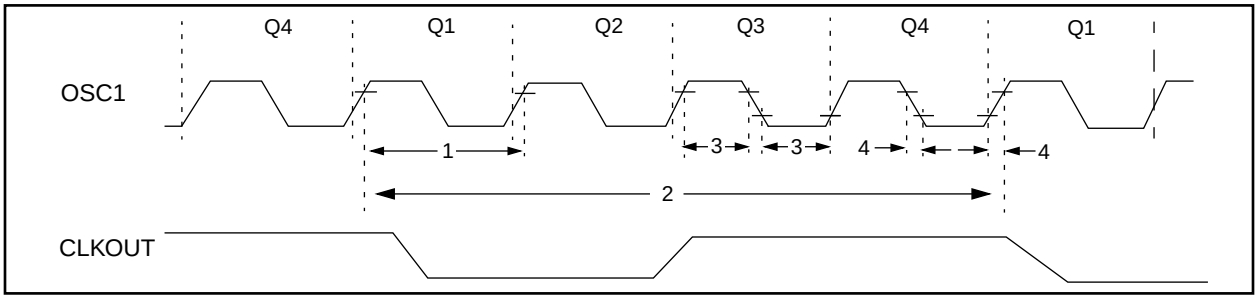

TABLE 15-2: EXTERNAL CLOCK TIMING REQUIREMENTS

Parameter No.	Sym	Characteristic	Min	Typ†	Max	Units	Conditions
	Fosc	**External CLKIN Frequency (Note 1)**	DC	—	4	MHz	XT osc mode
			DC	—	4	MHz	HS osc mode (-04)
			DC	—	20	MHz	HS osc mode (-20)
			DC	—	200	kHz	LP osc mode
		Oscillator Frequency (Note 1)	DC	—	4	MHz	RC osc mode
			0.1	—	4	MHz	XT osc mode
			1	—	4	MHz	HS osc mode
			1	—	20	MHz	HS osc mode
1	Tosc	**External CLKIN Period (Note 1)**	250	—	—	ns	XT osc mode
			250	—	—	ns	HS osc mode (-04)
			50	—	—	ns	HS osc mode (-20)
			5	—	—	µs	LP osc mode
		Oscillator Period (Note 1)	250	—	—	ns	RC osc mode
			250	—	10,000	ns	XT osc mode
			250	—	1,000	ns	HS osc mode (-04)
			50	—	1,000	ns	HS osc mode (-20)
			5	—	—	µs	LP osc mode
2	TCY	**Instruction Cycle Time (Note 1)**	1.0	TCY	DC	µs	TCY = 4/Fosc
3	TosL, TosH	**External Clock in (OSC1) High or Low Time**	50	—	—	ns	XT oscillator
			2.5	—	—	µs	LP oscillator
			10	—	—	ns	HS oscillator
4	TosR, TosF	**External Clock in (OSC1) Rise or Fall Time**	25	—	—	ns	XT oscillator
			50	—	—	ns	LP oscillator
			15	—	—	ns	HS oscillator

† Data in "Typ" column is at 5V, 25˚C unless otherwise stated. These parameters are for design guidance only and are not tested.

Note 1: Instruction cycle period (TCY) equals four times the input oscillator time-base period. All specified values are based on characterization data for that particular oscillator type under standard operating conditions with the device executing code. Exceeding these specified limits may result in an unstable oscillator operation and/or higher than expected current consumption. All devices are tested to operate at "min." values with an external clock applied to the OSC1/CLKIN pin. When an external clock input is used, the "Max." cycle time limit is "DC" (no clock) for all devices. OSC2 is disconnected (has no loading) for the PIC16C71.

© 1997 Microchip Technology Inc.

Applicable Devices	710	71	711	715

FIGURE 15-3: CLKOUT AND I/O TIMING

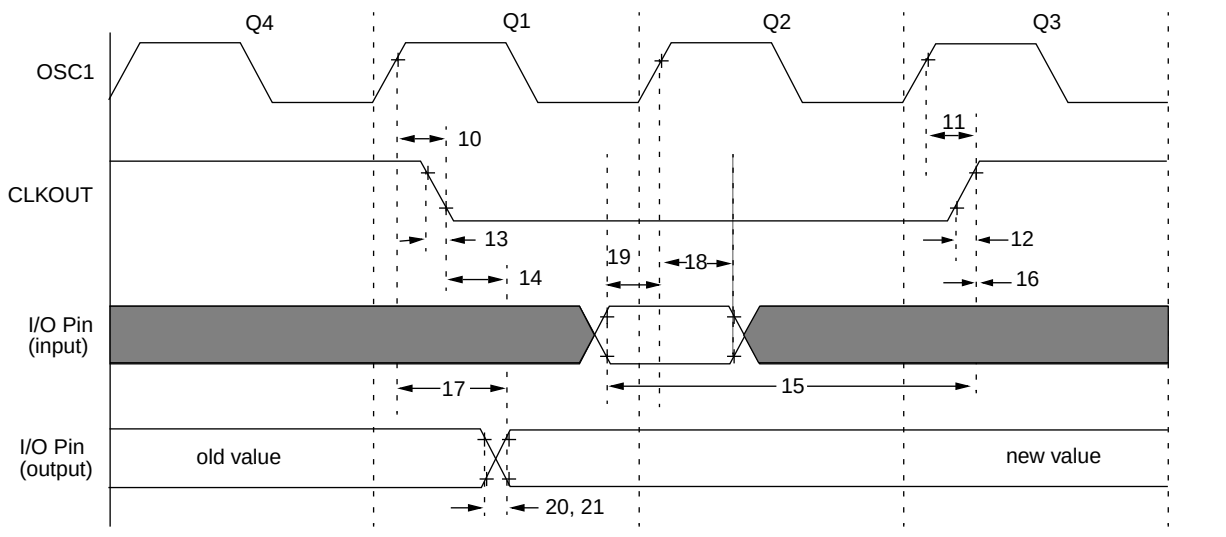

Note: Refer to Figure 15-1 for load conditions.

TABLE 15-3: CLKOUT AND I/O TIMING REQUIREMENTS

Parameter No.	Sym	Characteristic		Min	Typ†	Max	Units	Conditions
10*	TosH2ckL	OSC1↑ to CLKOUT↓		—	15	30	ns	Note 1
11*	TosH2ckH	OSC1↑ to CLKOUT↑		—	15	30	ns	Note 1
12*	TckR	CLKOUT rise time		—	5	15	ns	Note 1
13*	TckF	CLKOUT fall time		—	5	15	ns	Note 1
14*	TckL2ioV	CLKOUT ↓ to Port out valid		—	—	0.5TCY + 20	ns	Note 1
15*	TioV2ckH	Port in valid before CLKOUT ↑		0.25TCY + 25	—	—	ns	Note 1
16*	TckH2ioI	Port in hold after CLKOUT ↑		0	—	—	ns	Note 1
17*	TosH2ioV	OSC1↑ (Q1 cycle) to Port out valid		—	—	80 - 100	ns	
18*	TosH2ioI	OSC1↑ (Q2 cycle) to Port input invalid (I/O in hold time)	PIC16**C**71	100	—	—	ns	
			PIC16**LC**71	200	—	—	ns	
19*	TioV2osH	Port input valid to OSC1↑ (I/O in setup time)		0	—	—	ns	
20*	TioR	Port output rise time	PIC16**C**71	—	10	25	ns	
			PIC16**LC**71	—	—	60	ns	
21*	TioF	Port output fall time	PIC16**C**71	—	10	25	ns	
			PIC16**LC**71	—	—	60	ns	
22††*	Tinp	INT pin high or low time		20	—	—	ns	
23††*	Trbp	RB7:RB4 change INT high or low time		20	—	—	ns	

* These parameters are characterized but not tested.

†Data in "Typ" column is at 5V, 25˚C unless otherwise stated. These parameters are for design guidance only and are not tested.

†† These parameters are asynchronous events not related to any internal clock edges.

Note 1: Measurements are taken in RC Mode where CLKOUT output is 4 x TOSC.

© 1997 Microchip Technology Inc.

Applicable Devices	710	71	711	715

FIGURE 15-4: RESET, WATCHDOG TIMER, OSCILLATOR START-UP TIMER AND POWER-UP TIMER TIMING

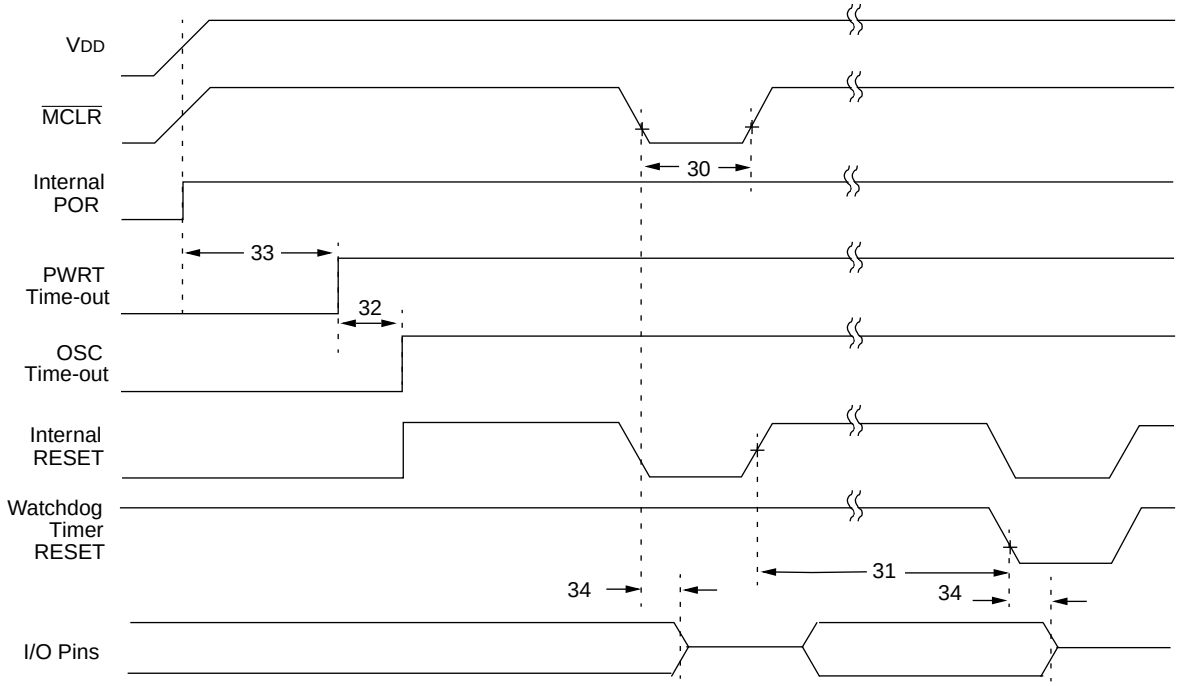

Note: Refer to Figure 15-1 for load conditions.

TABLE 15-4: RESET, WATCHDOG TIMER, OSCILLATOR START-UP TIMER AND POWER-UP TIMER REQUIREMENTS

Parameter No.	Sym	Characteristic	Min	Typ†	Max	Units	Conditions
30	TmcL	$\overline{\text{MCLR}}$ Pulse Width (low)	200	—	—	ns	VDD = 5V, -40˚C to +85˚C
31	Twdt	Watchdog Timer Time-out Period (No Prescaler)	7*	18	33*	ms	VDD = 5V, -40˚C to +85˚C
32	Tost	Oscillation Start-up Timer Period	—	1024 TOSC	—	—	TOSC = OSC1 period
33	Tpwrt	Power-up Timer Period	28*	72	132*	ms	VDD = 5V, -40˚C to +85˚C
34	TIOZ	I/O High Impedance from $\overline{\text{MCLR}}$ Low	—	—	100	ns	

* These parameters are characterized but not tested.

† Data in "Typ" column is at 5V, 25˚C unless otherwise stated. These parameters are for design guidance only and are not tested.

Applicable Devices	710	71	711	715

FIGURE 15-5: TIMER0 EXTERNAL CLOCK TIMINGS

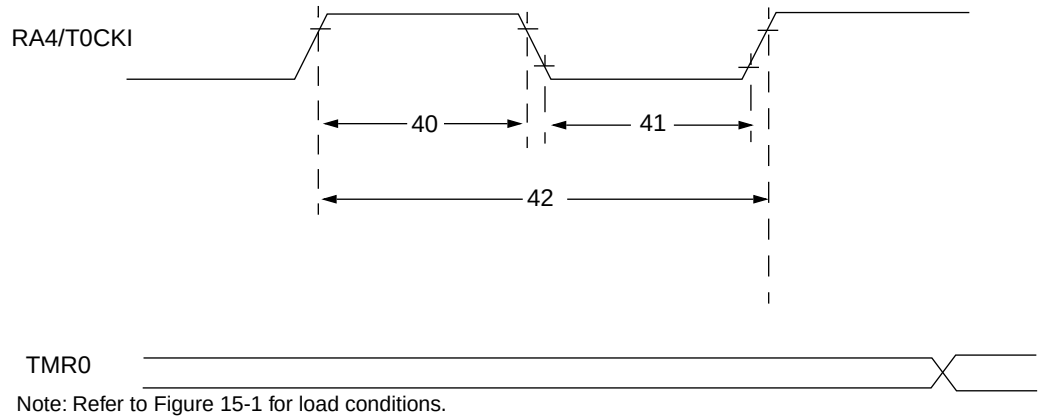

Note: Refer to Figure 15-1 for load conditions.

TABLE 15-5: TIMER0 EXTERNAL CLOCK REQUIREMENTS

Param No.	Sym	Characteristic		Min	Typ†	Max	Units	Conditions
40*	Tt0H	T0CKI High Pulse Width	No Prescaler	0.5TCY + 20	—	—	ns	Must also meet parameter 42
			With Prescaler	10	—	—	ns	
41*	Tt0L	T0CKI Low Pulse Width	No Prescaler	0.5TCY + 20	—	—	ns	Must also meet parameter 42
			With Prescaler	10	—	—	ns	
42*	Tt0P	T0CKI Period	No Prescaler	TCY + 40	—	—	ns	N = prescale value (2, 4,..., 256)
			With Prescaler	Greater of: 20 ns or $\frac{T_{CY} + 40}{N}$				

* These parameters are characterized but not tested.

† Data in "Typ" column is at 5V, 25˚C unless otherwise stated. These parameters are for design guidance only and are not tested.

© 1997 Microchip Technology Inc.

Applicable Devices	710	71	711	715

TABLE 15-6: A/D CONVERTER CHARACTERISTICS

Param No.	Sym	Characteristic		Min	Typ†	Max	Units	Conditions
A01	NR	Resolution		—	—	8 bits	bits	VREF = VDD = 5.12V, VSS ≤ VAIN ≤ VREF
A02	EABS	Absolute error	PIC16**C**71	—	—	< ±1	LSb	VREF = VDD = 5.12V, VSS ≤ VAIN ≤ VREF
			PIC16**LC**71	—	—	< ±2	LSb	VREF = VDD = 3.0V (Note 3)
A03	EIL	Integral linearity error	PIC16**C**71	—	—	< ±1	LSb	VREF = VDD = 5.12V, VSS ≤ VAIN ≤ VREF
			PIC16**LC**71	—	—	< ±2	LSb	VREF = VDD = 3.0V (Note 3)
A04	EDL	Differential linearity error	PIC16**C**71	—	—	< ±1	LSb	VREF = VDD = 5.12V, VSS ≤ VAIN ≤ VREF
			PIC16**LC**71	—	—	< ±2	LSb	VREF = VDD = 3.0V (Note 3)
A05	EFS	Full scale error	PIC16**C**71	—	—	< ±1	LSb	VREF = VDD = 5.12V, VSS ≤ VAIN ≤ VREF
			PIC16**LC**71	—	—	< ±2	LSb	VREF = VDD = 3.0V (Note 3)
A06	EOFF	Offset error	PIC16**C**71	—	—	< ±1	LSb	VREF = VDD = 5.12V, VSS ≤ VAIN ≤ VREF
			PIC16**LC**71	—	—	< ±2	LSb	VREF = VDD = 3.0V (Note 3)
A10	—	Monotonicity		—	guaranteed	—	—	VSS ≤ VAIN ≤ VREF
A20	VREF	Reference voltage		3.0V	—	VDD + 0.3	V	
A25	VAIN	Analog input voltage		VSS - 0.3	—	VREF	V	
A30	ZAIN	Recommended impedance of analog voltage source		—	—	10.0	kΩ	
A40	IAD	A/D conversion current (VDD)		—	180	—	μA	Average current consumption when A/D is on. (Note 1)
A50	IREF	VREF input current (Note 2)	PIC16**C**71	10	—	1000	μA	During VAIN acquisition. Based on differential of VHOLD to VAIN. To charge CHOLD see Section 7.1.
				—	—	40	μA	During A/D Conversion cycle
			PIC16**LC**71	—	—	1	mA	During VAIN acquisition. Based on differential of VHOLD to VAIN. To charge CHOLD see Section 7.1.
				—	—	10	μA	During A/D Conversion cycle

* These parameters are characterized but not tested.

† Data in "Typ" column is at 5V, 25°C unless otherwise stated. These parameters are for design guidance only and are not tested.

Note 1: When A/D is off, it will not consume any current other than minor leakage current. The power-down current spec includes any such leakage from the A/D module.

2: VREF current is from RA3 pin or VDD pin, whichever is selected as reference input.

3: These specifications apply if VREF = 3.0V and if VDD ≥ 3.0V. VAIN must be between VSS and VREF.

Applicable Devices	710	71	711	715

FIGURE 15-6: A/D CONVERSION TIMING

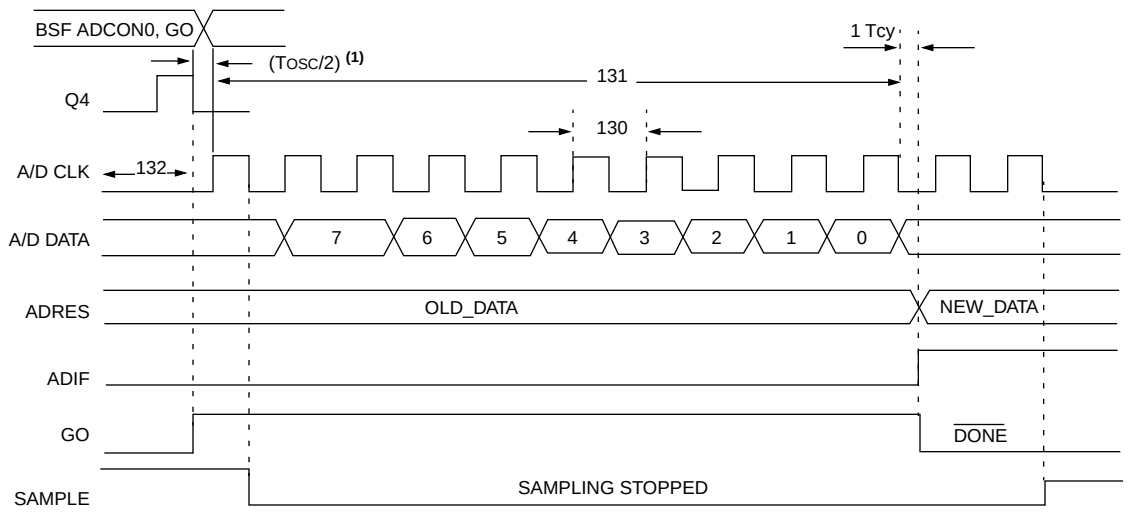

Note 1: If the A/D clock source is selected as RC, a time of TCY is added before the A/D clock starts. This allows the SLEEP instruction to be executed.

TABLE 15-7: A/D CONVERSION REQUIREMENTS

Param No.	Sym	Characteristic		Min	Typ†	Max	Units	Conditions
130	TAD	A/D clock period	PIC16**C**71	2.0	—	—	µs	TOSC based, VREF ≥ 3.0V
			PIC16**LC**71	2.0	—	—	µs	TOSC based, VREF full range
			PIC16**C**71	2.0	4.0	6.0	µs	A/D RC Mode
			PIC16**LC**71	3.0	6.0	9.0	µs	A/D RC Mode
131	TCNV	Conversion time (not including S/H time) (Note 1)		—	9.5	—	TAD	
132	TACQ	Acquisition time		Note 2	20	—	µs	
				5*	—	—	µs	The minimum time is the amplifier settling time. This may be used if the "new" input voltage has not changed by more than 1 LSb (i.e., 19.5 mV @ 5.12V) from the last sampled voltage (as stated on CHOLD).
134	TGO	Q4 to A/D clock start		—	Tosc/2§	—	—	If the A/D clock source is selected as RC, a time of TCY is added before the A/D clock starts. This allows the SLEEP instruction to be executed.
135	TSWC	Switching from convert → sample time		1.5§	—	—	TAD	

* These parameters are characterized but not tested.

† Data in "Typ" column is at 5V, 25°C unless otherwise stated. These parameters are for design guidance only and are not tested.

§ These specifications ensured by design.

Note 1: ADRES register may be read on the following TCY cycle.

2: See Section 7.1 for min conditions.

© 1997 Microchip Technology Inc.

Applicable Devices	710	71	711	715

16.0 DC AND AC CHARACTERISTICS GRAPHS AND TABLES FOR PIC16C71

The graphs and tables provided in this section are for design guidance and are not tested or guaranteed. **In some graphs or tables the data presented are outside specified operating range (e.g. outside specified VDD range). This is for information only and devices are guaranteed to operate properly only within the specified range.**

Note:	The data presented in this section is a statistical summary of data collected on units from different lots over a period of time and matrix samples. 'Typical' represents the mean of the distribution while 'max' or 'min' represents (mean + 3σ) and (mean - 3σ) respectively where σ is standard deviation.

FIGURE 16-1: TYPICAL RC OSCILLATOR FREQUENCY VS. TEMPERATURE

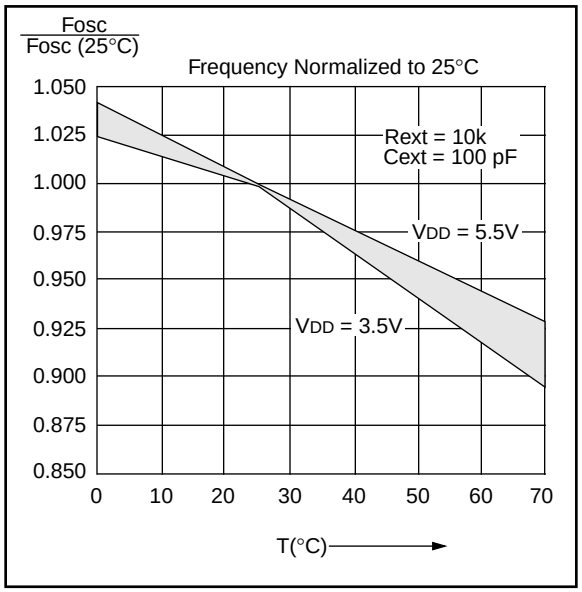

FIGURE 16-2: TYPICAL RC OSCILLATOR FREQUENCY VS. VDD

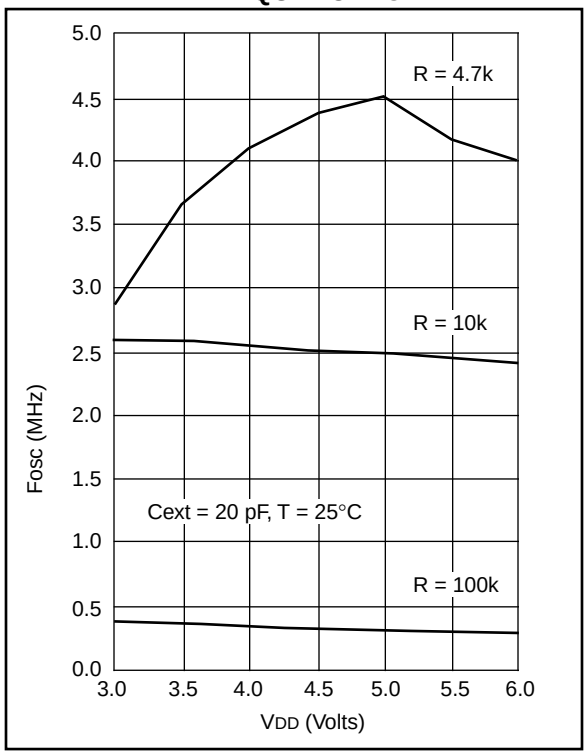

FIGURE 16-3: TYPICAL RC OSCILLATOR FREQUENCY VS. VDD

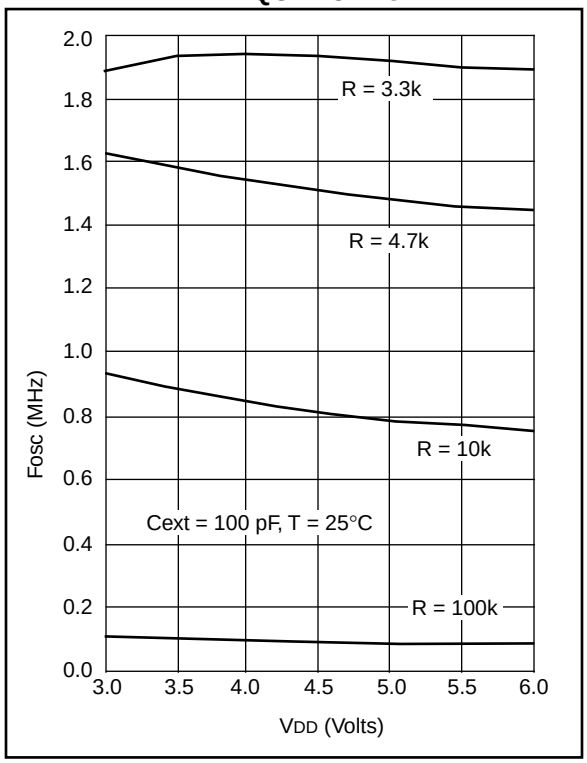

Applicable Devices	710	71	711	715

FIGURE 16-4: TYPICAL RC OSCILLATOR FREQUENCY VS. VDD

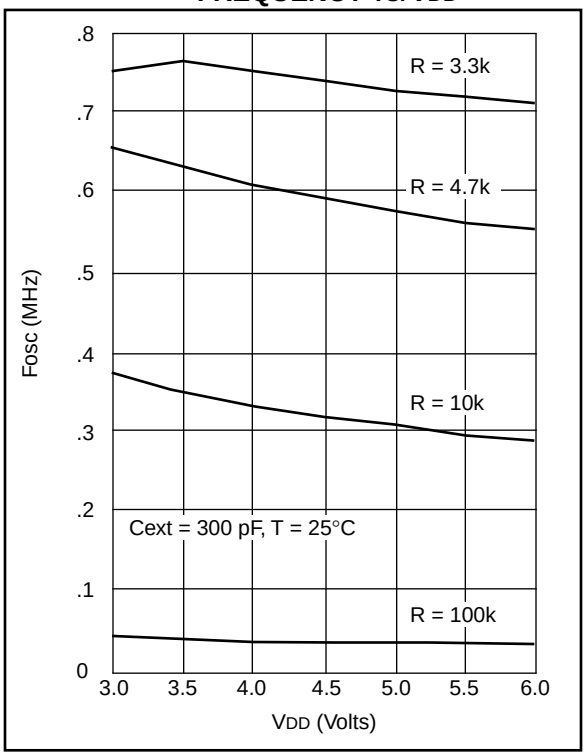

FIGURE 16-5: TYPICAL IPD VS. VDD WATCHDOG TIMER DISABLED 25°C

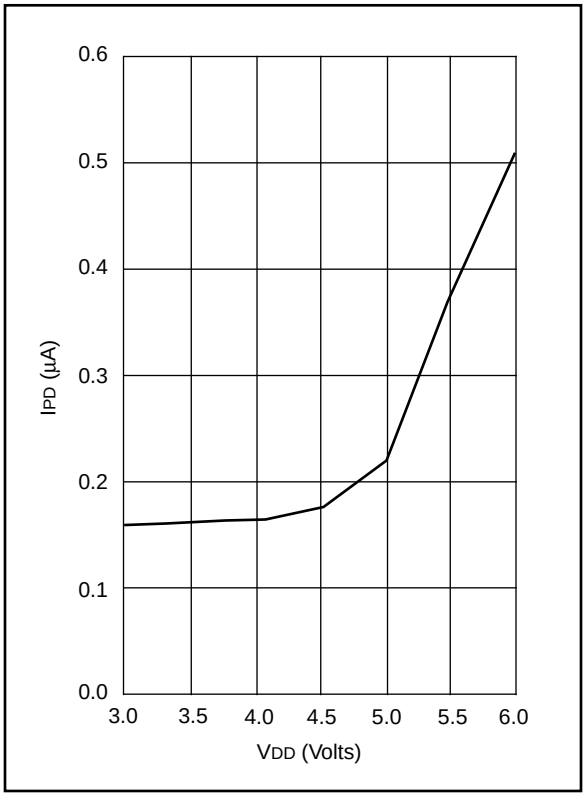

TABLE 16-1: RC OSCILLATOR FREQUENCIES

Cext	Rext	Average Fosc @ 5V, 25°C	
20 pF	4.7k	4.52 MHz	±17.35%
	10k	2.47 MHz	±10.10%
	100k	290.86 kHz	±11.90%
100 pF	3.3k	1.92 MHz	±9.43%
	4.7k	1.49 MHz	±9.83%
	10k	788.77 kHz	±10.92%
	100k	88.11 kHz	±16.03%
300 pF	3.3k	726.89 kHz	±10.97%
	4.7k	573.95 kHz	±10.14%
	10k	307.31 kHz	±10.43%
	100k	33.82 kHz	±11.24%

The percentage variation indicated here is part to part variation due to normal process distribution. The variation indicated is ±3 standard deviation from average value for VDD = 5V.

FIGURE 16-6: TYPICAL IPD VS. VDD WATCHDOG TIMER ENABLED 25°C

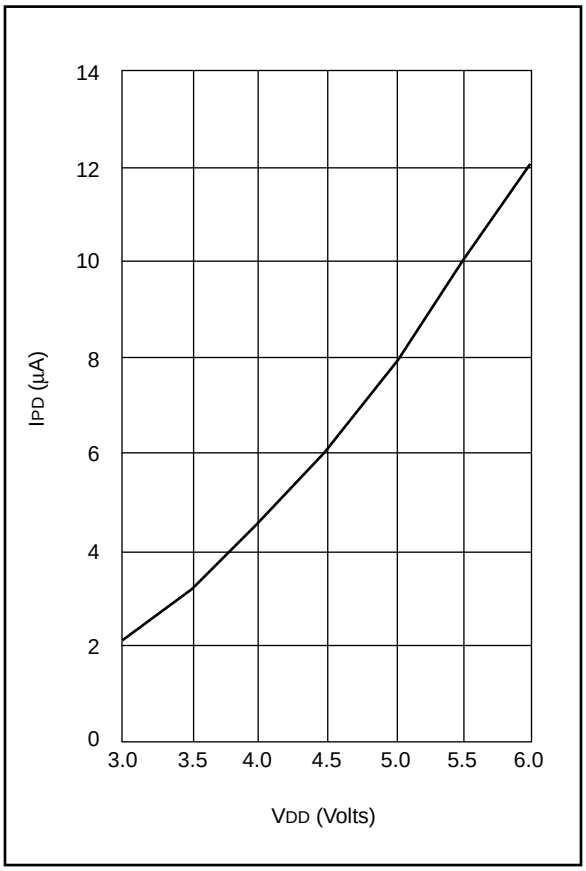

Data based on matrix samples. See first page of this section for details.

© 1997 Microchip Technology Inc.

Applicable Devices	710	71	711	715

FIGURE 16-7: MAXIMUM IPD VS. VDD WATCHDOG DISABLED

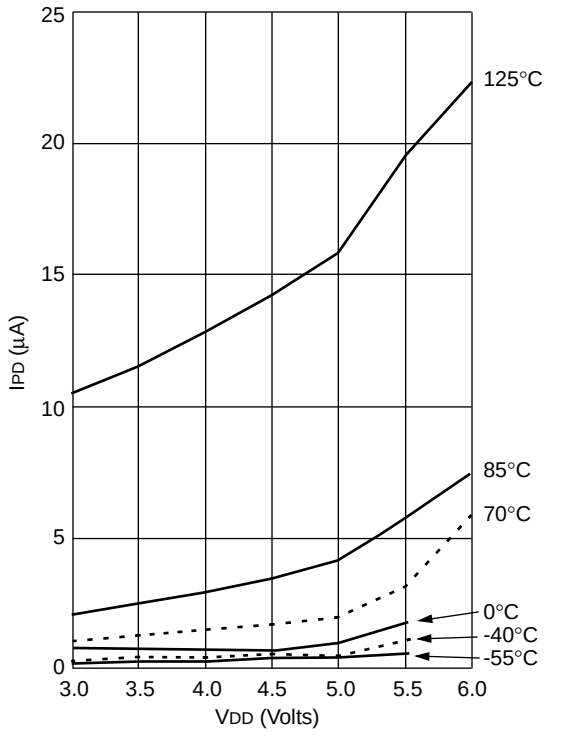

FIGURE 16-8: MAXIMUM IPD VS. VDD WATCHDOG ENABLED

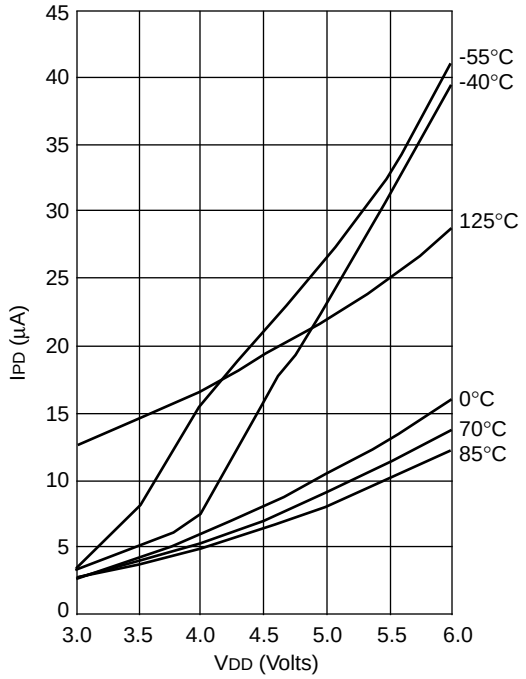

IPD, with Watchdog Timer enabled, has two components: The leakage current which increases with higher temperature and the operating current of the Watchdog Timer logic which increases with lower temperature. At -40°C, the latter dominates explaining the apparently anomalous behavior.

FIGURE 16-9: VTH (INPUT THRESHOLD VOLTAGE) OF I/O PINS VS. VDD

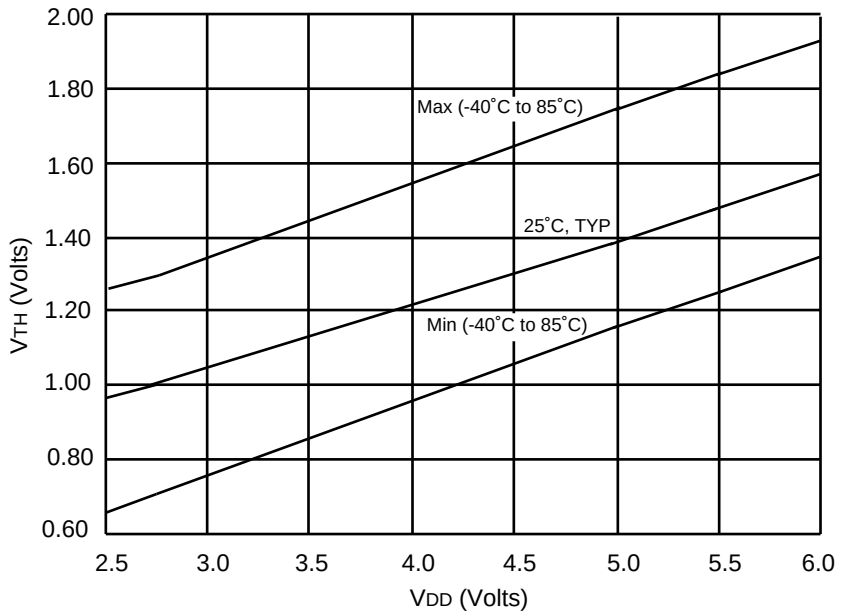

Data based on matrix samples. See first page of this section for details.

Applicable Devices	710	71	711	715

FIGURE 16-10: V_{IH}, V_{IL} OF $\overline{MCLR}$, T0CKI AND OSC1 (IN RC MODE) VS. V_{DD}

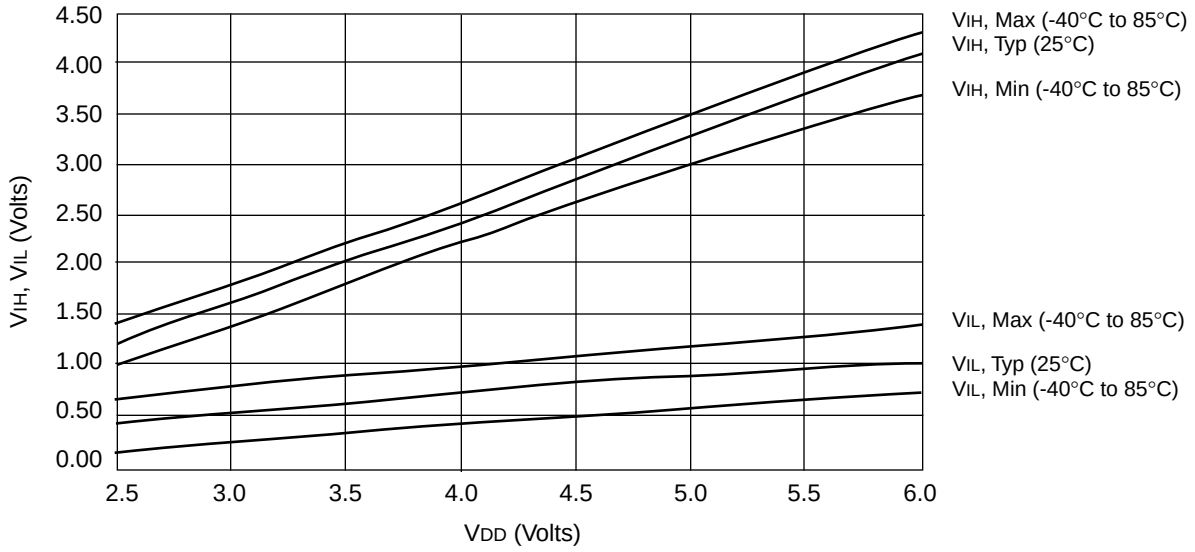

Note: These input pins have a Schmitt Trigger input buffer.

FIGURE 16-11: V_{TH} (INPUT THRESHOLD VOLTAGE) OF OSC1 INPUT (IN XT, HS, AND LP MODES) VS. V_{DD}

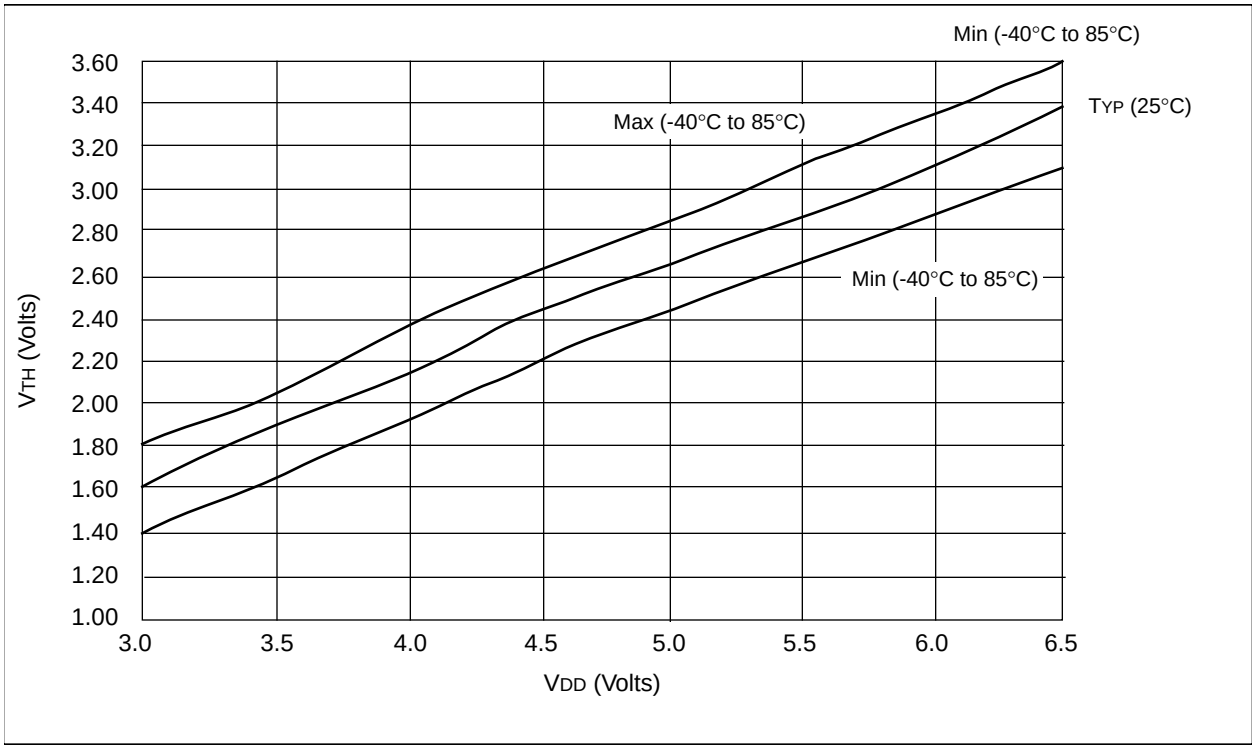

Data based on matrix samples. See first page of this section for details.

© 1997 Microchip Technology Inc.

Applicable Devices	710	71	711	715

FIGURE 16-12: TYPICAL IDD VS. FREQ (EXT CLOCK, 25°C)

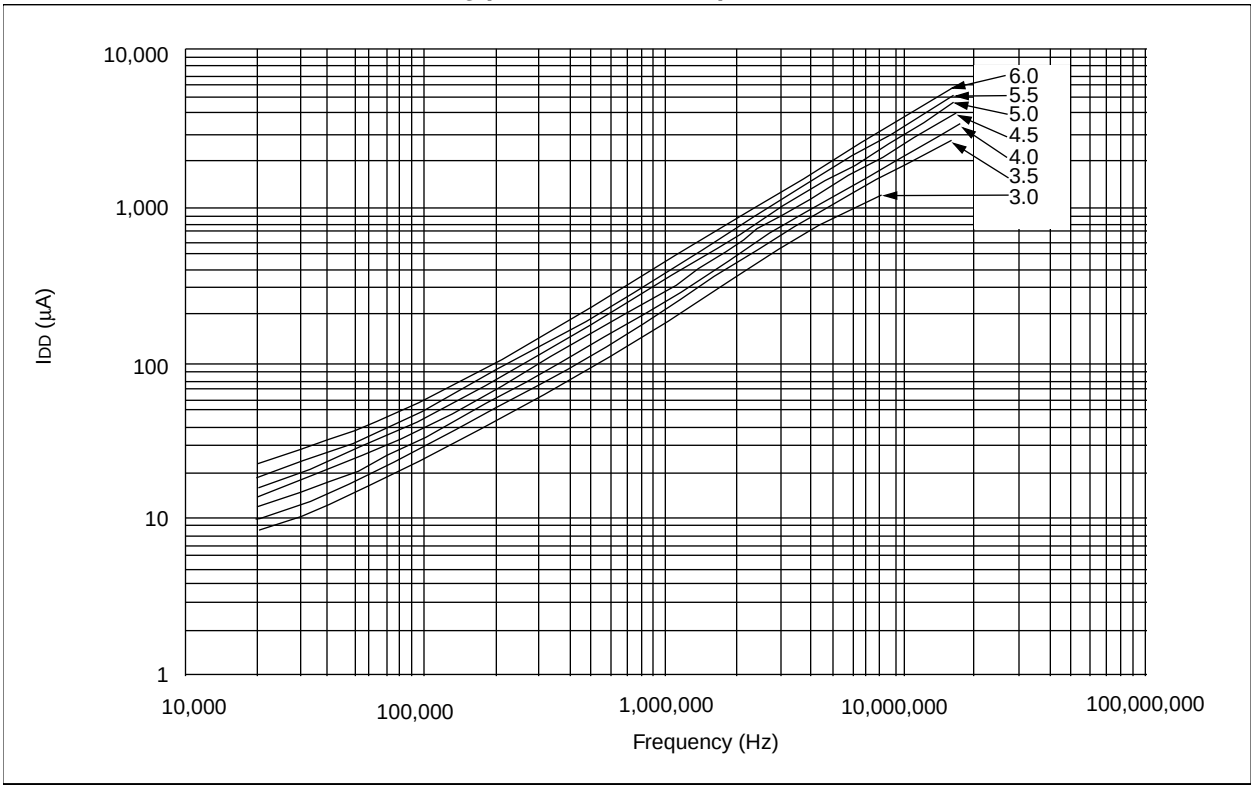

FIGURE 16-13: MAXIMUM, IDD VS. FREQ (EXT CLOCK, -40° TO +85°C)

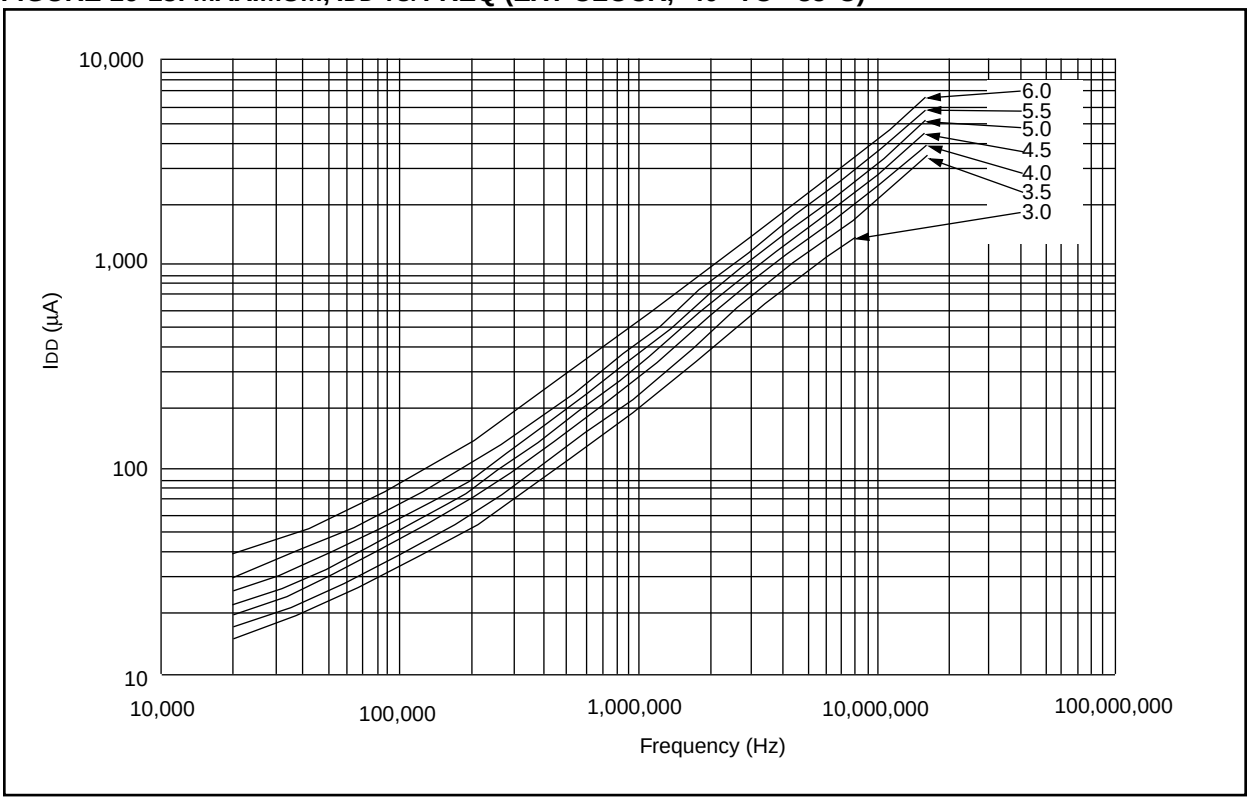

Data based on matrix samples. See first page of this section for details.

Applicable Devices	710	71	711	715

FIGURE 16-14: MAXIMUM IDD VS. FREQ WITH A/D OFF (EXT CLOCK, -55° TO +125°C)

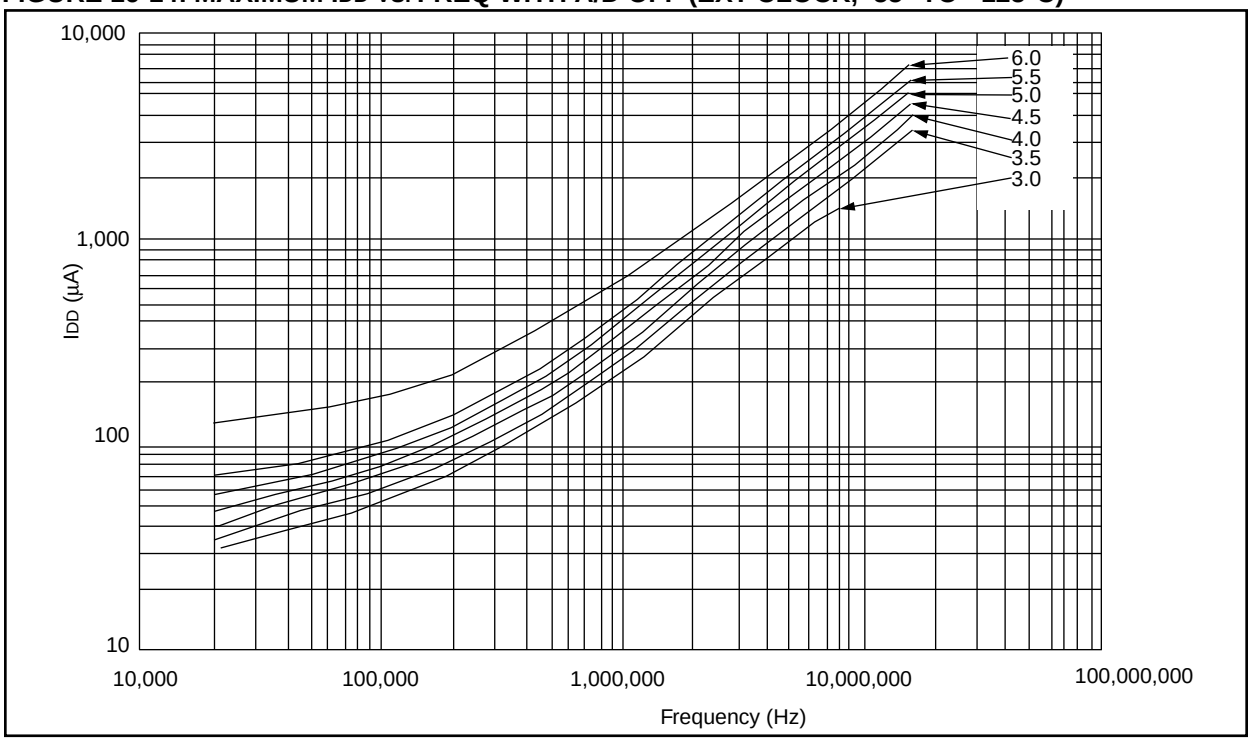

FIGURE 16-15: WDT TIMER TIME-OUT PERIOD VS. VDD

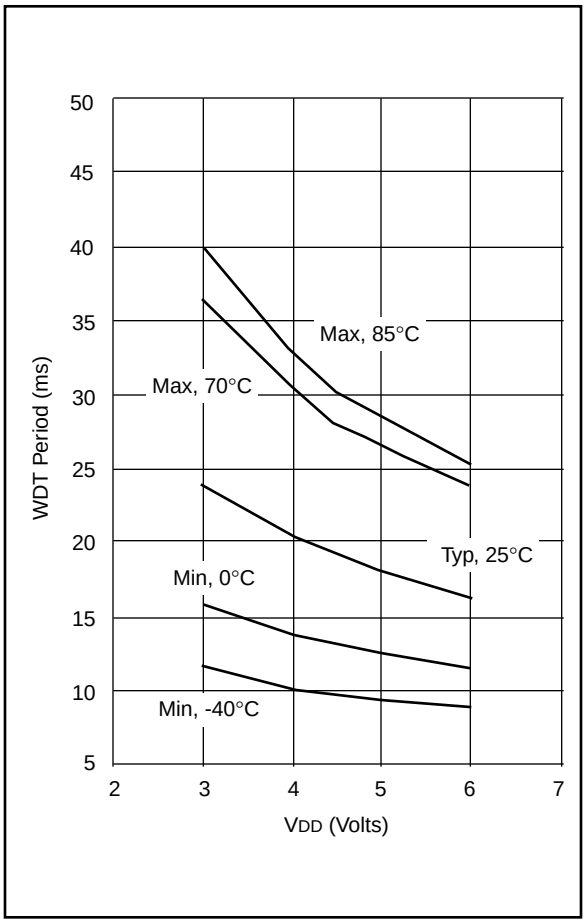

FIGURE 16-16: TRANSCONDUCTANCE (gm) OF HS OSCILLATOR VS. VDD

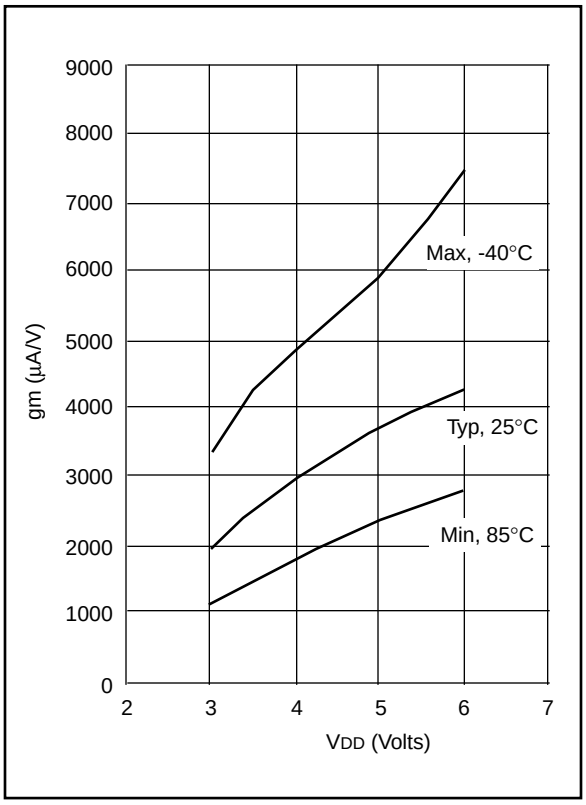

Data based on matrix samples. See first page of this section for details.

© 1997 Microchip Technology Inc.

Applicable Devices	710	71	711	715

FIGURE 16-17: TRANSCONDUCTANCE (gm) OF LP OSCILLATOR VS. VDD

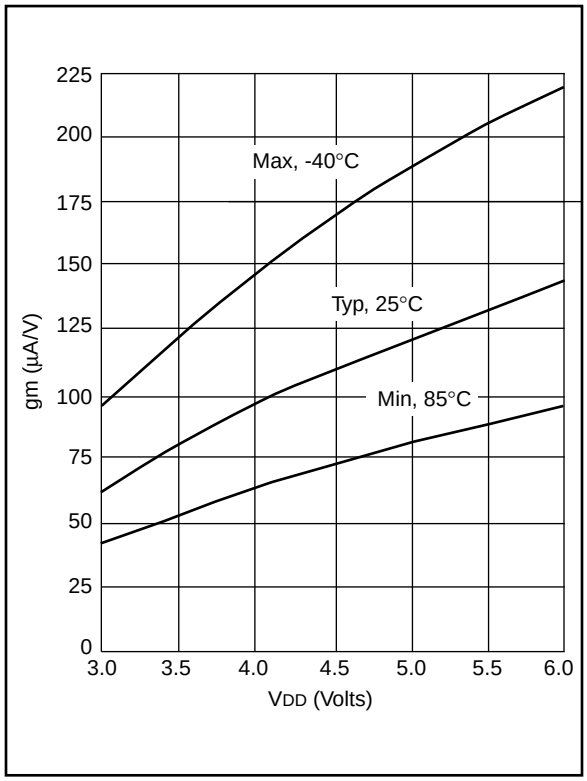

FIGURE 16-18: TRANSCONDUCTANCE (gm) OF XT OSCILLATOR VS. VDD

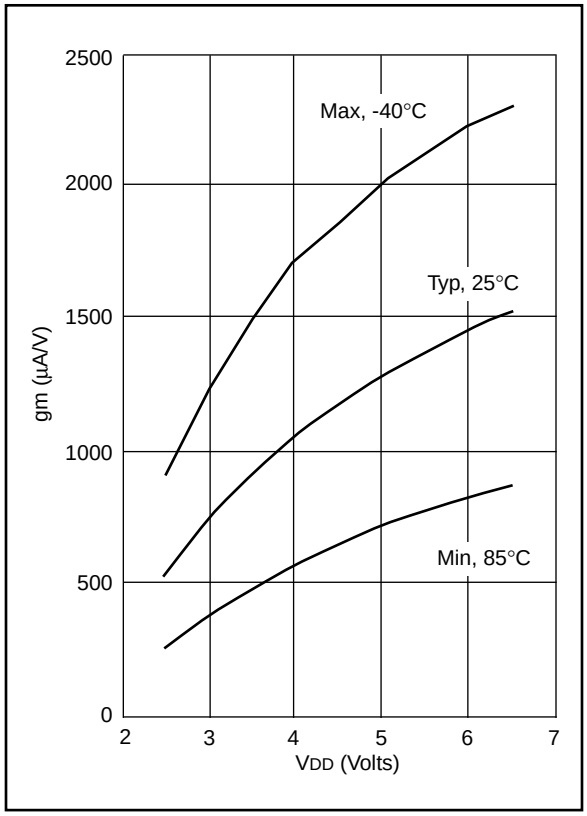

FIGURE 16-19: IOH VS. VOH, VDD = 3V

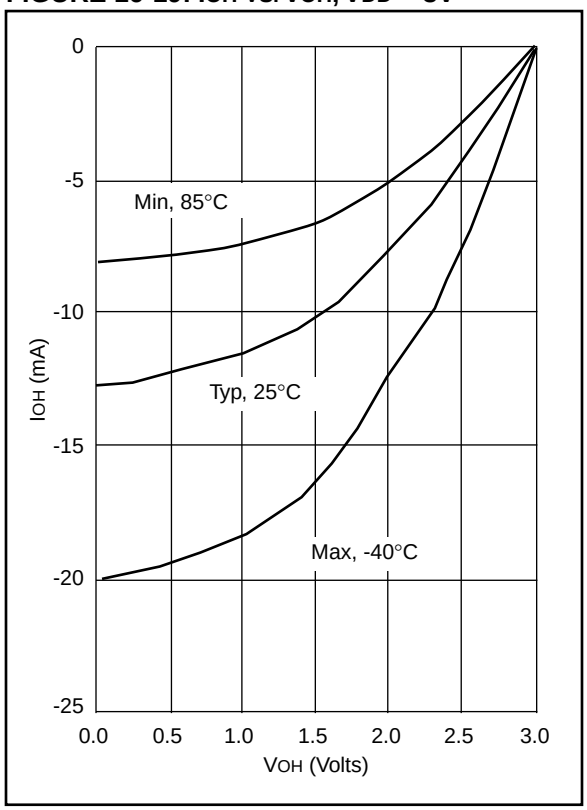

FIGURE 16-20: IOH VS. VOH, VDD = 5V

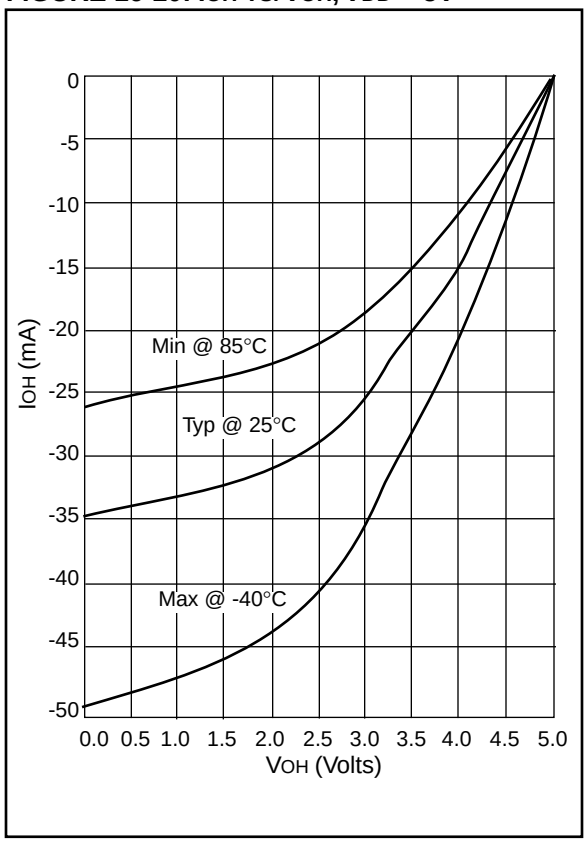

Data based on matrix samples. See first page of this section for details.

Applicable Devices	710	71	711	715

FIGURE 16-21: IOL VS. VOL, VDD = 3V

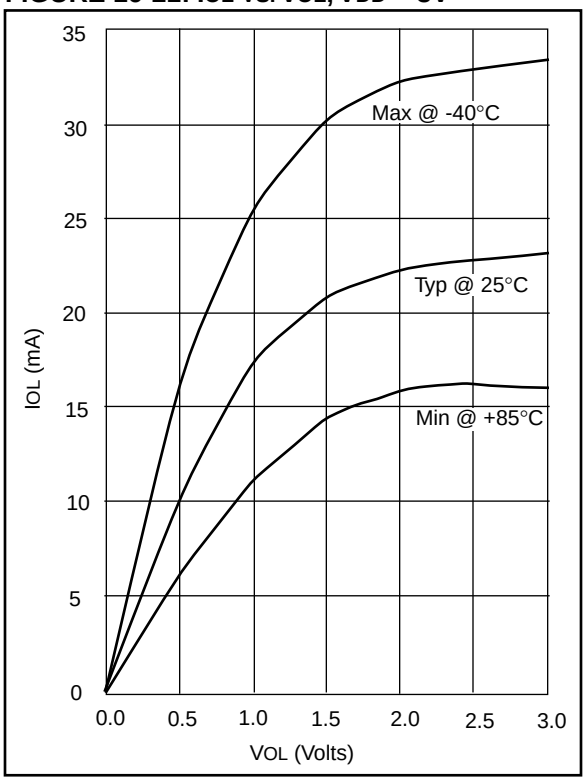

FIGURE 16-22: IOL VS. VOL, VDD = 5V

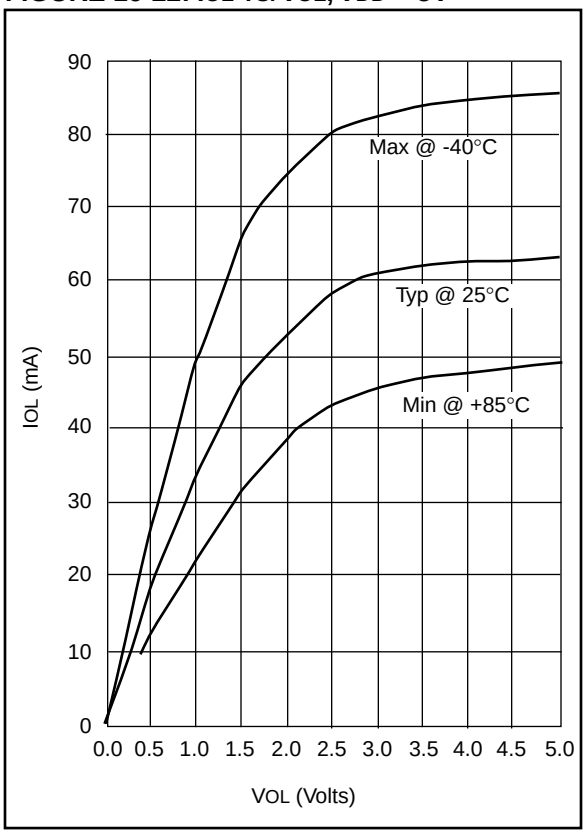

Data based on matrix samples. See first page of this section for details.

© 1997 Microchip Technology Inc.

17.0 PACKAGING INFORMATION

17.1 18-Lead Ceramic CERDIP Dual In-line with Window (300 mil) (JW)

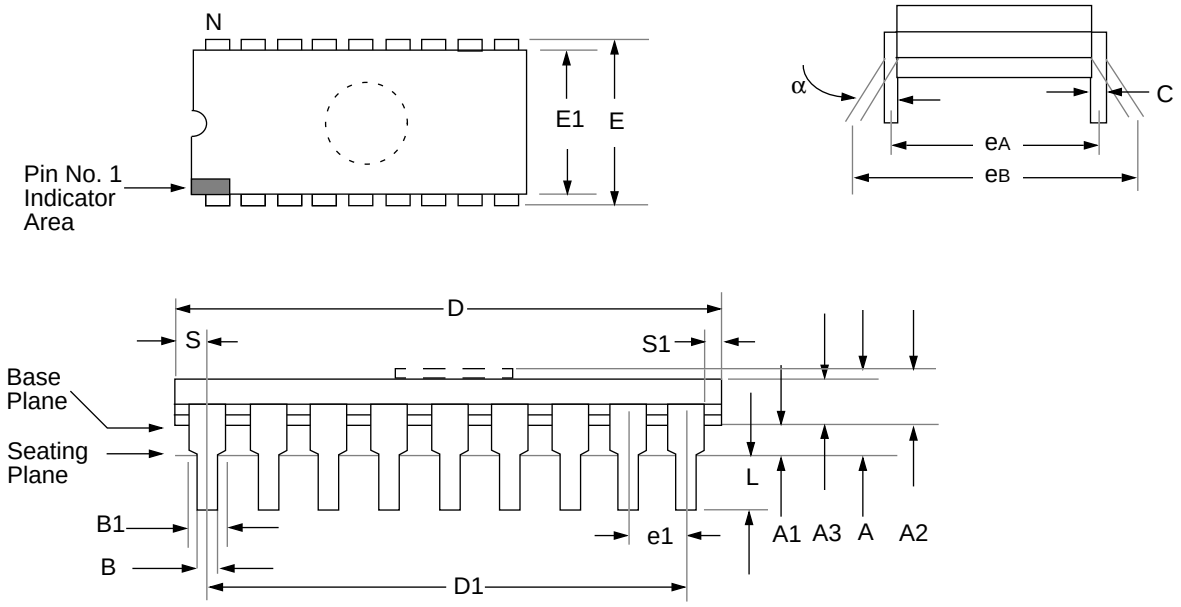

Package Group: Ceramic CERDIP Dual In-Line (CDP)						
	Millimeters			Inches		
Symbol	Min	Max	Notes	Min	Max	Notes
α	0°	10°		0°	10°	
A	—	5.080		—	0.200	
A1	0.381	1.7780		0.015	0.070	
A2	3.810	4.699		0.150	0.185	
A3	3.810	4.445		0.150	0.175	
B	0.355	0.585		0.014	0.023	
B1	1.270	1.651	**Typical**	0.050	0.065	**Typical**
C	0.203	0.381	**Typical**	0.008	0.015	**Typical**
D	22.352	23.622		0.880	0.930	
D1	20.320	20.320	**Reference**	0.800	0.800	**Reference**
E	7.620	8.382		0.300	0.330	
E1	5.588	7.874		0.220	0.310	
e1	2.540	2.540	**Reference**	0.100	0.100	**Reference**
eA	7.366	8.128	**Typical**	0.290	0.320	**Typical**
eB	7.620	10.160		0.300	0.400	
L	3.175	3.810		0.125	0.150	
N	18	18		18	18	
S	0.508	1.397		0.020	0.055	
S1	0.381	1.270		0.015	0.050	

© 1997 Microchip Technology Inc.

17.2 18-Lead Plastic Dual In-line (300 mil) (P)

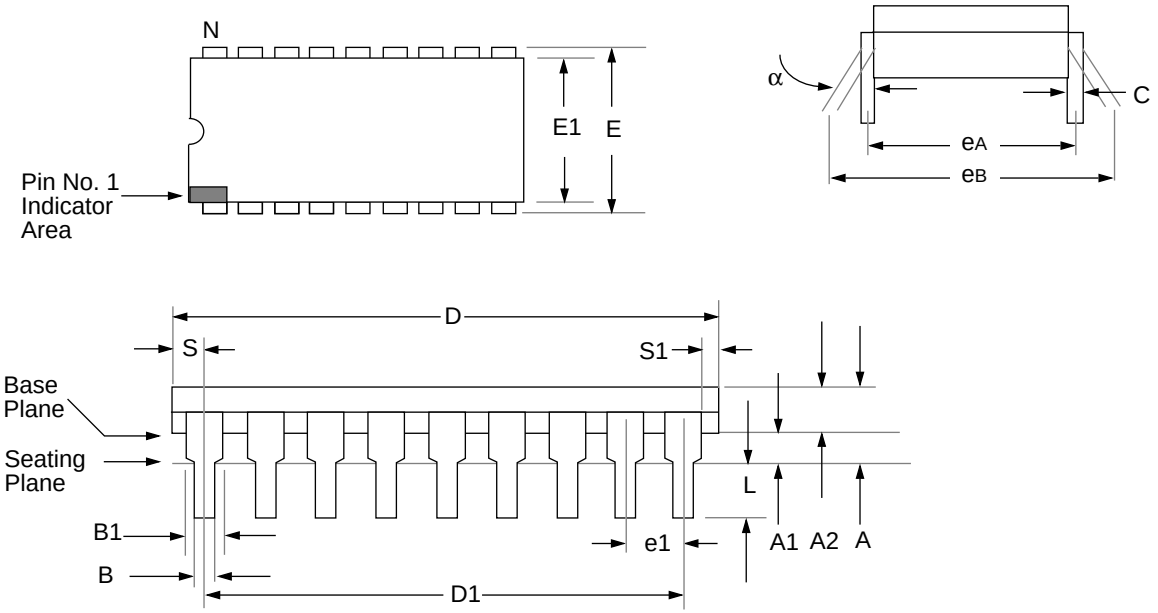

Package Group: Plastic Dual In-Line (PLA)						
	Millimeters			Inches		
Symbol	Min	Max	Notes	Min	Max	Notes
α	0°	10°		0°	10°	
A	–	4.064		–	0.160	
A1	0.381	–		0.015	–	
A2	3.048	3.810		0.120	0.150	
B	0.355	0.559		0.014	0.022	
B1	1.524	1.524	**Reference**	0.060	0.060	**Reference**
C	0.203	0.381	**Typical**	0.008	0.015	**Typical**
D	22.479	23.495		0.885	0.925	
D1	20.320	20.320	**Reference**	0.800	0.800	**Reference**
E	7.620	8.255		0.300	0.325	
E1	6.096	7.112		0.240	0.280	
e1	2.489	2.591	**Typical**	0.098	0.102	**Typical**
eA	7.620	7.620	**Reference**	0.300	0.300	**Reference**
eB	7.874	9.906		0.310	0.390	
L	3.048	3.556		0.120	0.140	
N	18	18		18	18	
S	0.889	–		0.035	–	
S1	0.127	–		0.005	–	

© 1997 Microchip Technology Inc.

17.3 18-Lead Plastic Surface Mount (SOIC - Wide, 300 mil Body)(SO)

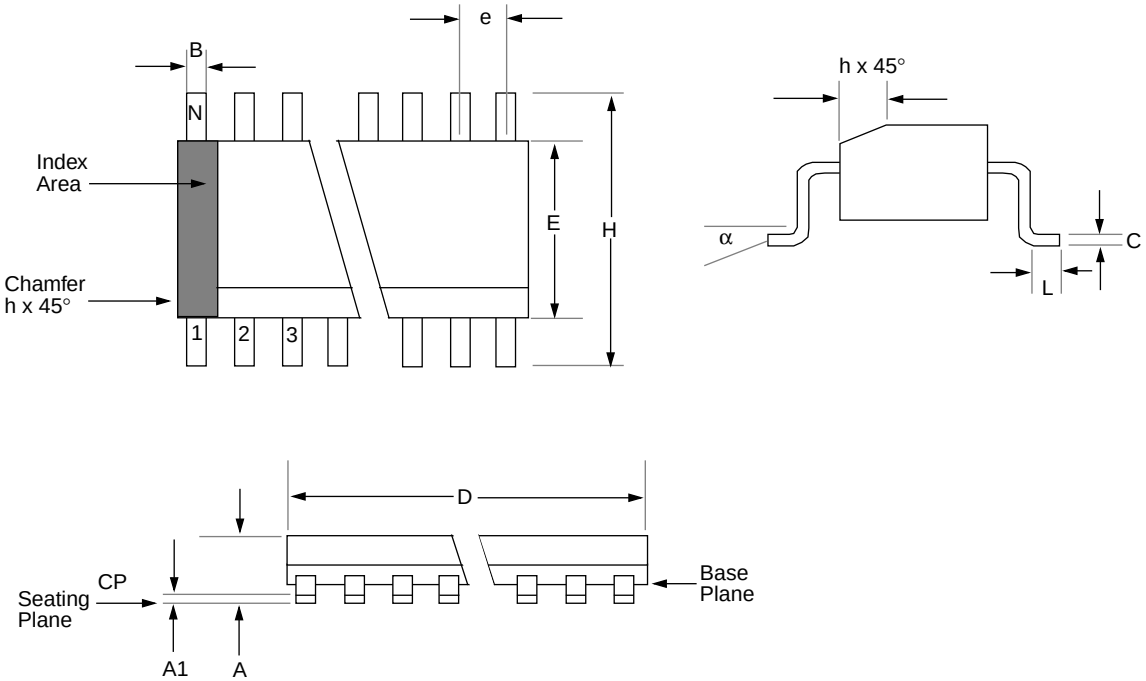

Package Group: Plastic SOIC (SO)						
	Millimeters			Inches		
Symbol	Min	Max	Notes	Min	Max	Notes
α	0°	8°		0°	8°	
A	2.362	2.642		0.093	0.104	
A1	0.101	0.300		0.004	0.012	
B	0.355	0.483		0.014	0.019	
C	0.241	0.318		0.009	0.013	
D	11.353	11.735		0.447	0.462	
E	7.416	7.595		0.292	0.299	
e	1.270	1.270	**Reference**	0.050	0.050	**Reference**
H	10.007	10.643		0.394	0.419	
h	0.381	0.762		0.015	0.030	
L	0.406	1.143		0.016	0.045	
N	18	18		18	18	
CP	–	0.102		–	0.004	

17.4 20-Lead Plastic Surface Mount (SSOP - 209 mil Body 5.30 mm) (SS)

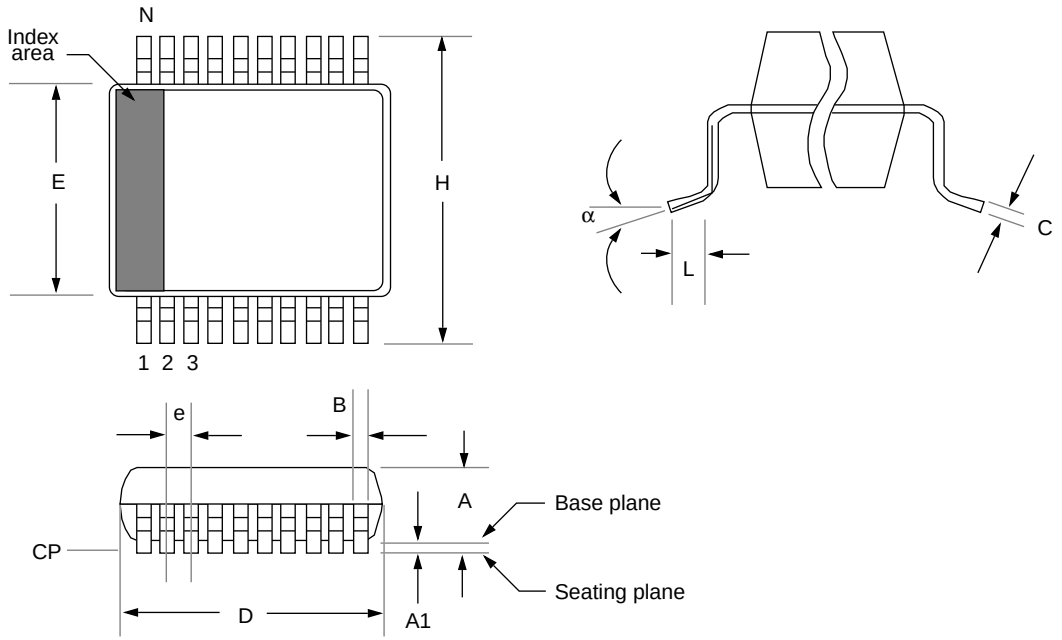

Package Group: Plastic SSOP						
	Millimeters			Inches		
Symbol	Min	Max	Notes	Min	Max	Notes
α	0°	8°		0°	8°	
A	1.730	1.990		0.068	0.078	
A1	0.050	0.210		0.002	0.008	
B	0.250	0.380		0.010	0.015	
C	0.130	0.220		0.005	0.009	
D	7.070	7.330		0.278	0.289	
E	5.200	5.380		0.205	0.212	
e	0.650	0.650	**Reference**	0.026	0.026	**Reference**
H	7.650	7.900		0.301	0.311	
L	0.550	0.950		0.022	0.037	
N	20	20		20	20	
CP	-	0.102		-	0.004	

Note 1: Dimensions D1 and E1 do not include mold protrusion. Allowable mold protrusion is 0.25m/m (0.010”) per side. D1 and E1 dimensions including mold mismatch.
2: Dimension “b” does not include Dambar protrusion, allowable Dambar protrusion shall be 0.08m/m (0.003”)max.
3: This outline conforms to JEDEC MS-026.

© 1997 Microchip Technology Inc.

17.5 Package Marking Information

18-Lead PDIP

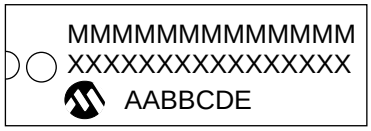

Example

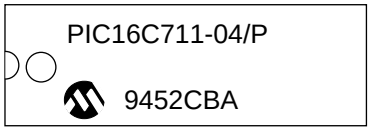

18-Lead SOIC

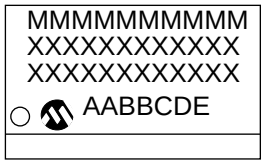

Example

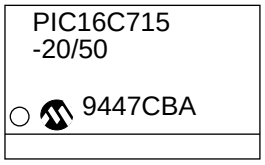

18-Lead CERDIP Windowed

Example

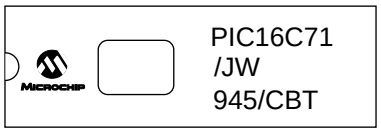

20-Lead SSOP

Example

Legend:	MM...M	Microchip part number information
	XX...X	Customer specific information*
	AA	Year code (last 2 digits of calender year)
	BB	Week code (week of January 1 is week '01')
	C	Facility code of the plant at which wafer is manufactured. C = Chandler, Arizona, U.S.A. S = Tempe, Arizona, U.S.A.
	D_1	Mask revision number for microcontroller
	E	Assembly code of the plant or country of origin in which part was assembled.
Note:	In the event the full Microchip part number cannot be marked on one line, it will be carried over to the next line thus limiting the number of available characters for customer specific information.	

* Standard OTP marking consists of Microchip part number, year code, week code, facility code, mask revision number, and assembly code. For OTP marking beyond this, certain price adders apply. Please check with your Microchip Sales Office. For QTP devices, any special marking adders are included in QTP price.

NOTES:

© 1997 Microchip Technology Inc.

APPENDIX A:

The following are the list of modifications over the PIC16C5X microcontroller family:

1. Instruction word length is increased to 14-bits. This allows larger page sizes both in program memory (1K now as opposed to 512 before) and register file (68 bytes now versus 32 bytes before).
2. A PC high latch register (PCLATH) is added to handle program memory paging. Bits PA2, PA1, PA0 are removed from STATUS register.
3. Data memory paging is redefined slightly. STATUS register is modified.
4. Four new instructions have been added: `RETURN`, `RETFIE`, `ADDLW`, and `SUBLW`. Two instructions `TRIS` and `OPTION` are being phased out although they are kept for compatibility with PIC16C5X.
5. OPTION and TRIS registers are made addressable.
6. Interrupt capability is added. Interrupt vector is at 0004h.
7. Stack size is increased to 8 deep.
8. Reset vector is changed to 0000h.
9. Reset of all registers is revisited. Five different reset (and wake-up) types are recognized. Registers are reset differently.
10. Wake up from SLEEP through interrupt is added.
11. Two separate timers, Oscillator Start-up Timer (OST) and Power-up Timer (PWRT) are included for more reliable power-up. These timers are invoked selectively to avoid unnecessary delays on power-up and wake-up.
12. PORTB has weak pull-ups and interrupt on change feature.
13. T0CKI pin is also a port pin (RA4) now.
14. FSR is made a full eight bit register.
15. “In-circuit serial programming” is made possible. The user can program PIC16CXX devices using only five pins: V_{DD}, V_{SS}, $\overline{MCLR}$/V_{PP}, RB6 (clock) and RB7 (data in/out).
16. PCON status register is added with a Power-on Reset status bit ($\overline{POR}$).
17. Code protection scheme is enhanced such that portions of the program memory can be protected, while the remainder is unprotected.
18. Brown-out protection circuitry has been added. Controlled by configuration word bit BODEN. Brown-out reset ensures the device is placed in a reset condition if V_{DD} dips below a fixed setpoint.

APPENDIX B: COMPATIBILITY

To convert code written for PIC16C5X to PIC16CXX, the user should take the following steps:

1. Remove any program memory page select operations (PA2, PA1, PA0 bits) for `CALL`, `GOTO`.
2. Revisit any computed jump operations (write to PC or add to PC, etc.) to make sure page bits are set properly under the new scheme.
3. Eliminate any data memory page switching. Redefine data variables to reallocate them.
4. Verify all writes to STATUS, OPTION, and FSR registers since these have changed.
5. Change reset vector to 0000h.

APPENDIX C: WHAT'S NEW

1. Consolidated all pin compatible 18-pin A/D based devices into one data sheet.

APPENDIX D: WHAT'S CHANGED

1. Minor changes, spelling and grammatical changes.
2. Low voltage operation on the PIC16LC710/711/715 has been reduced from 3.0V to 2.5V.
3. Part numbers of the PIC16C70 and PIC16C71A have changed to PIC16C710 and PIC16C711, respectively.

© 1997 Microchip Technology Inc.

INDEX

A

A/D
- Accuracy/Error 44
- ADIF bit 39
- Analog Input Model Block Diagram 40
- Analog-to-Digital Converter 37
- Configuring Analog Port Pins 41
- Configuring the Interrupt 39
- Configuring the Module 39
- Connection Considerations 44
- Conversion Clock 41
- Conversion Time 43
- Conversions 42
- Converter Characteristics 99, 122, 145
- Delays 40
- Effects of a Reset 44
- Equations 40
- Faster Conversion - Lower Resolution Trade-off 43
- Flowchart of A/D Operation 45
- GO/$\overline{\text{DONE}}$ bit 39
- Internal Sampling Switch (Rss) Impedence 40
- Minimum Charging Time 40
- Operation During Sleep 44
- Sampling Requirements 40
- Source Impedence 40
- Time Delays 40
- Transfer Function 45

Absolute Maximum Ratings 89, 111, 135

AC Characteristics
- PIC16C710 101
- PIC16C711 101
- PIC16C715 125

ADCON0 Register 37

ADCON1 37

ADCON1 Register 14, 37

ADCS0 bit 37

ADCS1 bit 37

ADIE bit 19, 20

ADIF bit 21, 37

ADON bit 37

ADRES Register 15, 37, 39

ALU 7

Application Notes
- AN546 37
- AN552 27
- AN556 23
- AN607, Power-up Trouble Shooting 53

Architecture
- Harvard 7
- Overview 7
- von Neumann 7

Assembler
- MPASM Assembler 86

B

Block Diagrams
- Analog Input Model 40
- On-Chip Reset Circuit 52
- PIC16C71X 8
- RA3/RA0 Port Pins 25
- RA4/T0CKI Pin 25
- RB3:RB0 Port Pins 27
- RB7:RB4 Pins 28
- RB7:RB4 Port Pins 28
- Timer0 31
- Timer0/WDT Prescaler 34
- Watchdog Timer 65

BODEN bit 48

$\overline{\text{BOR}}$ bit 22, 54

Brown-out Reset (BOR) 53

C

C bit 17

C16C71 47

Carry bit 7

CHS0 bit 37

CHS1 bit 37

Clocking Scheme 10

Code Examples
- Call of a Subroutine in Page 1 from Page 0 24
- Changing Prescaler (Timer0 to WDT) 35
- Changing Prescaler (WDT to Timer0) 35
- Doing an A/D Conversion 42
- I/O Programming 30
- Indirect Addressing 24
- Initializing PORTA 25
- Initializing PORTB 27
- Saving STATUS and W Registers in RAM 64

Code Protection 47, 67

Computed GOTO 23

Configuration Bits 47

CP0 bit 47, 48

CP1 bit 48

D

DC bit 17

DC Characteristics 147
- PIC16C71 136
- PIC16C710 ..... 90, 101
- PIC16C711 ..... 90, 101
- PIC16C715 ..... 113, 125

Development Support 3, 85

Development Tools 85

Diagrams - See Block Diagrams

Digit Carry bit 7

Direct Addressing 24

E

Electrical Characteristics
- PIC16C71 135
- PIC16C710 89
- PIC16C711 89
- PIC16C715 111

External Brown-out Protection Circuit 60

External Power-on Reset Circuit 60

F

Family of Devices
- PIC16C71X 4

FOSC0 bit 47, 48

FOSC1 bit 47, 48

FSR Register 15, 16, 24

Fuzzy Logic Dev. System (*fuzzy*TECH®-MP) 87

G

General Description 3

GIE bit 19, 61

GO/$\overline{\text{DONE}}$ bit 37

I

I/O Ports
- PORTA 25
- PORTB 27
- Section 25

I/O Programming Considerations 30
ICEPIC Low-Cost PIC16CXXX In-Circuit Emulator 85
In-Circuit Serial Programming 47, 67
INDF Register 14, 16, 24
Indirect Addressing 24
Instruction Cycle 10
Instruction Flow/Pipelining 10
Instruction Format 69
Instruction Set
- ADDLW 71
- ADDWF 71
- ANDLW 71
- ANDWF 71
- BCF 72
- BSF 72
- BTFSC 72
- BTFSS 73
- CALL 73
- CLRF 74
- CLRW 74
- CLRWDT 74
- COMF 75
- DECF 75
- DECFSZ 75
- GOTO 76
- INCF 76
- INCFSZ 77
- IORLW 77
- IORWF 78
- MOVF 78
- MOVLW 78
- MOVWF 78
- NOP 79
- OPTION 79
- RETFIE 79
- RETLW 80
- RETURN 80
- RLF 81
- RRF 81
- SLEEP 82
- SUBLW 82
- SUBWF 83
- SWAPF 83
- TRIS 83
- XORLW 84
- XORWF 84
- Section 69
- Summary Table 70

INT Interrupt 63
INTCON Register 19
INTE bit 19
INTEDG bit 18, 63
Internal Sampling Switch (Rss) Impedence 40
Interrupts 47
- A/D 61
- External 61
- PORTB Change 61
- PortB Change 63
- RB7:RB4 Port Change 27
- Section 61
- TMR0 63
- TMR0 Overflow 61

INTF bit 19
IRP bit 17

K

KeeLoq® Evaluation and Programming Tools 87

L

Loading of PC 23
LP 54

M

$\overline{\text{MCLR}}$ 52, 56
Memory
- Data Memory 12
- Program Memory 11
- Register File Maps
  - PIC16C71 12
  - PIC16C710 12
  - PIC16C711 13
  - PIC16C715 13

MP-DriveWay™ - Application Code Generator 87
MPEEN bit 22, 48
MPLAB™ C 87
MPLAB™ Integrated Development Environment Software 86

O

OPCODE 69
OPTION Register 18
Orthogonal 7
OSC selection 47
Oscillator
- HS 49, 54
- LP 49, 54
- RC 49
- XT 49, 54

Oscillator Configurations 49
Oscillator Start-up Timer (OST) 53

P

Packaging
- 18-Lead CERDIP w/Window 155
- 18-Lead PDIP 156
- 18-Lead SOIC 157
- 20-Lead SSOP 158

Paging, Program Memory 23
PCL Register 14, 15, 16, 23
PCLATH 57, 58
PCLATH Register 14, 15, 16, 23
PCON Register 22, 54
$\overline{\text{PD}}$ bit 17, 52, 55
$\overline{\text{PER}}$ bit 22
PIC16C71 147
- AC Characteristics 147

PICDEM-1 Low-Cost PIC16/17 Demo Board 86
PICDEM-2 Low-Cost PIC16CXX Demo Board 86
PICDEM-3 Low-Cost PIC16CXXX Demo Board 86
PICMASTER® In-Circuit Emulator 85
PICSTART® Plus Entry Level Development System 85
PIE1 Register 20
Pin Functions
- $\overline{\text{MCLR}}$/VPP 9
- OSC1/CLKIN 9
- OSC2/CLKOUT 9
- RA0/AN0 9
- RA1/AN1 9

© 1997 Microchip Technology Inc.

RA2/AN2 9
RA3/AN3/VREF 9
RA4/T0CKI 9
RB0/INT 9
RB1 9
RB2 9
RB3 9
RB4 9
RB5 9
RB6 9
RB7 9
VDD 9
VSS 9
Pinout Descriptions
PIC16C71 9
PIC16C710 9
PIC16C711 9
PIC16C715 9
PIR1 Register 21
POP 23
POR 53, 54
Oscillator Start-up Timer (OST) 47, 53
Power Control Register (PCON) 54
Power-on Reset (POR) 47, 53, 57, 58
Power-up Timer (PWRT) 47, 53
Time-out Sequence 54
Time-out Sequence on Power-up 59
$\overline{\text{TO}}$ 52, 55
$\overline{\text{POR}}$ bit 22, 54
Port RB Interrupt 63
PORTA 57, 58
PORTA Register 14, 15, 25
PORTB 57, 58
PORTB Register 14, 15, 27
Power-down Mode (SLEEP) 66
Prescaler, Switching Between Timer0 and WDT 35
PRO MATE® II Universal Programmer 85
Program Branches 7
Program Memory
Paging 23
Program Memory Maps
PIC16C71 11
PIC16C710 11
PIC16C711 11
PIC16C715 11
Program Verification 67
PS0 bit 18
PS1 bit 18
PS2 bit 18
PSA bit 18
PUSH 23
PWRT
Power-up Timer (PWRT) 53
PWRTE bit 47, 48

R

RBIE bit 19
RBIF bit 19, 27, 63
$\overline{\text{RBPU}}$ bit 18
RC 54
RC Oscillator 51, 54
Read-Modify-Write 30
Register File 12
Registers
Maps
PIC16C71 12
PIC16C710 12
PIC16C711 13
PIC16C715 13
Reset Conditions 56
Summary ..... 14–??
Reset 47, 52
Reset Conditions for Special Registers 56
RP0 bit 12, 17
RP1 bit 17

S

SEEVAL® Evaluation and Programming System 87
Services
One-Time-Programmable (OTP) Devices 5
Quick-Turnaround-Production (QTP) Devices 5
Serialized Quick-Turnaround Production (SQTP) Devices 5
SLEEP 47, 52
Software Simulator (MPLAB™ SIM) 87
Special Features of the CPU 47
Special Function Registers
PIC16C71 14
PIC16C710 14
PIC16C711 14
Special Function Registers, Section 14
Stack 23
Overflows 23
Underflow 23
STATUS Register 17

T

T0CS bit 18
T0IE bit 19
T0IF bit 19
TAD 41
Timer0
RTCC 57, 58
Timers
Timer0
Block Diagram 31
External Clock 33
External Clock Timing 33
Increment Delay 33
Interrupt 31
Interrupt Timing 32
Prescaler 34
Prescaler Block Diagram 34
Section 31
Switching Prescaler Assignment 35
Synchronization 33
T0CKI 33
T0IF 63
Timing 31
TMR0 Interrupt 63
Timing Diagrams
A/D Conversion 100, 124, 146
Brown-out Reset 53, 97
CLKOUT and I/O 96, 119, 142
External Clock Timing 95, 118, 141
Power-up Timer 97, 143
Reset 97, 143
Start-up Timer 97, 143
Time-out Sequence 59
Timer0 ..... 31, 98, 121, 144
Timer0 Interrupt Timing 32
Timer0 with External Clock 33
Wake-up from SLEEP through Interrupt 67
Watchdog Timer 97, 143

$\overline{TO}$ bit 17
TOSE bit 18
TRISA Register 14, 16, 25
TRISB Register 14, 16, 27
Two's Complement 7

U

Upward Compatibility 3
UV Erasable Devices 5

W

W Register
    ALU 7
Wake-up from SLEEP 66
Watchdog Timer (WDT) 47, 52, 56, 65
WDT 56
    Block Diagram 65
    Programming Considerations 65
    Timeout 57, 58
WDT Period 65
WDTE bit 47, 48

Z

Z bit 17
Zero bit 7

LIST OF EXAMPLES

Example 3-1: Instruction Pipeline Flow 10
Example 4-1: Call of a Subroutine in Page 1 from Page 0 24
Example 4-2: Indirect Addressing 24
Example 5-1: Initializing PORTA 25
Example 5-2: Initializing PORTB 27
Example 5-3: Read-Modify-Write Instructions on an I/O Port 30
Example 6-1: Changing Prescaler (Timer0→WDT) 35
Example 6-2: Changing Prescaler (WDT→Timer0) 35
Equation 7-1: A/D Minimum Charging Time 40
Example 7-1: Calculating the Minimum Required Aquisition Time 40
Example 7-2: A/D Conversion 42
Example 7-3: 4-bit vs. 8-bit Conversion Times 43
Example 8-1: Saving STATUS and W Registers in RAM 64

LIST OF FIGURES

Figure 3-1: PIC16C71X Block Diagram 8
Figure 3-2: Clock/Instruction Cycle 10
Figure 4-1: PIC16C710 Program Memory Map and Stack 11
Figure 4-2: PIC16C71/711 Program Memory Map and Stack 11
Figure 4-3: PIC16C715 Program Memory Map and Stack 11
Figure 4-4: PIC16C710/71 Register File Map 12
Figure 4-5: PIC16C711 Register File Map 13
Figure 4-6: PIC16C715 Register File Map 13
Figure 4-7: Status Register (Address 03h, 83h) 17
Figure 4-8: OPTION Register (Address 81h, 181h) 18
Figure 4-9: INTCON Register (Address 0Bh, 8Bh) 19
Figure 4-10: PIE1 Register (Address 8Ch) 20
Figure 4-11: PIR1 Register (Address 0Ch) 21
Figure 4-12: PCON Register (Address 8Eh), PIC16C710/711 22
Figure 4-13: PCON Register (Address 8Eh), PIC16C715 22
Figure 4-14: Loading of PC In Different Situations 23
Figure 4-15: Direct/Indirect Addressing 24
Figure 5-1: Block Diagram of RA3:RA0 Pins 25
Figure 5-2: Block Diagram of RA4/T0CKI Pin 25
Figure 5-3: Block Diagram of RB3:RB0 Pins 27
Figure 5-4: Block Diagram of RB7:RB4 Pins (PIC16C71) 28
Figure 5-5: Block Diagram of RB7:RB4 Pins (PIC16C710/711/715) 28
Figure 5-6: Successive I/O Operation 30
Figure 6-1: Timer0 Block Diagram 31
Figure 6-2: Timer0 Timing: Internal Clock/ No Prescale 31
Figure 6-3: Timer0 Timing: Internal Clock/ Prescale 1:2 32
Figure 6-4: Timer0 Interrupt Timing 32
Figure 6-5: Timer0 Timing with External Clock 33
Figure 6-6: Block Diagram of the Timer0/ WDT Prescaler 34
Figure 7-1: ADCON0 Register (Address 08h), PIC16C710/71/711 37
Figure 7-2: ADCON0 Register (Address 1Fh), PIC16C715 38

© 1997 Microchip Technology Inc.

Figure 7-3: ADCON1 Register, PIC16C710/71/711 (Address 88h), PIC16C715 (Address 9Fh) 38
Figure 7-4: A/D Block Diagram 39
Figure 7-5: Analog Input Model 40
Figure 7-6: A/D Transfer Function 45
Figure 7-7: Flowchart of A/D Operation 45
Figure 8-1: Configuration Word for PIC16C71 47
Figure 8-2: Configuration Word, PIC16C710/711 48
Figure 8-3: Configuration Word, PIC16C715 48
Figure 8-4: Crystal/Ceramic Resonator Operation (HS, XT or LP OSC Configuration) 49
Figure 8-5: External Clock Input Operation (HS, XT or LP OSC Configuration) 49
Figure 8-6: External Parallel Resonant Crystal Oscillator Circuit 51
Figure 8-7: External Series Resonant Crystal Oscillator Circuit 51
Figure 8-8: RC Oscillator Mode 51
Figure 8-9: Simplified Block Diagram of On-chip Reset Circuit 52
Figure 8-10: Brown-out Situations 53
Figure 8-11: Time-out Sequence on Power-up ($\overline{MCLR}$ not Tied to VDD): Case 1 59
Figure 8-12: Time-out Sequence on Power-up ($\overline{MCLR}$ Not Tied To VDD): Case 2 59
Figure 8-13: Time-out Sequence on Power-up ($\overline{MCLR}$ Tied to VDD) 59
Figure 8-14: External Power-on Reset Circuit (for Slow VDD Power-up) 60
Figure 8-15: External Brown-out Protection Circuit 1 60
Figure 8-16: External Brown-out Protection Circuit 2 60
Figure 8-17: Interrupt Logic, PIC16C710, 71, 711 62
Figure 8-18: Interrupt Logic, PIC16C715 62
Figure 8-19: INT Pin Interrupt Timing 63
Figure 8-20: Watchdog Timer Block Diagram 65
Figure 8-21: Summary of Watchdog Timer Registers 65
Figure 8-22: Wake-up from Sleep Through Interrupt 67
Figure 8-23: Typical In-Circuit Serial Programming Connection 67
Figure 9-1: General Format for Instructions 69
Figure 11-1: Load Conditions 94
Figure 11-2: External Clock Timing 95
Figure 11-3: CLKOUT and I/O Timing 96
Figure 11-4: Reset, Watchdog Timer, Oscillator Start-up Timer and Power-up Timer Timing 97
Figure 11-5: Brown-out Reset Timing 97
Figure 11-6: Timer0 External Clock Timings 98
Figure 11-7: A/D Conversion Timing 100
Figure 12-1: Typical IPD vs. VDD (WDT Disabled, RC Mode) 101
Figure 12-2: Maximum IPD vs. VDD (WDT Disabled, RC Mode) 101
Figure 12-3: Typical IPD vs. VDD @ 25°C (WDT Enabled, RC Mode) 102
Figure 12-4: Maximum IPD vs. VDD (WDT Enabled, RC Mode) 102
Figure 12-5: Typical RC Oscillator Frequency vs. VDD 102
Figure 12-6: Typical RC Oscillator Frequency vs. VDD 102
Figure 12-7: Typical RC Oscillator Frequency vs. VDD 102
Figure 12-8: Typical IPD vs. VDD Brown-out Detect Enabled (RC Mode) 103
Figure 12-9: Maximum IPD vs. VDD Brown-out Detect Enabled (85°C to -40°C, RC Mode) 103
Figure 12-10: Typical IPD vs. Timer1 Enabled (32 kHz, RC0/RC1 = 33 pF/33 pF, RC Mode) 103
Figure 12-11: Maximum IPD vs. Timer1 Enabled (32 kHz, RC0/RC1 = 33 pF/33 pF, 85°C to -40°C, RC Mode) 103
Figure 12-12: Typical IDD vs. Frequency (RC Mode @ 22 pF, 25°C) 104
Figure 12-13: Maximum IDD vs. Frequency (RC Mode @ 22 pF, -40°C to 85°C) 104
Figure 12-14: Typical IDD vs. Frequency (RC Mode @ 100 pF, 25°C) 105
Figure 12-15: Maximum IDD vs. Frequency (RC Mode @ 100 pF, -40°C to 85°C) 105
Figure 12-16: Typical IDD vs. Frequency (RC Mode @ 300 pF, 25°C) 106
Figure 12-17: Maximum IDD vs. Frequency (RC Mode @ 300 pF, -40°C to 85°C) 106
Figure 12-18: Typical IDD vs. Capacitance @ 500 kHz (RC Mode) 107
Figure 12-19: Transconductance(gm) of HS Oscillator vs. VDD 107
Figure 12-20: Transconductance(gm) of LP Oscillator vs. VDD 107
Figure 12-21: Transconductance(gm) of XT Oscillator vs. VDD 107
Figure 12-22: Typical XTAL Startup Time vs. VDD (LP Mode, 25°C) 108
Figure 12-23: Typical XTAL Startup Time vs. VDD (HS Mode, 25°C) 108
Figure 12-24: Typical XTAL Startup Time vs. VDD (XT Mode, 25°C) 108
Figure 12-25: Typical IDD vs. Frequency (LP Mode, 25°C) 109
Figure 12-26: Maximum IDD vs. Frequency (LP Mode, 85°C to -40°C) 109
Figure 12-27: Typical IDD vs. Frequency (XT Mode, 25°C) 109
Figure 12-28: Maximum IDD vs. Frequency (XT Mode, -40°C to 85°C) 109
Figure 12-29: Typical IDD vs. Frequency (HS Mode, 25°C) 110
Figure 12-30: Maximum IDD vs. Frequency (HS Mode, -40°C to 85°C) 110
Figure 13-1: Load Conditions 117
Figure 13-2: External Clock Timing 118
Figure 13-3: CLKOUT and I/O Timing 119
Figure 13-4: Reset, Watchdog Timer, Oscillator Start-Up Timer, and Power-Up Timer Timing 120
Figure 13-5: Brown-out Reset Timing 120
Figure 13-6: Timer0 Clock Timings 121
Figure 13-7: A/D Conversion Timing 124
Figure 14-1: Typical IPD vs. VDD (WDT Disabled, RC Mode) 125
Figure 14-2: Maximum IPD vs. VDD (WDT Disabled, RC Mode) 125
Figure 14-3: Typical IPD vs. VDD @ 25°C (WDT Enabled, RC Mode) 126
Figure 14-4: Maximum IPD vs. VDD (WDT Enabled, RC Mode) 126
Figure 14-5: Typical RC Oscillator Frequency vs. VDD 126

Figure 14-6: Typical RC Oscillator Frequency vs. VDD 126
Figure 14-7: Typical RC Oscillator Frequency vs. VDD 126
Figure 14-8: Typical IPD vs. VDD Brown-out Detect Enabled (RC Mode) 127
Figure 14-9: Maximum IPD vs. VDD Brown-out Detect Enabled (85°C to -40°C, RC Mode) 127
Figure 14-10: Typical IPD vs. Timer1 Enabled (32 kHz, RC0/RC1 = 33 pF/33 pF, RC Mode) 127
Figure 14-11: Maximum IPD vs. Timer1 Enabled (32 kHz, RC0/RC1 = 33 pF/33 pF, 85°C to -40°C, RC Mode) 127
Figure 14-12: Typical IDD vs. Frequency (RC Mode @ 22 pF, 25°C) 128
Figure 14-13: Maximum IDD vs. Frequency (RC Mode @ 22 pF, -40°C to 85°C) 128
Figure 14-14: Typical IDD vs. Frequency (RC Mode @ 100 pF, 25°C) 129
Figure 14-15: Maximum IDD vs. Frequency (RC Mode @ 100 pF, -40°C to 85°C) 129
Figure 14-16: Typical IDD vs. Frequency (RC Mode @ 300 pF, 25°C) 130
Figure 14-17: Maximum IDD vs. Frequency (RC Mode @ 300 pF, -40°C to 85°C) 130
Figure 14-18: Typical IDD vs. Capacitance @ 500 kHz (RC Mode) 131
Figure 14-19: Transconductance(gm) of HS Oscillator vs. VDD 131
Figure 14-20: Transconductance(gm) of LP Oscillator vs. VDD 131
Figure 14-21: Transconductance(gm) of XT Oscillator vs. VDD 131
Figure 14-22: Typical XTAL Startup Time vs. VDD (LP Mode, 25°C) 132
Figure 14-23: Typical XTAL Startup Time vs. VDD (HS Mode, 25°C) 132
Figure 14-24: Typical XTAL Startup Time vs. VDD (XT Mode, 25°C) 132
Figure 14-25: Typical IDD vs. Frequency (LP Mode, 25°C) 133
Figure 14-26: Maximum IDD vs. Frequency (LP Mode, 85°C to -40°C) 133
Figure 14-27: Typical IDD vs. Frequency (XT Mode, 25°C) 133
Figure 14-28: Maximum IDD vs. Frequency (XT Mode, -40°C to 85°C) 133
Figure 14-29: Typical IDD vs. Frequency (HS Mode, 25°C) 134
Figure 14-30: Maximum IDD vs. Frequency (HS Mode, -40°C to 85°C) 134
Figure 15-1: Load Conditions 140
Figure 15-2: External Clock Timing 141
Figure 15-3: CLKOUT and I/O Timing 142
Figure 15-4: Reset, Watchdog Timer, Oscillator Start-up Timer and Power-up Timer Timing 143
Figure 15-5: Timer0 External Clock Timings 144
Figure 15-6: A/D Conversion Timing 146
Figure 16-1: Typical RC Oscillator Frequency vs. Temperature 147
Figure 16-2: Typical RC Oscillator Frequency vs. VDD 147
Figure 16-3: Typical RC Oscillator Frequency vs. VDD 147
Figure 16-4: Typical RC Oscillator Frequency vs. VDD 148
Figure 16-5: Typical Ipd vs. VDD Watchdog Timer Disabled 25°C 148
Figure 16-6: Typical Ipd vs. VDD Watchdog Timer Enabled 25°C 148
Figure 16-7: Maximum Ipd vs. VDD Watchdog Disabled 149
Figure 16-8: Maximum Ipd vs. VDD Watchdog Enabled 149
Figure 16-9: Vth (Input Threshold Voltage) of I/O Pins vs. VDD 149
Figure 16-10: VIH, VIL of $\overline{\text{MCLR}}$, T0CKI and OSC1 (in RC Mode) vs. VDD 150
Figure 16-11: VTH (Input Threshold Voltage) of OSC1 Input (in XT, HS, and LP Modes) vs. VDD 150
Figure 16-12: Typical IDD vs. Freq (Ext Clock, 25°C) 151
Figure 16-13: Maximum, IDD vs. Freq (Ext Clock, -40° to +85°C) 151
Figure 16-14: Maximum IDD vs. Freq with A/D Off (Ext Clock, -55° to +125°C) 152
Figure 16-15: WDT Timer Time-out Period vs. VDD 152
Figure 16-16: Transconductance (gm) of HS Oscillator vs. VDD 152
Figure 16-17: Transconductance (gm) of LP Oscillator vs. VDD 153
Figure 16-18: Transconductance (gm) of XT Oscillator vs. VDD 153
Figure 16-19: IOH vs. VOH, VDD = 3V 153
Figure 16-20: IOH vs. VOH, VDD = 5V 153
Figure 16-21: IOL vs. VOL, VDD = 3V 154
Figure 16-22: IOL vs. VOL, VDD = 5V 154

© 1997 Microchip Technology Inc.

LIST OF TABLES

Table 1-1: PIC16C71X Family of Devices 4
Table 3-1: PIC16C710/71/711/715 Pinout Description 9
Table 4-1: PIC16C710/71/711 Special Function Register Summary 14
Table 4-2: PIC16C715 Special Function Register Summary 15
Table 5-1: PORTA Functions 26
Table 5-2: Summary of Registers Associated with PORTA 26
Table 5-3: PORTB Functions 28
Table 5-4: Summary of Registers Associated with PORTB 29
Table 6-1: Registers Associated with Timer0 35
Table 7-1: TAD vs. Device Operating Frequencies, PIC16C71 41
Table 7-2: TAD vs. Device Operating Frequencies, PIC16C710/711, PIC16C715 41
Table 7-3: Registers/Bits Associated with A/D, PIC16C710/71/711 46
Table 7-4: Registers/Bits Associated with A/D, PIC16C715 46
Table 8-1: Ceramic Resonators, PIC16C71 49
Table 8-2: Capacitor Selection For Crystal Oscillator, PIC16C71 49
Table 8-3: Ceramic Resonators, PIC16C710/711/715 50
Table 8-4: Capacitor Selection for Crystal Oscillator, PIC16C710/711/715 50
Table 8-5: Time-out in Various Situations, PIC16C71 54
Table 8-6: Time-out in Various Situations, PIC16C710/711/715 54
Table 8-7: Status Bits and Their Significance, PIC16C71 55
Table 8-8: Status Bits and Their Significance, PIC16C710/711 55
Table 8-9: Status Bits and Their Significance, PIC16C715 55
Table 8-10: Reset Condition for Special Registers, PIC16C710/71/711 56
Table 8-11: Reset Condition for Special Registers, PIC16C715 56
Table 8-12: Initialization Conditions For All Registers, PIC16C710/71/711 57
Table 8-13: Initialization Conditions for All Registers, PIC16C715 58
Table 9-1: Opcode Field Descriptions 69
Table 9-2: PIC16CXX Instruction Set 70
Table 10-1: Development Tools From Microchip 88
Table 11-1: Cross Reference of Device Specs for Oscillator Configurations and Frequencies of Operation (Commercial Devices) 89
Table 11-2: External Clock Timing Requirements 95
Table 11-3: CLKOUT and I/O Timing Requirements 96
Table 11-4: Reset, Watchdog Timer, Oscillator Start-up Timer, Power-up Timer, and Brown-out Reset Requirements 97
Table 11-5: Timer0 External Clock Requirements 98
Table 11-6: A/D Converter Characteristics: PIC16C710/711-04 (Commercial, Industrial, Extended) PIC16C710/711-10 (Commercial, Industrial, Extended) PIC16C710/711-20 (Commercial, Industrial, Extended) PIC16LC710/711-04 (Commercial, Industrial, Extended) 99
Table 11-7: A/D Conversion Requirements 100
Table 12-1: RC Oscillator Frequencies 107
Table 12-2: Capacitor Selection for Crystal Oscillators 108
Table 13-1: Cross Reference of Device Specs for Oscillator Configurations and Frequencies of Operation (Commercial Devices) 112
Table 13-2: Clock Timing Requirements 118
Table 13-3: CLKOUT and I/O Timing Requirements 119
Table 13-4: Reset, Watchdog Timer, Oscillator Start-up Timer, Power-up Timer, and Brown-out Reset Requirements 120
Table 13-5: Timer0 Clock Requirements 121
Table 13-6: A/D Converter Characteristics: PIC16C715-04 (Commercial, Industrial, Extended) PIC16C715-10 (Commercial, Industrial, Extended) PIC16C715-20 (Commercial, Industrial, Extended) 122
Table 13-7: A/D Converter Characteristics: PIC16LC715-04 (Commercial, Industrial) 123
Table 13-8: A/D Conversion Requirements 124
Table 14-1: RC Oscillator Frequencies 131
Table 14-2: Capacitor Selection for Crystal Oscillators 132
Table 15-1: Cross Reference of Device Specs for Oscillator Configurations and Frequencies of Operation (Commercial Devices) 135
Table 15-2: External Clock Timing Requirements 141
Table 15-3: CLKOUT and I/O Timing Requirements 142
Table 15-4: Reset, Watchdog Timer, Oscillator Start-up Timer and Power-up Timer Requirements 143
Table 15-5: Timer0 External Clock Requirements 144
Table 15-6: A/D Converter Characteristics 145
Table 15-7: A/D Conversion Requirements 146
Table 16-1: RC Oscillator Frequencies 148

NOTES:

© 1997 Microchip Technology Inc.

ON-LINE SUPPORT

Microchip provides two methods of on-line support. These are the Microchip BBS and the Microchip World Wide Web (WWW) site.

Use Microchip's Bulletin Board Service (BBS) to get current information and help about Microchip products. Microchip provides the BBS communication channel for you to use in extending your technical staff with microcontroller and memory experts.

To provide you with the most responsive service possible, the Microchip systems team monitors the BBS, posts the latest component data and software tool updates, provides technical help and embedded systems insights, and discusses how Microchip products provide project solutions.

The web site, like the BBS, is used by Microchip as a means to make files and information easily available to customers. To view the site, the user must have access to the Internet and a web browser, such as Netscape or Microsoft Explorer. Files are also available for FTP download from our FTP site.

Connecting to the Microchip Internet Web Site

The Microchip web site is available by using your favorite Internet browser to attach to:

www.microchip.com

The file transfer site is available by using an FTP service to connect to:

ftp://ftp.futureone.com/pub/microchip

The web site and file transfer site provide a variety of services. Users may download files for the latest Development Tools, Data Sheets, Application Notes, User's Guides, Articles and Sample Programs. A variety of Microchip specific business information is also available, including listings of Microchip sales offices, distributors and factory representatives. Other data available for consideration is:

- Latest Microchip Press Releases
- Technical Support Section with Frequently Asked Questions
- Design Tips
- Device Errata
- Job Postings
- Microchip Consultant Program Member Listing
- Links to other useful web sites related to Microchip Products

Connecting to the Microchip BBS

Connect worldwide to the Microchip BBS using either the Internet or the CompuServe® communications network.

Internet:

You can telnet or ftp to the Microchip BBS at the address: **mchipbbs.microchip.com**

CompuServe Communications Network:

When using the BBS via the Compuserve Network, in most cases, a local call is your only expense. The Microchip BBS connection does not use CompuServe membership services, therefore you do not need CompuServe membership to join Microchip's BBS. There is no charge for connecting to the Microchip BBS. The procedure to connect will vary slightly from country to country. Please check with your local CompuServe agent for details if you have a problem. CompuServe service allow multiple users various baud rates depending on the local point of access.

The following connect procedure applies in most locations.

1. Set your modem to 8-bit, No parity, and One stop (8N1). This is not the normal CompuServe setting which is 7E1.
2. Dial your local CompuServe access number.
3. Depress the **<Enter>** key and a garbage string will appear because CompuServe is expecting a 7E1 setting.
4. Type +, depress the **<Enter>** key and "`Host Name:`" will appear.
5. Type MCHIPBBS, depress the **<Enter>** key and you will be connected to the Microchip BBS.

In the United States, to find the CompuServe phone number closest to you, set your modem to 7E1 and dial (800) 848-4480 for 300-2400 baud or (800) 331-7166 for 9600-14400 baud connection. After the system responds with "`Host Name:`", type `NETWORK`, depress the **<Enter>** key and follow CompuServe's directions.

For voice information (or calling from overseas), you may call (614) 723-1550 for your local CompuServe number.

Microchip regularly uses the Microchip BBS to distribute technical information, application notes, source code, errata sheets, bug reports, and interim patches for Microchip systems software products. For each SIG, a moderator monitors, scans, and approves or disapproves files submitted to the SIG. No executable files are accepted from the user community in general to limit the spread of computer viruses.

Systems Information and Upgrade Hot Line

The Systems Information and Upgrade Line provides system users a listing of the latest versions of all of Microchip's development systems software products. Plus, this line provides information on how customers can receive any currently available upgrade kits.The Hot Line Numbers are:

1-800-755-2345 for U.S. and most of Canada, and

1-602-786-7302 for the rest of the world.

970301

Trademarks: The Microchip name, logo, PIC, PICSTART, PICMASTER and PRO MATE are registered trademarks of Microchip Technology Incorporated in the U.S.A. and other countries. *Flex*ROM, MPLAB and *fuzzy*LAB, are trademarks and SQTP is a service mark of Microchip in the U.S.A.

*fuzzy*TECH is a registered trademark of Inform Software Corporation. IBM, IBM PC-AT are registered trademarks of International Business Machines Corp. Pentium is a trademark of Intel Corporation. Windows is a trademark and MS-DOS, Microsoft Windows are registered trademarks of Microsoft Corporation. CompuServe is a registered trademark of CompuServe Incorporated.

All other trademarks mentioned herein are the property of their respective companies.

READER RESPONSE

It is our intention to provide you with the best documentation possible to ensure successful use of your Microchip product. If you wish to provide your comments on organization, clarity, subject matter, and ways in which our documentation can better serve you, please FAX your comments to the Technical Publications Manager at (602) 786-7578.

Please list the following information, and use this outline to provide us with your comments about this Data Sheet.

To: Technical Publications Manager Total Pages Sent

RE: Reader Response

From: Name _____

Company _____

Address _____

City / State / ZIP / Country _____

Telephone: (_____) _____ - _____ FAX: (_____) _____ - _____

Application (optional):

Would you like a reply?___Y ___N

Device: **PIC16C71X** Literature Number: **DS30272A**

Questions:

1. What are the best features of this document?

_____

_____

2. How does this document meet your hardware and software development needs?

_____

_____

3. Do you find the organization of this data sheet easy to follow? If not, why?

_____

_____

4. What additions to the data sheet do you think would enhance the structure and subject?

_____

_____

5. What deletions from the data sheet could be made without affecting the overall usefulness?

_____

_____

6. Is there any incorrect or misleading information (what and where)?

_____

_____

7. How would you improve this document?

_____

_____

8. How would you improve our software, systems, and silicon products?

_____

_____

© 1997 Microchip Technology Inc.

PIC16C71X PRODUCT IDENTIFICATION SYSTEM

To order or obtain information, e.g., on pricing or delivery refer to the factory or the listed sales office.

PART NO. -XX X /XX XXX

Pattern:	QTP, SQTP, Code or Special Requirements		
Package:	JW	=	Windowed CERDIP
	SO	=	SOIC
	SP	=	Skinny plastic dip
	P	=	PDIP
	SS	=	SSOP
Temperature Range:	-	=	0°C to +70°C
	I	=	-40°C to +85°C
	E	=	-40°C to +125°C
Frequency Range:	04	=	200 kHz (PIC16C7X-04)
	04	=	4 MHz
	10	=	10 MHz
	20	=	20 MHz
Device	PIC16C7X		:VDD range 4.0V to 6.0V
	PIC16C7XT		:VDD range 4.0V to 6.0V (Tape/Reel)
	PIC16LC7X		:VDD range 2.5V to 6.0V
	PIC16LC7XT		:VDD range 2.5V to 6.0V (Tape/Reel)

Examples

a) PIC16C71 - 04/P 301 Commercial Temp., PDIP Package, 4 MHz, normal VDD limits, QTP pattern #301

* JW Devices are UV erasable and can be programmed to any device configuration. JW Devices meet the electrical requirement of each oscillator type (including LC devices).

Sales and Support

Products supported by a preliminary Data Sheet may possibly have an errata sheet describing minor operational differences and recommended workarounds. To determine if an errata sheet exists for a particular device, please contact one of the following:

1. Your local Microchip sales office (see below)
2. The Microchip Corporate Literature Center U.S. FAX: (602) 786-7277
3. The Microchip's Bulletin Board, via your local CompuServe number (CompuServe membership NOT required).

Please specify which device, revision of silicon and Data Sheet (include Literature #) you are using.
For latest version information and upgrade kits for Microchip Development Tools, please call 1-800-755-2345 or 1-602-786-7302.

© 1997 Microchip Technology Inc.

NOTES:

© 1997 Microchip Technology Inc.

NOTES:

Note the following details of the code protection feature on PICmicro® MCUs.

- The PICmicro family meets the specifications contained in the Microchip Data Sheet.
- Microchip believes that its family of PICmicro microcontrollers is one of the most secure products of its kind on the market today, when used in the intended manner and under normal conditions.
- There are dishonest and possibly illegal methods used to breach the code protection feature. All of these methods, to our knowledge, require using the PICmicro microcontroller in a manner outside the operating specifications contained in the data sheet. The person doing so may be engaged in theft of intellectual property.
- Microchip is willing to work with the customer who is concerned about the integrity of their code.
- Neither Microchip nor any other semiconductor manufacturer can guarantee the security of their code. Code protection does not mean that we are guaranteeing the product as “unbreakable”.
- Code protection is constantly evolving. We at Microchip are committed to continuously improving the code protection features of our product.

If you have any further questions about this matter, please contact the local sales office nearest to you.

Information contained in this publication regarding device applications and the like is intended through suggestion only and may be superseded by updates. It is your responsibility to ensure that your application meets with your specifications. No representation or warranty is given and no liability is assumed by Microchip Technology Incorporated with respect to the accuracy or use of such information, or infringement of patents or other intellectual property rights arising from such use or otherwise. Use of Microchip’s products as critical components in life support systems is not authorized except with express written approval by Microchip. No licenses are conveyed, implicitly or otherwise, under any intellectual property rights.

Trademarks

The Microchip name and logo, the Microchip logo, FilterLab, KEELOQ, microID, MPLAB, PIC, PICmicro, PICMASTER, PICSTART, PRO MATE, SEEVAL and The Embedded Control Solutions Company are registered trademarks of Microchip Technology Incorporated in the U.S.A. and other countries.

dsPIC, ECONOMONITOR, FanSense, FlexROM, fuzzyLAB, In-Circuit Serial Programming, ICSP, ICEPIC, microPort, Migratable Memory, MPASM, MPLIB, MPLINK, MPSIM, MXDEV, PICC, PICDEM, PICDEM.net, rfPIC, Select Mode and Total Endurance are trademarks of Microchip Technology Incorporated in the U.S.A.

Serialized Quick Turn Programming (SQTP) is a service mark of Microchip Technology Incorporated in the U.S.A.

All other trademarks mentioned herein are property of their respective companies.

© 2002, Microchip Technology Incorporated, Printed in the U.S.A., All Rights Reserved.

Printed on recycled paper.

DNV Certification, Inc. USA
ANSI • RAB QMS ACCREDITED
DNV MSC The Netherlands Accredited by the RvA
DNV
ISO 9001 / QS-9000 REGISTERED FIRM

Microchip received QS-9000 quality system certification for its worldwide headquarters, design and wafer fabrication facilities in Chandler and Tempe, Arizona in July 1999. The Company’s quality system processes and procedures are QS-9000 compliant for its PICmicro® 8-bit MCUs, KEELOQ® code hopping devices, Serial EEPROMs and microperipheral products. In addition, Microchip’s quality system for the design and manufacture of development systems is ISO 9001 certified.

WORLDWIDE SALES AND SERVICE

AMERICAS

Corporate Office
2355 West Chandler Blvd.
Chandler, AZ 85224-6199
Tel: 480-792-7200 Fax: 480-792-7277
Technical Support: 480-792-7627
Web Address: http://www.microchip.com

Rocky Mountain
2355 West Chandler Blvd.
Chandler, AZ 85224-6199
Tel: 480-792-7966 Fax: 480-792-7456

Atlanta
500 Sugar Mill Road, Suite 200B
Atlanta, GA 30350
Tel: 770-640-0034 Fax: 770-640-0307

Boston
2 Lan Drive, Suite 120
Westford, MA 01886
Tel: 978-692-3848 Fax: 978-692-3821

Chicago
333 Pierce Road, Suite 180
Itasca, IL 60143
Tel: 630-285-0071 Fax: 630-285-0075

Dallas
4570 Westgrove Drive, Suite 160
Addison, TX 75001
Tel: 972-818-7423 Fax: 972-818-2924

Detroit
Tri-Atria Office Building
32255 Northwestern Highway, Suite 190
Farmington Hills, MI 48334
Tel: 248-538-2250 Fax: 248-538-2260

Kokomo
2767 S. Albright Road
Kokomo, Indiana 46902
Tel: 765-864-8360 Fax: 765-864-8387

Los Angeles
18201 Von Karman, Suite 1090
Irvine, CA 92612
Tel: 949-263-1888 Fax: 949-263-1338

New York
150 Motor Parkway, Suite 202
Hauppauge, NY 11788
Tel: 631-273-5305 Fax: 631-273-5335

San Jose
Microchip Technology Inc.
2107 North First Street, Suite 590
San Jose, CA 95131
Tel: 408-436-7950 Fax: 408-436-7955

Toronto
6285 Northam Drive, Suite 108
Mississauga, Ontario L4V 1X5, Canada
Tel: 905-673-0699 Fax: 905-673-6509

ASIA/PACIFIC

Australia
Microchip Technology Australia Pty Ltd
Suite 22, 41 Rawson Street
Epping 2121, NSW
Australia
Tel: 61-2-9868-6733 Fax: 61-2-9868-6755

China - Beijing
Microchip Technology Consulting (Shanghai) Co., Ltd., Beijing Liaison Office
Unit 915
Bei Hai Wan Tai Bldg.
No. 6 Chaoyangmen Beidajie
Beijing, 100027, No. China
Tel: 86-10-85282100 Fax: 86-10-85282104

China - Chengdu
Microchip Technology Consulting (Shanghai) Co., Ltd., Chengdu Liaison Office
Rm. 2401, 24th Floor,
Ming Xing Financial Tower
No. 88 TIDU Street
Chengdu 610016, China
Tel: 86-28-6766200 Fax: 86-28-6766599

China - Fuzhou
Microchip Technology Consulting (Shanghai) Co., Ltd., Fuzhou Liaison Office
Unit 28F, World Trade Plaza
No. 71 Wusi Road
Fuzhou 350001, China
Tel: 86-591-7503506 Fax: 86-591-7503521

China - Shanghai
Microchip Technology Consulting (Shanghai) Co., Ltd.
Room 701, Bldg. B
Far East International Plaza
No. 317 Xian Xia Road
Shanghai, 200051
Tel: 86-21-6275-5700 Fax: 86-21-6275-5060

China - Shenzhen
Microchip Technology Consulting (Shanghai) Co., Ltd., Shenzhen Liaison Office
Rm. 1315, 13/F, Shenzhen Kerry Centre,
Renminnan Lu
Shenzhen 518001, China
Tel: 86-755-2350361 Fax: 86-755-2366086

Hong Kong
Microchip Technology Hongkong Ltd.
Unit 901-6, Tower 2, Metroplaza
223 Hing Fong Road
Kwai Fong, N.T., Hong Kong
Tel: 852-2401-1200 Fax: 852-2401-3431

India
Microchip Technology Inc.
India Liaison Office
Divyasree Chambers
1 Floor, Wing A (A3/A4)
No. 11, O'Shaugnessey Road
Bangalore, 560 025, India
Tel: 91-80-2290061 Fax: 91-80-2290062

Japan
Microchip Technology Japan K.K.
Benex S-1 6F
3-18-20, Shinyokohama
Kohoku-Ku, Yokohama-shi
Kanagawa, 222-0033, Japan
Tel: 81-45-471- 6166 Fax: 81-45-471-6122

Korea
Microchip Technology Korea
168-1, Youngbo Bldg. 3 Floor
Samsung-Dong, Kangnam-Ku
Seoul, Korea 135-882
Tel: 82-2-554-7200 Fax: 82-2-558-5934

Singapore
Microchip Technology Singapore Pte Ltd.
200 Middle Road
#07-02 Prime Centre
Singapore, 188980
Tel: 65-334-8870 Fax: 65-334-8850

Taiwan
Microchip Technology Taiwan
11F-3, No. 207
Tung Hua North Road
Taipei, 105, Taiwan
Tel: 886-2-2717-7175 Fax: 886-2-2545-0139

EUROPE

Denmark
Microchip Technology Nordic ApS
Regus Business Centre
Lautrup hoj 1-3
Ballerup DK-2750 Denmark
Tel: 45 4420 9895 Fax: 45 4420 9910

France
Microchip Technology SARL
Parc d'Activite du Moulin de Massy
43 Rue du Saule Trapu
Batiment A - ler Etage
91300 Massy, France
Tel: 33-1-69-53-63-20 Fax: 33-1-69-30-90-79

Germany
Microchip Technology GmbH
Gustav-Heinemann Ring 125
D-81739 Munich, Germany
Tel: 49-89-627-144 0 Fax: 49-89-627-144-44

Italy
Microchip Technology SRL
Centro Direzionale Colleoni
Palazzo Taurus 1 V. Le Colleoni 1
20041 Agrate Brianza
Milan, Italy
Tel: 39-039-65791-1 Fax: 39-039-6899883

United Kingdom
Arizona Microchip Technology Ltd.
505 Eskdale Road
Winnersh Triangle
Wokingham
Berkshire, England RG41 5TU
Tel: 44 118 921 5869 Fax: 44-118 921-5820

01/18/02

© 2002 Microchip Technology Inc.