PIC16C505

14-Pin, 8-Bit CMOS Microcontroller

Device included in this Data Sheet:

PIC16C505

High-Performance RISC CPU:

- Only 33 instructions to learn
- Operating speed:
  - DC - 20 MHz clock input
  - DC - 200 ns instruction cycle

Device	Memory	
	Program	Data
PIC16C505	1024 x 12	72 x 8

- Direct, indirect and relative addressing modes for data and instructions
- 12-bit wide instructions
- 8-bit wide data path
- 2-level deep hardware stack
- Eight special function hardware registers
- Direct, indirect and relative addressing modes for data and instructions
- All single cycle instructions (200 ns) except for program branches which are two-cycle

Peripheral Features:

- 11 I/O pins with individual direction control
- 1 input pin
- High current sink/source for direct LED drive
- Timer0: 8-bit timer/counter with 8-bit programmable prescaler

Pin Diagram:

PDIP, SOIC, Ceramic Side Brazed

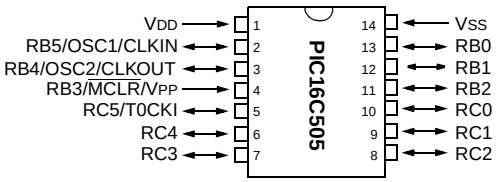

Special Microcontroller Features:

- In-Circuit Serial Programming (ICSP™)
- Power-on Reset (POR)
- Device Reset Timer (DRT)
- Watchdog Timer (WDT) with dedicated on-chip RC oscillator for reliable operation
- Programmable Code Protection
- Internal weak pull-ups on I/O pins
- Wake-up from Sleep on pin change
- Power-saving Sleep mode
- Selectable oscillator options:
  - INTRC: Precision internal 4 MHz oscillator
  - EXTRC: External low-cost RC oscillator
  - XT: Standard crystal/resonator
  - HS: High speed crystal/resonator
  - LP: Power saving, low frequency crystal

CMOS Technology:

- Low-power, high-speed CMOS EPROM technology
- Fully static design
- Wide operating voltage range (2.5V to 5.5V)
- Wide temperature ranges
  - Commercial: 0°C to +70°C
  - Industrial: -40°C to +85°C
  - Extended: -40°C to +125°C
  - < 1.0 µA typical standby current @ 5V
- Low power consumption
  - < 2.0 mA @ 5V, 4 MHz
  - 15 µA typical @ 3.0V, 32 kHz for TMR0 running in SLEEP mode
  - < 1.0 µA typical standby current @ 5V

© 1999 Microchip Technology Inc.

TABLE OF CONTENTS

1.0 General Description 3
2.0 PIC16C505 Device Varieties 5
3.0 Architectural Overview 7
4.0 Memory Organization 11
5.0 I/O Port 19
6.0 Timer0 Module and TMR0 Register 23
7.0 Special Features of the CPU 27
8.0 Instruction Set Summary 39
9.0 Development Support 51
10.0 Electrical Characteristics - PIC16C505 57
11.0 DC and AC Characteristics - PIC16C505 71
11.0 Packaging Information 75
Index 79
On-Line Support 81
Reader Response 82
PIC16C505 Product Identification System 83

To Our Valued Customers

Most Current Data Sheet

To obtain the most up-to-date version of this data sheet, please register at our Worldwide Web site at:

http://www.microchip.com

You can determine the version of a data sheet by examining its literature number found on the bottom outside corner of any page. The last character of the literature number is the version number. e.g., DS30000A is version A of document DS30000.

New Customer Notification System

Register on our web site (www.microchip.com/cn) to receive the most current information on our products.

Errata

An errata sheet may exist for current devices, describing minor operational differences (from the data sheet) and recommended workarounds. As device/documentation issues become known to us, we will publish an errata sheet. The errata will specify the revision of silicon and revision of document to which it applies.

To determine if an errata sheet exists for a particular device, please check with one of the following:

- Microchip's Worldwide Web site; http://www.microchip.com
- Your local Microchip sales office (see last page)
- The Microchip Corporate Literature Center; U.S. FAX: (480) 786-7277

When contacting a sales office or the literature center, please specify which device, revision of silicon and data sheet (include literature number) you are using.

Corrections to this Data Sheet

We constantly strive to improve the quality of all our products and documentation. We have spent a great deal of time to ensure that this document is correct. However, we realize that we may have missed a few things. If you find any information that is missing or appears in error, please:

- Fill out and mail in the reader response form in the back of this data sheet.
- E-mail us at webmaster@microchip.com.

We appreciate your assistance in making this a better document.

© 1999 Microchip Technology Inc.

1.0 GENERAL DESCRIPTION

The PIC16C505 from Microchip Technology is a low-cost, high-performance, 8-bit, fully static, EPROM/ROM-based CMOS microcontroller. It employs a RISC architecture with only 33 single word/single cycle instructions. All instructions are single cycle (200 µs) except for program branches, which take two cycles. The PIC16C505 delivers performance an order of magnitude higher than its competitors in the same price category. The 12-bit wide instructions are highly symmetrical resulting in a typical 2:1 code compression over other 8-bit microcontrollers in its class. The easy to use and easy to remember instruction set reduces development time significantly.

The PIC16C505 product is equipped with special features that reduce system cost and power requirements. The Power-On Reset (POR) and Device Reset Timer (DRT) eliminate the need for external reset circuitry. There are five oscillator configurations to choose from, including INTRC internal oscillator mode and the power-saving LP (Low Power) oscillator mode. Power saving SLEEP mode, Watchdog Timer and code protection features improve system cost, power and reliability.

The PIC16C505 is available in the cost-effective One-Time-Programmable (OTP) version, which is suitable for production in any volume. The customer can take full advantage of Microchip's price leadership in OTP microcontrollers, while benefiting from the OTP's flexibility.

The PIC16C505 product is supported by a full-featured macro assembler, a software simulator, an in-circuit emulator, a 'C' compiler, a low-cost development programmer and a full featured programmer. All the tools are supported on IBM® PC and compatible machines.

1.1 Applications

The PIC16C505 fits in applications ranging from personal care appliances and security systems to low-power remote transmitters/receivers. The EPROM technology makes customizing application programs (transmitter codes, appliance settings, receiver frequencies, etc.) extremely fast and convenient. The small footprint packages, for through hole or surface mounting, make this microcontroller perfect for applications with space limitations. Low-cost, low-power, high-performance, ease of use and I/O flexibility make the PIC16C505 very versatile even in areas where no microcontroller use has been considered before (e.g., timer functions, replacement of "glue" logic and PLD's in larger systems, and coprocessor applications).

© 1999 Microchip Technology Inc.

TABLE 1-1: PIC16C505 DEVICE

		PIC16C505
Clock	Maximum Frequency of Operation (MHz)	20
Memory	EPROM Program Memory	1024
	Data Memory (bytes)	72
Peripherals	Timer Module(s)	TMR0
	Wake-up from SLEEP on pin change	Yes
Features	I/O Pins	11
	Input Pins	1
	Internal Pull-ups	Yes
	In-Circuit Serial Programming	Yes
	Number of Instructions	33
	Packages	14-pin DIP, SOIC, JW

The PIC16C505 device has Power-on Reset, selectable Watchdog Timer, selectable code protect, high I/O current capability and precision internal oscillator.
The PIC16C505 device uses serial programming with data pin RB0 and clock pin RB1.

© 1999 Microchip Technology Inc.

2.0 PIC16C505 DEVICE VARIETIES

A variety of packaging options are available. Depending on application and production requirements, the proper device option can be selected using the information in this section. When placing orders, please use the PIC16C505 Product Identification System at the back of this data sheet to specify the correct part number.

2.1 UV Erasable Devices

The UV erasable version, offered in a ceramic windowed package, is optimal for prototype development and pilot programs.

The UV erasable version can be erased and reprogrammed to any of the configuration modes.

Note:	Please note that erasing the device will also erase the pre-programmed internal calibration value for the internal oscillator. The calibration value must be saved prior to erasing the part.

Microchip's PICSTART® PLUS and PRO MATE® II programmers all support programming of the PIC16C505. Third party programmers also are available; refer to the *Microchip Third Party Guide,* (DS00104), for a list of sources.

2.2 One-Time-Programmable (OTP) Devices

The availability of OTP devices is especially useful for customers who need the flexibility of frequent code updates or small volume applications.

The OTP devices, packaged in plastic packages, permit the user to program them once. In addition to the program memory, the configuration bits must also be programmed.

2.3 Quick-Turnaround-Production (QTP) Devices

Microchip offers a QTP Programming Service for factory production orders. This service is made available for users who choose not to program medium to high quantity units and whose code patterns have stabilized. The devices are identical to the OTP devices but with all EPROM locations and fuse options already programmed by the factory. Certain code and prototype verification procedures do apply before production shipments are available. Please contact your local Microchip Technology sales office for more details.

2.4 Serialized Quick-Turnaround Production (SQTP℠) Devices

Microchip offers a unique programming service, where a few user-defined locations in each device are programmed with different serial numbers. The serial numbers may be random, pseudo-random or sequential.

Serial programming allows each device to have a unique number, which can serve as an entry-code, password or ID number.

NOTES:

© 1999 Microchip Technology Inc.

3.0 ARCHITECTURAL OVERVIEW

The high performance of the PIC16C505 can be attributed to a number of architectural features commonly found in RISC microprocessors. To begin with, the PIC16C505 uses a Harvard architecture in which program and data are accessed on separate buses. This improves bandwidth over traditional von Neumann architecture where program and data are fetched on the same bus. Separating program and data memory further allows instructions to be sized differently than the 8-bit wide data word. Instruction opcodes are 12 bits wide, making it possible to have all single word instructions. A 12-bit wide program memory access bus fetches a 12-bit instruction in a single cycle. A two-stage pipeline overlaps fetch and execution of instructions. Consequently, all instructions (33) execute in a single cycle (200ns @ 20MHz) except for program branches.

The Table below lists program memory (EPROM) and data memory (RAM) for the PIC16C505.

Device	Memory	
	Program	Data
PIC16C505	1024 x 12	72 x 8

The PIC16C505 can directly or indirectly address its register files and data memory. All special function registers, including the program counter, are mapped in the data memory. The PIC16C505 has a highly orthogonal (symmetrical) instruction set that makes it possible to carry out any operation on any register using any addressing mode. This symmetrical nature and lack of ‘special optimal situations’ make programming with the PIC16C505 simple yet efficient. In addition, the learning curve is reduced significantly.

The PIC16C505 device contains an 8-bit ALU and working register. The ALU is a general purpose arithmetic unit. It performs arithmetic and Boolean functions between data in the working register and any register file.

The ALU is 8-bits wide and capable of addition, subtraction, shift and logical operations. Unless otherwise mentioned, arithmetic operations are two's complement in nature. In two-operand instructions, one operand is typically the W (working) register. The other operand is either a file register or an immediate constant. In single operand instructions, the operand is either the W register or a file register.

The W register is an 8-bit working register used for ALU operations. It is not an addressable register.

Depending on the instruction executed, the ALU may affect the values of the Carry (C), Digit Carry (DC), and Zero (Z) bits in the STATUS register. The C and DC bits operate as a $\overline{\text{borrow}}$ and $\overline{\text{digit borrow}}$ out bit, respectively, in subtraction. See the `SUBWF` and `ADDWF` instructions for examples.

A simplified block diagram is shown in Figure 3-1, with the corresponding device pins described in Table 3-1.

FIGURE 3-1: PIC16C505 BLOCK DIAGRAM

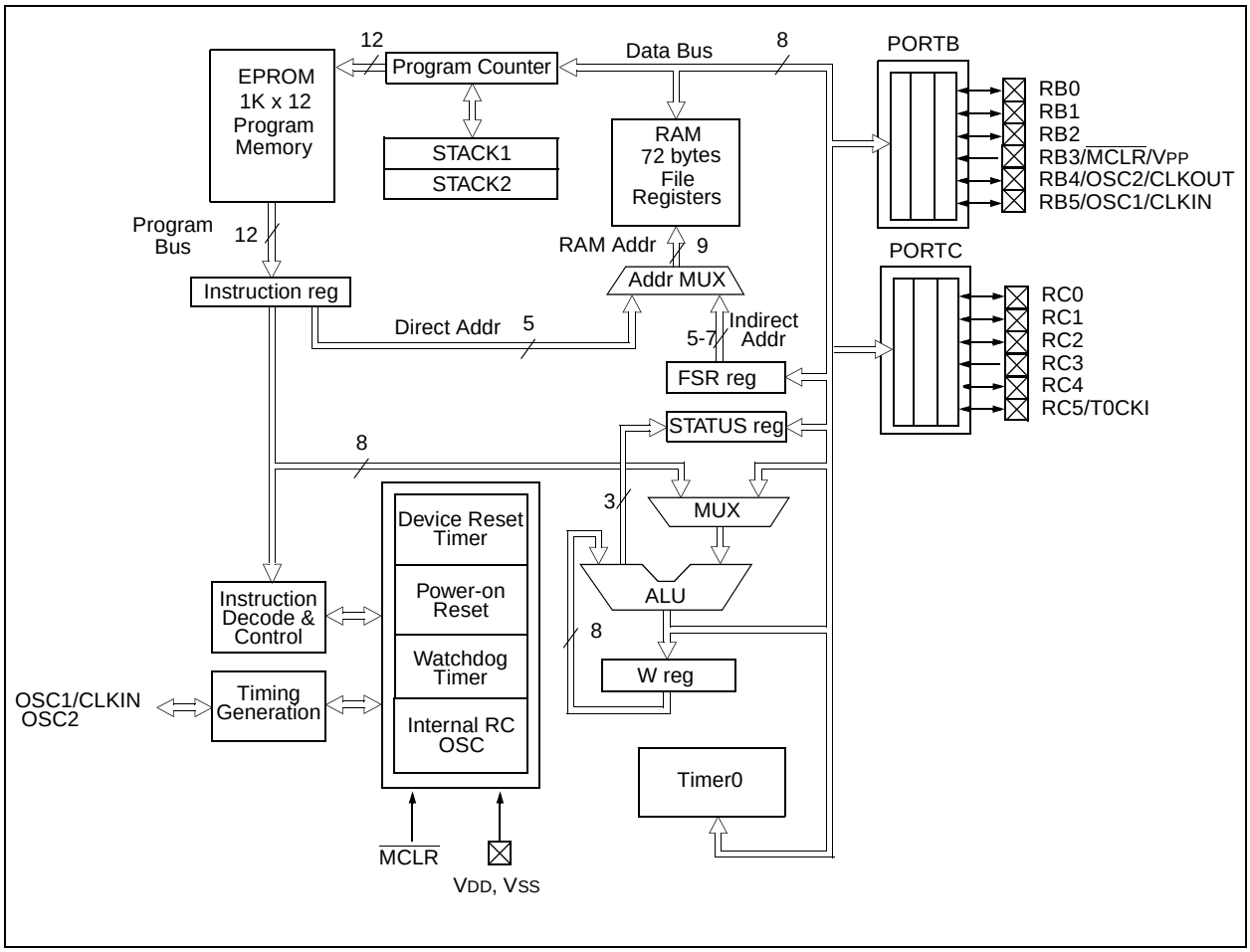

© 1999 Microchip Technology Inc.

TABLE 3-1: PIC16C505 PINOUT DESCRIPTION

Name	DIP Pin #	SOIC Pin #	I/O/P Type	Buffer Type	Description
RB0	13	13	I/O	TTL/ST	Bi-directional I/O port/ serial programming data. Can be software programmed for internal weak pull-up and wake-up from SLEEP on pin change. This buffer is a Schmitt Trigger input when used in serial programming mode.
RB1	12	12	I/O	TTL/ST	Bi-directional I/O port/ serial programming clock. Can be software programmed for internal weak pull-up and wake-up from SLEEP on pin change. This buffer is a Schmitt Trigger input when used in serial programming mode.
RB2	11	11	I/O	TTL	Bi-directional I/O port.
RB3/$\overline{\text{MCLR}}$/V_{PP}	4	4	I	TTL/ST	Input port/master clear (reset) input/programming voltage input. When configured as $\overline{\text{MCLR}}$, this pin is an active low reset to the device. Voltage on $\overline{\text{MCLR}}$/V_{PP} must not exceed V_{DD} during normal device operation. Can be software programmed for internal weak pull-up and wake-up from SLEEP on pin change. Weak pull-up only when configured as RB3. ST when configured as $\overline{\text{MCLR}}$.
RB4/OSC2/CLKOUT	3	3	I/O	TTL	Bi-directional I/O port/oscillator crystal output. Connections to crystal or resonator in crystal oscillator mode (XT and LP modes only, RB4 in other modes). Can be software programmed for internal weak pull-up and wake-up from SLEEP on pin change. In EXTRC and INTRC modes, the pin output can be configured to CLKOUT, which has 1/4 the frequency of OSC1 and denotes the instruction cycle rate.
RB5/OSC1/CLKIN	2	2	I/O	TTL/ST	Bidirectional IO port/oscillator crystal input/external clock source input (RB5 in Internal RC mode only, OSC1 in all other oscillator modes). TTL input when RB5, ST input in external RC oscillator mode.
RC0	10	10	I/O	TTL	Bi-directional I/O port.
RC1	9	9	I/O	TTL	Bi-directional I/O port.
RC2	8	8	I/O	TTL	Bi-directional I/O port.
RC3	7	7	I/O	TTL	Bi-directional I/O port.
RC4	6	6	I/O	TTL	Bi-directional I/O port.
RC5/T0CKI	5	5	I/O	ST	Bi-directional I/O port. Can be configured as T0CKI.
V_{DD}	1	1	P	—	Positive supply for logic and I/O pins
V_{SS}	14	14	P	—	Ground reference for logic and I/O pins

Legend: I = input, O = output, I/O = input/output, P = power, — = not used, TTL = TTL input, ST = Schmitt Trigger input

3.1 Clocking Scheme/Instruction Cycle

The clock input (OSC1/CLKIN pin) is internally divided by four to generate four non-overlapping quadrature clocks namely Q1, Q2, Q3 and Q4. Internally, the program counter is incremented every Q1, and the instruction is fetched from program memory and latched into the instruction register in Q4. It is decoded and executed during the following Q1 through Q4. The clocks and instruction execution flow is shown in Figure 3-2 and Example 3-1.

3.2 Instruction Flow/Pipelining

An Instruction cycle consists of four Q cycles (Q1, Q2, Q3 and Q4). The instruction fetch and execute are pipelined such that fetch takes one instruction cycle, while decode and execute takes another instruction cycle. However, due to the pipelining, each instruction effectively executes in one cycle. If an instruction causes the program counter to change (e.g., `GOTO`) then two cycles are required to complete the instruction (Example 3-1).

A fetch cycle begins with the program counter (PC) incrementing in Q1.

In the execution cycle, the fetched instruction is latched into the Instruction Register (IR) in cycle Q1. This instruction is then decoded and executed during the Q2, Q3 and Q4 cycles. Data memory is read during Q2 (operand read) and written during Q4 (destination write).

FIGURE 3-2: CLOCK/INSTRUCTION CYCLE

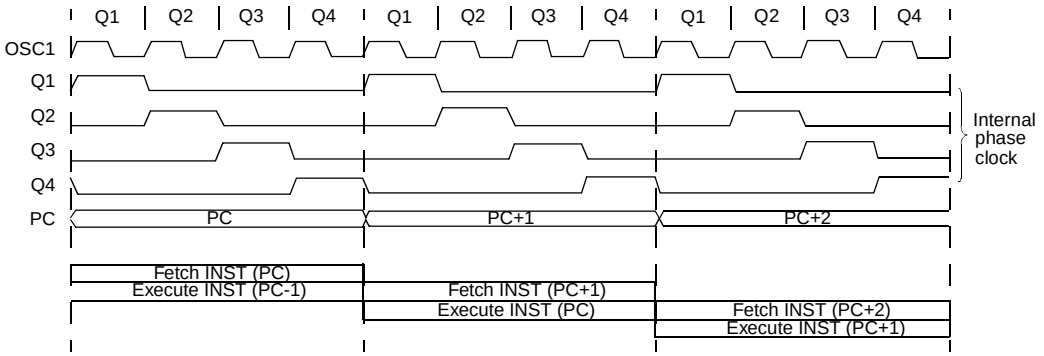

EXAMPLE 3-1: INSTRUCTION PIPELINE FLOW

```
1. MOVLW 03H
2. MOVWF PORTB
3. CALL  SUB_1
4. BSF   PORTB, BIT1
```

Fetch 1	Execute 1				
	Fetch 2	Execute 2			
		Fetch 3	Execute 3		
			Fetch 4	Flush	
				Fetch SUB_1	Execute SUB_1

All instructions are single cycle, except for any program branches. These take two cycles, since the fetch instruction is “flushed” from the pipeline, while the new instruction is being fetched and then executed.

© 1999 Microchip Technology Inc.

4.0 MEMORY ORGANIZATION

PIC16C505 memory is organized into program memory and data memory. For the PIC16C505, a paging scheme is used. Program memory pages are accessed using one STATUS register bit. Data memory banks are accessed using the File Select Register (FSR).

4.1 Program Memory Organization

The PIC16C505 devices have a 12-bit Program Counter (PC).

The 1K x 12 (0000h-03FFh) for the PIC16C505 are physically implemented. Refer to Figure 4-1. Accessing a location above this boundary will cause a wrap-around within the first 1K x 12 space. The effective reset vector is at 0000h, (see Figure 4-1). Location 03FFh contains the internal clock oscillator calibration value. This value should never be overwritten.

FIGURE 4-1: PROGRAM MEMORY MAP AND STACK FOR THE PIC16C505

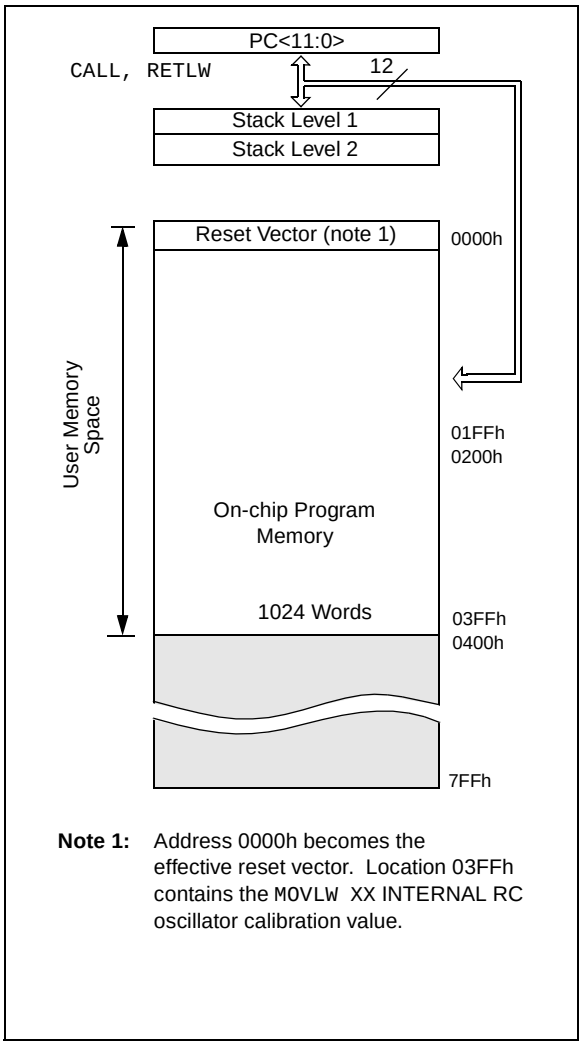

4.2 Data Memory Organization

Data memory is composed of registers or bytes of RAM. Therefore, data memory for a device is specified by its register file. The register file is divided into two functional groups: Special Function Registers and General Purpose Registers.

The Special Function Registers include the TMR0 register, the Program Counter (PCL), the Status Register, the I/O registers (ports) and the File Select Register (FSR). In addition, Special Function Registers are used to control the I/O port configuration and prescaler options.

The General Purpose Registers are used for data and control information under command of the instructions.

For the PIC16C505, the register file is composed of 8 Special Function Registers, 24 General Purpose Registers and 48 General Purpose Registers that may be addressed using a banking scheme (Figure 4-2).

4.2.1 GENERAL PURPOSE REGISTER FILE

The General Purpose Register file is accessed, either directly or indirectly, through the File Select Register FSR (Section 4.8).

FIGURE 4-2: PIC16C505 REGISTER FILE MAP

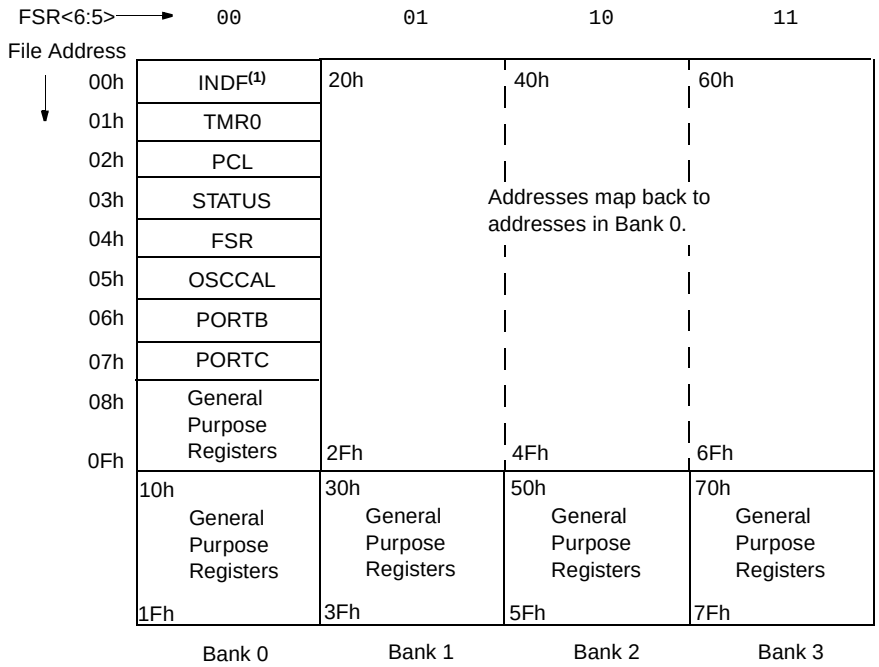

Note 1: Not a physical register.

© 1999 Microchip Technology Inc.

4.2.2 SPECIAL FUNCTION REGISTERS

The Special Function Registers (SFRs) are registers used by the CPU and peripheral functions to control the operation of the device (Table 4-1).

The Special Function Registers can be classified into two sets. The Special Function Registers associated with the “core” functions are described in this section. Those related to the operation of the peripheral features are described in the section for each peripheral feature.

TABLE 4-1: SPECIAL FUNCTION REGISTER (SFR) SUMMARY

Address	Name	Bit 7	Bit 6	Bit 5	Bit 4	Bit 3	Bit 2	Bit 1	Bit 0	Value on Power-On Reset	Value on All Other Resets(2)
00h	INDF	Uses contents of FSR to address data memory (not a physical register)								xxxx xxxx	uuuu uuuu
01h	TMR0	8-bit real-time clock/counter								xxxx xxxx	uuuu uuuu
02h(1)	PCL	Low order 8 bits of PC								1111 1111	1111 1111
03h	STATUS	RBWUF	—	PAO	$\overline{TO}$	$\overline{PD}$	Z	DC	C	0001 1xxx	q00q quuu(1)
04h	FSR	Indirect data memory address pointer								110x xxxx	11uu uuuu
05h	OSCCAL	CAL5	CAL4	CAL3	CAL2	CAL1	CAL0	—	—	1000 00--	uuuu uu--
N/A	TRISB	—	—	I/O control registers						--11 1111	--11 1111
N/A	TRISC	—	—	I/O control registers						--11 1111	--11 1111
N/A	OPTION	$\overline{RBWU}$	$\overline{RBPU}$	TOCS	TOSE	PSA	PS2	PS1	PS0	1111 1111	1111 1111
06h	PORTB	—	—	RB5	RB4	RB3	RB2	RB1	RB0	--xx xxxx	--uu uuuu
07h	PORTC	—	—	RC5	RC4	RC3	RC2	RC1	RC0	--xx xxxx	--uu uuuu

Legend: Shaded cells not used by Port Registers, read as ‘0’, — = unimplemented, read as ‘0’, x = unknown, u = unchanged, q = depends on condition.

Note 1: If reset was due to wake-up on pin change, then bit 7 = 1. All other rests will cause bit 7 = 0.

Note 2: Other (non-power-up) resets include external reset through $\overline{MCLR}$, watchdog timer and wake-up on pin change reset.

4.3 STATUS Register

This register contains the arithmetic status of the ALU, the RESET status and the page preselect bit.

The STATUS register can be the destination for any instruction, as with any other register. If the STATUS register is the destination for an instruction that affects the Z, DC or C bits, then the write to these three bits is disabled. These bits are set or cleared according to the device logic. Furthermore, the $\overline{TO}$ and $\overline{PD}$ bits are not writable. Therefore, the result of an instruction with the STATUS register as destination may be different than intended.

For example, `CLRF STATUS` will clear the upper three bits and set the Z bit. This leaves the STATUS register as `000u u1uu` (where u = unchanged).

It is recommended, therefore, that only `BCF`, `BSF` and `MOVWF` instructions be used to alter the STATUS register, because these instructions do not affect the Z, DC or C bits from the STATUS register. For other instructions, which do affect STATUS bits, see Instruction Set Summary.

REGISTER 4-1: STATUS REGISTER (ADDRESS:03h)

R/W-0	R/W-0	R/W-0	R-1	R-1	R/W-x	R/W-x	R/W-x
RBWUF	—	PA0	$\overline{TO}$	$\overline{PD}$	Z	DC	C
bit7	6	5	4	3	2	1	bit0

R = Readable bit
W = Writable bit
U = Unimplemented bit, read as ‘0’
- n = Value at POR reset

bit 7: **RBWUF**: I/O reset bit
`1` = Reset due to wake-up from SLEEP on pin change
`0` = After power up or other reset

bit 6: **Unimplemented**

bit 5: **PA0**: Program page preselect bits
`1` = Page 1 (200h - 3FFh)
`0` = Page 0 (000h - 1FFh)
Each page is 512 bytes.
Using the PA0 bit as a general purpose read/write bit in devices which do not use it for program page preselect is not recommended, since this may affect upward compatibility with future products.

bit 4: **$\overline{TO}$**: Time-out bit
`1` = After power-up, `CLRWDT` instruction, or `SLEEP` instruction
`0` = A WDT time-out occurred

bit 3: **$\overline{PD}$**: Power-down bit
`1` = After power-up or by the `CLRWDT` instruction
`0` = By execution of the `SLEEP` instruction

bit 2: **Z**: Zero bit
`1` = The result of an arithmetic or logic operation is zero
`0` = The result of an arithmetic or logic operation is not zero

bit 1: **DC**: Digit carry/$\overline{borrow}$ bit (for `ADDWF` and `SUBWF` instructions)
ADDWF
`1` = A carry from the 4th low order bit of the result occurred
`0` = A carry from the 4th low order bit of the result did not occur
SUBWF
`1` = A borrow from the 4th low order bit of the result did not occur
`0` = A borrow from the 4th low order bit of the result occurred

bit 0: **C**: Carry/$\overline{borrow}$ bit (for `ADDWF`, `SUBWF` and `RRF`, `RLF` instructions)

ADDWF	SUBWF	RRF or RLF
`1` = A carry occurred	`1` = A borrow did not occur	Load bit with LSB or MSB, respectively
`0` = A carry did not occur	`0` = A borrow occurred	

© 1999 Microchip Technology Inc.

4.4 OPTION Register

The OPTION register is a 8-bit wide, write-only register, which contains various control bits to configure the Timer0/WDT prescaler and Timer0.

By executing the `OPTION` instruction, the contents of the W register will be transferred to the OPTION register. A RESET sets the OPTION<7:0> bits.

> **Note:** If TRIS bit is set to ‘0’, the wake-up on change and pull-up functions are disabled for that pin (i.e., note that TRIS overrides OPTION control of $\overline{\text{RBPU}}$ and $\overline{\text{RBWU}}$).

REGISTER 4-2: OPTION REGISTER

W-1	W-1	W-1	W-1	W-1	W-1	W-1	W-1
$\overline{\text{RBWU}}$	$\overline{\text{RBPU}}$	T0CS	T0SE	PSA	PS2	PS1	PS0
bit7	6	5	4	3	2	1	bit0

R = Readable bit
W = Writable bit
U = Unimplemented bit, read as ‘0’
- n = Value at POR reset

bit 7: **$\overline{\text{RBWU}}$:** Enable wake-up on pin change (RB0, RB1, RB3, RB4)
`1` = Disabled
`0` = Enabled

bit 6: **$\overline{\text{RBPU}}$**: Enable weak pull-ups (RB0, RB1, RB3, RB4)
`1` = Disabled
`0` = Enabled

bit 5: **T0CS**: Timer0 clock source select bit
`1` = Transition on T0CKI pin (overrides TRIS <RC57>
`0` = Transition on internal instruction cycle clock, Fosc/4

bit 4: **T0SE**: Timer0 source edge select bit
`1` = Increment on high to low transition on the T0CKI pin
`0` = Increment on low to high transition on the T0CKI pin

bit 3: **PSA**: Prescaler assignment bit
`1` = Prescaler assigned to the WDT
`0` = Prescaler assigned to Timer0

bit 2-0: **PS<2:0>:** Prescaler rate select bits

Bit Value	Timer0 Rate	WDT Rate
000	1 : 2	1 : 1
001	1 : 4	1 : 2
010	1 : 8	1 : 4
011	1 : 16	1 : 8
100	1 : 32	1 : 16
101	1 : 64	1 : 32
110	1 : 128	1 : 64
111	1 : 256	1 : 128

4.5 OSCCAL Register

The Oscillator Calibration (OSCCAL) register is used to calibrate the internal 4 MHz oscillator. It contains six bits for calibration

Note:	Please note that erasing the device will also erase the pre-programmed internal calibration value for the internal oscillator. The calibration value must be read prior to erasing the part, so it can be reprogrammed correctly later.

After you move in the calibration constant, do not change the value. See Section 7.2.5

REGISTER 4-3: OSCCAL REGISTER (ADDRESS 05h) PIC16C505

R/W-1	R/W-0	R/W-0	R/W-0	R/W-0	R/W-0	U-0	U-0
CAL5	CAL4	CAL3	CAL2	CAL1	CAL0	—	—
bit7							bit0

R = Readable bit
W = Writable bit
U = Unimplemented bit, read as ‘0’
- n = Value at POR reset

bit 7-2: **CAL<5:0>:** Calibration

bit 1-0: Unimplemented read as ‘0’

© 1999 Microchip Technology Inc.

4.6 Program Counter

As a program instruction is executed, the Program Counter (PC) will contain the address of the next program instruction to be executed. The PC value is increased by one every instruction cycle, unless an instruction changes the PC.

For a `GOTO` instruction, bits 8:0 of the PC are provided by the `GOTO` instruction word. The PC Latch (PCL) is mapped to PC<7:0>. Bit 5 of the STATUS register provides page information to bit 9 of the PC (Figure 4-3).

For a `CALL` instruction, or any instruction where the PCL is the destination, bits 7:0 of the PC again are provided by the instruction word. However, PC<8> does not come from the instruction word, but is always cleared (Figure 4-3).

Instructions where the PCL is the destination, or Modify PCL instructions, include `MOVWF PC`, `ADDWF PC`, and `BSF PC,5`.

Note:	Because PC<8> is cleared in the `CALL` instruction or any Modify PCL instruction, all subroutine calls or computed jumps are limited to the first 256 locations of any program memory page (512 words long).

FIGURE 4-3: LOADING OF PC BRANCH INSTRUCTIONS - PIC16C505

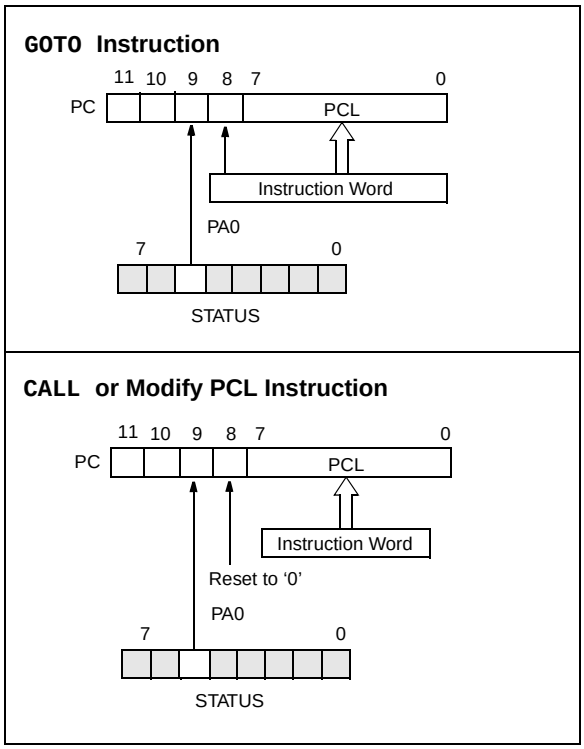

4.6.1 EFFECTS OF RESET

The Program Counter is set upon a RESET, which means that the PC addresses the last location in the last page (i.e., the oscillator calibration instruction.) After executing `MOVLW XX`, the PC will roll over to location 00h and begin executing user code.

The STATUS register page preselect bits are cleared upon a RESET, which means that page 0 is preselected.

Therefore, upon a RESET, a `GOTO` instruction will automatically cause the program to jump to page 0 until the value of the page bits is altered.

4.7 Stack

PIC16C505 devices have a 12-bit wide hardware push/pop stack.

A `CALL` instruction will push the current value of stack 1 into stack 2 and then push the current program counter value, incremented by one, into stack level 1. If more than two sequential `CALL`'s are executed, only the most recent two return addresses are stored.

A `RETLW` instruction will pop the contents of stack level 1 into the program counter and then copy stack level 2 contents into level 1. If more than two sequential `RETLW`'s are executed, the stack will be filled with the address previously stored in level 2. Note that the W register will be loaded with the literal value specified in the instruction. This is particularly useful for the implementation of data look-up tables within the program memory.

Note 1:	There are no STATUS bits to indicate stack overflows or stack underflow conditions.
Note 2:	There are no instructions mnemonics called `PUSH` or `POP`. These are actions that occur from the execution of the `CALL`, `RETLW`, and instructions.

4.8 Indirect Data Addressing; INDF and FSR Registers

The INDF register is not a physical register. Addressing INDF actually addresses the register whose address is contained in the FSR register (FSR is a *pointer*). This is indirect addressing.

EXAMPLE 4-1: INDIRECT ADDRESSING

- Register file 07 contains the value 10h
- Register file 08 contains the value 0Ah
- Load the value 07 into the FSR register
- A read of the INDF register will return the value of 10h
- Increment the value of the FSR register by one (FSR = 08)
- A read of the INDR register now will return the value of 0Ah.

Reading INDF itself indirectly (FSR = 0) will produce 00h. Writing to the INDF register indirectly results in a no-operation (although STATUS bits may be affected).

A simple program to clear RAM locations 10h-1Fh using indirect addressing is shown in Example 4-2.

EXAMPLE 4-2: HOW TO CLEAR RAM USING INDIRECT ADDRESSING

```
            movlw   0x10    ;initialize pointer
            movwf   FSR     ; to RAM
NEXT        clrf    INDF    ;clear INDF register
            incf    FSR,F   ;inc pointer
            btfsc   FSR,4   ;all done?
            goto    NEXT    ;NO, clear next
CONTINUE
            :               ;YES, continue
            :
```

The FSR is a 5-bit wide register. It is used in conjunction with the INDF register to indirectly address the data memory area.

The FSR<4:0> bits are used to select data memory addresses 00h to 1Fh.

The device uses FSR<6:5> to select between banks 0:3.

FIGURE 4-4: DIRECT/INDIRECT ADDRESSING

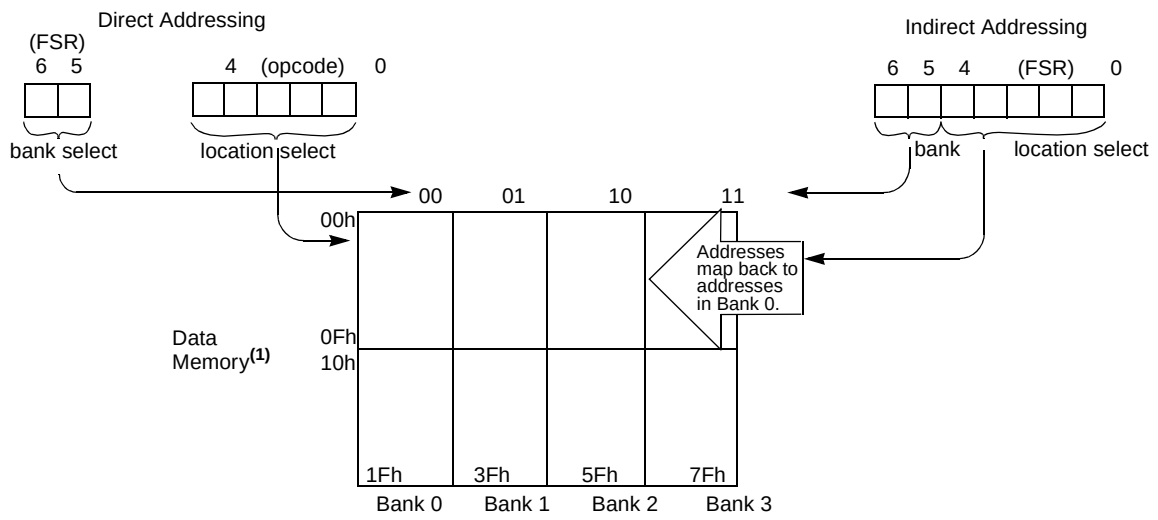

Note 1: For register map detail see Section 4.2.

© 1999 Microchip Technology Inc.

5.0 I/O PORT

As with any other register, the I/O register can be written and read under program control. However, read instructions (e.g., `MOVF PORTB,W`) always read the I/O pins independent of the pin's input/output modes. On RESET, all I/O ports are defined as input (inputs are at hi-impedance) since the I/O control registers are all set.

5.1 PORTB

PORTB is an 8-bit I/O register. Only the low order 6 bits are used (RB<5:0>). Bits 7 and 6 are unimplemented and read as '0's. Please note that RB3 is an input only pin. The configuration word can set several I/O's to alternate functions. When acting as alternate functions, the pins will read as '0' during port read. Pins RB0, RB1, RB3 and RB4 can be configured with weak pull-ups and also with wake-up on change. The wake-up on change and weak pull-up functions are not pin selectable. If pin 4 is configured as $\overline{\text{MCLR}}$, weak pull-up is always off and wake-up on change for this pin is not enabled.

5.2 PORTC

PORTC is an 8-bit I/O register. Only the low order 6 bits are used (RC<5:0>). Bits 7 and 6 are unimplemented and read as '0's.

5.3 TRIS Registers

The output driver control register is loaded with the contents of the W register by executing the `TRIS f` instruction. A '1' from a TRIS register bit puts the corresponding output driver in a hi-impedance mode. A '0' puts the contents of the output data latch on the selected pins, enabling the output buffer. The exceptions are RB3, which is input only, and RC5, which may be controlled by the option register. See Register 4-2.

Note:	A read of the ports reads the pins, not the output data latches. That is, if an output driver on a pin is enabled and driven high, but the external system is holding it low, a read of the port will indicate that the pin is low.

The TRIS registers are "write-only" and are set (output drivers disabled) upon RESET.

5.4 I/O Interfacing

The equivalent circuit for an I/O port pin is shown in Figure 5-1. All port pins except RB3, which is input only, may be used for both input and output operations. For input operations, these ports are non-latching. Any input must be present until read by an input instruction (e.g., `MOVF PORTB,W`). The outputs are latched and remain unchanged until the output latch is rewritten. To use a port pin as output, the corresponding direction control bit in TRIS must be cleared (= 0). For use as an input, the corresponding TRIS bit must be set. Any I/O pin (except RB3) can be programmed individually as input or output.

FIGURE 5-1: EQUIVALENT CIRCUIT FOR A SINGLE I/O PIN

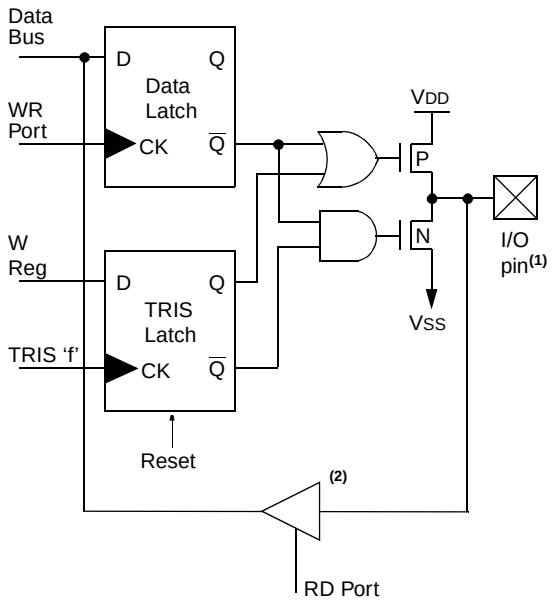

Note 1: I/O pins have protection diodes to VDD and VSS.

Note 2: See Table 3-1 for buffer type.

TABLE 5-1: SUMMARY OF PORT REGISTERS

Address	Name	Bit 7	Bit 6	Bit 5	Bit 4	Bit 3	Bit 2	Bit 1	Bit 0	Value on Power-On Reset	Value on All Other Resets
N/A	TRISB	—	—	I/O control registers						--11 1111	--11 1111
N/A	TRISC	—	—	I/O control registers						--11 1111	--11 1111
N/A	OPTION	$\overline{\text{RBWU}}$	$\overline{\text{RBPU}}$	TOCS	TOSE	PSA	PS2	PS1	PS0	1111 1111	1111 1111
03h	STATUS	RBWUF	—	PAO	$\overline{\text{TO}}$	$\overline{\text{PD}}$	Z	DC	C	0001 1xxx	q00q quuu(1)
06h	PORTB	—	—	RB5	RB4	RB3	RB2	RB1	RB0	--xx xxxx	--uu uuuu
07h	PORTC	—	—	RC5	RC4	RC3	RC2	RC1	RC0	--xx xxxx	--uu uuuu

Legend: Shaded cells not used by Port Registers, read as ‘0’, — = unimplemented, read as ‘0’, x = unknown, u = unchanged, q = depends on condition.

Note 1: If reset was due to wake-up on pin change, then bit 7 = 1. All other rests will cause bit 7 = 0.

5.5 I/O Programming Considerations

5.5.1 BI-DIRECTIONAL I/O PORTS

Some instructions operate internally as read followed by write operations. The BCF and BSF instructions, for example, read the entire port into the CPU, execute the bit operation and re-write the result. Caution must be used when these instructions are applied to a port where one or more pins are used as input/outputs. For example, a BSF operation on bit5 of PORTB will cause all eight bits of PORTB to be read into the CPU, bit5 to be set and the PORTB value to be written to the output latches. If another bit of PORTB is used as a bi-directional I/O pin (say bit0) and it is defined as an input at this time, the input signal present on the pin itself would be read into the CPU and rewritten to the data latch of this particular pin, overwriting the previous content. As long as the pin stays in the input mode, no problem occurs. However, if bit0 is switched into output mode later on, the content of the data latch may now be unknown.

Example 5-1 shows the effect of two sequential read-modify-write instructions (e.g., BCF, BSF, etc.) on an I/O port.

A pin actively outputting a high or a low should not be driven from external devices at the same time in order to change the level on this pin (“wired-or”, “wired-and”). The resulting high output currents may damage the chip.

EXAMPLE 5-1: READ-MODIFY-WRITE INSTRUCTIONS ON AN I/O PORT

```
;Initial PORTB Settings
; PORTB<5:3> Inputs
; PORTB<2:0> Outputs
;
;                    PORTB latch  PORTB pins
;                    ----------   ----------
  BCF   PORTB, 5     ;--01 -ppp   --11 pppp
  BCF   PORTB, 4     ;--10 -ppp   --11 pppp
  MOVLW 007h         ;
  TRIS  PORTB        ;--10 -ppp   --11 pppp
;
;Note that the user may have expected the pin
;values to be --00 pppp. The 2nd BCF caused
;RB5 to be latched as the pin value (High).
```

5.5.2 SUCCESSIVE OPERATIONS ON I/O PORTS

The actual write to an I/O port happens at the end of an instruction cycle, whereas for reading, the data must be valid at the beginning of the instruction cycle (Figure 5-2). Therefore, care must be exercised if a write followed by a read operation is carried out on the same I/O port. The sequence of instructions should allow the pin voltage to stabilize (load dependent) before the next instruction causes that file to be read into the CPU. Otherwise, the previous state of that pin may be read into the CPU rather than the new state. When in doubt, it is better to separate these instructions with a NOP or another instruction not accessing this I/O port.

© 1999 Microchip Technology Inc.

FIGURE 5-2: SUCCESSIVE I/O OPERATION

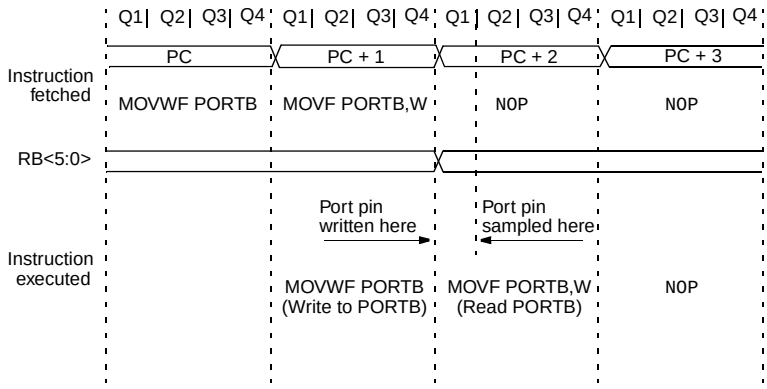

This example shows a write to PORTB followed by a read from PORTB.

Data setup time = (0.25 T_{CY} – T_{PD})

where: T_{CY} = instruction cycle.

T_{PD} = propagation delay

Therefore, at higher clock frequencies, a write followed by a read may be problematic.

NOTES:

© 1999 Microchip Technology Inc.

6.0 TIMER0 MODULE AND TMR0 REGISTER

The Timer0 module has the following features:

- 8-bit timer/counter register, TMR0
  - Readable and writable
- 8-bit software programmable prescaler
- Internal or external clock select
  - Edge select for external clock

Figure 6-1 is a simplified block diagram of the Timer0 module.

Timer mode is selected by clearing the T0CS bit (OPTION<5>). In timer mode, the Timer0 module will increment every instruction cycle (without prescaler). If TMR0 register is written, the increment is inhibited for the following two cycles (Figure 6-2 and Figure 6-3). The user can work around this by writing an adjusted value to the TMR0 register.

Counter mode is selected by setting the T0CS bit (OPTION<5>). In this mode, Timer0 will increment either on every rising or falling edge of pin T0CKI. The T0SE bit (OPTION<4>) determines the source edge. Clearing the T0SE bit selects the rising edge. Restrictions on the external clock input are discussed in detail in Section 6.1.

The prescaler may be used by either the Timer0 module or the Watchdog Timer, but not both. The prescaler assignment is controlled in software by the control bit PSA (OPTION<3>). Clearing the PSA bit will assign the prescaler to Timer0. The prescaler is not readable or writable. When the prescaler is assigned to the Timer0 module, prescale values of 1:2, 1:4,..., 1:256 are selectable. Section 6.2 details the operation of the prescaler.

A summary of registers associated with the Timer0 module is found in Table 6-1.

FIGURE 6-1: TIMER0 BLOCK DIAGRAM

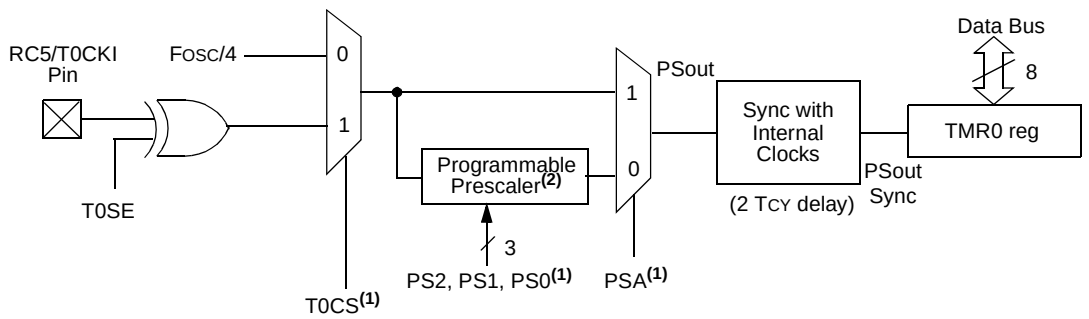

Note 1: Bits T0CS, T0SE, PSA, PS2, PS1 and PS0 are located in the OPTION register.
2: The prescaler is shared with the Watchdog Timer (Figure 6-5).

FIGURE 6-2: TIMER0 TIMING: INTERNAL CLOCK/NO PRESCALE

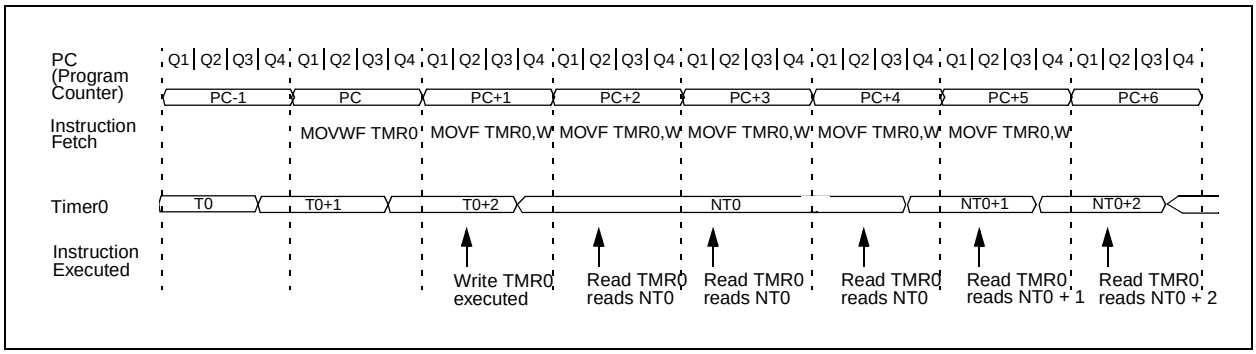

FIGURE 6-3: TIMER0 TIMING: INTERNAL CLOCK/PRESCALE 1:2

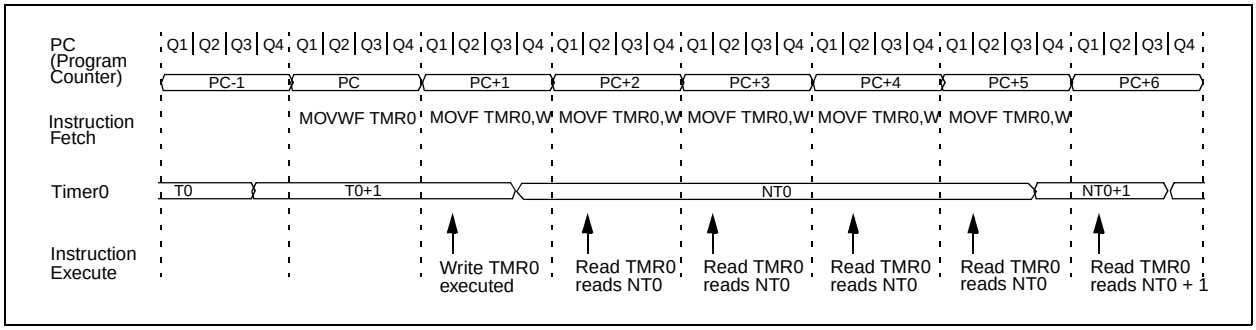

TABLE 6-1: REGISTERS ASSOCIATED WITH TIMER0

Address	Name	Bit 7	Bit 6	Bit 5	Bit 4	Bit 3	Bit 2	Bit 1	Bit 0	Value on Power-On Reset	Value on All Other Resets
01h	TMR0	Timer0 - 8-bit real-time clock/counter								xxxx xxxx	uuuu uuuu
N/A	OPTION	$\overline{\text{RBWU}}$	$\overline{\text{RBPU}}$	T0CS	T0SE	PSA	PS2	PS1	PS0	1111 1111	1111 1111
N/A	TRISC	—	—	RC5	RC4	RC3	RC2	RC1	RC0	--11 1111	--11 1111

Legend: Shaded cells not used by Timer0, - = unimplemented, x = unknown, u = unchanged.

© 1999 Microchip Technology Inc.

6.1 Using Timer0 with an External Clock

When an external clock input is used for Timer0, it must meet certain requirements. The external clock requirement is due to internal phase clock (TOSC) synchronization. Also, there is a delay in the actual incrementing of Timer0 after synchronization.

6.1.1 EXTERNAL CLOCK SYNCHRONIZATION

When no prescaler is used, the external clock input is the same as the prescaler output. The synchronization of T0CKI with the internal phase clocks is accomplished by sampling the prescaler output on the Q2 and Q4 cycles of the internal phase clocks (Figure 6-4). Therefore, it is necessary for T0CKI to be high for at least 2TOSC (and a small RC delay of 20 ns) and low for at least 2TOSC (and a small RC delay of 20 ns). Refer to the electrical specification of the desired device.

When a prescaler is used, the external clock input is divided by the asynchronous ripple counter-type prescaler, so that the prescaler output is symmetrical. For the external clock to meet the sampling requirement, the ripple counter must be taken into account. Therefore, it is necessary for T0CKI to have a period of at least 4TOSC (and a small RC delay of 40 ns) divided by the prescaler value. The only requirement on T0CKI high and low time is that they do not violate the minimum pulse width requirement of 10 ns. Refer to parameters 40, 41 and 42 in the electrical specification of the desired device.

6.1.2 TIMER0 INCREMENT DELAY

Since the prescaler output is synchronized with the internal clocks, there is a small delay from the time the external clock edge occurs to the time the Timer0 module is actually incremented. Figure 6-4 shows the delay from the external clock edge to the timer incrementing.

FIGURE 6-4: TIMER0 TIMING WITH EXTERNAL CLOCK

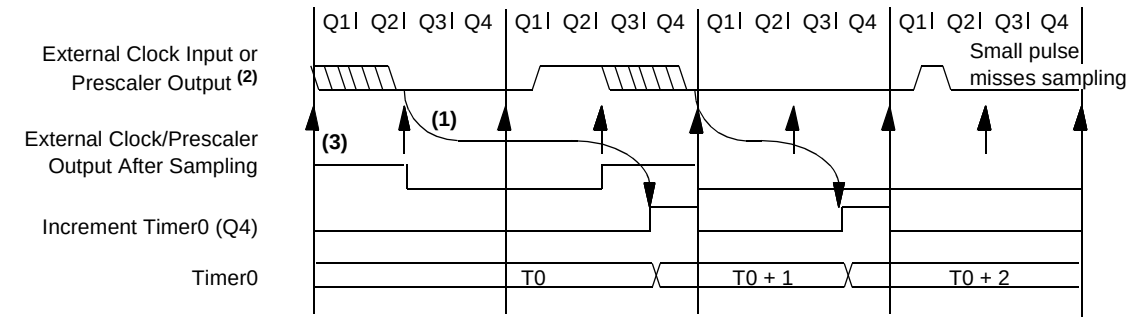

Note 1: Delay from clock input change to Timer0 increment is 3Tosc to 7Tosc. (Duration of Q = Tosc). Therefore, the error in measuring the interval between two edges on Timer0 input = ± 4Tosc max.
2: External clock if no prescaler selected; prescaler output otherwise.
3: The arrows indicate the points in time where sampling occurs.

6.2 Prescaler

An 8-bit counter is available as a prescaler for the Timer0 module or as a postscaler for the Watchdog Timer (WDT), respectively (Section 7.6). For simplicity, this counter is being referred to as “prescaler” throughout this data sheet. Note that the prescaler may be used by either the Timer0 module or the WDT, but not both. Thus, a prescaler assignment for the Timer0 module means that there is no prescaler for the WDT, and vice-versa.

The PSA and PS<2:0> bits (OPTION<3:0>) determine prescaler assignment and prescale ratio.

When assigned to the Timer0 module, all instructions writing to the TMR0 register (e.g., `CLRF 1`, `MOVWF 1`, `BSF 1,x`, etc.) will clear the prescaler. When assigned to WDT, a `CLRWDT` instruction will clear the prescaler along with the WDT. The prescaler is neither readable nor writable. On a RESET, the prescaler contains all '0's.

6.2.1 SWITCHING PRESCALER ASSIGNMENT

The prescaler assignment is fully under software control (i.e., it can be changed “on-the-fly” during program execution). To avoid an unintended device RESET, the following instruction sequence (Example 6-1) must be executed when changing the prescaler assignment from Timer0 to the WDT.

EXAMPLE 6-1: CHANGING PRESCALER (TIMER0→WDT)

```
1.CLRWDT              ;Clear WDT
2.CLRF   TMR0         ;Clear TMR0 & Prescaler
3.MOVLW  '00xx1111’b  ;These 3 lines (5, 6, 7)
4.OPTION              ; are required only if
                      ; desired
5.CLRWDT              ;PS<2:0> are 000 or 001
6.MOVLW  '00xx1xxx’b  ;Set Postscaler to
7.OPTION              ; desired WDT rate
```

To change prescaler from the WDT to the Timer0 module, use the sequence shown in Example 6-2. This sequence must be used even if the WDT is disabled. A `CLRWDT` instruction should be executed before switching the prescaler.

EXAMPLE 6-2: CHANGING PRESCALER (WDT→TIMER0)

```
CLRWDT                ;Clear WDT and
                      ;prescaler
MOVLW   'xxxx0xxx'    ;Select TMR0, new
                      ;prescale value and
                      ;clock source
OPTION
```

FIGURE 6-5: BLOCK DIAGRAM OF THE TIMER0/WDT PRESCALER

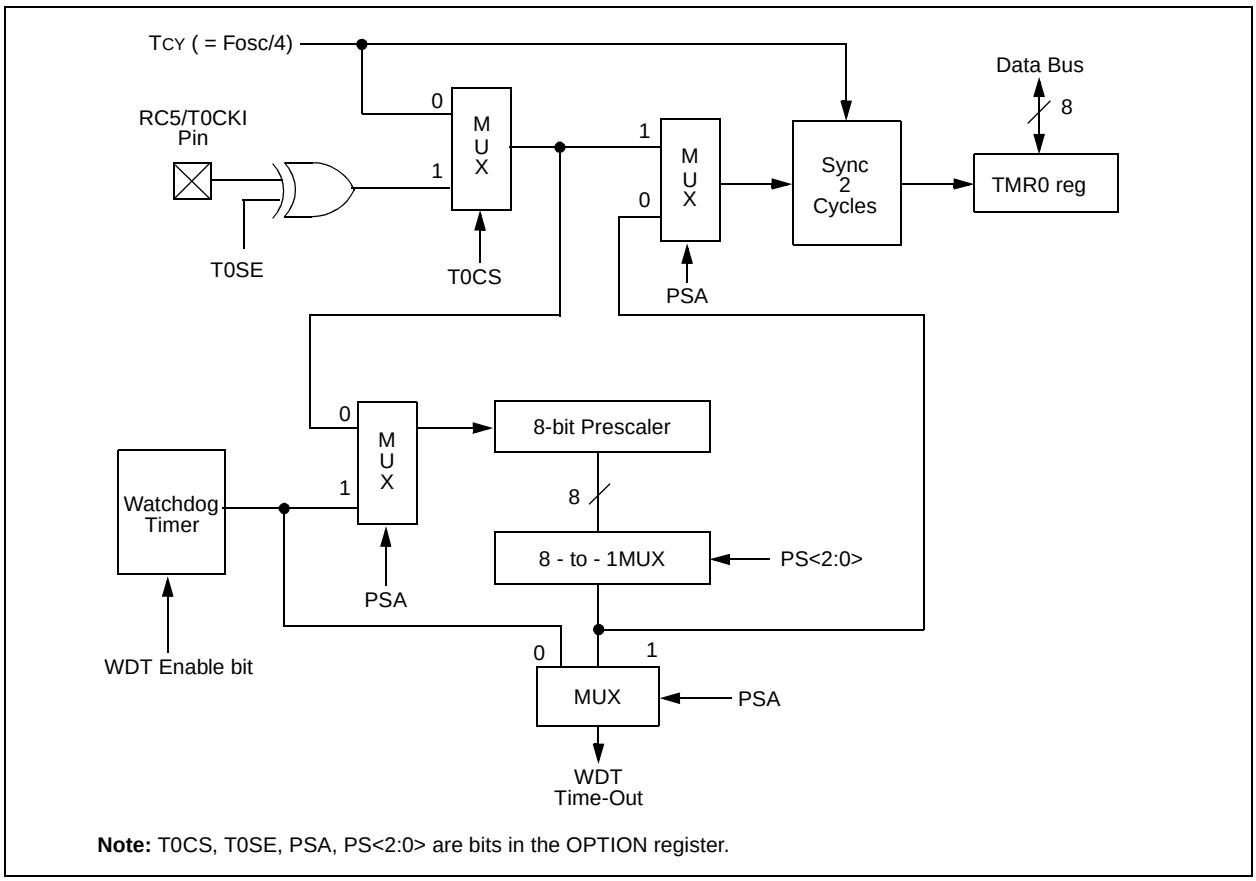

Note: T0CS, T0SE, PSA, PS<2:0> are bits in the OPTION register.

© 1999 Microchip Technology Inc.

7.0 SPECIAL FEATURES OF THE CPU

What sets a microcontroller apart from other processors are special circuits to deal with the needs of real-time applications. The PIC16C505 microcontroller has a host of such features intended to maximize system reliability, minimize cost through elimination of external components, provide power saving operating modes and offer code protection. These features are:

- Oscillator selection
- Reset
  - Power-On Reset (POR)
  - Device Reset Timer (DRT)
  - Wake-up from SLEEP on pin change
- Watchdog Timer (WDT)
- SLEEP
- Code protection
- ID locations
- In-circuit Serial Programming
- Clock Out

The PIC16C505 has a Watchdog Timer, which can be shut off only through configuration bit WDTE. It runs off of its own RC oscillator for added reliability. If using HS, XT or LP selectable oscillator options, there is always an 18 ms (nominal) delay provided by the Device Reset Timer (DRT), intended to keep the chip in reset until the crystal oscillator is stable. If using INTRC or EXTRC, there is an 18 ms delay only on V_{DD} power-up. With this timer on-chip, most applications need no external reset circuitry.

The SLEEP mode is designed to offer a very low current power-down mode. The user can wake-up from SLEEP through a change on input pins or through a Watchdog Timer time-out. Several oscillator options are also made available to allow the part to fit the application, including an internal 4 MHz oscillator. The EXTRC oscillator option saves system cost while the LP crystal option saves power. A set of configuration bits are used to select various options.

7.1 Configuration Bits

The PIC16C505 configuration word consists of 12 bits. Configuration bits can be programmed to select various device configurations. Three bits are for the selection of the oscillator type, one bit is the Watchdog Timer enable bit, and one bit is the $\overline{MCLR}$ enable bit. Seven bits are for code protection (Register 7-1).

REGISTER 7-1: CONFIGURATION WORD FOR PIC16C505

CP	CP	CP	CP	CP	CP	MCLRE	CP	WDTE	FOSC2	FOSC1	FOSC0
bit11	10	9	8	7	6	5	4	3	2	1	bit0

Register:	CONFIG
Address(2):	0FFFh

bit 11-6, 4: **CP Code Protection bits** (1)(2)(3)

bit 5: **MCLRE:** RB3/$\overline{MCLR}$ pin function select
1 = RB3/$\overline{MCLR}$ pin function is $\overline{MCLR}$
0 = RB3/$\overline{MCLR}$ pin function is digital I/O, $\overline{MCLR}$ internally tied to V_{DD}

bit 3: **WDTE:** Watchdog timer enable bit
1 = WDT enabled
0 = WDT disabled

bit 2-0: **FOSC<1:0>:** Oscillator Selection bits
111 = external RC oscillator/CLKOUT function on RB4/OSC2/CLKOUT pin
110 = external RC oscillator/RB4 function on RB4/OSC2/CLKOUT pin
101 = internal RC oscillator/CLKOUT function on RB4/OSC2/CLKOUT pin
100 = internal RC oscillator/RB4 function on RB4/OSC2/CLKOUT pin
011 = invalid selection
010 = HS oscillator
001 = XT oscillator
000 = LP oscillator

Note 1: 03FFh is always uncode protected on the PIC16C505. This location contains the MOVLWxx calibration instruction for the INTRC.
2: Refer to the PIC16C505 Programming Specifications to determine how to access the configuration word. This register is not user addressable during device operation.
3: All code protect bits must be written to the same value.

7.2 Oscillator Configurations

7.2.1 OSCILLATOR TYPES

The PIC16C505 can be operated in four different oscillator modes. The user can program three configuration bits (FOSC<2:0>) to select one of these four modes:

- LP: Low Power Crystal
- XT: Crystal/Resonator
- HS: High Speed Crystal/Resonator
- INTRC: Internal 4 MHz Oscillator
- EXTRC: External Resistor/Capacitor

7.2.2 CRYSTAL OSCILLATOR / CERAMIC RESONATORS

In HS, XT or LP modes, a crystal or ceramic resonator is connected to the RB5/OSC1/CLKIN and RB4/OSC2/CLKOUT pins to establish oscillation (Figure 7-1). The PIC16C505 oscillator design requires the use of a parallel cut crystal. Use of a series cut crystal may give a frequency out of the crystal manufacturers specifications. When in HS, XT or LP modes, the device can have an external clock source drive the RB5/OSC1/CLKIN pin (Figure 7-2).

FIGURE 7-1: CRYSTAL OPERATION (OR CERAMIC RESONATOR) (HS, XT OR LP OSC CONFIGURATION)

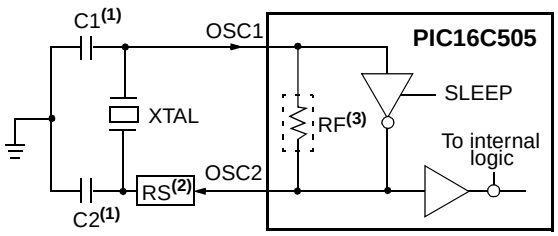

Note 1: See Capacitor Selection tables for recommended values of C1 and C2.
2: A series resistor (RS) may be required for AT strip cut crystals.
3: RF approx. value = 10 MΩ.

FIGURE 7-2: EXTERNAL CLOCK INPUT OPERATION (HS, XT OR LP OSC CONFIGURATION)

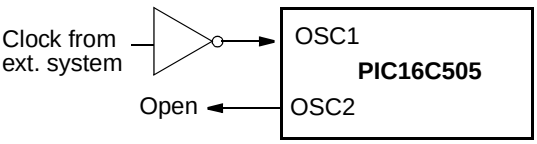

TABLE 7-1: CAPACITOR SELECTION FOR CERAMIC RESONATORS - PIC16C505

Osc Type	Resonator Freq	Cap. Range C1	Cap. Range C2
XT	4.0 MHz	30 pF	30 pF
HS	16 MHz	10-47 pF	10-47 pF

These values are for design guidance only. Since each resonator has its own characteristics, the user should consult the resonator manufacturer for appropriate values of external components.

TABLE 7-2: CAPACITOR SELECTION FOR CRYSTAL OSCILLATOR - PIC16C505

Osc Type	Resonator Freq	Cap.Range C1	Cap. Range C2
LP	32 kHz(1)	15 pF	15 pF
XT	200 kHz 1 MHz 4 MHz	47-68 pF 15 pF 15 pF	47-68 pF 15 pF 15 pF
HS	20 MHz	15-47 pF	15-47 pF

Note 1: For V_{DD} > 4.5V, C1 = C2 ≈ 30 pF is recommended.

These values are for design guidance only. Rs may be required to avoid overdriving crystals with low drive level specification. Since each crystal has its own characteristics, the user should consult the crystal manufacturer for appropriate values of external components.

© 1999 Microchip Technology Inc.

7.2.3 EXTERNAL CRYSTAL OSCILLATOR CIRCUIT

Either a prepackaged oscillator or a simple oscillator circuit with TTL gates can be used as an external crystal oscillator circuit. Prepackaged oscillators provide a wide operating range and better stability. A well-designed crystal oscillator will provide good performance with TTL gates. Two types of crystal oscillator circuits can be used: one with parallel resonance, or one with series resonance.

Figure 7-3 shows implementation of a parallel resonant oscillator circuit. The circuit is designed to use the fundamental frequency of the crystal. The 74AS04 inverter performs the 180-degree phase shift that a parallel oscillator requires. The 4.7 kΩ resistor provides the negative feedback for stability. The 10 kΩ potentiometers bias the 74AS04 in the linear region. This circuit could be used for external oscillator designs.

FIGURE 7-3: EXTERNAL PARALLEL RESONANT CRYSTAL OSCILLATOR CIRCUIT

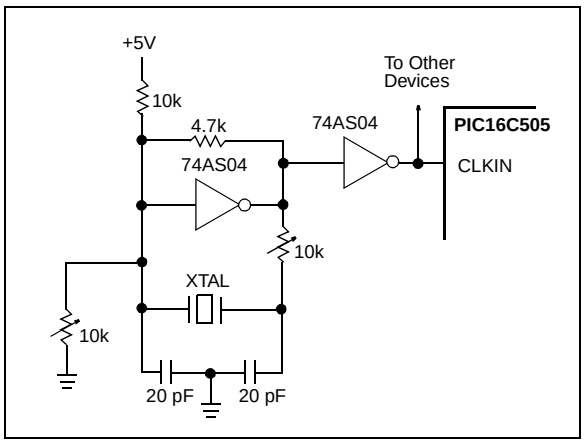

Figure 7-4 shows a series resonant oscillator circuit. This circuit is also designed to use the fundamental frequency of the crystal. The inverter performs a 180-degree phase shift in a series resonant oscillator circuit. The 330 Ω resistors provide the negative feedback to bias the inverters in their linear region.

FIGURE 7-4: EXTERNAL SERIES RESONANT CRYSTAL OSCILLATOR CIRCUIT

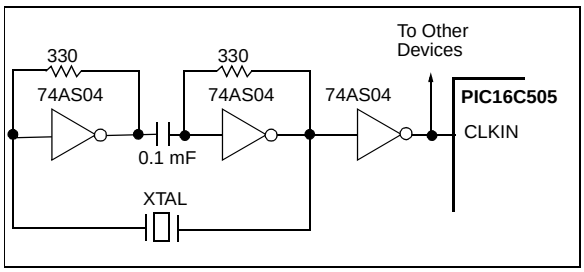

7.2.4 EXTERNAL RC OSCILLATOR

For timing insensitive applications, the RC device option offers additional cost savings. The RC oscillator frequency is a function of the supply voltage, the resistor (Rext) and capacitor (Cext) values, and the operating temperature. In addition to this, the oscillator frequency will vary from unit to unit due to normal process parameter variation. Furthermore, the difference in lead frame capacitance between package types will also affect the oscillation frequency, especially for low Cext values. The user also needs to take into account variation due to tolerance of external R and C components used.

Figure 7-5 shows how the R/C combination is connected to the PIC16C505. For Rext values below 2.2 kΩ, the oscillator operation may become unstable, or stop completely. For very high Rext values (e.g., 1 MΩ) the oscillator becomes sensitive to noise, humidity and leakage. Thus, we recommend keeping Rext between 3 kΩ and 100 kΩ.

Although the oscillator will operate with no external capacitor (Cext = 0 pF), we recommend using values above 20 pF for noise and stability reasons. With no or small external capacitance, the oscillation frequency can vary dramatically due to changes in external capacitances, such as PCB trace capacitance or package lead frame capacitance.

The Electrical Specifications section shows RC frequency variation from part to part due to normal process variation. The variation is larger for larger values of R (since leakage current variation will affect RC frequency more for large R) and for smaller values of C (since variation of input capacitance will affect RC frequency more).

Also, see the Electrical Specifications section for variation of oscillator frequency due to V_{DD} for given Rext/Cext values, as well as frequency variation due to operating temperature for given R, C and V_{DD} values.

FIGURE 7-5: EXTERNAL RC OSCILLATOR MODE

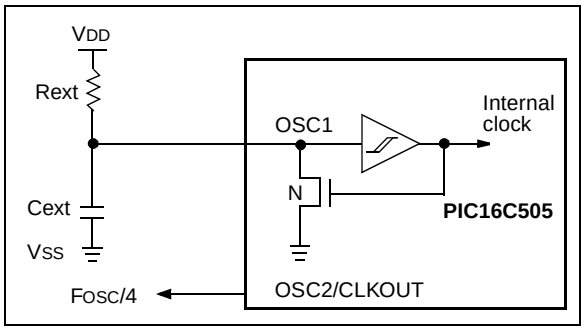

7.2.5 INTERNAL 4 MHz RC OSCILLATOR

The internal RC oscillator provides a fixed 4 MHz (nominal) system clock at V_{DD} = 5V and 25°C, see Electrical Specifications section for information on variation over voltage and temperature.

In addition, a calibration instruction is programmed into the last address of memory, which contains the calibration value for the internal RC oscillator. This location is always protected, regardless of the code protect settings. This value is programmed as a `MOVLW XX` instruction where XX is the calibration value, and is placed at the reset vector. This will load the W register with the calibration value upon reset and the PC will then roll over to the users program at address 0x000. The user then has the option of writing the value to the OSCCAL Register (05h) or ignoring it.

OSCCAL, when written to with the calibration value, will "trim" the internal oscillator to remove process variation from the oscillator frequency.

Note:	Please note that erasing the device will also erase the pre-programmed internal calibration value for the internal oscillator. The calibration value must be read prior to erasing the part so it can be reprogrammed correctly later.

For the PIC16C505, only bits <7:2> of OSCCAL are implemented.

7.3 RESET

The device differentiates between various kinds of reset:

a) Power on reset (POR)

b) $\overline{\text{MCLR}}$ reset during normal operation

c) $\overline{\text{MCLR}}$ reset during SLEEP

d) WDT time-out reset during normal operation

e) WDT time-out reset during SLEEP

f) Wake-up from SLEEP on pin change

Some registers are not reset in any way, they are unknown on POR and unchanged in any other reset. Most other registers are reset to "reset state" on power-on reset (POR), $\overline{\text{MCLR}}$, WDT or wake-up on pin change reset during normal operation. They are not affected by a WDT reset during SLEEP or $\overline{\text{MCLR}}$ reset during SLEEP, since these resets are viewed as resumption of normal operation. The exceptions to this are $\overline{\text{TO}}$, $\overline{\text{PD}}$ and RBWUF bits. They are set or cleared differently in different reset situations. These bits are used in software to determine the nature of reset. See Table 7-3 for a full description of reset states of all registers.

© 1999 Microchip Technology Inc.

TABLE 7-3: RESET CONDITIONS FOR REGISTERS

Register	Address	Power-on Reset	$\overline{\text{MCLR}}$ Reset WDT time-out Wake-up on Pin Change
W	—	qqqq qqqq(1)	qqqq qqqq(1)
INDF	00h	xxxx xxxx	uuuu uuuu
TMR0	01h	xxxx xxxx	uuuu uuuu
PC	02h	1111 1111	1111 1111
STATUS	03h	0001 1xxx	q00q quuu(2,3)
FSR	04h	110x xxxx	11uu uuuu
OSCCAL	05h	1000 00--	uuuu uu--
PORTB	06h	--xx xxxxx	--uu uuuu
PORTC	07h	--xx xxxxx	--uu uuuu
OPTION	—	1111 1111	1111 1111
TRISB	—	--11 1111	--11 1111
TRISC	—	--11 1111	--11 1111

Legend: u = unchanged, x = unknown, - = unimplemented bit, read as ‘0’, q = value depends on condition.

Note 1: Bits <7:2> of W register contain oscillator calibration values due to `MOVLW XX` instruction at top of memory.

Note 2: See Table 7-7 for reset value for specific conditions.

Note 3: If reset was due to wake-up on pin change, then bit 7 = 1. All other resets will cause bit 7 = 0.

TABLE 7-4: RESET CONDITION FOR SPECIAL REGISTERS

	STATUS Addr: 03h	PCL Addr: 02h
Power on reset	0001 1xxx	1111 1111
$\overline{\text{MCLR}}$ reset during normal operation	000u uuuu	1111 1111
$\overline{\text{MCLR}}$ reset during SLEEP	0001 0uuu	1111 1111
WDT reset during SLEEP	0000 0uuu	1111 1111
WDT reset normal operation	0000 uuuu	1111 1111
Wake-up from SLEEP on pin change	1001 0uuu	1111 1111

Legend: u = unchanged, x = unknown, - = unimplemented bit, read as ‘0’.

7.3.1 $\overline{\text{MCLR}}$ ENABLE

This configuration bit when unprogrammed (left in the '1' state) enables the external $\overline{\text{MCLR}}$ function. When programmed, the $\overline{\text{MCLR}}$ function is tied to the internal VDD, and the pin is assigned to be a I/O. See Figure 7-6.

FIGURE 7-6: $\overline{\text{MCLR}}$ SELECT

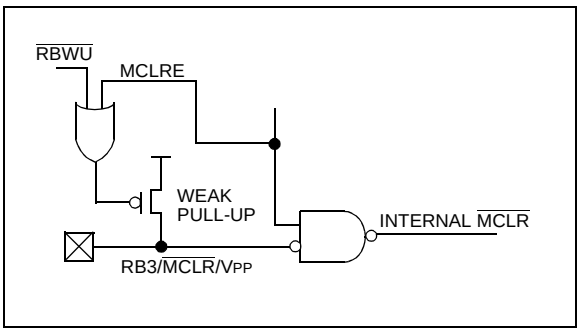

7.4 Power-On Reset (POR)

The PIC16C505 family incorporates on-chip Power-On Reset (POR) circuitry, which provides an internal chip reset for most power-up situations.

The on chip POR circuit holds the chip in reset until VDD has reached a high enough level for proper operation. To take advantage of the internal POR, program the RB3/$\overline{\text{MCLR}}$/VPP pin as $\overline{\text{MCLR}}$ and tie through a resistor to VDD or program the pin as RB3. An internal weak pull-up resistor is implemented using a transistor. Refer to Table 10-1 for the pull-up resistor ranges. This will eliminate external RC components usually needed to create a Power-on Reset. A maximum rise time for VDD is specified. See Electrical Specifications for details.

When the device starts normal operation (exits the reset condition), device operating parameters (voltage, frequency, temperature, ...) must be met to ensure operation. If these conditions are not met, the device must be held in reset until the operating parameters are met.

A simplified block diagram of the on-chip Power-On Reset circuit is shown in Figure 7-7.

The Power-On Reset circuit and the Device Reset Timer (Section 7.5) circuit are closely related. On power-up, the reset latch is set and the DRT is reset. The DRT timer begins counting once it detects $\overline{\text{MCLR}}$ to be high. After the time-out period, which is typically 18 ms, it will reset the reset latch and thus end the on-chip reset signal.

A power-up example where $\overline{\text{MCLR}}$ is held low is shown in Figure 7-8. VDD is allowed to rise and stabilize before bringing $\overline{\text{MCLR}}$ high. The chip will actually come out of reset TDRT msec after $\overline{\text{MCLR}}$ goes high.

In Figure 7-9, the on-chip Power-On Reset feature is being used ($\overline{\text{MCLR}}$ and VDD are tied together or the pin is programmed to be RB3.). The VDD is stable before the start-up timer times out and there is no problem in getting a proper reset. However, Figure 7-10 depicts a problem situation where VDD rises too slowly. The time between when the DRT senses that $\overline{\text{MCLR}}$ is high and when $\overline{\text{MCLR}}$ and VDD actually reach their full value, is too long. In this situation, when the start-up timer times out, VDD has not reached the VDD (min) value and the chip may not function correctly. For such situations, we recommend that external RC circuits be used to achieve longer POR delay times (Figure 7-9).

Note:	When the device starts normal operation (exits the reset condition), device operating parameters (voltage, frequency, temperature, etc.) must be met to ensure operation. If these conditions are not met, the device must be held in reset until the operating conditions are met.

For additional information refer to Application Notes "*Power-Up Considerations*" - AN522 and "*Power-up Trouble Shooting*" - AN607.

© 1999 Microchip Technology Inc.

FIGURE 7-7: SIMPLIFIED BLOCK DIAGRAM OF ON-CHIP RESET CIRCUIT

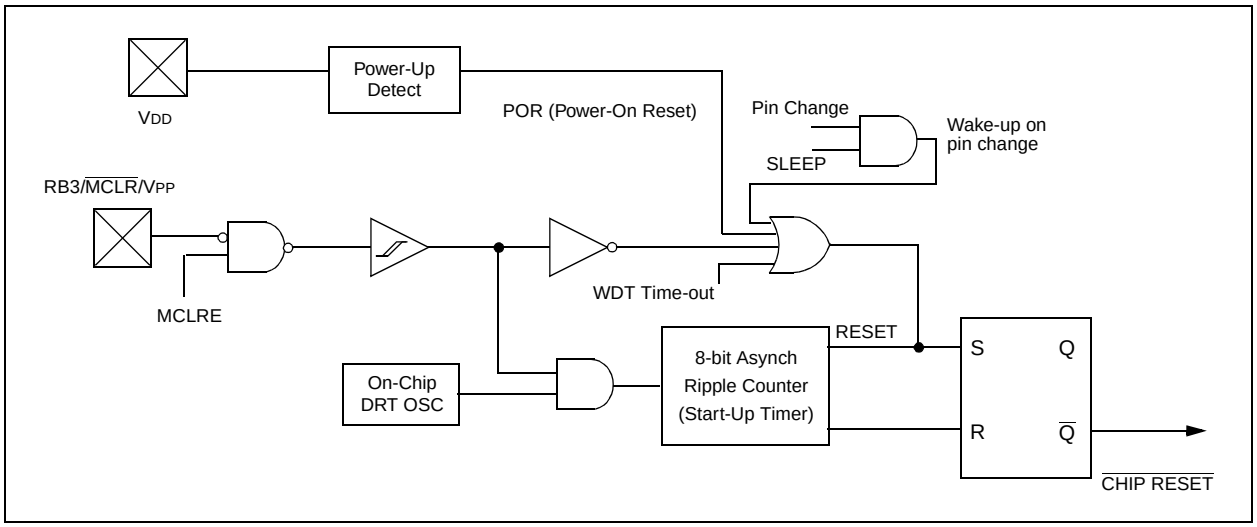

FIGURE 7-8: TIME-OUT SEQUENCE ON POWER-UP ($\overline{MCLR}$ PULLED LOW)

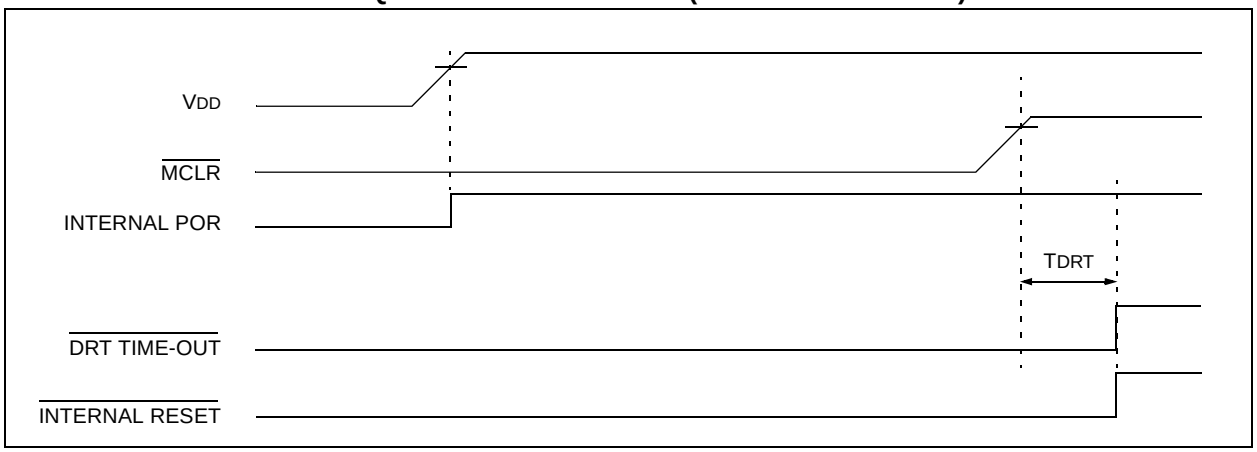

FIGURE 7-9: TIME-OUT SEQUENCE ON POWER-UP ($\overline{MCLR}$ TIED TO VDD): FAST VDD RISE TIME

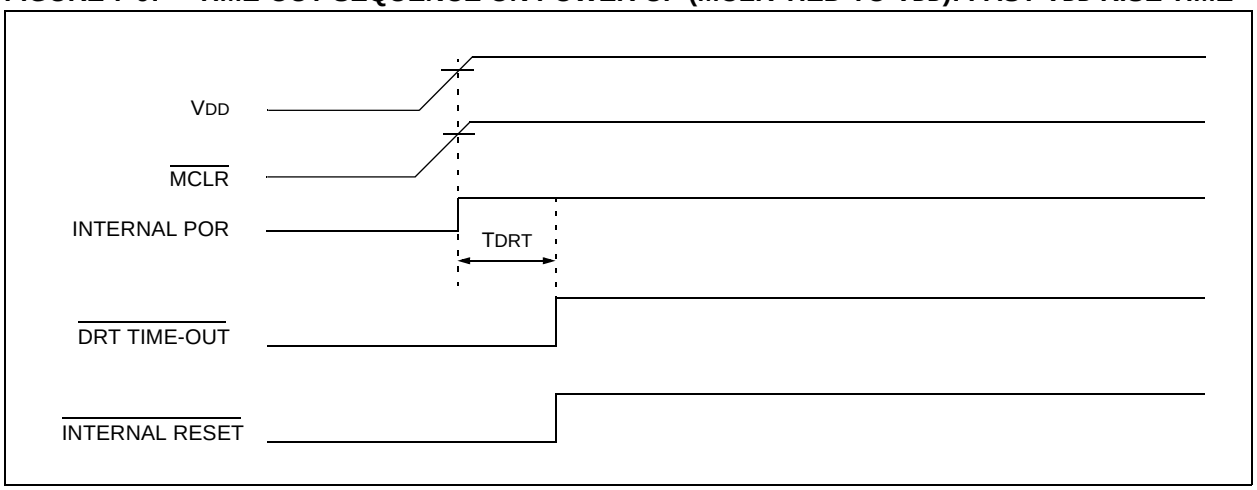

FIGURE 7-10: TIME-OUT SEQUENCE ON POWER-UP ($\overline{MCLR}$ TIED TO V_{DD}): SLOW V_{DD} RISE TIME

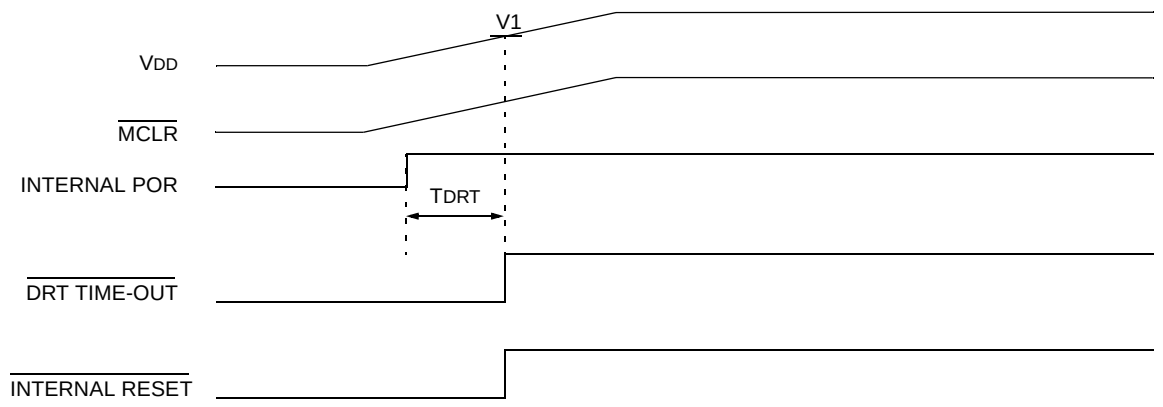

Note: When V_{DD} rises slowly, the T_{DRT} time-out expires long before V_{DD} has reached its final value. In this example, the chip will reset properly if, and only if, V1 ≥ V_{DD} min.

7.5 Device Reset Timer (DRT)

In the PIC16C505, the DRT runs any time the device is powered up. DRT runs from RESET and varies based on oscillator selection and reset type (see Table 7-5).

The DRT operates on an internal RC oscillator. The processor is kept in RESET as long as the DRT is active. The DRT delay allows V_{DD} to rise above V_{DD} min. and for the oscillator to stabilize.

Oscillator circuits based on crystals or ceramic resonators require a certain time after power-up to establish a stable oscillation. The on-chip DRT keeps the device in a RESET condition for approximately 18 ms after $\overline{MCLR}$ has reached a logic high ($V_{IH}\overline{MCLR}$) level. Thus, programming RB3/$\overline{MCLR}$/V_{PP} as $\overline{MCLR}$ and using an external RC network connected to the $\overline{MCLR}$ input is not required in most cases, allowing for savings in cost-sensitive and/or space restricted applications, as well as allowing the use of the RB3/$\overline{MCLR}$/V_{PP} pin as a general purpose input.

The Device Reset time delay will vary from chip to chip due to V_{DD}, temperature and process variation. See AC parameters for details.

The DRT will also be triggered upon a Watchdog Timer time-out. This is particularly important for applications using the WDT to wake from SLEEP mode automatically.

Reset sources are POR, $\overline{MCLR}$, WDT time-out and Wake-up on pin change. (See Section 7.9.2, Notes 1, 2, and 3, page 37.)

7.6 Watchdog Timer (WDT)

The Watchdog Timer (WDT) is a free running on-chip RC oscillator, which does not require any external components. This RC oscillator is separate from the external RC oscillator of the RB5/OSC1/CLKIN pin and the internal 4 MHz oscillator. That means that the WDT will run even if the main processor clock has been stopped, for example, by execution of a SLEEP instruction. During normal operation or SLEEP, a WDT reset or wake-up reset generates a device RESET.

The $\overline{TO}$ bit (STATUS<4>) will be cleared upon a Watchdog Timer reset.

The WDT can be permanently disabled by programming the configuration bit WDTE as a ’0’ (Section 7.1). Refer to the PIC16C505 Programming Specifications to determine how to access the configuration word.

TABLE 7-5: DRT (DEVICE RESET TIMER PERIOD)

Oscillator Configuration	POR Reset	Subsequent Resets
IntRC & ExtRC	18 ms (typical)	300 µs (typical)
HS, XT & LP	18 ms (typical)	18 ms (typical)

© 1999 Microchip Technology Inc.

7.6.1 WDT PERIOD

The WDT has a nominal time-out period of 18 ms, (with no prescaler). If a longer time-out period is desired, a prescaler with a division ratio of up to 1:128 can be assigned to the WDT (under software control) by writing to the OPTION register. Thus, a time-out period of a nominal 2.3 seconds can be realized. These periods vary with temperature, V_{DD} and part-to-part process variations (see DC specs).

Under worst case conditions (V_{DD} = Min., Temperature = Max., max. WDT prescaler), it may take several seconds before a WDT time-out occurs.

7.6.2 WDT PROGRAMMING CONSIDERATIONS

The `CLRWDT` instruction clears the WDT and the postscaler, if assigned to the WDT, and prevents it from timing out and generating a device RESET.

The `SLEEP` instruction resets the WDT and the postscaler, if assigned to the WDT. This gives the maximum SLEEP time before a WDT wake-up reset.

FIGURE 7-11: WATCHDOG TIMER BLOCK DIAGRAM

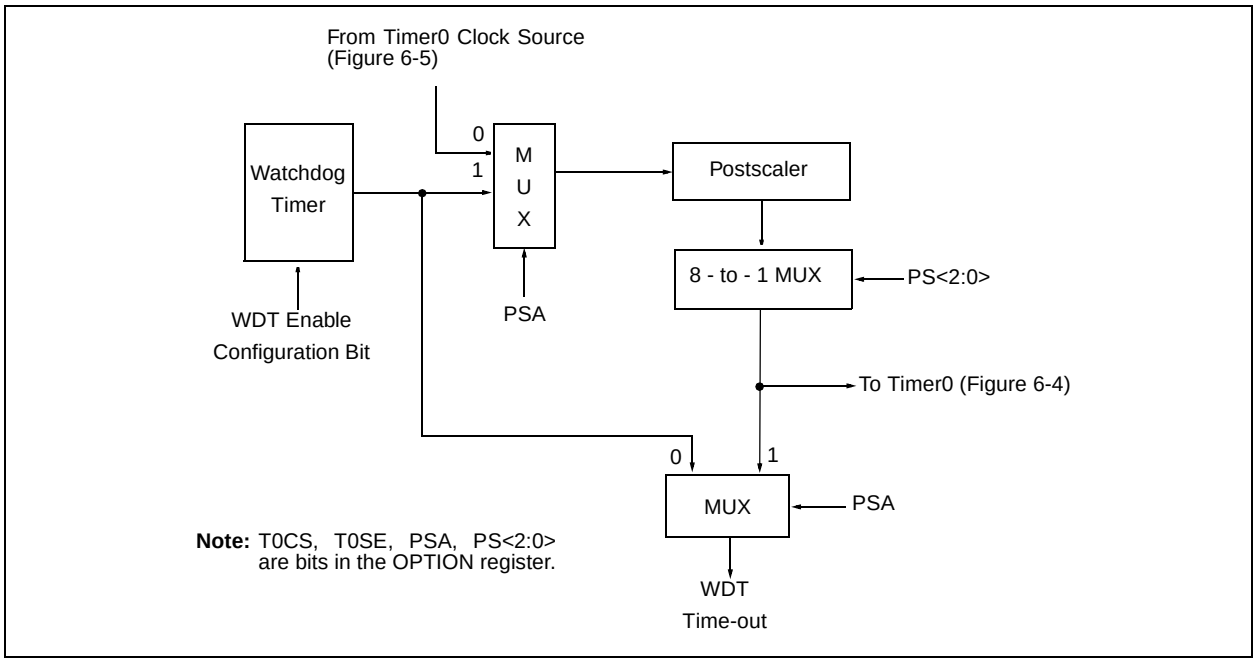

TABLE 7-6: SUMMARY OF REGISTERS ASSOCIATED WITH THE WATCHDOG TIMER

Address	Name	Bit 7	Bit 6	Bit 5	Bit 4	Bit 3	Bit 2	Bit 1	Bit 0	Value on Power-On Reset	Value on All Other Resets
N/A	OPTION	$\overline{RBWU}$	$\overline{RBPU}$	T0CS	T0SE	PSA	PS2	PS1	PS0	1111 1111	1111 1111

Legend: Shaded boxes = Not used by Watchdog Timer, — = unimplemented, read as '0', u = unchanged.

7.7 Time-Out Sequence, Power Down, and Wake-up from SLEEP Status Bits ($\overline{TO}$/$\overline{PD}$/RBWUF)

The $\overline{TO}$, $\overline{PD}$, and RBWUF bits in the STATUS register can be tested to determine if a RESET condition has been caused by a power-up condition, a $\overline{MCLR}$ or Watchdog Timer (WDT) reset.

TABLE 7-7: $\overline{TO}$/$\overline{PD}$/RBWUF STATUS AFTER RESET

RBWUF	$\overline{TO}$	$\overline{PD}$	RESET caused by
0	0	0	WDT wake-up from SLEEP
0	0	u	WDT time-out (not from SLEEP)
0	1	0	$\overline{MCLR}$ wake-up from SLEEP
0	1	1	Power-up
0	u	u	$\overline{MCLR}$ not during SLEEP
1	1	0	Wake-up from SLEEP on pin change

Legend: u = unchanged

Note 1: The $\overline{TO}$, $\overline{PD}$, and RBWUF bits maintain their status (u) until a reset occurs. A low-pulse on the $\overline{MCLR}$ input does not change the $\overline{TO}$, $\overline{PD}$, and RBWUF status bits.

7.8 Reset on Brown-Out

A brown-out is a condition where device power (V_{DD}) dips below its minimum value, but not to zero, and then recovers. The device should be reset in the event of a brown-out.

To reset PIC16C505 devices when a brown-out occurs, external brown-out protection circuits may be built, as shown in Figure 7-12 and Figure 7-13.

FIGURE 7-12: BROWN-OUT PROTECTION CIRCUIT 1

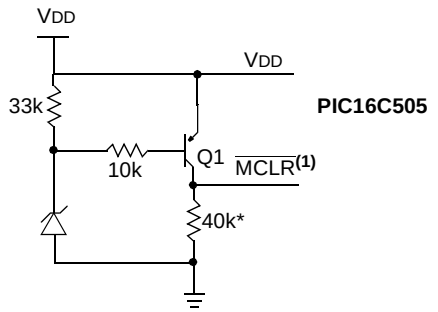

This circuit will activate reset when V_{DD} goes below Vz + 0.7V (where Vz = Zener voltage).

Note 1: Pin must be confirmed as $\overline{MCLR}$.

FIGURE 7-13: BROWN-OUT PROTECTION CIRCUIT 2

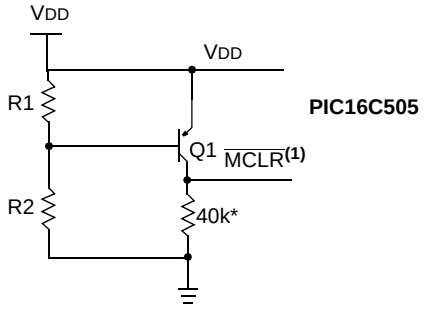

This brown-out circuit is less expensive, although less accurate. Transistor Q1 turns off when V_{DD} is below a certain level such that:

$$V_{DD} \bullet \frac{R1}{R1 + R2} = 0.7V$$

Note 1: Pin must be confirmed as $\overline{MCLR}$.

FIGURE 7-14: BROWN-OUT PROTECTION CIRCUIT 3

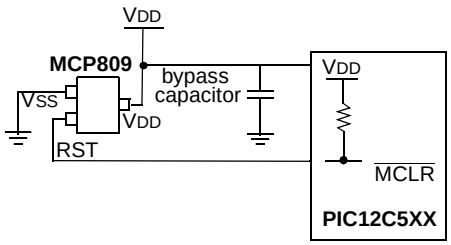

This brown-out protection circuit employs Microchip Technology's MCP809 microcontroller supervisor. There are 7 different trip point selections to accommodate 5V to 3V systems.

© 1999 Microchip Technology Inc.

7.9 Power-Down Mode (SLEEP)

A device may be powered down (SLEEP) and later powered up (Wake-up from SLEEP).

7.9.1 SLEEP

The Power-Down mode is entered by executing a SLEEP instruction.

If enabled, the Watchdog Timer will be cleared but keeps running, the $\overline{TO}$ bit (STATUS<4>) is set, the $\overline{PD}$ bit (STATUS<3>) is cleared and the oscillator driver is turned off. The I/O ports maintain the status they had before the SLEEP instruction was executed (driving high, driving low or hi-impedance).

It should be noted that a RESET generated by a WDT time-out does not drive the $\overline{MCLR}$ pin low.

For lowest current consumption while powered down, the T0CKI input should be at V_{DD} or V_{SS} and the RB3/$\overline{MCLR}$/V_{PP} pin must be at a logic high level (V_{IHMC}) if $\overline{MCLR}$ is enabled.

7.9.2 WAKE-UP FROM SLEEP

The device can wake-up from SLEEP through one of the following events:

1. An external reset input on RB3/$\overline{MCLR}$/V_{PP} pin, when configured as $\overline{MCLR}$.
2. A Watchdog Timer time-out reset (if WDT was enabled).
3. A change on input pin RB0, RB1, RB3 or RB4 when wake-up on change is enabled.

These events cause a device reset. The $\overline{TO}$, $\overline{PD}$, and RBWUF bits can be used to determine the cause of device reset. The $\overline{TO}$ bit is cleared if a WDT time-out occurred (and caused wake-up). The $\overline{PD}$ bit, which is set on power-up, is cleared when SLEEP is invoked. The RBWUF bit indicates a change in state while in SLEEP at pins RB0, RB1, RB3 or RB4 (since the last file or bit operation on RB port).

Caution:	Right before entering SLEEP, read the input pins. When in SLEEP, wake up occurs when the values at the pins change from the state they were in at the last reading. If a wake-up on change occurs and the pins are not read before reentering SLEEP, a wake-up will occur immediately even if no pins change while in SLEEP mode.

The WDT is cleared when the device wakes from sleep, regardless of the wake-up source.

7.10 Program Verification/Code Protection

If the code protection bit has not been programmed, the on-chip program memory can be read out for verification purposes.

The first 64 locations and the last location (OSCCAL) can be read, regardless of the code protection bit setting.

7.11 ID Locations

Four memory locations are designated as ID locations where the user can store checksum or other code-identification numbers. These locations are not accessible during normal execution, but are readable and writable during program/verify.

Use only the lower 4 bits of the ID locations and always program the upper 8 bits as ’0’s.

7.12 In-Circuit Serial Programming

The PIC16C505 microcontrollers can be serially programmed while in the end application circuit. This is simply done with two lines for clock and data, and three other lines for power, ground, and the programming voltage. This allows customers to manufacture boards with unprogrammed devices, and then program the microcontroller just before shipping the product. This also allows the most recent firmware or a custom firmware to be programmed.

The device is placed into a program/verify mode by holding the RB1 and RB0 pins low while raising the $\overline{MCLR}$ (V_{PP}) pin from V_{IL} to V_{IHH} (see programming specification). RB1 becomes the programming clock and RB0 becomes the programming data. Both RB1 and RB0 are Schmitt Trigger inputs in this mode.

After reset, a 6-bit command is then supplied to the device. Depending on the command, 14 bits of program data are then supplied to or from the device, depending if the command was a load or a read. For complete details of serial programming, please refer to the PIC16C505 Programming Specifications.

A typical in-circuit serial programming connection is shown in Figure 7-15.

FIGURE 7-15: TYPICAL IN-CIRCUIT SERIAL PROGRAMMING CONNECTION

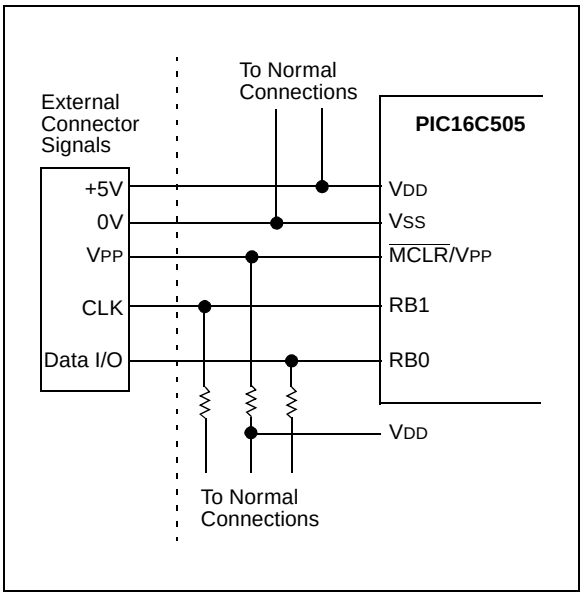

© 1999 Microchip Technology Inc.

8.0 INSTRUCTION SET SUMMARY

Each PIC16C505 instruction is a 12-bit word divided into an OPCODE, which specifies the instruction type, and one or more operands which further specify the operation of the instruction. The PIC16C505 instruction set summary in Table 8-2 groups the instructions into byte-oriented, bit-oriented, and literal and control operations. Table 8-1 shows the opcode field descriptions.

For **byte-oriented** instructions, 'f' represents a file register designator and 'd' represents a destination designator. The file register designator is used to specify which one of the 32 file registers is to be used by the instruction.

The destination designator specifies where the result of the operation is to be placed. If 'd' is '0', the result is placed in the W register. If 'd' is '1', the result is placed in the file register specified in the instruction.

For **bit-oriented** instructions, 'b' represents a bit field designator which selects the number of the bit affected by the operation, while 'f' represents the number of the file in which the bit is located.

For **literal and control** operations, 'k' represents an 8 or 9-bit constant or literal value.

TABLE 8-1: OPCODE FIELD DESCRIPTIONS

Field	Description
f	Register file address (0x00 to 0x7F)
W	Working register (accumulator)
b	Bit address within an 8-bit file register
k	Literal field, constant data or label
x	Don't care location (= 0 or 1) The assembler will generate code with x = 0. It is the recommended form of use for compatibility with all Microchip software tools.
d	Destination select; d = 0 (store result in W) d = 1 (store result in file register 'f') Default is d = 1
label	Label name
TOS	Top of Stack
PC	Program Counter
WDT	Watchdog Timer Counter
$\overline{TO}$	Time-Out bit
$\overline{PD}$	Power-Down bit
dest	Destination, either the W register or the specified register file location
[ ]	Options
( )	Contents
→	Assigned to
< >	Register bit field
∈	In the set of
italics	User defined term (font is courier)

All instructions are executed within a single instruction cycle, unless a conditional test is true or the program counter is changed as a result of an instruction. In this case, the execution takes two instruction cycles. One instruction cycle consists of four oscillator periods. Thus, for an oscillator frequency of 4 MHz, the normal instruction execution time is 1 µs. If a conditional test is true or the program counter is changed as a result of an instruction, the instruction execution time is 2 µs.

Figure 8-1 shows the three general formats that the instructions can have. All examples in the figure use the following format to represent a hexadecimal number:

0xhhh

where 'h' signifies a hexadecimal digit.

FIGURE 8-1: GENERAL FORMAT FOR INSTRUCTIONS

Byte-oriented file register operations

11 – 6	5	4 – 0
OPCODE	d	f (FILE #)

d = 0 for destination W
d = 1 for destination f
f = 5-bit file register address

Bit-oriented file register operations

11 – 8	7 – 5	4 – 0
OPCODE	b (BIT #)	f (FILE #)

b = 3-bit bit address
f = 5-bit file register address

Literal and control operations (except GOTO)

11 – 8	7 – 0
OPCODE	k (literal)

k = 8-bit immediate value

Literal and control operations - GOTO instruction

11 – 9	8 – 0
OPCODE	k (literal)

k = 9-bit immediate value

TABLE 8-2: INSTRUCTION SET SUMMARY

Mnemonic, Operands		Description	Cycles	12-Bit Opcode MSb		LSb	Status Affected	Notes
ADDWF	**f,d**	Add W and f	1	0001	11df	ffff	C,DC,Z	1,2,4
ANDWF	**f,d**	AND W with f	1	0001	01df	ffff	Z	2,4
CLRF	**f**	Clear f	1	0000	011f	ffff	Z	4
CLRW	**–**	Clear W	1	0000	0100	0000	Z	
COMF	**f, d**	Complement f	1	0010	01df	ffff	Z	
DECF	**f, d**	Decrement f	1	0000	11df	ffff	Z	2,4
DECFSZ	**f, d**	Decrement f, Skip if 0	1(2)	0010	11df	ffff	None	2,4
INCF	**f, d**	Increment f	1	0010	10df	ffff	Z	2,4
INCFSZ	**f, d**	Increment f, Skip if 0	1(2)	0011	11df	ffff	None	2,4
IORWF	**f, d**	Inclusive OR W with f	1	0001	00df	ffff	Z	2,4
MOVF	**f, d**	Move f	1	0010	00df	ffff	Z	2,4
MOVWF	**f**	Move W to f	1	0000	001f	ffff	None	1,4
NOP	**–**	No Operation	1	0000	0000	0000	None	
RLF	**f, d**	Rotate left f through Carry	1	0011	01df	ffff	C	2,4
RRF	**f, d**	Rotate right f through Carry	1	0011	00df	ffff	C	2,4
SUBWF	**f, d**	Subtract W from f	1	0000	10df	ffff	C,DC,Z	1,2,4
SWAPF	**f, d**	Swap f	1	0011	10df	ffff	None	2,4
XORWF	**f, d**	Exclusive OR W with f	1	0001	10df	ffff	Z	2,4
BIT-ORIENTED FILE REGISTER OPERATIONS								
BCF	**f, b**	Bit Clear f	1	0100	bbbf	ffff	None	2,4
BSF	**f, b**	Bit Set f	1	0101	bbbf	ffff	None	2,4
BTFSC	**f, b**	Bit Test f, Skip if Clear	1 (2)	0110	bbbf	ffff	None	
BTFSS	**f, b**	Bit Test f, Skip if Set	1 (2)	0111	bbbf	ffff	None	
LITERAL AND CONTROL OPERATIONS								
ANDLW	**k**	AND literal with W	1	1110	kkkk	kkkk	Z	
CALL	**k**	Call subroutine	2	1001	kkkk	kkkk	None	1
CLRWDT	**k**	Clear Watchdog Timer	1	0000	0000	0100	$\overline{TO}$, $\overline{PD}$	
GOTO	**k**	Unconditional branch	2	101k	kkkk	kkkk	None	
IORLW	**k**	Inclusive OR Literal with W	1	1101	kkkk	kkkk	Z	
MOVLW	**k**	Move Literal to W	1	1100	kkkk	kkkk	None	
OPTION	**–**	Load OPTION register	1	0000	0000	0010	None	
RETLW	**k**	Return, place Literal in W	2	1000	kkkk	kkkk	None	
SLEEP	**–**	Go into standby mode	1	0000	0000	0011	$\overline{TO}$, $\overline{PD}$	
TRIS	**f**	Load TRIS register	1	0000	0000	0fff	None	3
XORLW	**k**	Exclusive OR Literal to W	1	1111	kkkk	kkkk	Z	

Note 1: The 9th bit of the program counter will be forced to a ’0’ by any instruction that writes to the PC except for `GOTO`. (Section 4.6)

2: When an I/O register is modified as a function of itself (e.g. `MOVF PORTB, 1`), the value used will be that value present on the pins themselves. For example, if the data latch is ’1’ for a pin configured as input and is driven low by an external device, the data will be written back with a ’0’.

3: The instruction `TRIS f`, where f = 6 causes the contents of the W register to be written to the tristate latches of PORTB. A ’1’ forces the pin to a hi-impedance state and disables the output buffers.

4: If this instruction is executed on the TMR0 register (and, where applicable, d = 1), the prescaler will be cleared (if assigned to TMR0).

© 1999 Microchip Technology Inc.

ADDWF **Add W and f**

Syntax: [*label*] ADDWF f,d

Operands: $0 \le f \le 31$
$d \in [0,1]$

Operation: (W) + (f) → (dest)

Status Affected: C, DC, Z

Encoding:

0001	11df	ffff

Description: Add the contents of the W register and register 'f'. If 'd' is 0, the result is stored in the W register. If 'd' is '1', the result is stored back in register 'f'.

Words: 1

Cycles: 1

Example: `ADDWF FSR, 0`

Before Instruction
W = 0x17
FSR = 0xC2

After Instruction
W = 0xD9
FSR = 0xC2

ANDLW **And literal with W**

Syntax: [*label*] ANDLW k

Operands: $0 \le k \le 255$

Operation: (W).AND. (k) → (W)

Status Affected: Z

Encoding:

1110	kkkk	kkkk

Description: The contents of the W register are AND'ed with the eight-bit literal 'k'. The result is placed in the W register.

Words: 1

Cycles: 1

Example: `ANDLW 0x5F`

Before Instruction
W = 0xA3

After Instruction
W = 0x03

ANDWF **AND W with f**

Syntax: [*label*] ANDWF f,d

Operands: $0 \le f \le 31$
$d \in [0,1]$

Operation: (W) .AND. (f) → (dest)

Status Affected: Z

Encoding:

0001	01df	ffff

Description: The contents of the W register are AND'ed with register 'f'. If 'd' is 0, the result is stored in the W register. If 'd' is '1', the result is stored back in register 'f'.

Words: 1

Cycles: 1

Example: `ANDWF FSR, 1`

Before Instruction
W = 0x17
FSR = 0xC2

After Instruction
W = 0x17
FSR = 0x02

BCF **Bit Clear f**

Syntax: [*label*] BCF f,b

Operands: $0 \le f \le 31$
$0 \le b \le 7$

Operation: 0 → (f<b>)

Status Affected: None

Encoding:

0100	bbbf	ffff

Description: Bit 'b' in register 'f' is cleared.

Words: 1

Cycles: 1

Example: `BCF FLAG_REG, 7`

Before Instruction
FLAG_REG = 0xC7

After Instruction
FLAG_REG = 0x47

© 1999 Microchip Technology Inc.

BSF	**Bit Set f**
Syntax:	[*label*] BSF f,b
Operands:	$0 \le f \le 31$ $0 \le b \le 7$
Operation:	$1 \rightarrow$ (f<b>)
Status Affected:	None
Encoding:	`0101` `bbbf` `ffff`
Description:	Bit 'b' in register 'f' is set.
Words:	1
Cycles:	1
Example:	`BSF FLAG_REG, 7`

Before Instruction
FLAG_REG = 0x0A

After Instruction
FLAG_REG = 0x8A

BTFSC	**Bit Test f, Skip if Clear**
Syntax:	[*label*] BTFSC f,b
Operands:	$0 \le f \le 31$ $0 \le b \le 7$
Operation:	skip if (f<b>) = 0
Status Affected:	None
Encoding:	`0110` `bbbf` `ffff`
Description:	If bit 'b' in register 'f' is 0, then the next instruction is skipped. If bit 'b' is 0, then the next instruction fetched during the current instruction execution is discarded, and a `NOP` is executed instead, making this a 2 cycle instruction.
Words:	1
Cycles:	1(2)

Example:

```
HERE    BTFSC   FLAG,1
FALSE   GOTO    PROCESS_CODE
TRUE    •
        •
        •
```

Before Instruction
PC = address (HERE)

After Instruction
if FLAG<1> = 0,
PC = address (TRUE);
if FLAG<1> = 1,
PC = address(FALSE)

BTFSS	**Bit Test f, Skip if Set**
Syntax:	[*label*] BTFSS f,b
Operands:	$0 \le f \le 31$ $0 \le b < 7$
Operation:	skip if (f<b>) = 1
Status Affected:	None
Encoding:	`0111` `bbbf` `ffff`
Description:	If bit 'b' in register 'f' is '1', then the next instruction is skipped. If bit 'b' is '1', then the next instruction fetched during the current instruction execution, is discarded and a `NOP` is executed instead, making this a 2 cycle instruction.
Words:	1
Cycles:	1(2)

Example:

```
HERE    BTFSS   FLAG,1
FALSE   GOTO    PROCESS_CODE
TRUE    •
        •
        •
```

Before Instruction
PC = address (HERE)

After Instruction
If FLAG<1> = 0,
PC = address (FALSE);
if FLAG<1> = 1,
PC = address (TRUE)

© 1999 Microchip Technology Inc.

CALL — Subroutine Call

Syntax:	[*label*] CALL k
Operands:	$0 \le k \le 255$
Operation:	(PC) + 1 → Top of Stack; k → PC<7:0>; (STATUS<6:5>) → PC<10:9>; 0 → PC<8>
Status Affected:	None
Encoding:	1001 | kkkk | kkkk
Description:	Subroutine call. First, return address (PC+1) is pushed onto the stack. The eight bit immediate address is loaded into PC bits <7:0>. The upper bits PC<10:9> are loaded from STATUS<6:5>, PC<8> is cleared. CALL is a two cycle instruction.
Words:	1
Cycles:	2
Example:	HERE CALL THERE

Before Instruction
PC = address (HERE)

After Instruction
PC = address (THERE)
TOS = address (HERE + 1)

CLRF — Clear f

Syntax:	[*label*] CLRF f
Operands:	$0 \le f \le 31$
Operation:	00h → (f); 1 → Z
Status Affected:	Z
Encoding:	0000 | 011f | ffff
Description:	The contents of register 'f' are cleared and the Z bit is set.
Words:	1
Cycles:	1
Example:	CLRF FLAG_REG

Before Instruction
FLAG_REG = 0x5A

After Instruction
FLAG_REG = 0x00
Z = 1

CLRW — Clear W

Syntax:	[*label*] CLRW
Operands:	None
Operation:	00h → (W); 1 → Z
Status Affected:	Z
Encoding:	0000 | 0100 | 0000
Description:	The W register is cleared. Zero bit (Z) is set.
Words:	1
Cycles:	1
Example:	CLRW

Before Instruction
W = 0x5A

After Instruction
W = 0x00
Z = 1

CLRWDT — Clear Watchdog Timer

Syntax:	[*label*] CLRWDT
Operands:	None
Operation:	00h → WDT; 0 → WDT prescaler (if assigned); 1 → $\overline{TO}$; 1 → $\overline{PD}$
Status Affected:	$\overline{TO}$, $\overline{PD}$
Encoding:	0000 | 0000 | 0100
Description:	The CLRWDT instruction resets the WDT. It also resets the prescaler, if the prescaler is assigned to the WDT and not Timer0. Status bits $\overline{TO}$ and $\overline{PD}$ are set.
Words:	1
Cycles:	1
Example:	CLRWDT

Before Instruction
WDT counter = ?

After Instruction
WDT counter = 0x00
WDT prescale = 0
$\overline{TO}$ = 1
$\overline{PD}$ = 1

© 1999 Microchip Technology Inc.

COMF — **Complement f**

Syntax: [*label*] COMF f,d

Operands: $0 \le f \le 31$
$d \in [0,1]$

Operation: $(\bar{f}) \rightarrow$ (dest)

Status Affected: Z

Encoding:

0010	01df	ffff

Description: The contents of register 'f' are complemented. If 'd' is 0, the result is stored in the W register. If 'd' is 1, the result is stored back in register 'f'.

Words: 1

Cycles: 1

Example: `COMF REG1,0`

Before Instruction
REG1 = 0x13

After Instruction
REG1 = 0x13
W = 0xEC

DECF — **Decrement f**

Syntax: [*label*] DECF f,d

Operands: $0 \le f \le 31$
$d \in [0,1]$

Operation: (f) – 1 → (dest)

Status Affected: Z

Encoding:

0000	11df	ffff

Description: Decrement register 'f'. If 'd' is 0, the result is stored in the W register. If 'd' is 1, the result is stored back in register 'f'.

Words: 1

Cycles: 1

Example: `DECF CNT, 1`

Before Instruction
CNT = 0x01
Z = 0

After Instruction
CNT = 0x00
Z = 1

DECFSZ — **Decrement f, Skip if 0**

Syntax: [*label*] DECFSZ f,d

Operands: $0 \le f \le 31$
$d \in [0,1]$

Operation: (f) – 1 → d; skip if result = 0

Status Affected: None

Encoding:

0010	11df	ffff

Description: The contents of register 'f' are decremented. If 'd' is 0, the result is placed in the W register. If 'd' is 1, the result is placed back in register 'f'.

If the result is 0, the next instruction, which is already fetched, is discarded and a `NOP` is executed instead making it a two cycle instruction.

Words: 1

Cycles: 1(2)

Example:

```
HERE      DECFSZ   CNT, 1
          GOTO     LOOP
CONTINUE  •
          •
          •
```

Before Instruction
PC = address (HERE)

After Instruction
CNT = CNT - 1;
if CNT = 0,
PC = address (CONTINUE);
if CNT ≠ 0,
PC = address (HERE+1)

GOTO — **Unconditional Branch**

Syntax: [*label*] GOTO k

Operands: $0 \le k \le 511$

Operation: k → PC<8:0>;
STATUS<6:5> → PC<10:9>

Status Affected: None

Encoding:

101k	kkkk	kkkk

Description: `GOTO` is an unconditional branch. The 9-bit immediate value is loaded into PC bits <8:0>. The upper bits of PC are loaded from STATUS<6:5>. `GOTO` is a two cycle instruction.

Words: 1

Cycles: 2

Example: `GOTO THERE`

After Instruction
PC = address (THERE)

© 1999 Microchip Technology Inc.

INCF	Increment f
Syntax:	[*label*] INCF f,d
Operands:	$0 \le f \le 31$ $d \in [0,1]$
Operation:	(f) + 1 → (dest)
Status Affected:	Z
Encoding:	`0010` `10df` `ffff`
Description:	The contents of register 'f' are incremented. If 'd' is 0, the result is placed in the W register. If 'd' is 1, the result is placed back in register 'f'.
Words:	1
Cycles:	1
Example:	`INCF CNT, 1`

Before Instruction
CNT = 0xFF
Z = 0

After Instruction
CNT = 0x00
Z = 1

INCFSZ	Increment f, Skip if 0
Syntax:	[*label*] INCFSZ f,d
Operands:	$0 \le f \le 31$ $d \in [0,1]$
Operation:	(f) + 1 → (dest), skip if result = 0
Status Affected:	None
Encoding:	`0011` `11df` `ffff`
Description:	The contents of register 'f' are incremented. If 'd' is 0, the result is placed in the W register. If 'd' is 1, the result is placed back in register 'f'. If the result is 0, then the next instruction, which is already fetched, is discarded and a `NOP` is executed instead making it a two cycle instruction.
Words:	1
Cycles:	1(2)

Example:

```
HERE     INCFSZ    CNT,  1
         GOTO      LOOP
CONTINUE •
         •
         •
```

Before Instruction
PC = address (HERE)

After Instruction
CNT = CNT + 1;
if CNT = 0,
PC = address (CONTINUE);
if CNT ≠ 0,
PC = address (HERE +1)

IORLW — Inclusive OR literal with W

Syntax:	[*label*] IORLW k
Operands:	$0 \le k \le 255$
Operation:	(W) .OR. (k) → (W)
Status Affected:	Z
Encoding:	`1101` | `kkkk` | `kkkk`
Description:	The contents of the W register are OR'ed with the eight bit literal 'k'. The result is placed in the W register.
Words:	1
Cycles:	1
Example:	`IORLW 0x35`

Before Instruction
W = 0x9A

After Instruction
W = 0xBF
Z = 0

IORWF — Inclusive OR W with f

Syntax:	[*label*] IORWF f,d
Operands:	$0 \le f \le 31$ $d \in [0,1]$
Operation:	(W).OR. (f) → (dest)
Status Affected:	Z
Encoding:	`0001` | `00df` | `ffff`
Description:	Inclusive OR the W register with register 'f'. If 'd' is 0, the result is placed in the W register. If 'd' is 1, the result is placed back in register 'f'.
Words:	1
Cycles:	1
Example:	`IORWF RESULT, 0`

Before Instruction
RESULT = 0x13
W = 0x91

After Instruction
RESULT = 0x13
W = 0x93
Z = 0

MOVF — Move f

Syntax:	[*label*] MOVF f,d
Operands:	$0 \le f \le 31$ $d \in [0,1]$
Operation:	(f) → (dest)
Status Affected:	Z
Encoding:	`0010` | `00df` | `ffff`
Description:	The contents of register 'f' are moved to destination 'd'. If 'd' is 0, destination is the W register. If 'd' is 1, the destination is file register 'f'. 'd' = 1 is useful as a test of a file register since status flag Z is affected.
Words:	1
Cycles:	1
Example:	`MOVF FSR, 0`

After Instruction
W = value in FSR register

MOVLW — Move Literal to W

Syntax:	[*label*] MOVLW k
Operands:	$0 \le k \le 255$
Operation:	k → (W)
Status Affected:	None
Encoding:	`1100` | `kkkk` | `kkkk`
Description:	The eight bit literal 'k' is loaded into the W register. The don't cares will assembled as 0s.
Words:	1
Cycles:	1
Example:	`MOVLW 0x5A`

After Instruction
W = 0x5A

© 1999 Microchip Technology Inc.

MOVWF **Move W to f**

Syntax: [*label*] MOVWF f

Operands: $0 \le f \le 31$

Operation: (W) → (f)

Status Affected: None

Encoding:

0000	001f	ffff

Description: Move data from the W register to register 'f'.

Words: 1

Cycles: 1

Example: `MOVWF TEMP_REG`

Before Instruction
TEMP_REG = 0xFF
W = 0x4F

After Instruction
TEMP_REG = 0x4F
W = 0x4F

NOP **No Operation**

Syntax: [*label*] NOP

Operands: None

Operation: No operation

Status Affected: None

Encoding:

0000	0000	0000

Description: No operation.

Words: 1

Cycles: 1

Example: `NOP`

OPTION **Load OPTION Register**

Syntax: [*label*] OPTION

Operands: None

Operation: (W) → OPTION

Status Affected: None

Encoding:

0000	0000	0010

Description: The content of the W register is loaded into the OPTION register.

Words: 1

Cycles: 1

Example `OPTION`

Before Instruction
W = 0x07

After Instruction
OPTION = 0x07

RETLW **Return with Literal in W**

Syntax: [*label*] RETLW k

Operands: $0 \le k \le 255$

Operation: k → (W);
TOS → PC

Status Affected: None

Encoding:

1000	kkkk	kkkk

Description: The W register is loaded with the eight bit literal 'k'. The program counter is loaded from the top of the stack (the return address). This is a two cycle instruction.

Words: 1

Cycles: 2

Example:

```
CALL TABLE ;W contains
           ;table offset
           ;value.
•          ;W now has table
•          ;value.
•
ADDWF PC   ;W = offset
RETLW k1   ;Begin table
RETLW k2   ;
•
•
•
RETLW kn   ; End of table
```

TABLE

Before Instruction
W = 0x07

After Instruction
W = value of k8

RLF	Rotate Left f through Carry
Syntax:	[*label*] RLF f,d
Operands:	$0 \le f \le 31$ $d \in [0,1]$
Operation:	See description below
Status Affected:	C
Encoding:	0011 | 01df | ffff
Description:	The contents of register 'f' are rotated one bit to the left through the Carry Flag. If 'd' is 0, the result is placed in the W register. If 'd' is 1, the result is stored back in register 'f'.

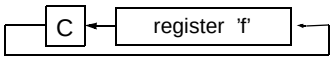

Words:	1
Cycles:	1
Example:	`RLF REG1,0`

Before Instruction
```
REG1   =   1110 0110
C      =   0
```
After Instruction
```
REG1   =   1110 0110
W      =   1100 1100
C      =   1
```

RRF	Rotate Right f through Carry
Syntax:	[*label*] RRF f,d
Operands:	$0 \le f \le 31$ $d \in [0,1]$
Operation:	See description below
Status Affected:	C
Encoding:	0011 | 00df | ffff
Description:	The contents of register 'f' are rotated one bit to the right through the Carry Flag. If 'd' is 0, the result is placed in the W register. If 'd' is 1, the result is placed back in register 'f'.

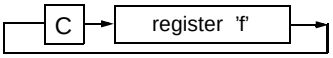

Words:	1
Cycles:	1
Example:	`RRF REG1,0`

Before Instruction
```
REG1   =   1110 0110
C      =   0
```
After Instruction
```
REG1   =   1110 0110
W      =   0111 0011
C      =   0
```


© 1999 Microchip Technology Inc.

SLEEP	Enter SLEEP Mode
Syntax:	[*label*] SLEEP
Operands:	None
Operation:	00h → WDT; 0 → WDT prescaler; 1 → $\overline{TO}$; 0 → $\overline{PD}$
Status Affected:	$\overline{TO}$, $\overline{PD}$, RBWUF
Encoding:	0000 | 0000 | 0011
Description:	Time-out status bit ($\overline{TO}$) is set. The power down status bit ($\overline{PD}$) is cleared. RBWUF is unaffected. The WDT and its prescaler are cleared. The processor is put into SLEEP mode with the oscillator stopped. See section on SLEEP for more details.
Words:	1
Cycles:	1
Example:	`SLEEP`

SUBWF	Subtract W from f
Syntax:	[*label*] SUBWF f,d
Operands:	$0 \le f \le 31$ $d \in [0,1]$
Operation:	(f) – (W) → (dest)
Status Affected:	C, DC, Z
Encoding:	0000 | 10df | ffff
Description:	Subtract (2's complement method) the W register from register 'f'. If 'd' is 0, the result is stored in the W register. If 'd' is 1, the result is stored back in register 'f'.
Words:	1
Cycles:	1

Example 1: `SUBWF REG1, 1`

Before Instruction
REG1 = 3
W = 2
C = ?

After Instruction
REG1 = 1
W = 2
C = 1 ; result is positive

Example 2:

Before Instruction
REG1 = 2
W = 2
C = ?

After Instruction
REG1 = 0
W = 2
C = 1 ; result is zero

Example 3:

Before Instruction
REG1 = 1
W = 2
C = ?

After Instruction
REG1 = FF
W = 2
C = 0 ; result is negative

SWAPF — Swap Nibbles in f

Syntax: [*label*] SWAPF f,d

Operands: $0 \le f \le 31$
$d \in [0,1]$

Operation: (f<3:0>) → (dest<7:4>);
(f<7:4>) → (dest<3:0>)

Status Affected: None

Encoding:

0011	10df	ffff

Description: The upper and lower nibbles of register 'f' are exchanged. If 'd' is 0, the result is placed in W register. If 'd' is 1, the result is placed in register 'f'.

Words: 1

Cycles: 1

Example `SWAPF REG1, 0`

Before Instruction
REG1 = 0xA5

After Instruction
REG1 = 0xA5
W = 0X5A

TRIS — Load TRIS Register

Syntax: [*label*] TRIS f

Operands: f = 6

Operation: (W) → TRIS register f

Status Affected: None

Encoding:

0000	0000	0fff

Description: TRIS register 'f' (f = 6 or 7) is loaded with the contents of the W register

Words: 1

Cycles: 1

Example `TRIS PORTB`

Before Instruction
W = 0XA5

After Instruction
TRIS = 0XA5

XORLW — Exclusive OR literal with W

Syntax: [*label*] XORLW k

Operands: $0 \le k \le 255$

Operation: (W) .XOR. k → (W)

Status Affected: Z

Encoding:

1111	kkkk	kkkk

Description: The contents of the W register are XOR'ed with the eight bit literal 'k'. The result is placed in the W register.

Words: 1

Cycles: 1

Example `XORLW 0xAF`

Before Instruction
W = 0xB5

After Instruction
W = 0x1A

XORWF — Exclusive OR W with f

Syntax: [*label*] XORWF f,d

Operands: $0 \le f \le 31$
$d \in [0,1]$

Operation: (W) .XOR. (f) → (dest)

Status Affected: Z

Encoding:

0001	10df	ffff

Description: Exclusive OR the contents of the W register with register 'f'. If 'd' is 0, the result is stored in the W register. If 'd' is 1, the result is stored back in register 'f'.

Words: 1

Cycles: 1

Example `XORWF REG,1`

Before Instruction
REG = 0xAF
W = 0xB5

After Instruction
REG = 0x1A
W = 0xB5

© 1999 Microchip Technology Inc.

9.0 DEVELOPMENT SUPPORT

The PICmicro® microcontrollers are supported with a full range of hardware and software development tools:

- Integrated Development Environment
  - MPLAB™ IDE Software
- Assemblers/Compilers/Linkers
  - MPASM Assembler
  - MPLAB-C17 and MPLAB-C18 C Compilers
  - MPLINK/MPLIB Linker/Librarian
- Simulators
  - MPLAB-SIM Software Simulator
- Emulators
  - MPLAB-ICE Real-Time In-Circuit Emulator
  - PICMASTER®/PICMASTER-CE In-Circuit Emulator
  - ICEPIC™
- In-Circuit Debugger
  - MPLAB-ICD for PIC16F877
- Device Programmers
  - PRO MATE® II Universal Programmer
  - PICSTART® Plus Entry-Level Prototype Programmer
- Low-Cost Demonstration Boards
  - SIMICE
  - PICDEM-1
  - PICDEM-2
  - PICDEM-3
  - PICDEM-17
  - SEEVAL®
  - KEELOQ®

9.1 MPLAB Integrated Development Environment Software

- The MPLAB IDE software brings an ease of software development previously unseen in the 8-bit microcontroller market. MPLAB is a Windows®-based application which contains:
- Multiple functionality
  - editor
  - simulator
  - programmer (sold separately)
  - emulator (sold separately)
- A full featured editor
- A project manager
- Customizable tool bar and key mapping
- A status bar
- On-line help

MPLAB allows you to:

- Edit your source files (either assembly or ‘C’)
- One touch assemble (or compile) and download to PICmicro tools (automatically updates all project information)
- Debug using:
  - source files
  - absolute listing file
  - object code

The ability to use MPLAB with Microchip’s simulator, MPLAB-SIM, allows a consistent platform and the ability to easily switch from the cost-effective simulator to the full featured emulator with minimal retraining.

9.2 MPASM Assembler

MPASM is a full featured universal macro assembler for all PICmicro MCU’s. It can produce absolute code directly in the form of HEX files for device programmers, or it can generate relocatable objects for MPLINK.

MPASM has a command line interface and a Windows shell and can be used as a standalone application on a Windows 3.x or greater system. MPASM generates relocatable object files, Intel standard HEX files, MAP files to detail memory usage and symbol reference, an absolute LST file which contains source lines and generated machine code, and a COD file for MPLAB debugging.

MPASM features include:

- MPASM and MPLINK are integrated into MPLAB projects.
- MPASM allows user defined macros to be created for streamlined assembly.
- MPASM allows conditional assembly for multi purpose source files.
- MPASM directives allow complete control over the assembly process.

9.3 MPLAB-C17 and MPLAB-C18 C Compilers

The MPLAB-C17 and MPLAB-C18 Code Development Systems are complete ANSI ‘C’ compilers and integrated development environments for Microchip’s PIC17CXXX and PIC18CXXX family of microcontrollers, respectively. These compilers provide powerful integration capabilities and ease of use not found with other compilers.

For easier source level debugging, the compilers provide symbol information that is compatible with the MPLAB IDE memory display.

© 1999 Microchip Technology Inc.

9.4 MPLINK/MPLIB Linker/Librarian

MPLINK is a relocatable linker for MPASM and MPLAB-C17 and MPLAB-C18. It can link relocatable objects from assembly or C source files along with pre-compiled libraries using directives from a linker script.

MPLIB is a librarian for pre-compiled code to be used with MPLINK. When a routine from a library is called from another source file, only the modules that contains that routine will be linked in with the application. This allows large libraries to be used efficiently in many different applications. MPLIB manages the creation and modification of library files.

MPLINK features include:

- MPLINK works with MPASM and MPLAB-C17 and MPLAB-C18.
- MPLINK allows all memory areas to be defined as sections to provide link-time flexibility.

MPLIB features include:

- MPLIB makes linking easier because single libraries can be included instead of many smaller files.
- MPLIB helps keep code maintainable by grouping related modules together.
- MPLIB commands allow libraries to be created and modules to be added, listed, replaced, deleted, or extracted.

9.5 MPLAB-SIM Software Simulator

The MPLAB-SIM Software Simulator allows code development in a PC host environment by simulating the PICmicro series microcontrollers on an instruction level. On any given instruction, the data areas can be examined or modified and stimuli can be applied from a file or user-defined key press to any of the pins. The execution can be performed in single step, execute until break, or trace mode.

MPLAB-SIM fully supports symbolic debugging using MPLAB-C17 and MPLAB-C18 and MPASM. The Software Simulator offers the flexibility to develop and debug code outside of the laboratory environment making it an excellent multi-project software development tool.

9.6 MPLAB-ICE High Performance Universal In-Circuit Emulator with MPLAB IDE

The MPLAB-ICE Universal In-Circuit Emulator is intended to provide the product development engineer with a complete microcontroller design tool set for PICmicro microcontrollers (MCUs). Software control of MPLAB-ICE is provided by the MPLAB Integrated Development Environment (IDE), which allows editing, “make” and download, and source debugging from a single environment.

Interchangeable processor modules allow the system to be easily reconfigured for emulation of different processors. The universal architecture of the MPLAB-ICE allows expansion to support new PICmicro microcontrollers.

The MPLAB-ICE Emulator System has been designed as a real-time emulation system with advanced features that are generally found on more expensive development tools. The PC platform and Microsoft® Windows 3.x/95/98 environment were chosen to best make these features available to you, the end user.

MPLAB-ICE 2000 is a full-featured emulator system with enhanced trace, trigger, and data monitoring features. Both systems use the same processor modules and will operate across the full operating speed range of the PICmicro MCU.

9.7 PICMASTER/PICMASTER CE

The PICMASTER system from Microchip Technology is a full-featured, professional quality emulator system. This flexible in-circuit emulator provides a high-quality, universal platform for emulating Microchip 8-bit PICmicro microcontrollers (MCUs). PICMASTER systems are sold worldwide, with a CE compliant model available for European Union (EU) countries.

9.8 ICEPIC

ICEPIC is a low-cost in-circuit emulation solution for the Microchip Technology PIC16C5X, PIC16C6X, PIC16C7X, and PIC16CXXX families of 8-bit one-time-programmable (OTP) microcontrollers. The modular system can support different subsets of PIC16C5X or PIC16CXXX products through the use of interchangeable personality modules or daughter boards. The emulator is capable of emulating without target application circuitry being present.

9.9 MPLAB-ICD In-Circuit Debugger

Microchip’s In-Circuit Debugger, MPLAB-ICD, is a powerful, low-cost run-time development tool. This tool is based on the flash PIC16F877 and can be used to develop for this and other PICmicro microcontrollers from the PIC16CXXX family. MPLAB-ICD utilizes the In-Circuit Debugging capability built into the PIC16F87X. This feature, along with Microchip’s In-Circuit Serial Programming protocol, offers cost-effective in-circuit flash programming and debugging from the graphical user interface of the MPLAB Integrated Development Environment. This enables a designer to develop and debug source code by watching variables, single-stepping and setting break points. Running at full speed enables testing hardware in real-time. The MPLAB-ICD is also a programmer for the flash PIC16F87X family.

© 1999 Microchip Technology Inc.

9.10 PRO MATE II Universal Programmer

The PRO MATE II Universal Programmer is a full-featured programmer capable of operating in stand-alone mode as well as PC-hosted mode. PRO MATE II is CE compliant.

The PRO MATE II has programmable V_{DD} and V_{PP} supplies which allows it to verify programmed memory at V_{DD} min and V_{DD} max for maximum reliability. It has an LCD display for instructions and error messages, keys to enter commands and a modular detachable socket assembly to support various package types. In stand-alone mode the PRO MATE II can read, verify or program PICmicro devices. It can also set code-protect bits in this mode.

9.11 PICSTART Plus Entry Level Development System

The PICSTART programmer is an easy-to-use, low-cost prototype programmer. It connects to the PC via one of the COM (RS-232) ports. MPLAB Integrated Development Environment software makes using the programmer simple and efficient.

PICSTART Plus supports all PICmicro devices with up to 40 pins. Larger pin count devices such as the PIC16C92X, and PIC17C76X may be supported with an adapter socket. PICSTART Plus is CE compliant.

9.12 SIMICE Entry-Level Hardware Simulator

SIMICE is an entry-level hardware development system designed to operate in a PC-based environment with Microchip's simulator MPLAB-SIM. Both SIMICE and MPLAB-SIM run under Microchip Technology's MPLAB Integrated Development Environment (IDE) software. Specifically, SIMICE provides hardware simulation for Microchip's PIC12C5XX, PIC12CE5XX, and PIC16C5X families of PICmicro 8-bit microcontrollers. SIMICE works in conjunction with MPLAB-SIM to provide non-real-time I/O port emulation. SIMICE enables a developer to run simulator code for driving the target system. In addition, the target system can provide input to the simulator code. This capability allows for simple and interactive debugging without having to manually generate MPLAB-SIM stimulus files. SIMICE is a valuable debugging tool for entry-level system development.

9.13 PICDEM-1 Low-Cost PICmicro Demonstration Board

The PICDEM-1 is a simple board which demonstrates the capabilities of several of Microchip's microcontrollers. The microcontrollers supported are: PIC16C5X (PIC16C54 to PIC16C58A), PIC16C61, PIC16C62X, PIC16C71, PIC16C8X, PIC17C42, PIC17C43 and PIC17C44. All necessary hardware and software is included to run basic demo programs. The users can program the sample microcontrollers provided with the PICDEM-1 board, on a PRO MATE II or PICSTART-Plus programmer, and easily test firmware. The user can also connect the PICDEM-1 board to the MPLAB-ICE emulator and download the firmware to the emulator for testing. Additional prototype area is available for the user to build some additional hardware and connect it to the microcontroller socket(s). Some of the features include an RS-232 interface, a potentiometer for simulated analog input, push-button switches and eight LEDs connected to PORTB.

9.14 PICDEM-2 Low-Cost PIC16CXX Demonstration Board

The PICDEM-2 is a simple demonstration board that supports the PIC16C62, PIC16C64, PIC16C65, PIC16C73 and PIC16C74 microcontrollers. All the necessary hardware and software is included to run the basic demonstration programs. The user can program the sample microcontrollers provided with the PICDEM-2 board, on a PRO MATE II programmer or PICSTART-Plus, and easily test firmware. The MPLAB-ICE emulator may also be used with the PICDEM-2 board to test firmware. Additional prototype area has been provided to the user for adding additional hardware and connecting it to the microcontroller socket(s). Some of the features include a RS-232 interface, push-button switches, a potentiometer for simulated analog input, a Serial EEPROM to demonstrate usage of the I^2C bus and separate headers for connection to an LCD module and a keypad.

9.15 PICDEM-3 Low-Cost PIC16CXXX Demonstration Board

The PICDEM-3 is a simple demonstration board that supports the PIC16C923 and PIC16C924 in the PLCC package. It will also support future 44-pin PLCC microcontrollers with a LCD Module. All the necessary hardware and software is included to run the basic demonstration programs. The user can program the sample microcontrollers provided with the PICDEM-3 board, on a PRO MATE II programmer or PICSTART Plus with an adapter socket, and easily test firmware. The MPLAB-ICE emulator may also be used with the PICDEM-3 board to test firmware. Additional prototype area has been provided to the user for adding hardware and connecting it to the microcontroller socket(s). Some of the features include an RS-232 interface, push-button switches, a potentiometer for simulated analog input, a thermistor and separate headers for connection to an external LCD module and a keypad. Also provided on the PICDEM-3 board is an LCD panel, with 4 commons and 12 segments, that is capable of displaying time, temperature and day of the week. The PICDEM-3 provides an additional RS-232 interface and Windows 3.1 software for showing the demultiplexed LCD signals on a PC. A simple serial interface allows the user to construct a hardware demultiplexer for the LCD signals.

© 1999 Microchip Technology Inc.

9.16 PICDEM-17

The PICDEM-17 is an evaluation board that demonstrates the capabilities of several Microchip microcontrollers, including PIC17C752, PIC17C756, PIC17C762, and PIC17C766. All necessary hardware is included to run basic demo programs, which are supplied on a 3.5-inch disk. A programmed sample is included, and the user may erase it and program it with the other sample programs using the PRO MATE II or PICSTART Plus device programmers and easily debug and test the sample code. In addition, PICDEM-17 supports down-loading of programs to and executing out of external FLASH memory on board. The PICDEM-17 is also usable with the MPLAB-ICE or PICMASTER emulator, and all of the sample programs can be run and modified using either emulator. Additionally, a generous prototype area is available for user hardware.

9.17 SEEVAL Evaluation and Programming System

The SEEVAL SEEPROM Designer's Kit supports all Microchip 2-wire and 3-wire Serial EEPROMs. The kit includes everything necessary to read, write, erase or program special features of any Microchip SEEPROM product including Smart Serials™ and secure serials. The Total Endurance™ Disk is included to aid in trade-off analysis and reliability calculations. The total kit can significantly reduce time-to-market and result in an optimized system.

9.18 KEELOQ Evaluation and Programming Tools

KEELOQ evaluation and programming tools support Microchips HCS Secure Data Products. The HCS evaluation kit includes an LCD display to show changing codes, a decoder to decode transmissions, and a programming interface to program test transmitters.

© 1999 Microchip Technology Inc.

TABLE 9-1: DEVELOPMENT TOOLS FROM MICROCHIP

		PIC12CXXX	PIC14000	PIC16C5X	PIC16C6X	PIC16CXXX	PIC16F62X	PIC16C7X	PIC16C7XX	PIC16C8X	PIC16F8XX	PIC16C9XX	PIC17C4X	PIC17C7XX	PIC18CXX2	24CXX/ 25CXX/ 93CXX	HCSXXX	MCRFXXX	MCP2510
Software Tools	MPLAB™ Integrated Development Environment	✓	✓	✓	✓	✓	✓	✓	✓	✓	✓	✓	✓	✓	✓				
	MPLAB™ C17 Compiler												✓	✓					
	MPLAB™ C18 Compiler														✓				
	MPASM/MPLINK	✓	✓	✓	✓	✓	✓	✓	✓	✓	✓	✓	✓	✓	✓	✓	✓		
Emulators	MPLAB™-ICE	✓	✓	✓	✓	✓	✓**	✓	✓	✓	✓	✓	✓	✓	✓				
	PICMASTER/PICMASTER-CE	✓	✓	✓	✓	✓		✓	✓	✓		✓	✓	✓					
	ICEPIC™ Low-Cost In-Circuit Emulator	✓		✓	✓	✓		✓	✓	✓		✓							
Debugger	MPLAB-ICD In-Circuit Debugger				✓*			✓*			✓								
Programmers	PICSTART® Plus Low-Cost Universal Dev. Kit	✓	✓	✓	✓	✓	✓**	✓	✓	✓	✓	✓	✓	✓	✓				
	PRO MATE® II Universal Programmer	✓	✓	✓	✓	✓	✓**	✓	✓	✓	✓	✓	✓	✓	✓	✓	✓		
Demo Boards and Eval Kits	SIMICE	✓		✓															
	PICDEM-1			✓		✓		✓†		✓			✓						
	PICDEM-2				✓†			✓†							✓				
	PICDEM-3											✓							
	PICDEM-14A		✓																
	PICDEM-17													✓					
	KEELOQ® Evaluation Kit																✓		
	KEELOQ Transponder Kit																✓		
	microID™ Programmer's Kit																	✓	
	125 kHz microID Developer's Kit																	✓	
	125 kHz Anticollision microID Developer's Kit																	✓	
	13.56 MHz Anticollision microID Developer's Kit																	✓	
	MCP2510 CAN Developer's Kit																		✓

* Contact the Microchip Technology Inc. web site at www.microchip.com for information on how to use the MPLAB-ICD In-Circuit Debugger (DV164001) with PIC16C62, 63, 64, 65, 72, 73, 74, 76, 77

** Contact Microchip Technology Inc. for availability date.

† Development tool is available on select devices.

© 1999 Microchip Technology Inc.

NOTES:

© 1999 Microchip Technology Inc.

10.0 ELECTRICAL CHARACTERISTICS - PIC16C505

Absolute Maximum Ratings†

Ambient Temperature under bias ..... –40°C to +125°C

Storage Temperature ..... –65°C to +150°C

Voltage on V_{DD} with respect to V_{SS} ..... 0 to +7 V

Voltage on $\overline{MCLR}$ with respect to V_{SS} ..... 0 to +14 V

Voltage on all other pins with respect to V_{SS} ..... –0.6 V to (V_{DD} + 0.6 V)

Total Power Dissipation(1) ..... 700 mW

Max. Current out of V_{SS} pin ..... 150 mA

Max. Current into V_{DD} pin ..... 125 mA

Input Clamp Current, I_{IK} (V_I < 0 or V_I > V_{DD}) ..... ±20 mA

Output Clamp Current, I_{OK} (V_O < 0 or V_O > V_{DD}) ..... ±20 mA

Max. Output Current sunk by any I/O pin ..... 25 mA

Max. Output Current sourced by any I/O pin ..... 25 mA

Max. Output Current sourced by I/O port ..... 100 mA

Max. Output Current sunk by I/O port ..... 100 mA

Note 1: Power Dissipation is calculated as follows: $P_{DIS} = V_{DD} \times \{I_{DD} - \sum I_{OH}\} + \sum \{(V_{DD}-V_{OH}) \times I_{OH}\} + \sum(V_{OL} \times I_{OL})$

†NOTICE: Stresses above those listed under "Maximum Ratings" may cause permanent damage to the device. This is a stress rating only and functional operation of the device at those or any other conditions above those indicated in the operation listings of this specification is not implied. Exposure to maximum rating conditions for extended periods may affect device reliability.

FIGURE 10-1: PIC16C505 VOLTAGE-FREQUENCY GRAPH, 0°C ≤ TA ≤ +70°C

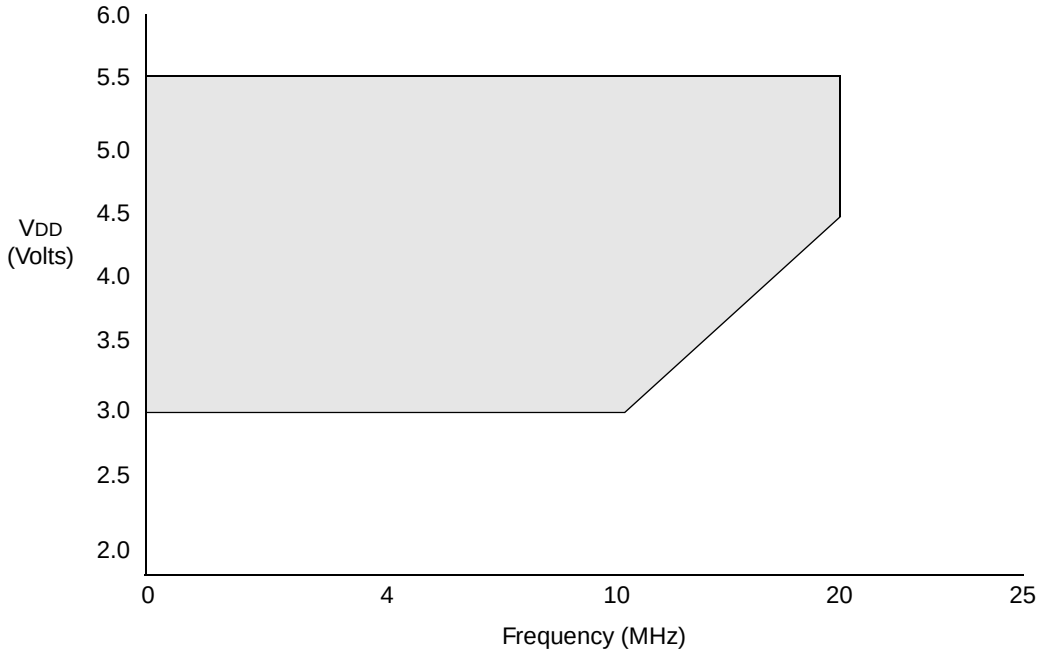

Note 1: The shaded region indicates the permissible combinations of voltage and frequency.

2: The maximum rated speed of the part limits the permissible combinations of voltage and frequency. Please reference the Product Identification System section for the maximum rated speed of the parts.

FIGURE 10-2: PIC16C505 VOLTAGE-FREQUENCY GRAPH, -40°C ≤ TA ≤ 0°C, +70°C ≤ TA ≤ +125°C

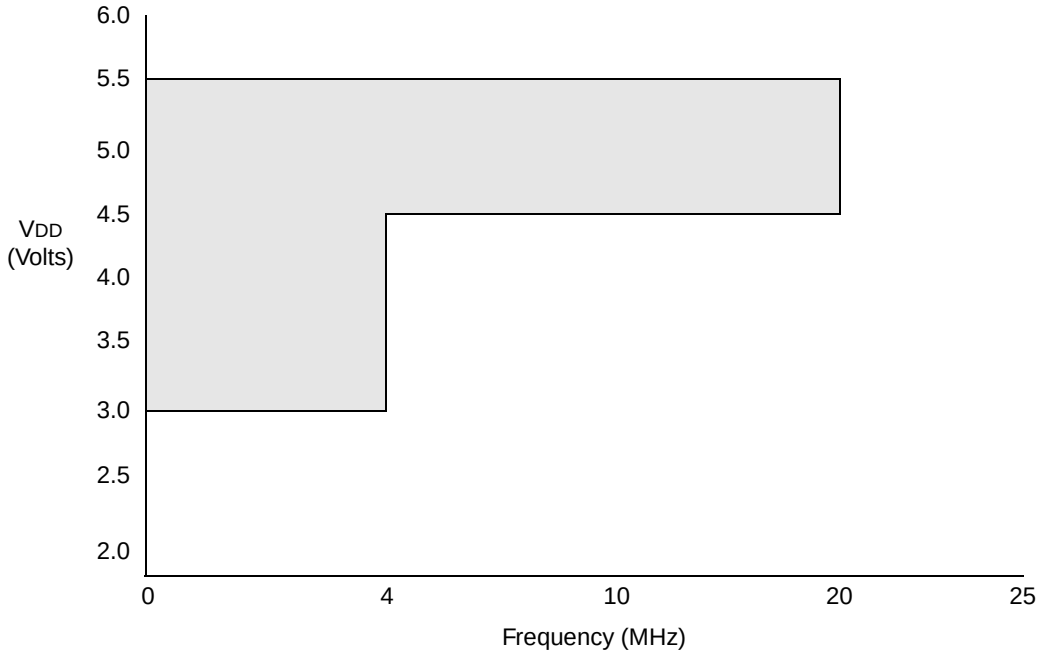

Note 1: The shaded region indicates the permissible combinations of voltage and frequency.

2: The maximum rated speed of the part limits the permissible combinations of voltage and frequency. Please reference the Product Identification System section for the maximum rated speed of the parts.

© 1999 Microchip Technology Inc.

FIGURE 10-3: PIC16LC505 VOLTAGE-FREQUENCY GRAPH, -40°C ≤ TA ≤ +85°C

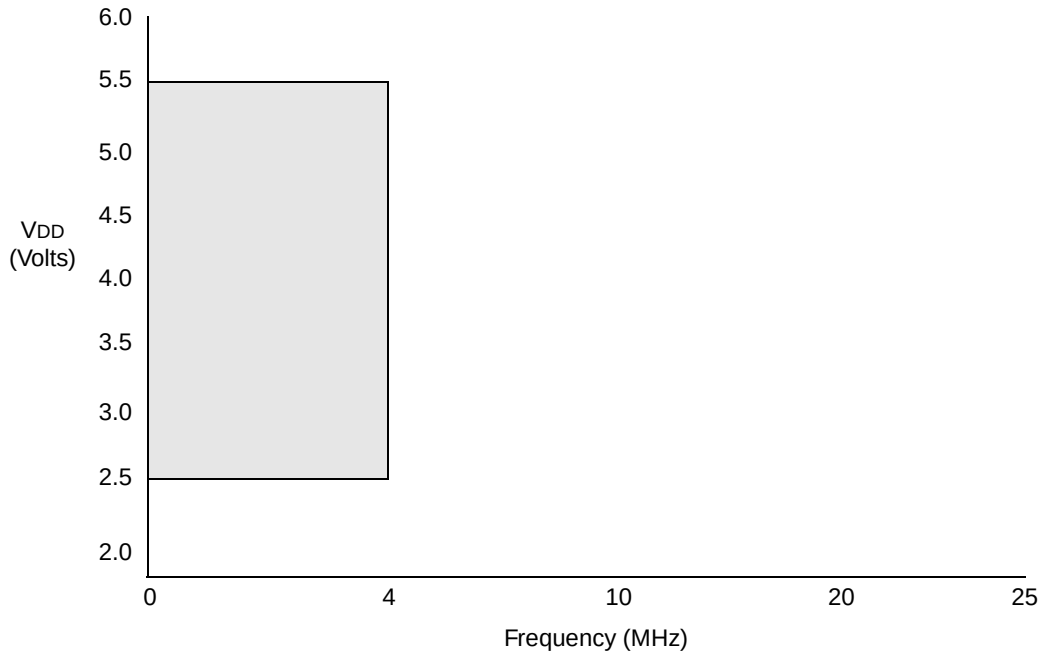

Note 1: The shaded region indicates the permissible combinations of voltage and frequency.

2: The maximum rated speed of the part limits the permissible combinations of voltage and frequency. Please reference the Product Identification System section for the maximum rated speed of the parts.

10.1 DC CHARACTERISTICS: PIC16C505-04 (Commercial, Industrial, Extended) PIC16C505-20(Commercial, Industrial, Extended)

DC Characteristics Power Supply Pins			Standard Operating Conditions (unless otherwise specified) Operating Temperature 0°C ≤ TA ≤ +70°C (commercial) –40°C ≤ TA ≤ +85°C (industrial) –40°C ≤ TA ≤ +125°C (extended)				
Parm. No.	**Characteristic**	**Sym**	**Min**	**Typ(1)**	**Max**	**Units**	**Conditions**
D001	Supply Voltage	VDD	3.0		5.5	V	See Figure 10-1 through Figure 10-3
D002	RAM Data Retention Voltage(2)	VDR	—	1.5*	—	V	Device in SLEEP mode
D003	VDD Start Voltage to ensure Power-on Reset	VPOR	—	VSS	—	V	See section on Power-on Reset for details
D004	VDD Rise Rate to ensure Power-on Reset	SVDD	0.05*	—	—	V/ms	See section on Power-on Reset for details
D010	Supply Current(3)	IDD	— — — — — —	0.8 0.6 3 4 4.5 19	1.4 1.0 7 12 16 27	mA mA mA mA mA µA	FOSC = 4MHz, VDD = 5.5V, WDT disabled (Note 4)* FOSC = 4MHz, VDD = 3.0V, WDT disabled (Note 4) FOSC = 10MHz, VDD = 3.0V, WDT disabled (Note 6) FOSC = 20MHz, VDD = 4.5V, WDT disabled FOSC = 20MHz, VDD = 5.5V, WDT disabled* FOSC = 32kHz, VDD = 3.0V, WDT disabled (Note 6)
D020	Power-Down Current (5)	IPD	— — — —	0.25 0.4 3 5	4 5.5 8 14	µA µA µA µA	VDD = 3.0V (Note 6) VDD = 4.5V* (Note 6) VDD = 5.5V, Industrial VDD = 5.5V, Extended Temp.
D022	WDT Current(5)	ΔIWDT	—	2.2	5	µA	VDD = 3.0V (Note 6)
1A	LP Oscillator Operating Frequency RC Oscillator Operating Frequency XT Oscillator Operating Frequency HS Oscillator Operating Frequency	Fosc	0 0 0 0	— — — —	200 4 4 20	kHz MHz MHz MHz	All temperatures All temperatures All temperatures All temperatures

* These parameters are characterized but not tested.

Note 1: Data in the Typical ("Typ") column is based on characterization results at 25°C. This data is for design guidance only and is not tested.

2: This is the limit to which VDD can be lowered in SLEEP mode without losing RAM data.

3: The supply current is mainly a function of the operating voltage and frequency. Other factors such as bus loading, oscillator type, bus rate, internal code execution pattern and temperature also have an impact on the current consumption.

a) The test conditions for all IDD measurements in active operation mode are:
OSC1 = external square wave, from rail-to-rail; all I/O pins tristated, pulled to VSS, T0CKI = VDD, $\overline{\text{MCLR}}$ = VDD; WDT enabled/disabled as specified.

b) For standby current measurements, the conditions are the same, except that the device is in SLEEP mode.

4: Does not include current through Rext. The current through the resistor can be estimated by the formula: IR = VDD/2Rext (mA) with Rext in kOhm.

5: The power down current in SLEEP mode does not depend on the oscillator type. Power down current is measured with the part in SLEEP mode, with all I/O pins in hi-impedance state and tied to VDD or VSS.

6: Commercial temperature range only.

© 1999 Microchip Technology Inc.

10.2 DC CHARACTERISTICS: PIC16LC505-04 (Commercial, Industrial)

DC Characteristics Power Supply Pins			Standard Operating Conditions (unless otherwise specified) Operating Temperature 0°C ≤ TA ≤ +70°C (commercial) –40°C ≤ TA ≤ +85°C (industrial)				
Parm. No.	**Characteristic**	**Sym**	**Min**	**Typ(1)**	**Max**	**Units**	**Conditions**
D001	Supply Voltage	VDD	2.5	—	5.5	V	See Figure 10-1 through Figure 10-3
D002	RAM Data Retention Voltage(2)	VDR	—	1.5*	—	V	Device in SLEEP mode
D003	VDD Start Voltage to ensure Power-on Reset	VPOR	—	VSS	—	V	See section on Power-on Reset for details
D004	VDD Rise Rate to ensure Power-on Reset	SVDD	0.05*	—	—	V/ms	See section on Power-on Reset for details
D010	Supply Current(3)	IDD	—	0.8	1.4	mA	FOSC = 4MHz, VDD = 5.5V, WDT disabled (Note 4)*
			—	0.4	0.8	mA	FOSC = 4MHz, VDD = 2.5V, WDT disabled (Note 4)
			—	15	23	µA	FOSC = 32kHz, VDD = 2.5V, WDT disabled (Note 6)
D020	Power-Down Current (5)	IPD	—	0.25	3	µA	VDD = 2.5V (Note 6)
			—	0.25	4	µA	VDD = 3.0V * (Note 6)
			—	3	8	µA	VDD = 5.5V Industrial
D022	WDT Current(5)	ΔIWDT	—	2.0	4	µA	VDD = 2.5V (Note 6)
1A	LP Oscillator Operating Frequency	FOSC	0	—	200	kHz	All temperatures
	RC Oscillator Operating Frequency		0	—	4	MHz	All temperatures
	XT Oscillator Operating Frequency		0	—	4	MHz	All temperatures
	HS Oscillator Operating Frequency		0	—	4	MHz	All temperatures

* These parameters are characterized but not tested.

Note 1: Data in the Typical ("Typ") column is based on characterization results at 25°C. This data is for design guidance only and is not tested.

2: This is the limit to which VDD can be lowered in SLEEP mode without losing RAM data.

3: The supply current is mainly a function of the operating voltage and frequency. Other factors such as bus loading, oscillator type, bus rate, internal code execution pattern and temperature also have an impact on the current consumption.

a) The test conditions for all IDD measurements in active operation mode are:
OSC1 = external square wave, from rail-to-rail; all I/O pins tristated, pulled to VSS, T0CKI = VDD, $\overline{\text{MCLR}}$ = VDD; WDT enabled/disabled as specified.

b) For standby current measurements, the conditions are the same, except that the device is in SLEEP mode.

4: Does not include current through Rext. The current through the resistor can be estimated by the formula: IR = VDD/2Rext (mA) with Rext in kOhm.

5: The power down current in SLEEP mode does not depend on the oscillator type. Power down current is measured with the part in SLEEP mode, with all I/O pins in hi-impedance state and tied to VDD or VSS.

6: Commercial temperature range only.

10.3 DC CHARACTERISTICS: PIC16C505-04 (Commercial, Industrial, Extended) PIC16C505-20(Commercial, Industrial, Extended) PIC16LC505-04 (Commercial, Industrial)

DC CHARACTERISTICS							Standard Operating Conditions (unless otherwise specified) Operating temperature 0°C ≤ TA ≤ +70°C (commercial) –40°C ≤ TA ≤ +85°C (industrial) –40°C ≤ TA ≤ +125°C (extended) Operating voltage VDD range as described in DC spec Section 10.1 and Section 10.3.
Param No.	**Characteristic**	**Sym**	**Min**	**Typ†**	**Max**	**Units**	**Conditions**
	Input Low Voltage						
	I/O ports	VIL					
D030	with TTL buffer		VSS	—	0.8V	V	For all 4.5 ≤ VDD ≤ 5.5V
D030A			VSS	—	0.15VDD	V	otherwise
D031	with Schmitt Trigger buffer		VSS	—	0.2VDD	V	
D032	MCLR, RC5/T0CKI (in EXTRC mode)		VSS	—	0.2VDD	V	
D033	OSC1 (in XT, HS and LP)		VSS	—	0.3VDD	V	Note1
	Input High Voltage						
	I/O ports	VIH		—			
D040	with TTL buffer		2.0	—	VDD	V	4.5 ≤ VDD ≤ 5.5V
D040A			0.25VDD + 0.8VDD	—	VDD	V	otherwise
D041	with Schmitt Trigger buffer		0.8VDD	—	VDD	V	For entire VDD range
D042	MCLR, RC5/T0CKI		0.8VDD	—	VDD	V	
D042A	OSC1 (XT, HS and LP)		0.7VDD	—	VDD	V	Note1
D043	OSC1 (in EXTRC mode)		0.9VDD	—	VDD	V	
D070	GPIO weak pull-up current (Note 4)	IPUR	50	250	400	μA	VDD = 5V, VPIN = VSS
	Input Leakage Current (Notes 2, 3)						
D060	I/O ports	IIL	—	—	±1	μA	Vss ≤ VPIN ≤ VDD, Pin at hi-impedance
D061	GP3/$\overline{\text{MCLR}}$I (Note 5)		—	—	±30	μA	Vss ≤ VPIN ≤ VDD
D061A	GP3/$\overline{\text{MCLR}}$I (Note 6)		—	—	±5	μA	Vss ≤ VPIN ≤ VDD
D063	OSC1		—	—	±5	μA	Vss ≤ VPIN ≤ VDD, XT, HS and LP osc configuration
	Output Low Voltage						
D080	I/O ports/CLKOUT	VOL	—	—	0.6	V	IOL = 8.5 mA, VDD = 4.5V, –40°C to +85°C
D080A			—	—	0.6	V	IOL = 7.0 mA, VDD = 4.5V, –40°C to +125°C
D083	OSC2		—	—	0.6	V	IOL = 1.6 mA, VDD = 4.5V, –40°C to +85°C
D083A			—	—	0.6	V	IOL = 1.2 mA, VDD = 4.5V, –40°C to +125°C

† Data in "Typ" column is at 5V, 25°C unless otherwise stated. These parameters are for design guidance only and are not tested.

Note 1: In EXTRC oscillator configuration, the OSC1/CLKIN pin is a Schmitt Trigger input. It is not recommended that the PIC16C505 be driven with external clock in RC mode.

2: The leakage current on the $\overline{\text{MCLR}}$ pin is strongly dependent on the applied voltage level. The specified levels represent normal operating conditions. Higher leakage current may be measured at different input voltages.

3: Negative current is defined as coming out of the pin.

4: Does not include GP3. For GP3 see parameters D061 and D061A.

5: This spec. applies to GP3/$\overline{\text{MCLR}}$ configured as external $\overline{\text{MCLR}}$ and GP3/$\overline{\text{MCLR}}$ configured as input with internal pull-up enabled.

6: This spec. applies when GP3/$\overline{\text{MCLR}}$ is configured as an input with pull-up disabled. The leakage current of the $\overline{\text{MCLR}}$ circuit is higher than the standard I/O logic.

© 1999 Microchip Technology Inc.

DC CHARACTERISTICS							Standard Operating Conditions (unless otherwise specified) Operating temperature 0°C ≤ TA ≤ +70°C (commercial) –40°C ≤ TA ≤ +85°C (industrial) –40°C ≤ TA ≤ +125°C (extended) Operating voltage VDD range as described in DC spec Section 10.1 and Section 10.3.
Param No.	**Characteristic**	**Sym**	**Min**	**Typ†**	**Max**	**Units**	**Conditions**
	Output High Voltage						
D090	I/O ports/CLKOUT (Note 3)	VOH	VDD - 0.7	—	—	V	IOH = -3.0 mA, VDD = 4.5V, –40°C to +85°C
D090A			VDD - 0.7	—	—	V	IOH = -2.5 mA, VDD = 4.5V, –40°C to +125°C
D092	OSC2		VDD - 0.7	—	—	V	IOH = -1.3 mA, VDD = 4.5V, –40°C to +85°C
D092A			VDD - 0.7	—	—	V	IOH = -1.0 mA, VDD = 4.5V, –40°C to +125°C
	Capacitive Loading Specs on Output Pins						
D100	OSC2 pin	COSC2	—	—	15	pF	In XT, HS and LP modes when external clock is used to drive OSC1.
D101	All I/O pins and OSC2	CIO	—	—	50	pF	

† Data in “Typ” column is at 5V, 25°C unless otherwise stated. These parameters are for design guidance only and are not tested.

Note 1: In EXTRC oscillator configuration, the OSC1/CLKIN pin is a Schmitt Trigger input. It is not recommended that the PIC16C505 be driven with external clock in RC mode.

2: The leakage current on the $\overline{\text{MCLR}}$ pin is strongly dependent on the applied voltage level. The specified levels represent normal operating conditions. Higher leakage current may be measured at different input voltages.

3: Negative current is defined as coming out of the pin.

4: Does not include GP3. For GP3 see parameters D061 and D061A.

5: This spec. applies to GP3/$\overline{\text{MCLR}}$ configured as external $\overline{\text{MCLR}}$ and GP3/$\overline{\text{MCLR}}$ configured as input with internal pull-up enabled.

6: This spec. applies when GP3/$\overline{\text{MCLR}}$ is configured as an input with pull-up disabled. The leakage current of the $\overline{\text{MCLR}}$ circuit is higher than the standard I/O logic.

TABLE 10-1: PULL-UP RESISTOR RANGES - PIC16C505

VDD (Volts)	Temperature (°C)	Min	Typ	Max	Units
RB0/RB1/RB4					
2.5	–40	38K	42K	63K	W
	25	42K	48K	63K	W
	85	42K	49K	63K	W
	125	50K	55K	63K	W
5.5	–40	15K	17K	20K	W
	25	18K	20K	23K	W
	85	19K	22K	25K	W
	125	22K	24K	28K	W
RB3					
2.5	–40	285K	346K	417K	W
	25	343K	414K	532K	W
	85	368K	457K	532K	W
	125	431K	504K	593K	W
5.5	–40	247K	292K	360K	W
	25	288K	341K	437K	W
	85	306K	371K	448K	W
	125	351K	407K	500K	W

* These parameters are characterized but not tested.

© 1999 Microchip Technology Inc.

10.4 Timing Parameter Symbology and Load Conditions - PIC16C505

The timing parameter symbols have been created following one of the following formats:

1. TppS2ppS
2. TppS

T			
F	Frequency	T	Time

Lowercase subscripts (pp) and their meanings:

pp			
2	to	mc	$\overline{\text{MCLR}}$
ck	CLKOUT	osc	oscillator
cy	cycle time	os	OSC1
drt	device reset timer	t0	T0CKI
io	I/O port	wdt	watchdog timer

Uppercase letters and their meanings:

S			
F	Fall	P	Period
H	High	R	Rise
I	Invalid (Hi-impedance)	V	Valid
L	Low	Z	Hi-impedance

FIGURE 10-4: LOAD CONDITIONS - PIC16C505

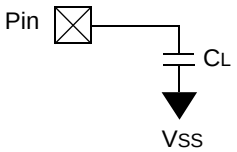

C_L = 50 pF for all pins except OSC2
15 pF for OSC2 in XT, HS or LP modes when external clock is used to drive OSC1

10.5 Timing Diagrams and Specifications

FIGURE 10-5: EXTERNAL CLOCK TIMING - PIC16C505

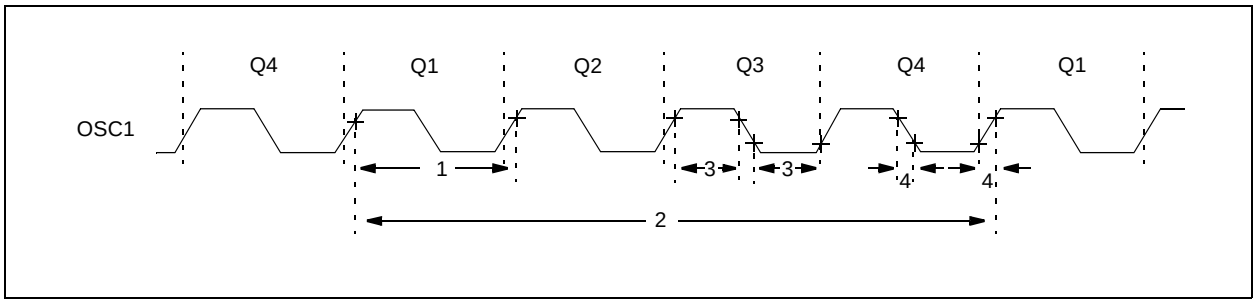

TABLE 10-2: EXTERNAL CLOCK TIMING REQUIREMENTS - PIC16C505

AC Characteristics	Standard Operating Conditions (unless otherwise specified) Operating Temperature 0°C ≤ TA ≤ +70°C (commercial), –40°C ≤ TA ≤ +85°C (industrial), –40°C ≤ TA ≤ +125°C (extended) Operating Voltage VDD range is described in Section 10.1						
Parameter No.	**Sym**	**Characteristic**	**Min**	**Typ(1)**	**Max**	**Units**	**Conditions**
1A	FOSC	External CLKIN Frequency(2)	DC	—	4	MHz	XT osc mode
			DC	—	4	MHz	HS osc mode (PIC16C505-04)
			DC	—	20	MHz	HS osc mode (PIC16C505-20)
			DC	—	200	kHz	LP osc mode
		Oscillator Frequency(2)	DC	—	4	MHz	EXTRC osc mode
			0.1	—	4	MHz	XT osc mode
			4	—	4	MHz	HS osc mode (PIC16C505-04)
			DC	—	200	kHz	LP osc mode
1	TOSC	External CLKIN Period(2)	250	—	—	ns	XT osc mode
			50	—	—	ns	HS osc mode (PIC16C505-20)
				—	—	µs	LP osc mode
		Oscillator Period(2)	250	—	—	ns	EXTRC osc mode
			250	—	10,000	ns	XT osc mode
			250	—	250	ns	HS ocs mode (PIC16C505-04)
			50	—	250	ns	HS ocs mode (PIC16C505-20)
			5	—	—	µs	LP osc mode
2	TCY	Instruction Cycle Time	—	4/FOSC	DC	ns	
			200	—		ns	

* These parameters are characterized but not tested.

Note 1: Data in the Typical ("Typ") column is at 5V, 25°C unless otherwise stated. These parameters are for design guidance only and are not tested.

2: All specified values are based on characterization data for that particular oscillator type under standard operating conditions with the device executing code. Exceeding these specified limits may result in an unstable oscillator operation and/or higher than expected current consumption.
When an external clock input is used, the "max" cycle time limit is "DC" (no clock) for all devices.

© 1999 Microchip Technology Inc.

TABLE 10-2: EXTERNAL CLOCK TIMING REQUIREMENTS - PIC16C505 (CONTINUED)

AC Characteristics	Standard Operating Conditions (unless otherwise specified) Operating Temperature 0°C ≤ TA ≤ +70°C (commercial), –40°C ≤ TA ≤ +85°C (industrial), –40°C ≤ TA ≤ +125°C (extended) Operating Voltage VDD range is described in Section 10.1						
Parameter No.	**Sym**	**Characteristic**	**Min**	**Typ(1)**	**Max**	**Units**	**Conditions**
3	TosL, TosH	Clock in (OSC1) Low or High Time	50*	—	—	ns	XT oscillator
			2*	—	—	µs	LP oscillator
			10			ns	HS oscillator
4	TosR, TosF	Clock in (OSC1) Rise or Fall Time	—	—	25*	ns	XT oscillator
			—	—	50*	ns	LP oscillator
			—	—	15	ns	HS oscillator

* These parameters are characterized but not tested.

Note 1: Data in the Typical ("Typ") column is at 5V, 25°C unless otherwise stated. These parameters are for design guidance only and are not tested.

2: All specified values are based on characterization data for that particular oscillator type under standard operating conditions with the device executing code. Exceeding these specified limits may result in an unstable oscillator operation and/or higher than expected current consumption.
When an external clock input is used, the "max" cycle time limit is "DC" (no clock) for all devices.

TABLE 10-3: CALIBRATED INTERNAL RC FREQUENCIES - PIC16C505

AC Characteristics	Standard Operating Conditions (unless otherwise specified) Operating Temperature 0°C ≤ TA ≤ +70°C (commercial), –40°C ≤ TA ≤ +85°C (industrial), –40°C ≤ TA ≤ +125°C (extended) Operating Voltage VDD range is described in Section 10.1						
Parameter No.	**Sym**	**Characteristic**	**Min***	**Typ(1)**	**Max***	**Units**	**Conditions**
		Internal Calibrated RC Frequency	3.65	4.00	4.28	MHz	VDD = 5.0V
		Internal Calibrated RC Frequency	3.55	4.00	4.31	MHz	VDD = 2.5V

* These parameters are characterized but not tested.

Note 1: Data in the Typical ("Typ") column is at 5V, 25°C unless otherwise stated. These parameters are for design guidance only and are not tested.

FIGURE 10-6: I/O TIMING - PIC16C505

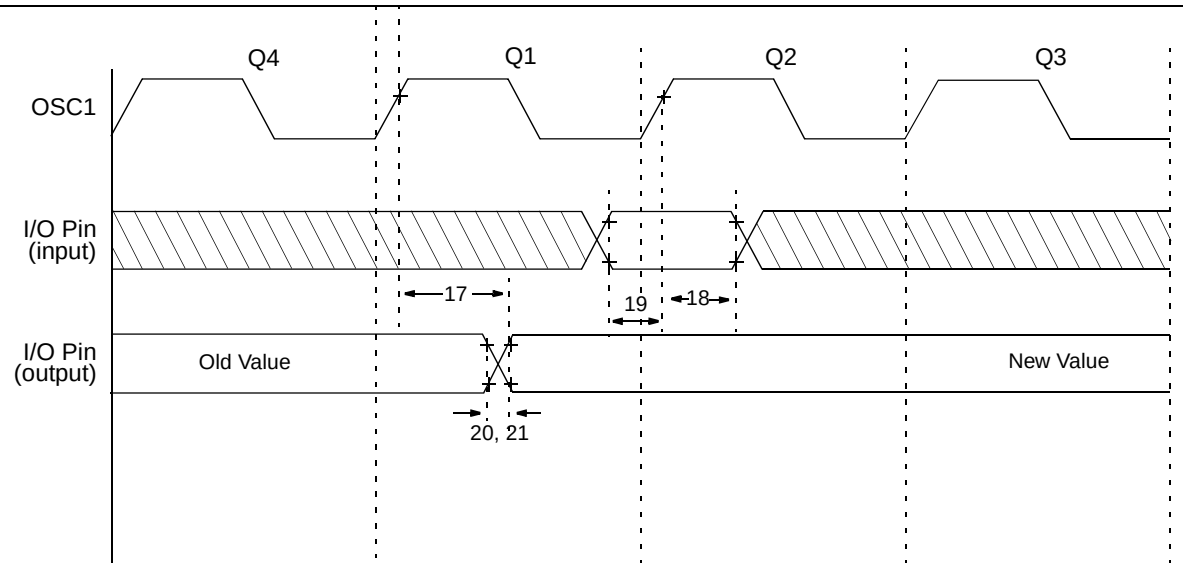

Note: All tests must be done with specified capacitive loads (see data sheet) 50 pF on I/O pins and CLKOUT.

TABLE 10-4: TIMING REQUIREMENTS - PIC16C505

AC Characteristics	**Standard Operating Conditions (unless otherwise specified)** Operating Temperature 0°C ≤ TA ≤ +70°C (commercial) –40°C ≤ TA ≤ +85°C (industrial) –40°C ≤ TA ≤ +125°C (extended) Operating Voltage VDD range is described in Section 10.1					
Parameter No.	**Sym**	**Characteristic**	**Min**	**Typ(1)**	**Max**	**Units**
17	TosH2ioV	OSC1↑ (Q1 cycle) to Port out valid(2,3)	—	—	100*	ns
18	TosH2ioI	OSC1↑ (Q2 cycle) to Port input invalid (I/O in hold time)(2)	TBD	—	—	ns
19	TioV2osH	Port input valid to OSC1↑ (I/O in setup time)	TBD	—	—	ns
20	TioR	Port output rise time(3)	—	10	25**	ns
21	TioF	Port output fall time(3)	—	10	25**	ns

* These parameters are characterized but not tested.

** These parameters are design targets and are not tested.

Note 1: Data in the Typical ("Typ") column is at 5V, 25°C unless otherwise stated. These parameters are for design guidance only and are not tested.

2: Measurements are taken in EXTRC mode.

3: See Figure 10-4 for loading conditions.

© 1999 Microchip Technology Inc.

FIGURE 10-7: RESET, WATCHDOG TIMER, AND DEVICE RESET TIMER TIMING - PIC16C505

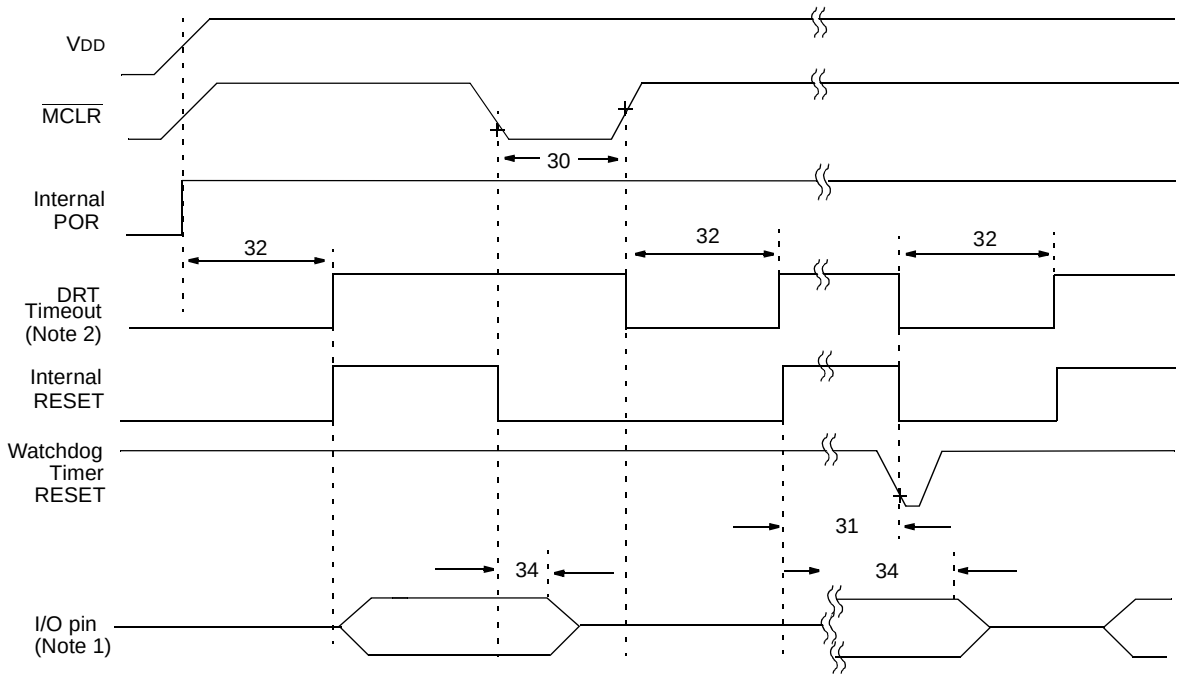

Note 1: I/O pins must be taken out of hi-impedance mode by enabling the output drivers in software.

2: Runs in $\overline{\text{MCLR}}$ or WDT reset only in XT, LP and HS modes.

TABLE 10-5: RESET, WATCHDOG TIMER, AND DEVICE RESET TIMER - PIC16C505

AC Characteristics	**Standard Operating Conditions (unless otherwise specified)** Operating Temperature 0°C ≤ TA ≤ +70°C (commercial) –40°C ≤ TA ≤ +85°C (industrial) –40°C ≤ TA ≤ +125°C (extended) Operating Voltage VDD range is described in Section 10.1						
Parameter No.	**Sym**	**Characteristic**	**Min**	**Typ(1)**	**Max**	**Units**	**Conditions**
30	TmcL	$\overline{\text{MCLR}}$ Pulse Width (low)	2000*	—	—	ns	VDD = 5.0 V
31	Twdt	Watchdog Timer Time-out Period (No Prescaler)	9*	18*	30*	ms	VDD = 5.0 V (Commercial)
32	TDRT	Device Reset Timer Period(2)	9*	18*	30*	ms	VDD = 5.0 V (Commercial)
34	TioZ	I/O Hi-impedance from $\overline{\text{MCLR}}$ Low	—	—	2000*	ns	

* These parameters are characterized but not tested.

Note 1: Data in the Typical ("Typ") column is at 5V, 25°C unless otherwise stated. These parameters are for design guidance only and are not tested.

TABLE 10-6: DRT (DEVICE RESET TIMER PERIOD - PIC16C505

Oscillator Configuration	**POR Reset**	**Subsequent Resets**
IntRC & ExtRC	18 ms (typical)	300 µs (typical)
XT, HS & LP	18 ms (typical)	18 ms (typical)

© 1999 Microchip Technology Inc.

FIGURE 10-8: TIMER0 CLOCK TIMINGS - PIC16C505

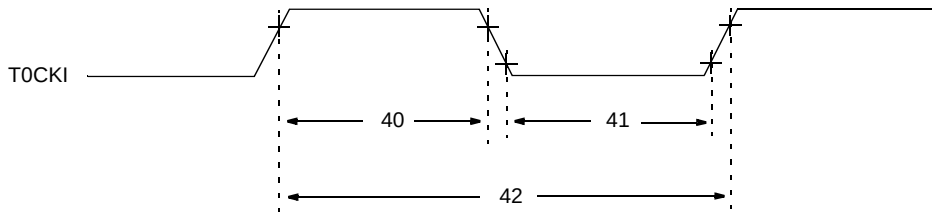

TABLE 10-7: TIMER0 CLOCK REQUIREMENTS - PIC16C505

AC Characteristics				Standard Operating Conditions (unless otherwise specified) Operating Temperature 0°C ≤ TA ≤ +70°C (commercial) –40°C ≤ TA ≤ +85°C (industrial) –40°C ≤ TA ≤ +125°C (extended) Operating Voltage VDD range is described in Section 10.1.				
Parm No.	**Sym**	**Characteristic**		**Min**	**Typ(1)**	**Max**	**Units**	**Conditions**
40	Tt0H	T0CKI High Pulse Width	No Prescaler	0.5 TCY + 20*	—	—	ns	
			With Prescaler	10*	—	—	ns	
41	Tt0L	T0CKI Low Pulse Width	No Prescaler	0.5 TCY + 20*	—	—	ns	
			With Prescaler	10*	—	—	ns	
42	Tt0P	T0CKI Period		20 or TCY + 40* N	—	—	ns	Whichever is greater. N = Prescale Value (1, 2, 4,..., 256)

* These parameters are characterized but not tested.

Note 1: Data in the Typical ("Typ") column is at 5V, 25°C unless otherwise stated. These parameters are for design guidance only and are not tested.

© 1999 Microchip Technology Inc.

11.0 DC AND AC CHARACTERISTICS - PIC16C505

The graphs and tables provided in this section are for design guidance and are not tested. In some graphs or tables the data presented are outside specified operating range (e.g., outside specified V_{DD} range). This is for information only and devices will operate properly only within the specified range.

The data presented in this section is a statistical summary of data collected on units from different lots over a period of time. “Typical” represents the mean of the distribution while “max” or “min” represents (mean + 3σ) and (mean – 3σ) respectively, where σ is standard deviation.

FIGURE 11-1: CALIBRATED INTERNAL RC FREQUENCY RANGE VS. TEMPERATURE (V_{DD} = 5.0V) (INTERNAL RC IS CALIBRATED TO 25°C, 5.0V)

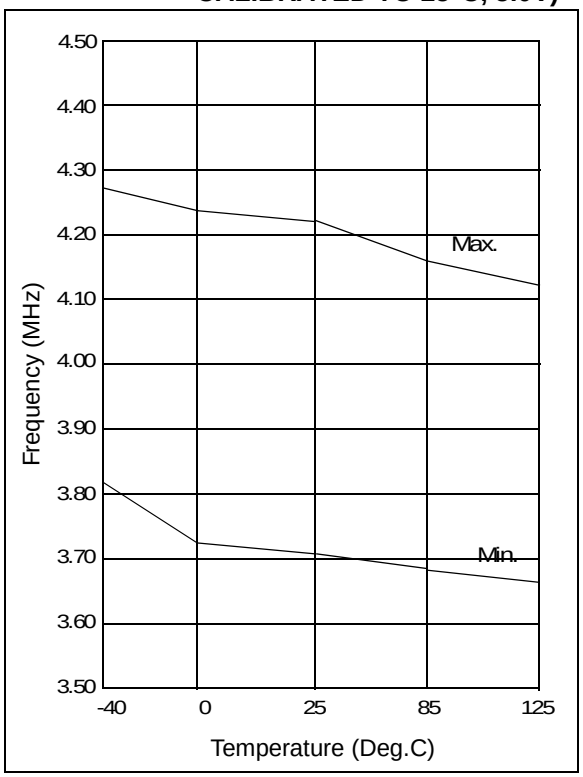

FIGURE 11-2: CALIBRATED INTERNAL RC FREQUENCY RANGE VS. TEMPERATURE (V_{DD} = 2.5V) (INTERNAL RC IS CALIBRATED TO 25°C, 5.0V)

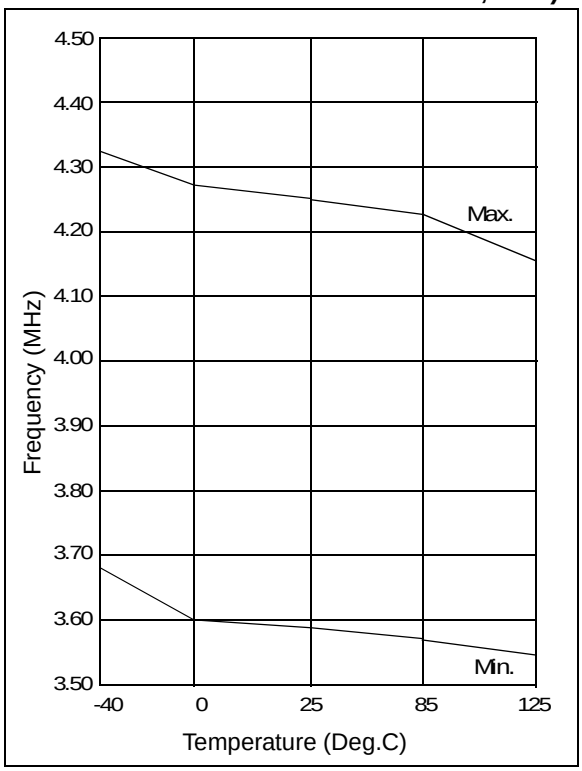

TABLE 11-1: DYNAMIC IDD (TYPICAL) - WDT ENABLED, 25°C

Oscillator	Frequency	VDD = 3.0V(1)	VDD = 5.5V
External RC	4 MHz	240 µA(2)	800 µA(2)
Internal RC	4 MHz	320 µA	800 µA
XT	4 MHz	300 µA	800 µA
LP	32 kHz	19 µA	50 µA
HS	20 MHz	N/A	4.5 mA

Note 1: LP oscillator based on VDD = 2.5V
2: Does not include current through external R&C.

FIGURE 11-3: WDT TIMER TIME-OUT PERIOD vs. VDD

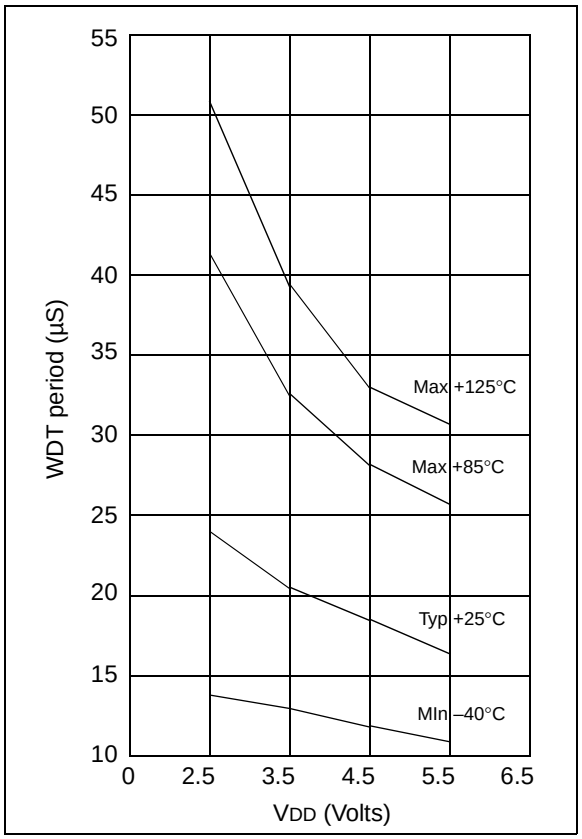

FIGURE 11-4: SHORT DRT PERIOD VS. VDD

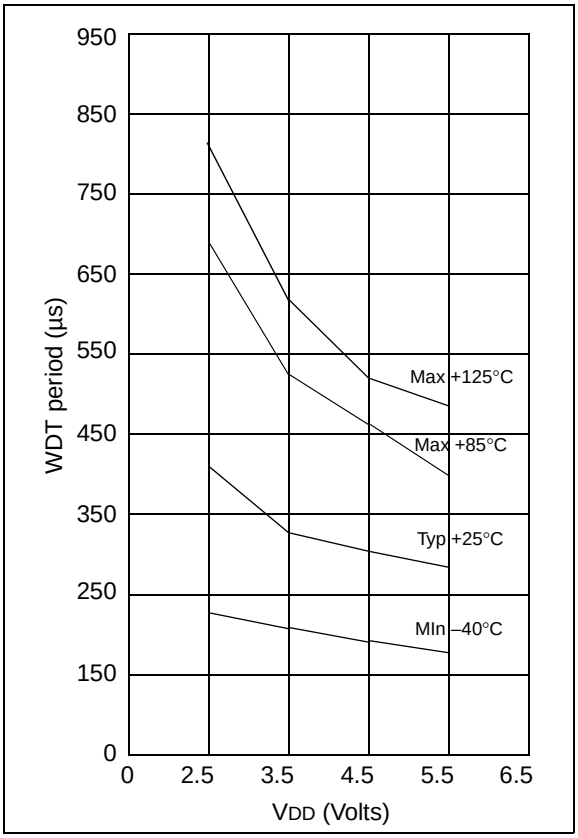

© 1999 Microchip Technology Inc.

FIGURE 11-5: IOH vs. VOH, VDD = 2.5 V

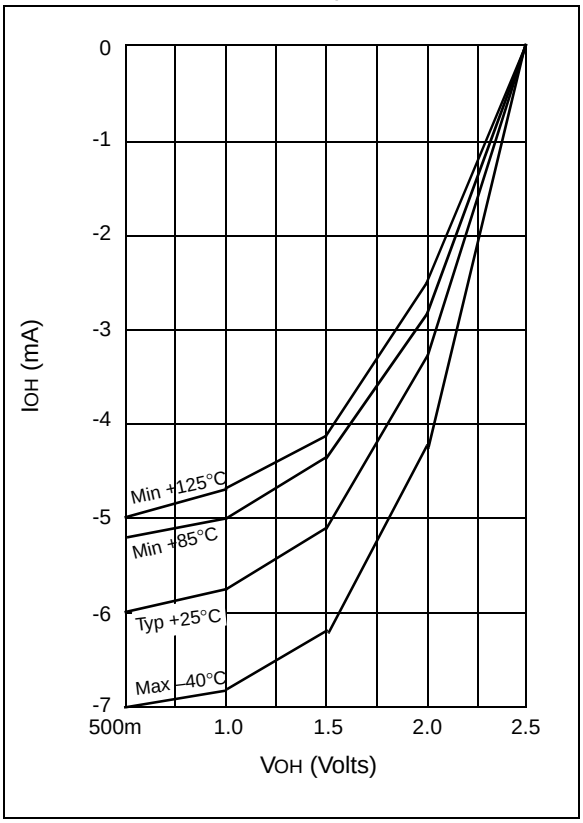

FIGURE 11-6: IOH vs. VOH, VDD = 5.5 V

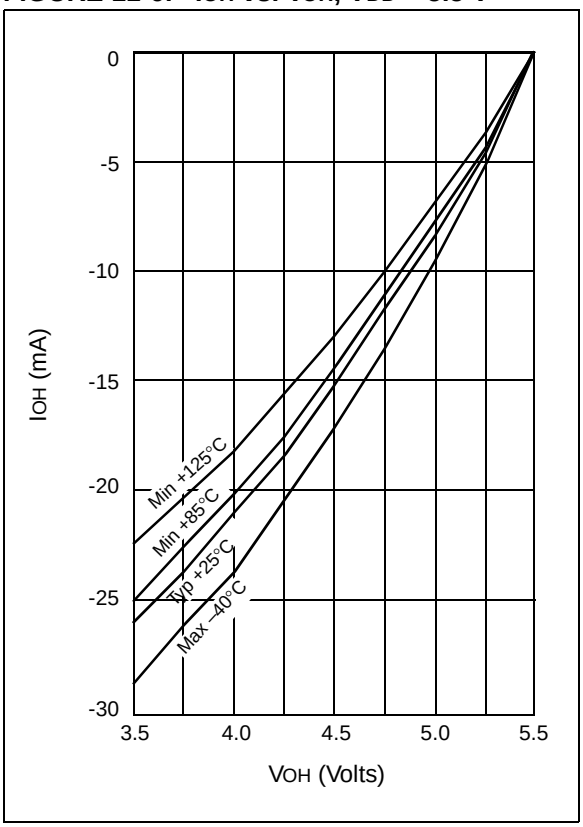

FIGURE 11-7: IOL vs. VOL, VDD = 2.5 V

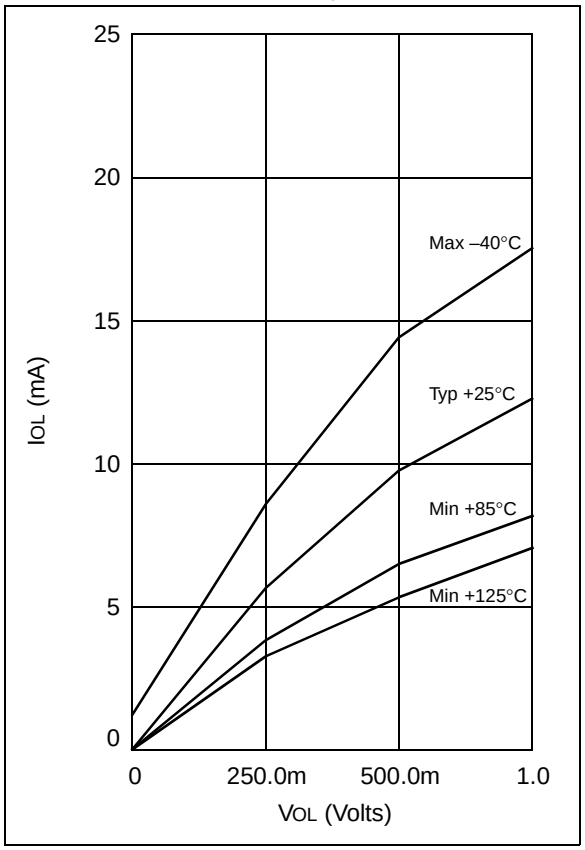

FIGURE 11-8: IOL vs. VOL, VDD = 5.5 V

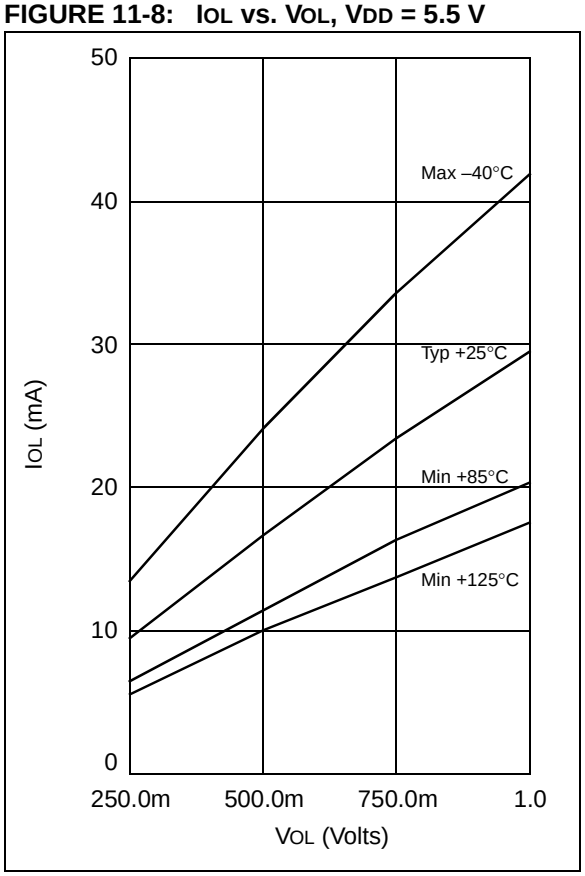

NOTES:

© 1999 Microchip Technology Inc.

11.0 PACKAGING INFORMATION

11.1 Package Marking Information

14-Lead PDIP (300 mil)

```
XXXXXXXXXXXXXX
XXXXXXXXXXXXXX
  AABBCDE
```

Example

```
16C505-04I/P
BUILT 4 SPEED
  9904SAZ
```

14-Lead SOIC (150 mil)

```
XXXXXXXXXX
 AABBCDE
```

Example

```
16C505-04I
 9904SAZ
```

14-Lead Windowed Ceramic (300 mil)

```
 XXX
XXXXXX
```

Example

```
 JW
16C505
```

Legend:	MM...M	Microchip part number information
	XX...X	Customer specific information*
	AA	Year code (last 2 digits of calendar year)
	BB	Week code (week of January 1 is week ‘01’)
	C	Facility code of the plant at which wafer is manufactured O = Outside Vendor C = 5” Line S = 6” Line H = 8” Line
	D	Mask revision number
	E	Assembly code of the plant or country of origin in which part was assembled
Note:	In the event the full Microchip part number cannot be marked on one line, it will be carried over to the next line thus limiting the number of available characters for customer specific information.	

* Standard OTP marking consists of Microchip part number, year code, week code, facility code, mask rev#, and assembly code. For OTP marking beyond this, certain price adders apply. Please check with your Microchip Sales Office. For QTP devices, any special marking adders are included in QTP price.

14-Lead Plastic Dual In-line (P) – 300 mil (PDIP)

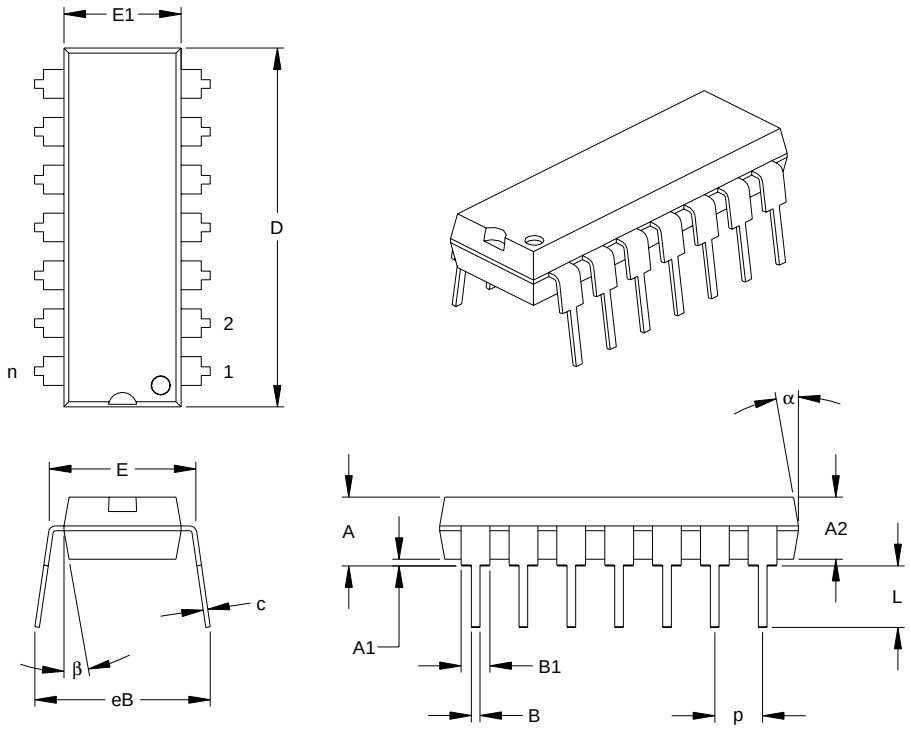

Units		INCHES*			MILLIMETERS		
Dimension Limits		MIN	NOM	MAX	MIN	NOM	MAX
Number of Pins	n		14			14	
Pitch	p		.100			2.54	
Top to Seating Plane	A	.140	.155	.170	3.56	3.94	4.32
Molded Package Thickness	A2	.115	.130	.145	2.92	3.30	3.68
Base to Seating Plane	A1	.015			0.38		
Shoulder to Shoulder Width	E	.300	.313	.325	7.62	7.94	8.26
Molded Package Width	E1	.240	.250	.260	6.10	6.35	6.60
Overall Length	D	.740	.750	.760	18.80	19.05	19.30
Tip to Seating Plane	L	.125	.130	.135	3.18	3.30	3.43
Lead Thickness	c	.008	.012	.015	0.20	0.29	0.38
Upper Lead Width	B1	.045	.058	.070	1.14	1.46	1.78
Lower Lead Width	B	.014	.018	.022	0.36	0.46	0.56
Overall Row Spacing	eB	.310	.370	.430	7.87	9.40	10.92
Mold Draft Angle Top	α	5	10	15	5	10	15
Mold Draft Angle Bottom	β	5	10	15	5	10	15

*Controlling Parameter

Notes:

Dimensions D and E1 do not include mold flash or protrusions. Mold flash or protrusions shall not exceed .010” (0.254mm) per side.

JEDEC Equivalent: MS-001

Drawing No. C04-005

© 1999 Microchip Technology Inc.

14-Lead Plastic Small Outline (SL) – Narrow, 150 mil (SOIC)

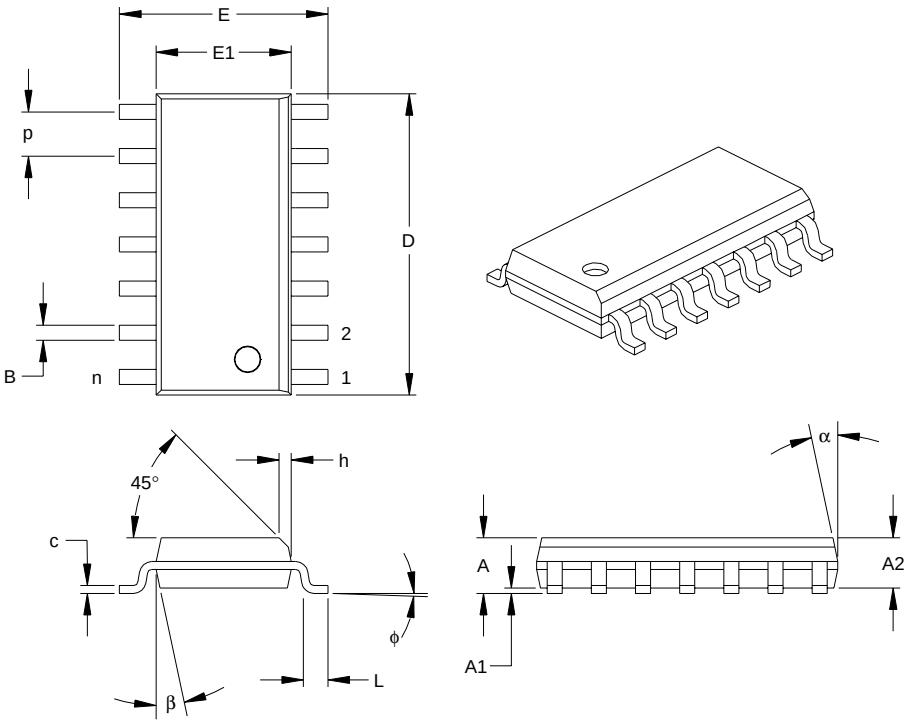

Units		INCHES*			MILLIMETERS		
Dimension Limits		MIN	NOM	MAX	MIN	NOM	MAX
Number of Pins	n		14			14	
Pitch	p		.050			1.27	
Overall Height	A	.053	.061	.069	1.35	1.55	1.75
Molded Package Thickness	A2	.052	.056	.061	1.32	1.42	1.55
Standoff	A1	.004	.007	.010	0.10	0.18	0.25
Overall Width	E	.228	.236	.244	5.79	5.99	6.20
Molded Package Width	E1	.150	.154	.157	3.81	3.90	3.99
Overall Length	D	.337	.342	.347	8.56	8.69	8.81
Chamfer Distance	h	.010	.015	.020	0.25	0.38	0.51
Foot Length	L	.016	.033	.050	0.41	0.84	1.27
Foot Angle	φ	0	4	8	0	4	8
Lead Thickness	c	.008	.009	.010	0.20	0.23	0.25
Lead Width	B	.014	.017	.020	0.36	0.42	0.51
Mold Draft Angle Top	α	0	12	15	0	12	15
Mold Draft Angle Bottom	β	0	12	15	0	12	15

*Controlling Parameter

Notes:

Dimensions D and E1 do not include mold flash or protrusions. Mold flash or protrusions shall not exceed .010” (0.254mm) per side.

JEDEC Equivalent: MS-012

Drawing No. C04-065

14-Lead Ceramic Side Brazed Dual In-line with Window (JW) – 300 mil

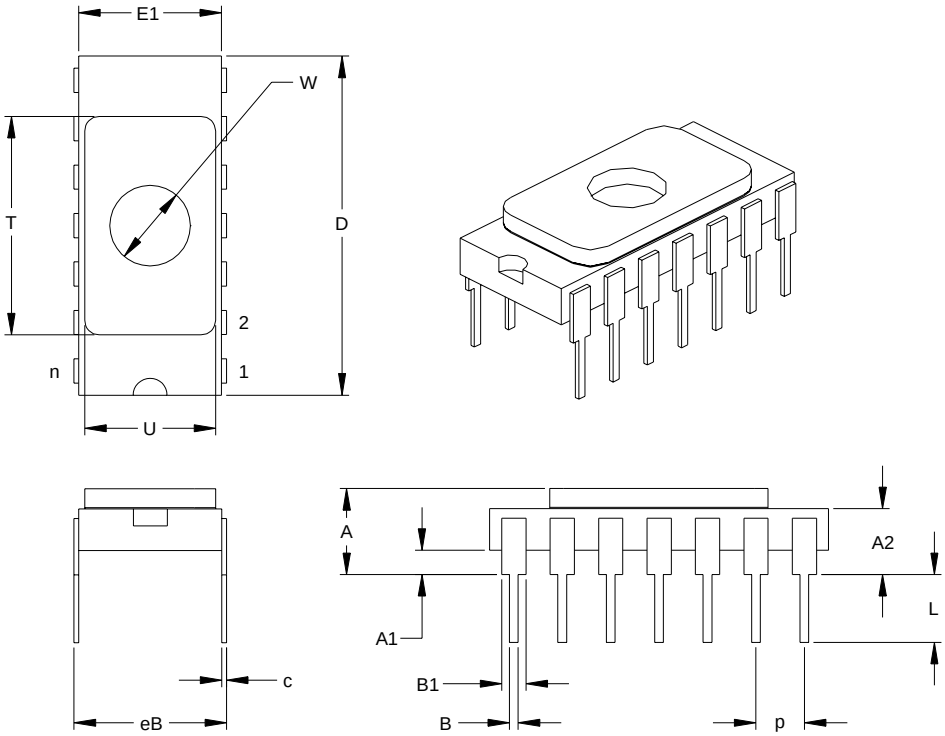

Units		INCHES*			MILLIMETERS		
Dimension Limits		MIN	NOM	MAX	MIN	NOM	MAX
Number of Pins	n		14			14	
Pitch	p		.100			2.54	
Top to Seating Plane	A	.142	.162	.182	3.61	4.11	4.62
Top of Body to Seating Plane	A2	.100	.120	.140	2.54	3.05	3.56
Standoff	A1	.025	.035	.045	0.64	0.89	1.14
Package Width	E1	.280	.290	.300	7.11	7.37	7.62
Overall Length	D	.693	.700	.707	17.60	17.78	17.96
Tip to Seating Plane	L	.130	.140	.150	3.30	3.56	3.81
Lead Thickness	c	.008	.010	.012	0.20	0.25	0.30
Upper Lead Width	B1	.052	.054	.056	1.32	1.37	1.42
Lower Lead Width	B	.016	.018	.020	0.41	0.46	0.51
Overall Row Spacing	eB	.296	.310	.324	7.52	7.87	8.23
Window Diameter	W	.161	.166	.171	4.09	4.22	4.34
Lid Length	T	.440	.450	.460	11.18	11.43	11.68
Lid Width	U	.260	.270	.280	6.60	6.86	7.11

*Controlling Parameter

JEDEC Equivalent: MS-015
Drawing No. C04-107

© 1999 Microchip Technology Inc.

INDEX

A
ALU 7
Applications 3
Architectural Overview 7
Assembler
    MPASM Assembler 51

B
Block Diagram
    On-Chip Reset Circuit 33
    Timer0 23
    TMR0/WDT Prescaler 26
    Watchdog Timer 35
Brown-Out Protection Circuit 36

C
CAL0 bit 16
CAL1 bit 16
CAL2 bit 16
CAL3 bit 16
CALFST bit 16
CALSLW bit 16
Carry 7
Clocking Scheme 10
Code Protection 27, 37
Configuration Bits 27
Configuration Word 27

D
DC and AC Characteristics 71
Development Support 51
Device Varieties 5
Digit Carry 7

E
Errata 2

F
Family of Devices
    PIC16C505 4
FSR 18

I
I/O Interfacing 19
I/O Ports 19
I/O Programming Considerations 20
ID Locations 27, 37
INDF 18
Indirect Data Addressing 18
Instruction Cycle 10
Instruction Flow/Pipelining 10
Instruction Set Summary 40

K
KeeLoq® Evaluation and Programming Tools 54

L
Loading of PC 17

M
Memory Organization 11
    Data Memory 12
    Program Memory 11
MPLAB Integrated Development Environment Software 51

O
OPTION Register 15
OSC selection 27
OSCCAL Register 16
Oscillator Configurations 28
Oscillator Types
    HS 28
    LP 28
    RC 28
    XT 28

P
Package Marking Information 75
Packaging Information 75
PICDEM-1 Low-Cost PICmicro Demo Board 53
PICDEM-2 Low-Cost PIC16CXX Demo Board 53
PICDEM-3 Low-Cost PIC16CXXX Demo Board 53
PICSTART® Plus Entry Level Development System 53
POR
    Device Reset Timer (DRT) 27, 34
    $\overline{\text{PD}}$ 36
    Power-On Reset (POR) 27
    $\overline{\text{TO}}$ 36
PORTB 19
Power-Down Mode 37
Prescaler 26
PRO MATE® II Universal Programmer 53
Program Counter 17

Q
Q cycles 10

R
RC Oscillator 29
Read Modify Write 20
Register File Map 12
Registers
    Special Function 13
Reset 27
Reset on Brown-Out 36

S
SEEVAL® Evaluation and Programming System 54
SLEEP 27, 37
Software Simulator (MPLAB-SIM) 52
Special Features of the CPU 27
Special Function Registers 13
Stack 17
STATUS 7
STATUS Register 14

T
Timer0
    Switching Prescaler Assignment 26
    Timer0 23
    Timer0 (TMR0) Module 23
    TMR0 with External Clock 25
Timing Diagrams and Specifications 66
Timing Parameter Symbology and Load Conditions 65
TRIS Registers 19

W
Wake-up from SLEEP 37
Watchdog Timer (WDT) 27, 34
    Period 35
    Programming Considerations 35
WWW, On-Line Support 2

Z
Zero bit 7

NOTES:

© 1999 Microchip Technology Inc.

ON-LINE SUPPORT

Microchip provides on-line support on the Microchip World Wide Web (WWW) site.

The web site is used by Microchip as a means to make files and information easily available to customers. To view the site, the user must have access to the Internet and a web browser, such as Netscape or Microsoft Explorer. Files are also available for FTP download from our FTP site.

Connecting to the Microchip Internet Web Site

The Microchip web site is available by using your favorite Internet browser to attach to:

www.microchip.com

The file transfer site is available by using an FTP service to connect to:

ftp://ftp.microchip.com

The web site and file transfer site provide a variety of services. Users may download files for the latest Development Tools, Data Sheets, Application Notes, User's Guides, Articles and Sample Programs. A variety of Microchip specific business information is also available, including listings of Microchip sales offices, distributors and factory representatives. Other data available for consideration is:

- Latest Microchip Press Releases
- Technical Support Section with Frequently Asked Questions
- Design Tips
- Device Errata
- Job Postings
- Microchip Consultant Program Member Listing
- Links to other useful web sites related to Microchip Products
- Conferences for products, Development Systems, technical information and more
- Listing of seminars and events

Systems Information and Upgrade Hot Line

The Systems Information and Upgrade Line provides system users a listing of the latest versions of all of Microchip's development systems software products. Plus, this line provides information on how customers can receive any currently available upgrade kits.The Hot Line Numbers are:

1-800-755-2345 for U.S. and most of Canada, and

1-480-786-7302 for the rest of the world.

981103

Trademarks: The Microchip name, logo, PIC, PICmicro, PICSTART, PICMASTER and PRO MATE are registered trademarks of Microchip Technology Incorporated in the U.S.A. and other countries. *Flex*ROM, MPLAB and *fuzzy*-LAB are trademarks and SQTP is a service mark of Microchip in the U.S.A.

All other trademarks mentioned herein are the property of their respective companies.

READER RESPONSE

It is our intention to provide you with the best documentation possible to ensure successful use of your Microchip product. If you wish to provide your comments on organization, clarity, subject matter, and ways in which our documentation can better serve you, please FAX your comments to the Technical Publications Manager at (480) 786-7578.

Please list the following information, and use this outline to provide us with your comments about this Data Sheet.

To: Technical Publications Manager Total Pages Sent

RE: Reader Response

From: Name _____

Company _____

Address _____

City / State / ZIP / Country _____

Telephone: (_____) _____ - _____ FAX: (_____) _____ - _____

Application (optional):

Would you like a reply? ___Y ___N

Device: **PIC16C505** Literature Number: **DS40192C**

Questions:

1. What are the best features of this document?

_____

_____

2. How does this document meet your hardware and software development needs?

_____

_____

3. Do you find the organization of this data sheet easy to follow? If not, why?

_____

_____

4. What additions to the data sheet do you think would enhance the structure and subject?

_____

_____

5. What deletions from the data sheet could be made without affecting the overall usefulness?

_____

_____

6. Is there any incorrect or misleading information (what and where)?

_____

_____

7. How would you improve this document?

_____

_____

8. How would you improve our software, systems, and silicon products?

_____

_____

© 1999 Microchip Technology Inc.

PIC16C505 Product Identification System

PART NO. -XX X /XX XXX

Pattern:	Special Requirements		
Package:	SL	=	150 mil SOIC
	P	=	300 mil PDIP
	JW	=	300 mil Windowed Ceramic Side Brazed
Temperature Range:	-	=	0°C to +70°C
	I	=	-40°C to +85°C
	E	=	-40°C to +125°C
Frequency Range:	04	=	4 MHz (XT, INTRC, EXTRC OSC)
	20	=	20 MHz (HS OSC)
Device	PIC16C505 PIC16LC505 PIC16C505T (Tape & reel for SOIC only) PIC16LC505T (Tape & reel for SOIC only)		

Examples

a) PIC16C505-04/P Commercial Temp., PDIP Package, 4 MHz, normal V_{DD} limits

b) PIC16C505-04I/SL Industrial Temp., SOIC package, 4 MHz, normal V_{DD} limits

c) PIC16C505-04I/P Industrial Temp., PDIP package, 4 MHz, normal V_{DD} limits

Please contact your local sales office for exact ordering procedures.

Sales and Support

Data Sheets
Products supported by a preliminary Data Sheet may have an errata sheet describing minor operational differences and recommended workarounds. To determine if an errata sheet exists for a particular device, please contact one of the following:

1. Your local Microchip sales office
2. The Microchip Corporate Literature Center U.S. FAX: (480) 786-7277
3. The Microchip Worldwide Site (www.microchip.com)

Please specify which device, revision of silicon and Data Sheet (include Literature #) you are using.

New Customer Notification System
Register on our web site (www.microchip.com/cn) to receive the most current information on our products.

Note the following details of the code protection feature on PICmicro® MCUs.

- The PICmicro family meets the specifications contained in the Microchip Data Sheet.
- Microchip believes that its family of PICmicro microcontrollers is one of the most secure products of its kind on the market today, when used in the intended manner and under normal conditions.
- There are dishonest and possibly illegal methods used to breach the code protection feature. All of these methods, to our knowledge, require using the PICmicro microcontroller in a manner outside the operating specifications contained in the data sheet. The person doing so may be engaged in theft of intellectual property.
- Microchip is willing to work with the customer who is concerned about the integrity of their code.
- Neither Microchip nor any other semiconductor manufacturer can guarantee the security of their code. Code protection does not mean that we are guaranteeing the product as “unbreakable”.
- Code protection is constantly evolving. We at Microchip are committed to continuously improving the code protection features of our product.

If you have any further questions about this matter, please contact the local sales office nearest to you.

Information contained in this publication regarding device applications and the like is intended through suggestion only and may be superseded by updates. It is your responsibility to ensure that your application meets with your specifications. No representation or warranty is given and no liability is assumed by Microchip Technology Incorporated with respect to the accuracy or use of such information, or infringement of patents or other intellectual property rights arising from such use or otherwise. Use of Microchip’s products as critical components in life support systems is not authorized except with express written approval by Microchip. No licenses are conveyed, implicitly or otherwise, under any intellectual property rights.

Trademarks

The Microchip name and logo, the Microchip logo, FilterLab, KEELOQ, microID, MPLAB, PIC, PICmicro, PICMASTER, PICSTART, PRO MATE, SEEVAL and The Embedded Control Solutions Company are registered trademarks of Microchip Technology Incorporated in the U.S.A. and other countries.

dsPIC, ECONOMONITOR, FanSense, FlexROM, fuzzyLAB, In-Circuit Serial Programming, ICSP, ICEPIC, microPort, Migratable Memory, MPASM, MPLIB, MPLINK, MPSIM, MXDEV, PICC, PICDEM, PICDEM.net, rfPIC, Select Mode and Total Endurance are trademarks of Microchip Technology Incorporated in the U.S.A.

Serialized Quick Turn Programming (SQTP) is a service mark of Microchip Technology Incorporated in the U.S.A.

All other trademarks mentioned herein are property of their respective companies.

© 2002, Microchip Technology Incorporated, Printed in the U.S.A., All Rights Reserved.

Printed on recycled paper.

DNV Certification, Inc. USA
ANSI • RAB QMS ACCREDITED
DNV MSC The Netherlands Accredited by the RvA
DNV
ISO 9001 / QS-9000 REGISTERED FIRM

Microchip received QS-9000 quality system certification for its worldwide headquarters, design and wafer fabrication facilities in Chandler and Tempe, Arizona in July 1999. The Company’s quality system processes and procedures are QS-9000 compliant for its PICmicro® 8-bit MCUs, KEELOQ® code hopping devices, Serial EEPROMs and microperipheral products. In addition, Microchip’s quality system for the design and manufacture of development systems is ISO 9001 certified.

WORLDWIDE SALES AND SERVICE

AMERICAS

Corporate Office
2355 West Chandler Blvd.
Chandler, AZ 85224-6199
Tel: 480-792-7200 Fax: 480-792-7277
Technical Support: 480-792-7627
Web Address: http://www.microchip.com

Rocky Mountain
2355 West Chandler Blvd.
Chandler, AZ 85224-6199
Tel: 480-792-7966 Fax: 480-792-7456

Atlanta
500 Sugar Mill Road, Suite 200B
Atlanta, GA 30350
Tel: 770-640-0034 Fax: 770-640-0307

Boston
2 Lan Drive, Suite 120
Westford, MA 01886
Tel: 978-692-3848 Fax: 978-692-3821

Chicago
333 Pierce Road, Suite 180
Itasca, IL 60143
Tel: 630-285-0071 Fax: 630-285-0075

Dallas
4570 Westgrove Drive, Suite 160
Addison, TX 75001
Tel: 972-818-7423 Fax: 972-818-2924

Detroit
Tri-Atria Office Building
32255 Northwestern Highway, Suite 190
Farmington Hills, MI 48334
Tel: 248-538-2250 Fax: 248-538-2260

Kokomo
2767 S. Albright Road
Kokomo, Indiana 46902
Tel: 765-864-8360 Fax: 765-864-8387

Los Angeles
18201 Von Karman, Suite 1090
Irvine, CA 92612
Tel: 949-263-1888 Fax: 949-263-1338

New York
150 Motor Parkway, Suite 202
Hauppauge, NY 11788
Tel: 631-273-5305 Fax: 631-273-5335

San Jose
Microchip Technology Inc.
2107 North First Street, Suite 590
San Jose, CA 95131
Tel: 408-436-7950 Fax: 408-436-7955

Toronto
6285 Northam Drive, Suite 108
Mississauga, Ontario L4V 1X5, Canada
Tel: 905-673-0699 Fax: 905-673-6509

ASIA/PACIFIC

Australia
Microchip Technology Australia Pty Ltd
Suite 22, 41 Rawson Street
Epping 2121, NSW
Australia
Tel: 61-2-9868-6733 Fax: 61-2-9868-6755

China - Beijing
Microchip Technology Consulting (Shanghai) Co., Ltd., Beijing Liaison Office
Unit 915
Bei Hai Wan Tai Bldg.
No. 6 Chaoyangmen Beidajie
Beijing, 100027, No. China
Tel: 86-10-85282100 Fax: 86-10-85282104

China - Chengdu
Microchip Technology Consulting (Shanghai) Co., Ltd., Chengdu Liaison Office
Rm. 2401, 24th Floor,
Ming Xing Financial Tower
No. 88 TIDU Street
Chengdu 610016, China
Tel: 86-28-6766200 Fax: 86-28-6766599

China - Fuzhou
Microchip Technology Consulting (Shanghai) Co., Ltd., Fuzhou Liaison Office
Unit 28F, World Trade Plaza
No. 71 Wusi Road
Fuzhou 350001, China
Tel: 86-591-7503506 Fax: 86-591-7503521

China - Shanghai
Microchip Technology Consulting (Shanghai) Co., Ltd.
Room 701, Bldg. B
Far East International Plaza
No. 317 Xian Xia Road
Shanghai, 200051
Tel: 86-21-6275-5700 Fax: 86-21-6275-5060

China - Shenzhen
Microchip Technology Consulting (Shanghai) Co., Ltd., Shenzhen Liaison Office
Rm. 1315, 13/F, Shenzhen Kerry Centre,
Renminnan Lu
Shenzhen 518001, China
Tel: 86-755-2350361 Fax: 86-755-2366086

Hong Kong
Microchip Technology Hongkong Ltd.
Unit 901-6, Tower 2, Metroplaza
223 Hing Fong Road
Kwai Fong, N.T., Hong Kong
Tel: 852-2401-1200 Fax: 852-2401-3431

India
Microchip Technology Inc.
India Liaison Office
Divyasree Chambers
1 Floor, Wing A (A3/A4)
No. 11, O'Shaugnessey Road
Bangalore, 560 025, India
Tel: 91-80-2290061 Fax: 91-80-2290062

Japan
Microchip Technology Japan K.K.
Benex S-1 6F
3-18-20, Shinyokohama
Kohoku-Ku, Yokohama-shi
Kanagawa, 222-0033, Japan
Tel: 81-45-471- 6166 Fax: 81-45-471-6122

Korea
Microchip Technology Korea
168-1, Youngbo Bldg. 3 Floor
Samsung-Dong, Kangnam-Ku
Seoul, Korea 135-882
Tel: 82-2-554-7200 Fax: 82-2-558-5934

Singapore
Microchip Technology Singapore Pte Ltd.
200 Middle Road
#07-02 Prime Centre
Singapore, 188980
Tel: 65-334-8870 Fax: 65-334-8850

Taiwan
Microchip Technology Taiwan
11F-3, No. 207
Tung Hua North Road
Taipei, 105, Taiwan
Tel: 886-2-2717-7175 Fax: 886-2-2545-0139

EUROPE

Denmark
Microchip Technology Nordic ApS
Regus Business Centre
Lautrup hoj 1-3
Ballerup DK-2750 Denmark
Tel: 45 4420 9895 Fax: 45 4420 9910

France
Microchip Technology SARL
Parc d'Activite du Moulin de Massy
43 Rue du Saule Trapu
Batiment A - ler Etage
91300 Massy, France
Tel: 33-1-69-53-63-20 Fax: 33-1-69-30-90-79

Germany
Microchip Technology GmbH
Gustav-Heinemann Ring 125
D-81739 Munich, Germany
Tel: 49-89-627-144 0 Fax: 49-89-627-144-44

Italy
Microchip Technology SRL
Centro Direzionale Colleoni
Palazzo Taurus 1 V. Le Colleoni 1
20041 Agrate Brianza
Milan, Italy
Tel: 39-039-65791-1 Fax: 39-039-6899883

United Kingdom
Arizona Microchip Technology Ltd.
505 Eskdale Road
Winnersh Triangle
Wokingham
Berkshire, England RG41 5TU
Tel: 44 118 921 5869 Fax: 44-118 921-5820

01/18/02

© 2002 Microchip Technology Inc.