PIC12C5XX

8-Pin, 8-Bit CMOS Microcontrollers

Devices included in this Data Sheet:

- PIC12C508 • PIC12C508A • PIC12CE518
- PIC12C509 • PIC12C509A • PIC12CE519
- PIC12CR509A

Note: Throughout this data sheet PIC12C5XX refers to the PIC12C508, PIC12C509, PIC12C508A, PIC12C509A, PIC12CR509A, PIC12CE518 and PIC12CE519. PIC12CE5XX refers to PIC12CE518 and PIC12CE519.

High-Performance RISC CPU:

- Only 33 single word instructions to learn
- All instructions are single cycle (1 µs) except for program branches which are two-cycle
- Operating speed: DC - 4 MHz clock input
  DC - 1 µs instruction cycle

Device	Memory			
	EPROM Program	ROM Program	RAM Data	EEPROM Data
PIC12C508	512 x 12		25	
PIC12C508A	512 x 12		25	
PIC12C509	1024 x 12		41	
PIC12C509A	1024 x 12		41	
PIC12CE518	512 x 12		25	16
PIC12CE519	1024 x 12		41	16
PIC12CR509A		1024 x 12	41	

- 12-bit wide instructions
- 8-bit wide data path
- Seven special function hardware registers
- Two-level deep hardware stack
- Direct, indirect and relative addressing modes for data and instructions
- Internal 4 MHz RC oscillator with programmable calibration
- In-circuit serial programming

Peripheral Features:

- 8-bit real time clock/counter (TMR0) with 8-bit programmable prescaler
- Power-On Reset (POR)
- Device Reset Timer (DRT)
- Watchdog Timer (WDT) with its own on-chip RC oscillator for reliable operation
- Programmable code-protection
- 1,000,000 erase/write cycle EEPROM data memory
- EEPROM data retention > 40 years
- Power saving SLEEP mode
- Wake-up from SLEEP on pin change
- Internal weak pull-ups on I/O pins
- Internal pull-up on $\overline{MCLR}$ pin
- Selectable oscillator options:
  - INTRC: Internal 4 MHz RC oscillator
  - EXTRC: External low-cost RC oscillator
  - XT: Standard crystal/resonator
  - LP: Power saving, low frequency crystal

CMOS Technology:

- Low power, high speed CMOS EPROM/ROM technology
- Fully static design
- Wide operating voltage range
- Wide temperature range:
  - Commercial: 0°C to +70°C
  - Industrial: -40°C to +85°C
  - Extended: -40°C to +125°C
- Low power consumption
  - < 2 mA @ 5V, 4 MHz
  - 15 µA typical @ 3V, 32 KHz
  - < 1 µA typical standby current

© 1999 Microchip Technology Inc.

Pin Diagram - PIC12C508/509

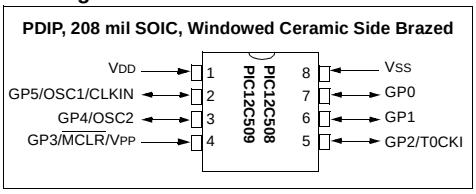

Pin Diagram - PIC12C508A/509A, PIC12CE518/519

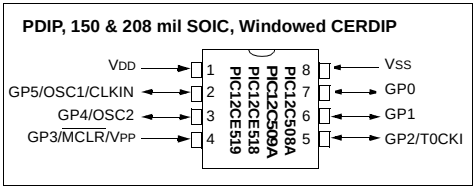

Pin Diagram - PIC12CR509A

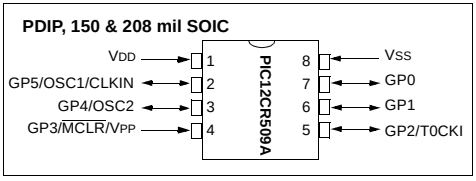

Device Differences

Device	Voltage Range	Oscillator	Oscillator Calibration[2] (Bits)	Process Technology (Microns)
PIC12C508A	3.0-5.5	See Note 1	6	0.7
PIC12LC508A	2.5-5.5	See Note 1	6	0.7
PIC12C508	2.5-5.5	See Note 1	4	0.9
PIC12C509A	3.0-5.5	See Note 1	6	0.7
PIC12LC509A	2.5-5.5	See Note 1	6	0.7
PIC12C509	2.5-5.5	See Note 1	4	0.9
PIC12CR509A	2.5-5.5	See Note 1	6	0.7
PIC12CE518	3.0-5.5	-	6	0.7
PIC12LCE518	2.5-5.5	-	6	0.7
PIC12CE519	3.0-5.5	-	6	0.7
PIC12LCE519	2.5-5.5	-	6	0.7

Note 1: If you change from the PIC12C50X to the PIC12C50XA or to the PIC12CR50XA, please verify oscillator characteristics in your application.

Note 2: See Section 7.2.5 for OSCCAL implementation differences.

© 1999 Microchip Technology Inc.

TABLE OF CONTENTS

1.0 General Description 4
2.0 PIC12C5XX Device Varieties 7
3.0 Architectural Overview 9
4.0 Memory Organization 13
5.0 I/O Port 21
6.0 Timer0 Module and TMR0 Register 25
7.0 EEPROM Peripheral Operation 29
8.0 Special Features of the CPU 35
9.0 Instruction Set Summary 47
10.0 Development Support 59
11.0 Electrical Characteristics - PIC12C508/PIC12C509 65
12.0 DC and AC Characteristics - PIC12C508/PIC12C509 75
13.0 Electrical Characteristics PIC12C508A/PIC12C509A/PIC12LC508A/PIC12LC509A/PIC12CR509A/ PIC12CE518/PIC12CE519/ PIC12LCE518/PIC12LCE519/PIC12LCR509A 79
14.0 DC and AC Characteristics PIC12C508A/PIC12C509A/PIC12LC508A/PIC12LC509A/PIC12CE518/PIC12CE519/PIC12CR509A/ PIC12LCE518/PIC12LCE519/ PIC12LCR509A 93
15.0 Packaging Information 99
Index 105
PIC12C5XX Product Identification System 109
Sales and Support: 109

To Our Valued Customers

Most Current Data Sheet

To obtain the most up-to-date version of this data sheet, please register at our Worldwide Web site at:

http://www.microchip.com

You can determine the version of a data sheet by examining its literature number found on the bottom outside corner of any page. The last character of the literature number is the version number. e.g., DS30000A is version A of document DS30000.

Errata

An errata sheet may exist for current devices, describing minor operational differences (from the data sheet) and recommended workarounds. As device/documentation issues become known to us, we will publish an errata sheet. The errata will specify the revision of silicon and revision of document to which it applies.

To determine if an errata sheet exists for a particular device, please check with one of the following:

- Microchip's Worldwide Web site; http://www.microchip.com
- Your local Microchip sales office (see last page)
- The Microchip Corporate Literature Center; U.S. FAX: (602) 786-7277

When contacting a sales office or the literature center, please specify which device, revision of silicon and data sheet (include literature number) you are using.

Corrections to this Data Sheet

We constantly strive to improve the quality of all our products and documentation. We have spent a great deal of time to ensure that this document is correct. However, we realize that we may have missed a few things. If you find any information that is missing or appears in error, please:

- Fill out and mail in the reader response form in the back of this data sheet.
- E-mail us at webmaster@microchip.com.

We appreciate your assistance in making this a better document.

1.0 GENERAL DESCRIPTION

The PIC12C5XX from Microchip Technology is a family of low-cost, high performance, 8-bit, fully static, EEPROM/EPROM/ROM-based CMOS microcontrollers. It employs a RISC architecture with only 33 single word/single cycle instructions. All instructions are single cycle (1 µs) except for program branches which take two cycles. The PIC12C5XX delivers performance an order of magnitude higher than its competitors in the same price category. The 12-bit wide instructions are highly symmetrical resulting in 2:1 code compression over other 8-bit microcontrollers in its class. The easy to use and easy to remember instruction set reduces development time significantly.

The PIC12C5XX products are equipped with special features that reduce system cost and power requirements. The Power-On Reset (POR) and Device Reset Timer (DRT) eliminate the need for external reset circuitry. There are four oscillator configurations to choose from, including INTRC internal oscillator mode and the power-saving LP (Low Power) oscillator mode. Power saving SLEEP mode, Watchdog Timer and code protection features also improve system cost, power and reliability.

The PIC12C5XX are available in the cost-effective One-Time-Programmable (OTP) versions which are suitable for production in any volume. The customer can take full advantage of Microchip's price leadership in OTP microcontrollers while benefiting from the OTP's flexibility.

The PIC12C5XX products are supported by a full-featured macro assembler, a software simulator, an in-circuit emulator, a 'C' compiler, fuzzy logic support tools, a low-cost development programmer, and a full featured programmer. All the tools are supported on IBM® PC and compatible machines.

1.1 Applications

The PIC12C5XX series fits perfectly in applications ranging from personal care appliances and security systems to low-power remote transmitters/receivers. The EPROM technology makes customizing application programs (transmitter codes, appliance settings, receiver frequencies, etc.) extremely fast and convenient, while the EEPROM data memory technology allows for the changing of calibration factors and security codes. The small footprint packages, for through hole or surface mounting, make this microcontroller series perfect for applications with space limitations. Low-cost, low-power, high performance, ease of use and I/O flexibility make the PIC12C5XX series very versatile even in areas where no microcontroller use has been considered before (e.g., timer functions, replacement of "glue" logic and PLD's in larger systems, coprocessor applications).

© 1999 Microchip Technology Inc.

TABLE 1-1: PIC12CXXX & PIC12CEXXX FAMILY OF DEVICES

		PIC12C508(A)	PIC12C509(A)	PIC12CR509A	PIC12CE518	PIC12CE519	PIC12C671	PIC12C672	PIC12CE673	PIC12CE674
Clock	Maximum Frequency of Operation (MHz)	4	4	4	4	4	10	10	10	10
Memory	EPROM Program Memory	512 x 12	1024 x 12	1024 x 12 (ROM)	512 x 12	1024 x 12	1024 x 14	2048 x 14	1024 x 14	2048 x 14
	RAM Data Memory (bytes)	25	41	41	25	41	128	128	128	128
Peripherals	EEPROM Data Memory (bytes)	—	—	—	16	16	—	—	16	16
	Timer Module(s)	TMR0	TMR0	TMR0	TMR0	TMR0	TMR0	TMR0	TMR0	TMR0
	A/D Converter (8-bit) Channels	—	—	—	—	—	4	4	4	4
Features	Wake-up from SLEEP on pin change	Yes	Yes	Yes	Yes	Yes	Yes	Yes	Yes	Yes
	Interrupt Sources	—	—	—			4	4	4	4
	I/O Pins	5	5	5	5	5	5	5	5	5
	Input Pins	1	1	1	1	1	1	1	1	1
	Internal Pull-ups	Yes	Yes	Yes	Yes	Yes	Yes	Yes	Yes	Yes
	In-Circuit Serial Programming	Yes	Yes	—	Yes	Yes	Yes	Yes	Yes	Yes
	Number of Instructions	33	33	33	33	33	35	35	35	35
	Packages	8-pin DIP, JW, SOIC	8-pin DIP, JW, SOIC	8-pin DIP, SOIC	8-pin DIP, JW, SOIC	8-pin DIP, JW, SOIC	8-pin DIP, JW, SOIC	8-pin DIP, JW, SOIC	8-pin DIP, JW	8-pin DIP, JW

All PIC12CXXX & PIC12CEXXX devices have Power-on Reset, selectable Watchdog Timer, selectable code protect and high I/O current capability.
All PIC12CXXX & PIC12CEXXX devices use serial programming with data pin GP0 and clock pin GP1.

NOTES:

© 1999 Microchip Technology Inc.

2.0 PIC12C5XX DEVICE VARIETIES

A variety of packaging options are available. Depending on application and production requirements, the proper device option can be selected using the information in this section. When placing orders, please use the PIC12C5XX Product Identification System at the back of this data sheet to specify the correct part number.

2.1 UV Erasable Devices

The UV erasable version, offered in ceramic side brazed package, is optimal for prototype development and pilot programs.

The UV erasable version can be erased and reprogrammed to any of the configuration modes.

Note:	Please note that erasing the device will also erase the pre-programmed internal calibration value for the internal oscillator. The calibration value must be saved prior to erasing the part.

Microchip's PICSTART® PLUS and PRO MATE® programmers all support programming of the PIC12C5XX. Third party programmers also are available; refer to the *Microchip Third Party Guide* for a list of sources.

2.2 One-Time-Programmable (OTP) Devices

The availability of OTP devices is especially useful for customers who need the flexibility for frequent code updates or small volume applications.

The OTP devices, packaged in plastic packages permit the user to program them once. In addition to the program memory, the configuration bits must also be programmed.

2.3 Quick-Turnaround-Production (QTP) Devices

Microchip offers a QTP Programming Service for factory production orders. This service is made available for users who choose not to program a medium to high quantity of units and whose code patterns have stabilized. The devices are identical to the OTP devices but with all EPROM locations and fuse options already programmed by the factory. Certain code and prototype verification procedures do apply before production shipments are available. Please contact your local Microchip Technology sales office for more details.

2.4 Serialized Quick-Turnaround Production (SQTP℠) Devices

Microchip offers a unique programming service where a few user-defined locations in each device are programmed with different serial numbers. The serial numbers may be random, pseudo-random or sequential.

Serial programming allows each device to have a unique number which can serve as an entry-code, password or ID number.

2.5 Read Only Memory (ROM) Device

Microchip offers masked ROM to give the customer a low cost option for high volume, mature products.

NOTES:

© 1999 Microchip Technology Inc.

3.0 ARCHITECTURAL OVERVIEW

The high performance of the PIC12C5XX family can be attributed to a number of architectural features commonly found in RISC microprocessors. To begin with, the PIC12C5XX uses a Harvard architecture in which program and data are accessed on separate buses. This improves bandwidth over traditional von Neumann architecture where program and data are fetched on the same bus. Separating program and data memory further allows instructions to be sized differently than the 8-bit wide data word. Instruction opcodes are 12-bits wide making it possible to have all single word instructions. A 12-bit wide program memory access bus fetches a 12-bit instruction in a single cycle. A two-stage pipeline overlaps fetch and execution of instructions. Consequently, all instructions (33) execute in a single cycle (1µs @ 4MHz) except for program branches.

The table below lists program memory (EPROM), data memory (RAM), ROM memory, and non-volatile (EEPROM) for each device.

Device	Memory			
	EPROM Program	ROM Program	RAM Data	EEPROM Data
PIC12C508	512 x 12		25	
PIC12C509	1024 x 12		41	
PIC12C508A	512 x 12		25	
PIC12C509A	1024 x 12		41	
PIC12CR509A		1024 x 12	41	
PIC12CE518	512 x 12		25 x 8	16 x 8
PIC12CE519	1024 x 12		41 x 8	16 x 8

The PIC12C5XX can directly or indirectly address its register files and data memory. All special function registers including the program counter are mapped in the data memory. The PIC12C5XX has a highly orthogonal (symmetrical) instruction set that makes it possible to carry out any operation on any register using any addressing mode. This symmetrical nature and lack of ‘special optimal situations’ make programming with the PIC12C5XX simple yet efficient. In addition, the learning curve is reduced significantly.

The PIC12C5XX device contains an 8-bit ALU and working register. The ALU is a general purpose arithmetic unit. It performs arithmetic and Boolean functions between data in the working register and any register file.

The ALU is 8-bits wide and capable of addition, subtraction, shift and logical operations. Unless otherwise mentioned, arithmetic operations are two's complement in nature. In two-operand instructions, typically one operand is the W (working) register. The other operand is either a file register or an immediate constant. In single operand instructions, the operand is either the W register or a file register.

The W register is an 8-bit working register used for ALU operations. It is not an addressable register.

Depending on the instruction executed, the ALU may affect the values of the Carry (C), Digit Carry (DC), and Zero (Z) bits in the STATUS register. The C and DC bits operate as a $\overline{\text{borrow}}$ and $\overline{\text{digit borrow}}$ out bit, respectively, in subtraction. See the `SUBWF` and `ADDWF` instructions for examples.

A simplified block diagram is shown in Figure 3-1, with the corresponding device pins described in Table 3-1.

FIGURE 3-1: PIC12C5XX BLOCK DIAGRAM

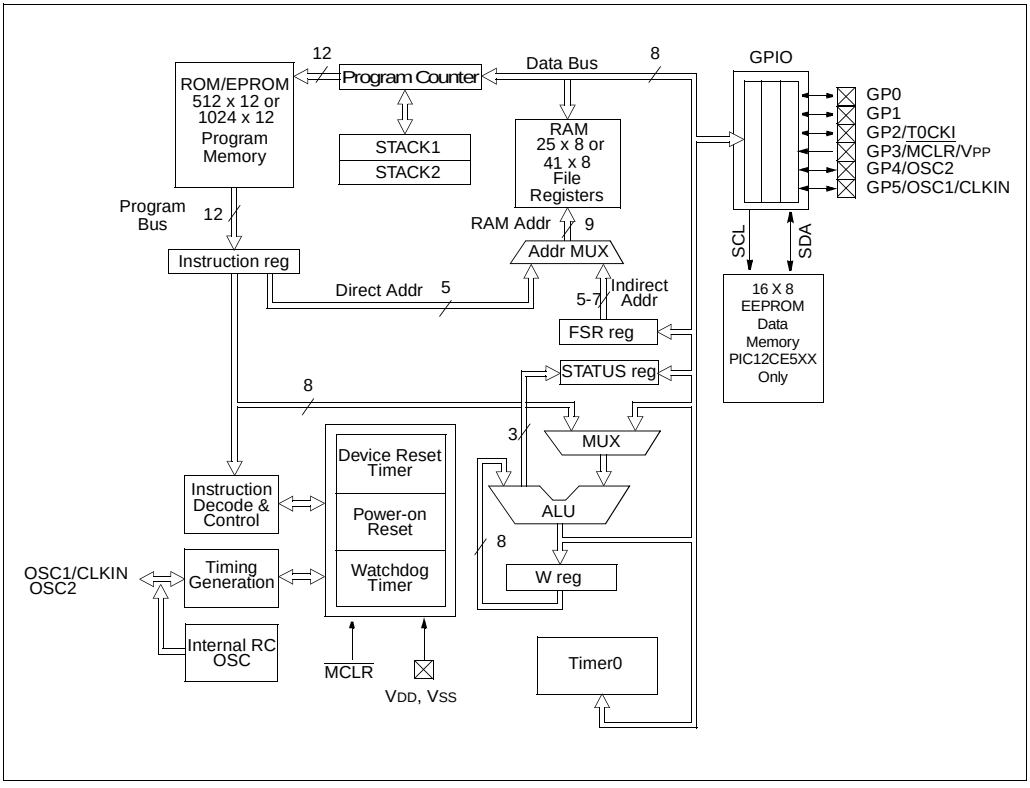

© 1999 Microchip Technology Inc.

TABLE 3-1: PIC12C5XX PINOUT DESCRIPTION

Name	DIP Pin #	SOIC Pin #	I/O/P Type	Buffer Type	Description
GP0	7	7	I/O	TTL/ST	Bi-directional I/O port/ serial programming data. Can be software programmed for internal weak pull-up and wake-up from SLEEP on pin change. This buffer is a Schmitt Trigger input when used in serial programming mode.
GP1	6	6	I/O	TTL/ST	Bi-directional I/O port/ serial programming clock. Can be software programmed for internal weak pull-up and wake-up from SLEEP on pin change. This buffer is a Schmitt Trigger input when used in serial programming mode.
GP2/T0CKI	5	5	I/O	ST	Bi-directional I/O port. Can be configured as T0CKI.
GP3/$\overline{\text{MCLR}}$/VPP	4	4	I	TTL/ST	Input port/master clear (reset) input/programming voltage input. When configured as $\overline{\text{MCLR}}$, this pin is an active low reset to the device. Voltage on $\overline{\text{MCLR}}$/VPP must not exceed VDD during normal device operation or the device will enter programming mode. Can be software programmed for internal weak pull-up and wake-up from SLEEP on pin change. Weak pull-up always on if configured as $\overline{\text{MCLR}}$. ST when in $\overline{\text{MCLR}}$ mode.
GP4/OSC2	3	3	I/O	TTL	Bi-directional I/O port/oscillator crystal output. Connections to crystal or resonator in crystal oscillator mode (XT and LP modes only, GPIO in other modes).
GP5/OSC1/CLKIN	2	2	I/O	TTL/ST	Bidirectional IO port/oscillator crystal input/external clock source input (GPIO in Internal RC mode only, OSC1 in all other oscillator modes). TTL input when GPIO, ST input in external RC oscillator mode.
VDD	1	1	P	—	Positive supply for logic and I/O pins
VSS	8	8	P	—	Ground reference for logic and I/O pins

Legend: I = input, O = output, I/O = input/output, P = power, — = not used, TTL = TTL input, ST = Schmitt Trigger input

3.1 Clocking Scheme/Instruction Cycle

The clock input (OSC1/CLKIN pin) is internally divided by four to generate four non-overlapping quadrature clocks namely Q1, Q2, Q3 and Q4. Internally, the program counter is incremented every Q1, and the instruction is fetched from program memory and latched into instruction register in Q4. It is decoded and executed during the following Q1 through Q4. The clocks and instruction execution flow is shown in Figure 3-2 and Example 3-1.

3.2 Instruction Flow/Pipelining

An Instruction Cycle consists of four Q cycles (Q1, Q2, Q3 and Q4). The instruction fetch and execute are pipelined such that fetch takes one instruction cycle while decode and execute takes another instruction cycle. However, due to the pipelining, each instruction effectively executes in one cycle. If an instruction causes the program counter to change (e.g., `GOTO`) then two cycles are required to complete the instruction (Example 3-1).

A fetch cycle begins with the program counter (PC) incrementing in Q1.

In the execution cycle, the fetched instruction is latched into the Instruction Register (IR) in cycle Q1. This instruction is then decoded and executed during the Q2, Q3, and Q4 cycles. Data memory is read during Q2 (operand read) and written during Q4 (destination write).

FIGURE 3-2: CLOCK/INSTRUCTION CYCLE

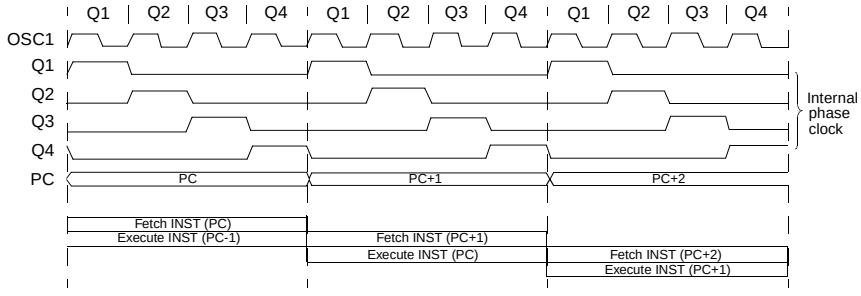

EXAMPLE 3-1: INSTRUCTION PIPELINE FLOW

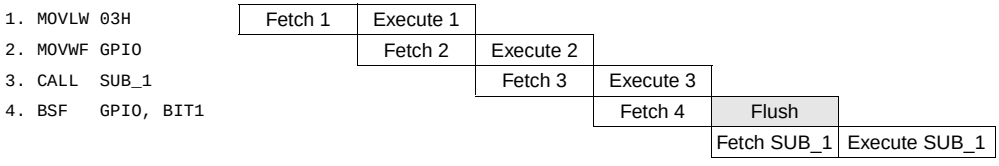

All instructions are single cycle, except for any program branches. These take two cycles since the fetch instruction is “flushed” from the pipeline while the new instruction is being fetched and then executed.

© 1999 Microchip Technology Inc.

4.0 MEMORY ORGANIZATION

PIC12C5XX memory is organized into program memory and data memory. For devices with more than 512 bytes of program memory, a paging scheme is used. Program memory pages are accessed using one STATUS register bit. For the PIC12C509, PIC12C509A, PICCR509A and PIC12CE519 with a data memory register file of more than 32 registers, a banking scheme is used. Data memory banks are accessed using the File Select Register (FSR).

4.1 Program Memory Organization

The PIC12C5XX devices have a 12-bit Program Counter (PC) capable of addressing a 2K x 12 program memory space.

Only the first 512 x 12 (0000h-01FFh) for the PIC12C508, PIC12C508A and PIC12CE518 and 1K x 12 (0000h-03FFh) for the PIC12C509, PIC12C509A, PIC12CR509A, and PIC12CE519 are physically implemented. Refer to Figure 4-1. Accessing a location above these boundaries will cause a wrap-around within the first 512 x 12 space (PIC12C508, PIC12C508A and PIC12CE518) or 1K x 12 space (PIC12C509, PIC12C509A, PIC12CR509A and PIC12CE519). The effective reset vector is at 000h, (see Figure 4-1). Location 01FFh (PIC12C508, PIC12C508A and PIC12CE518) or location 03FFh (PIC12C509, PIC12C509A, PIC12CR509A and PIC12CE519) contains the internal clock oscillator calibration value. This value should never be overwritten.

FIGURE 4-1: PROGRAM MEMORY MAP AND STACK

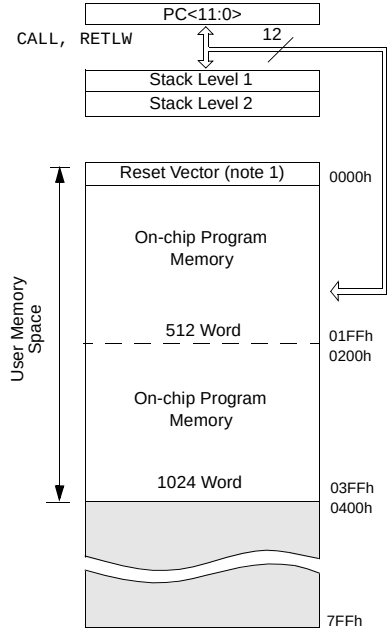

Note 1: Address 0000h becomes the effective reset vector. Location 01FFh (PIC12C508, PIC12C508A, PIC12CE518) or location 03FFh (PIC12C509, PIC12C509A, PIC12CR509A, PIC12CE519) contains the `MOVLW XX` INTERNAL RC oscillator calibration value.

4.2 Data Memory Organization

Data memory is composed of registers, or bytes of RAM. Therefore, data memory for a device is specified by its register file. The register file is divided into two functional groups: special function registers and general purpose registers.

The special function registers include the TMR0 register, the Program Counter (PC), the Status Register, the I/O registers (ports), and the File Select Register (FSR). In addition, special purpose registers are used to control the I/O port configuration and prescaler options.

The general purpose registers are used for data and control information under command of the instructions.

For the PIC12C508, PIC12C508A and PIC12CE518, the register file is composed of 7 special function registers and 25 general purpose registers (Figure 4-2).

For the PIC12C509, PIC12C509A, PIC12CR509A, and PIC12CE519 the register file is composed of 7 special function registers, 25 general purpose registers, and 16 general purpose registers that may be addressed using a banking scheme (Figure 4-3).

4.2.1 GENERAL PURPOSE REGISTER FILE

The general purpose register file is accessed either directly or indirectly through the file select register FSR (Section 4.8).

FIGURE 4-2: PIC12C508, PIC12C508A AND PIC12CE518 REGISTER FILE MAP

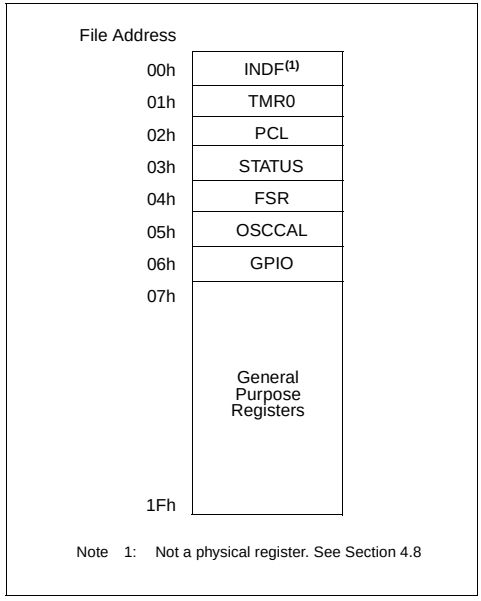

FIGURE 4-3: PIC12C509, PIC12C509A, PIC12CR509A AND PIC12CE519 REGISTER FILE MAP

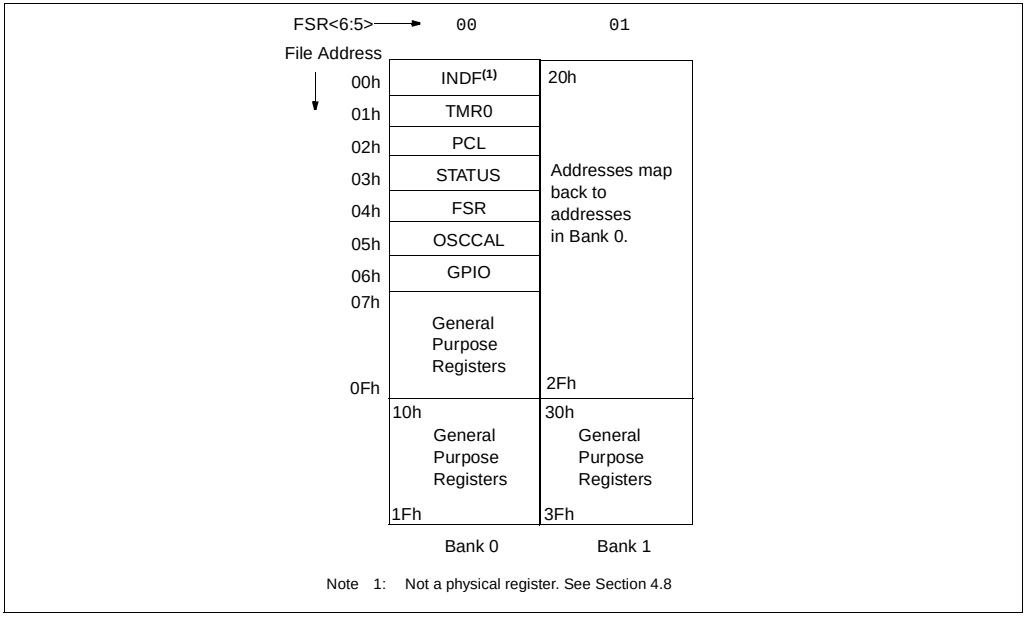

© 1999 Microchip Technology Inc.

4.2.2 SPECIAL FUNCTION REGISTERS

The Special Function Registers (SFRs) are registers used by the CPU and peripheral functions to control the operation of the device (Table 4-1).

The special registers can be classified into two sets. The special function registers associated with the “core” functions are described in this section. Those related to the operation of the peripheral features are described in the section for each peripheral feature.

TABLE 4-1: SPECIAL FUNCTION REGISTER (SFR) SUMMARY

Address	Name	Bit 7	Bit 6	Bit 5	Bit 4	Bit 3	Bit 2	Bit 1	Bit 0	Value on Power-On Reset	Value on All Other Resets(2)
N/A	TRIS	—	—							--11 1111	--11 1111
N/A	OPTION	Contains control bits to configure Timer0, Timer0/WDT prescaler, wake-up on change, and weak pull-ups								1111 1111	1111 1111
00h	INDF	Uses contents of FSR to address data memory (not a physical register)								xxxx xxxx	uuuu uuuu
01h	TMR0	8-bit real-time clock/counter								xxxx xxxx	uuuu uuuu
02h(1)	PCL	Low order 8 bits of PC								1111 1111	1111 1111
03h	STATUS	GPWUF	—	PA0	$\overline{TO}$	$\overline{PD}$	Z	DC	C	0001 1xxx	q00q quuu(3)
04h	FSR (PIC12C508/ PIC12C508A/ PIC12C518)	Indirect data memory address pointer								111x xxxx	111u uuuu
04h	FSR (PIC12C509/ PIC12C509A/ PIC12CR509A/ PIC12CE519)	Indirect data memory address pointer								110x xxxx	11uu uuuu
05h	OSCCAL (PIC12C508/ PIC12C509)	CAL3	CAL2	CAL1	CAL0	—	—	—	—	0111 ----	uuuu ----
05h	OSCCAL (PIC12C508A/ PIC12C509A/ PIC12CE518/ PIC12CE519/ PIC12CR509A)	CAL5	CAL4	CAL3	CAL2	CAL1	CAL0	—	—	1000 00--	uuuu uu--
06h	GPIO (PIC12C508/ PIC12C509/ PIC12C508A/ PIC12C509A/ PIC12CR509A)	—	—	GP5	GP4	GP3	GP2	GP1	GP0	--xx xxxx	--uu uuuu
06h	GPIO (PIC12CE518/ PIC12CE519)	SCL	SDA	GP5	GP4	GP3	GP2	GP1	GP0	11xx xxxx	11uu uuuu

Legend: Shaded boxes = unimplemented or unused, – = unimplemented, read as ’0’ (if applicable)
x = unknown, u = unchanged, q = see the tables in Section 8.7 for possible values.

Note 1: The upper byte of the Program Counter is not directly accessible. See Section 4.6 for an explanation of how to access these bits.

2: Other (non power-up) resets include external reset through $\overline{MCLR}$, watchdog timer and wake-up on pin change reset.

3: If reset was due to wake-up on pin change then bit 7 = 1. All other resets will cause bit 7 = 0.

4.3 STATUS Register

This register contains the arithmetic status of the ALU, the RESET status, and the page preselect bit for program memories larger than 512 words.

The STATUS register can be the destination for any instruction, as with any other register. If the STATUS register is the destination for an instruction that affects the Z, DC or C bits, then the write to these three bits is disabled. These bits are set or cleared according to the device logic. Furthermore, the $\overline{TO}$ and $\overline{PD}$ bits are not writable. Therefore, the result of an instruction with the STATUS register as destination may be different than intended.

For example, `CLRF STATUS` will clear the upper three bits and set the Z bit. This leaves the STATUS register as `000u u1uu` (where u = unchanged).

It is recommended, therefore, that only `BCF`, `BSF` and `MOVWF` instructions be used to alter the STATUS register because these instructions do not affect the Z, DC or C bits from the STATUS register. For other instructions, which do affect STATUS bits, see Instruction Set Summary.

FIGURE 4-4: STATUS REGISTER (ADDRESS:03h)

R/W-0	R/W-0	R/W-0	R-1	R-1	R/W-x	R/W-x	R/W-x
GPWUF	—	PA0	$\overline{TO}$	$\overline{PD}$	Z	DC	C
bit7	6	5	4	3	2	1	bit0

R = Readable bit
W = Writable bit
- n = Value at POR reset

bit 7: **GPWUF**: GPIO reset bit
1 = Reset due to wake-up from SLEEP on pin change
0 = After power up or other reset

bit 6: **Unimplemented**

bit 5: **PA0**: Program page preselect bits
1 = Page 1 (200h - 3FFh) - PIC12C509, PIC12C509A, PIC12CR509A and PIC12CE519
0 = Page 0 (000h - 1FFh) - PIC12C5XX
Each page is 512 bytes.
Using the PA0 bit as a general purpose read/write bit in devices which do not use it for program page preselect is not recommended since this may affect upward compatibility with future products.

bit 4: **$\overline{TO}$**: Time-out bit
1 = After power-up, `CLRWDT` instruction, or `SLEEP` instruction
0 = A WDT time-out occurred

bit 3: **$\overline{PD}$**: Power-down bit
1 = After power-up or by the `CLRWDT` instruction
0 = By execution of the `SLEEP` instruction

bit 2: **Z**: Zero bit
1 = The result of an arithmetic or logic operation is zero
0 = The result of an arithmetic or logic operation is not zero

bit 1: **DC**: Digit carry/$\overline{borrow}$ bit (for `ADDWF` and `SUBWF` instructions)
ADDWF
1 = A carry from the 4th low order bit of the result occurred
0 = A carry from the 4th low order bit of the result did not occur
SUBWF
1 = A borrow from the 4th low order bit of the result did not occur
0 = A borrow from the 4th low order bit of the result occurred

bit 0: **C**: Carry/$\overline{borrow}$ bit (for `ADDWF`, `SUBWF` and `RRF`, `RLF` instructions)

ADDWF	SUBWF	RRF or RLF
1 = A carry occurred	1 = A borrow did not occur	Load bit with LSB or MSB, respectively
0 = A carry did not occur	0 = A borrow occurred	

© 1999 Microchip Technology Inc.

4.4 OPTION Register

The OPTION register is a 8-bit wide, write-only register which contains various control bits to configure the Timer0/WDT prescaler and Timer0.

By executing the `OPTION` instruction, the contents of the W register will be transferred to the OPTION register. A RESET sets the OPTION<7:0> bits.

> **Note:** If TRIS bit is set to ‘0’, the wake-up on change and pull-up functions are disabled for that pin; i.e., note that TRIS overrides OPTION control of $\overline{\text{GPPU}}$ and $\overline{\text{GPWU}}$.
>
> **Note:** If the T0CS bit is set to ‘1’, GP2 is forced to be an input even if TRIS GP2 = ‘0’.

FIGURE 4-5: OPTION REGISTER

W-1	W-1	W-1	W-1	W-1	W-1	W-1	W-1
$\overline{\text{GPWU}}$	$\overline{\text{GPPU}}$	T0CS	T0SE	PSA	PS2	PS1	PS0
bit7	6	5	4	3	2	1	bit0

W = Writable bit
U = Unimplemented bit
- n = Value at POR reset
Reference Table 4-1 for other resets.

bit 7: **$\overline{\text{GPWU}}$:** Enable wake-up on pin change (GP0, GP1, GP3)
1 = Disabled
0 = Enabled

bit 6: **$\overline{\text{GPPU}}$**: Enable weak pull-ups (GP0, GP1, GP3)
1 = Disabled
0 = Enabled

bit 5: **T0CS**: Timer0 clock source select bit
1 = Transition on T0CKI pin
0 = Transition on internal instruction cycle clock, Fosc/4

bit 4: **T0SE**: Timer0 source edge select bit
1 = Increment on high to low transition on the T0CKI pin
0 = Increment on low to high transition on the T0CKI pin

bit 3: **PSA**: Prescaler assignment bit
1 = Prescaler assigned to the WDT
0 = Prescaler assigned to Timer0

bit 2-0: **PS2:PS0**: Prescaler rate select bits

Bit Value	Timer0 Rate	WDT Rate
000	1 : 2	1 : 1
001	1 : 4	1 : 2
010	1 : 8	1 : 4
011	1 : 16	1 : 8
100	1 : 32	1 : 16
101	1 : 64	1 : 32
110	1 : 128	1 : 64
111	1 : 256	1 : 128

4.5 OSCCAL Register

The Oscillator Calibration (OSCCAL) register is used to calibrate the internal 4 MHz oscillator. It contains four to six bits for calibration. Increasing the cal value increases the frequency. See Section 7.2.5 for more information on the internal oscillator.

FIGURE 4-6: OSCCAL REGISTER (ADDRESS 05h) FOR PIC12C508 AND PIC12C509

R/W-0	R/W-1	R/W-1	R/W-1	R/W-0	R/W-0	U-0	U-0
CAL3	CAL2	CAL1	CAL0	—	—	—	—
bit7							bit0

R = Readable bit
W = Writable bit
U = Unimplemented bit, read as ‘0’
- n = Value at POR reset

bit 7-4: **CAL<3:0>:** Calibration

bit 3-0: **Unimplemented:** Read as ’0’

FIGURE 4-7: OSCCAL REGISTER (ADDRESS 05h) FOR PIC12C508A/C509A/CR509A/12CE518/12CE519

R/W-1	R/W-0	R/W-0	R/W-0	R/W-0	R/W-0	U-0	U-0
CAL5	CAL4	CAL3	CAL2	CAL1	CAL0	—	—
bit7							bit0

R = Readable bit
W = Writable bit
U = Unimplemented bit, read as ‘0’
- n = Value at POR reset

bit 7-2: **CAL<5:0>:** Calibration

bit 1-0: **Unimplemented:** Read as ’0’

© 1999 Microchip Technology Inc.

4.6 Program Counter

As a program instruction is executed, the Program Counter (PC) will contain the address of the next program instruction to be executed. The PC value is increased by one every instruction cycle, unless an instruction changes the PC.

For a `GOTO` instruction, bits 8:0 of the PC are provided by the `GOTO` instruction word. The PC Latch (PCL) is mapped to PC<7:0>. Bit 5 of the STATUS register provides page information to bit 9 of the PC (Figure 4-8).

For a `CALL` instruction, or any instruction where the PCL is the destination, bits 7:0 of the PC again are provided by the instruction word. However, PC<8> does not come from the instruction word, but is always cleared (Figure 4-8).

Instructions where the PCL is the destination, or Modify PCL instructions, include `MOVWF PC`, `ADDWF PC`, and `BSF PC,5`.

Note:	Because PC<8> is cleared in the `CALL` instruction, or any Modify PCL instruction, all subroutine calls or computed jumps are limited to the first 256 locations of any program memory page (512 words long).

FIGURE 4-8: LOADING OF PC BRANCH INSTRUCTIONS - PIC12C5XX

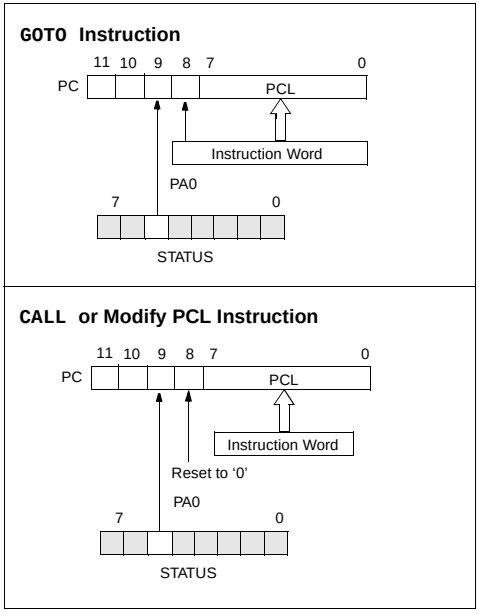

4.6.1 EFFECTS OF RESET

The Program Counter is set upon a RESET, which means that the PC addresses the last location in the last page i.e., the oscillator calibration instruction. After executing MOVLW XX, the PC will roll over to location 00h, and begin executing user code.

The STATUS register page preselect bits are cleared upon a RESET, which means that page 0 is preselected.

Therefore, upon a RESET, a `GOTO` instruction will automatically cause the program to jump to page 0 until the value of the page bits is altered.

4.7 Stack

PIC12C5XX devices have a 12-bit wide L.I.F.O. hardware push/pop stack.

A `CALL` instruction will *push* the current value of stack 1 into stack 2 and then push the current program counter value, incremented by one, into stack level 1. If more than two sequential `CALL`'s are executed, only the most recent two return addresses are stored.

A `RETLW` instruction will *pop* the contents of stack level 1 into the program counter and then copy stack level 2 contents into level 1. If more than two sequential `RETLW`'s are executed, the stack will be filled with the address previously stored in level 2. Note that the W register will be loaded with the literal value specified in the instruction. This is particularly useful for the implementation of data look-up tables within the program memory.

Upon any reset, the contents of the stack remain unchanged, however the program counter (PCL) will also be reset to 0.

Note 1:	There are no STATUS bits to indicate stack overflows or stack underflow conditions.
Note 2:	There are no instructions mnemonics called PUSH or POP. These are actions that occur from the execution of the `CALL` and `RETLW` instructions.

4.8 Indirect Data Addressing; INDF and FSR Registers

The INDF register is not a physical register. Addressing INDF actually addresses the register whose address is contained in the FSR register (FSR is a *pointer*). This is indirect addressing.

EXAMPLE 4-1: INDIRECT ADDRESSING

- Register file 07 contains the value 10h
- Register file 08 contains the value 0Ah
- Load the value 07 into the FSR register
- A read of the INDF register will return the value of 10h
- Increment the value of the FSR register by one (FSR = 08)
- A read of the INDR register now will return the value of 0Ah.

Reading INDF itself indirectly (FSR = 0) will produce 00h. Writing to the INDF register indirectly results in a no-operation (although STATUS bits may be affected).

A simple program to clear RAM locations 10h-1Fh using indirect addressing is shown in Example 4-2.

EXAMPLE 4-2: HOW TO CLEAR RAM USING INDIRECT ADDRESSING

```
            movlw   0x10    ;initialize pointer
            movwf   FSR     ; to RAM
NEXT        clrf    INDF    ;clear INDF register
            incf    FSR,F   ;inc pointer
            btfsc   FSR,4   ;all done?
            goto    NEXT    ;NO, clear next
CONTINUE
            :               ;YES, continue
```

The FSR is a 5-bit wide register. It is used in conjunction with the INDF register to indirectly address the data memory area.

The FSR<4:0> bits are used to select data memory addresses 00h to 1Fh.

PIC12C508/PIC12C508A/PIC12CE518: Does not use banking. FSR<7:5> are unimplemented and read as '1's.

PIC12C509/PIC12C509A/PIC12CR509A/PIC12CE519: Uses FSR<5>. Selects between bank 0 and bank 1. FSR<7:6> is unimplemented, read as '1' .

FIGURE 4-9: DIRECT/INDIRECT ADDRESSING

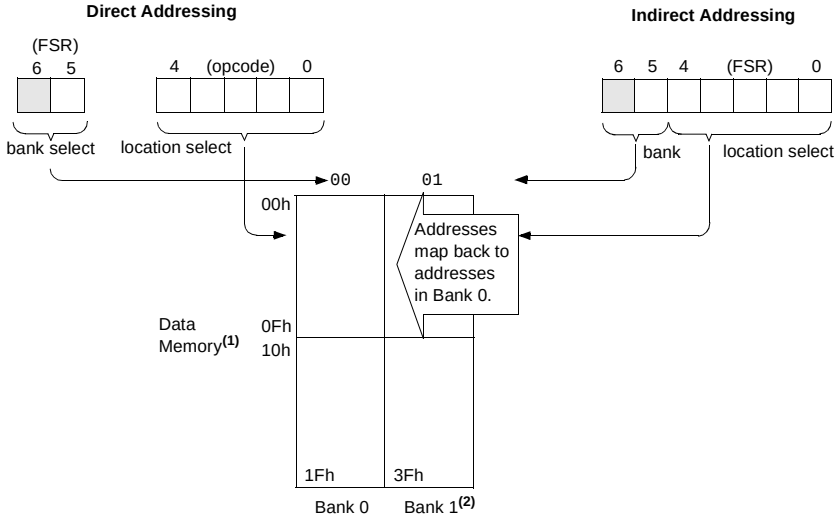

Note 1: For register map detail see Section 4.2.

Note 2: PIC12C509, PIC12C509A, PIC12CR509A, PIC12CE519.

© 1999 Microchip Technology Inc.

5.0 I/O PORT

As with any other register, the I/O register can be written and read under program control. However, read instructions (e.g., `MOVF GPIO,W`) always read the I/O pins independent of the pin's input/output modes. On RESET, all I/O ports are defined as input (inputs are at hi-impedance) since the I/O control registers are all set. See Section 7.0 for SCL and SDA description for PIC12CE5XX.

5.1 GPIO

GPIO is an 8-bit I/O register. Only the low order 6 bits are used (GP5:GP0). Bits 7 and 6 are unimplemented and read as '0's. Please note that GP3 is an input only pin. The configuration word can set several I/O's to alternate functions. When acting as alternate functions the pins will read as '0' during port read. Pins GP0, GP1, and GP3 can be configured with weak pull-ups and also with wake-up on change. The wake-up on change and weak pull-up functions are not pin selectable. If pin 4 is configured as $\overline{\text{MCLR}}$, weak pull-up is always on and wake-up on change for this pin is not enabled.

5.2 TRIS Register

The output driver control register is loaded with the contents of the W register by executing the `TRIS f` instruction. A '1' from a TRIS register bit puts the corresponding output driver in a hi-impedance mode. A '0' puts the contents of the output data latch on the selected pins, enabling the output buffer. The exceptions are GP3 which is input only and GP2 which may be controlled by the option register, see Figure 4-5.

Note:	A read of the ports reads the pins, not the output data latches. That is, if an output driver on a pin is enabled and driven high, but the external system is holding it low, a read of the port will indicate that the pin is low.

The TRIS registers are "write-only" and are set (output drivers disabled) upon RESET.

5.3 I/O Interfacing

The equivalent circuit for an I/O port pin is shown in Figure 5-1. All port pins, except GP3 which is input only, may be used for both input and output operations. For input operations these ports are non-latching. Any input must be present until read by an input instruction (e.g., `MOVF GPIO,W`). The outputs are latched and remain unchanged until the output latch is rewritten. To use a port pin as output, the corresponding direction control bit in TRIS must be cleared (= 0). For use as an input, the corresponding TRIS bit must be set. Any I/O pin (except GP3) can be programmed individually as input or output.

FIGURE 5-1: EQUIVALENT CIRCUIT FOR A SINGLE I/O PIN

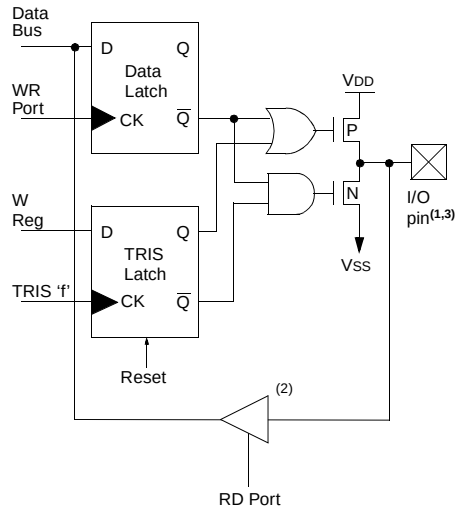

Note 1: I/O pins have protection diodes to V_{DD} and V_{SS}.

Note 2: See Table 3-1 for buffer type.

Note 3: See Section 7.0 for SCL and SDA description for PIC12CE5XX

TABLE 5-1: SUMMARY OF PORT REGISTERS

Address	Name	Bit 7	Bit 6	Bit 5	Bit 4	Bit 3	Bit 2	Bit 1	Bit 0	Value on Power-On Reset	Value on All Other Resets
N/A	TRIS	—	—							--11 1111	--11 1111
N/A	OPTION	$\overline{GPWU}$	$\overline{GPPU}$	T0CS	T0SE	PSA	PS2	PS1	PS0	1111 1111	1111 1111
03H	STATUS	GPWUF	—	PAO	$\overline{TO}$	$\overline{PD}$	Z	DC	C	0001 1xxx	q00q quuu(1)
06h	GPIO (PIC12C508/ PIC12C509/ PIC12C508A/ PIC12C509A/ PIC12CR509A)	—	—	GP5	GP4	GP3	GP2	GP1	GP0	--xx xxxx	--uu uuuu
06h	GPIO (PIC12CE518/ PIC12CE519)	SCL	SDA	GP5	GP4	GP3	GP2	GP1	GP0	11xx xxxx	11uu uuuu

Legend: Shaded cells not used by Port Registers, read as ‘0’, — = unimplemented, read as '0', x = unknown, u = unchanged, q = see tables in Section 8.7 for possible values.

Note 1: If reset was due to wake-up on change, then bit 7 = 1. All other resets will cause bit 7 = 0.

5.4 I/O Programming Considerations

5.4.1 BI-DIRECTIONAL I/O PORTS

Some instructions operate internally as read followed by write operations. The BCF and BSF instructions, for example, read the entire port into the CPU, execute the bit operation and re-write the result. Caution must be used when these instructions are applied to a port where one or more pins are used as input/outputs. For example, a BSF operation on bit5 of GPIO will cause all eight bits of GPIO to be read into the CPU, bit5 to be set and the GPIO value to be written to the output latches. If another bit of GPIO is used as a bi-directional I/O pin (say bit0) and it is defined as an input at this time, the input signal present on the pin itself would be read into the CPU and rewritten to the data latch of this particular pin, overwriting the previous content. As long as the pin stays in the input mode, no problem occurs. However, if bit0 is switched into output mode later on, the content of the data latch may now be unknown.

Example 5-1 shows the effect of two sequential read-modify-write instructions (e.g., BCF, BSF, etc.) on an I/O port.

A pin actively outputting a high or a low should not be driven from external devices at the same time in order to change the level on this pin (“wired-or”, “wired-and”). The resulting high output currents may damage the chip.

EXAMPLE 5-1: READ-MODIFY-WRITE INSTRUCTIONS ON AN I/O PORT

```
;Initial GPIO Settings
; GPIO<5:3> Inputs
; GPIO<2:0> Outputs
;
;                    GPIO latch  GPIO pins
;                    ----------  ----------
  BCF   GPIO, 5   ;--01 -ppp   --11 pppp
  BCF   GPIO, 4   ;--10 -ppp   --11 pppp
  MOVLW 007h       ;
  TRIS  GPIO      ;--10 -ppp   --11 pppp
;
;Note that the user may have expected the pin
;values to be --00 pppp. The 2nd BCF caused
;GP5 to be latched as the pin value (High).
```

5.4.2 SUCCESSIVE OPERATIONS ON I/O PORTS

The actual write to an I/O port happens at the end of an instruction cycle, whereas for reading, the data must be valid at the beginning of the instruction cycle (Figure 5-2). Therefore, care must be exercised if a write followed by a read operation is carried out on the same I/O port. The sequence of instructions should allow the pin voltage to stabilize (load dependent) before the next instruction, which causes that file to be read into the CPU, is executed. Otherwise, the previous state of that pin may be read into the CPU rather than the new state. When in doubt, it is better to separate these instructions with a NOP or another instruction not accessing this I/O port.

© 1999 Microchip Technology Inc.

FIGURE 5-2: SUCCESSIVE I/O OPERATION

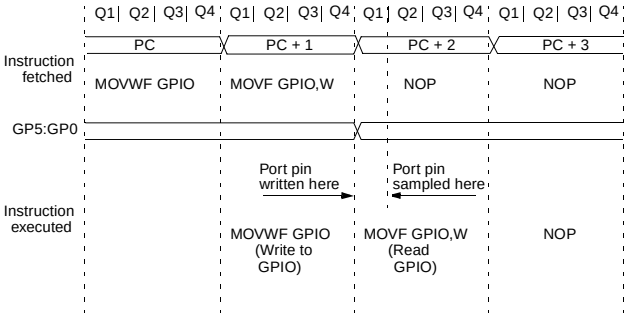

This example shows a write to GPIO followed by a read from GPIO.

Data setup time = (0.25 T_{CY} – T_{PD})

where: T_{CY} = instruction cycle.

T_{PD} = propagation delay

Therefore, at higher clock frequencies, a write followed by a read may be problematic.

NOTES:

© 1999 Microchip Technology Inc.

6.0 TIMER0 MODULE AND TMR0 REGISTER

The Timer0 module has the following features:

- 8-bit timer/counter register, TMR0
  - Readable and writable
- 8-bit software programmable prescaler
- Internal or external clock select
  - Edge select for external clock

Figure 6-1 is a simplified block diagram of the Timer0 module.

Timer mode is selected by clearing the T0CS bit (OPTION<5>). In timer mode, the Timer0 module will increment every instruction cycle (without prescaler). If TMR0 register is written, the increment is inhibited for the following two instruction cycles (Figure 6-2 and Figure 6-3). The user can work around this by writing an adjusted value to the TMR0 register.

Counter mode is selected by setting the T0CS bit (OPTION<5>). In this mode, Timer0 will increment either on every rising or falling edge of pin T0CKI. The T0SE bit (OPTION<4>) determines the source edge. Clearing the T0SE bit selects the rising edge. Restrictions on the external clock input are discussed in detail in Section 6.1.

The prescaler may be used by either the Timer0 module or the Watchdog Timer, but not both. The prescaler assignment is controlled in software by the control bit PSA (OPTION<3>). Clearing the PSA bit will assign the prescaler to Timer0. The prescaler is not readable or writable. When the prescaler is assigned to the Timer0 module, prescale values of 1:2, 1:4,..., 1:256 are selectable. Section 6.2 details the operation of the prescaler.

A summary of registers associated with the Timer0 module is found in Table 6-1.

FIGURE 6-1: TIMER0 BLOCK DIAGRAM

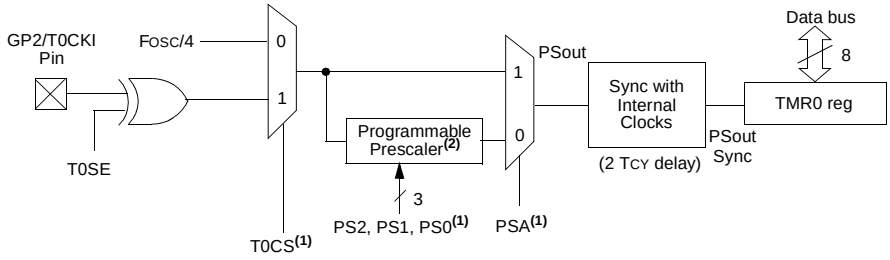

Note 1: Bits T0CS, T0SE, PSA, PS2, PS1 and PS0 are located in the OPTION register.
2: The prescaler is shared with the Watchdog Timer (Figure 6-5).

FIGURE 6-2: TIMER0 TIMING: INTERNAL CLOCK/NO PRESCALE

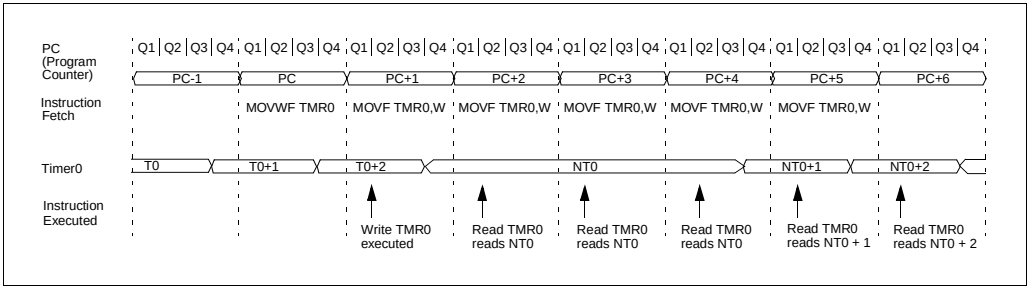

FIGURE 6-3: TIMER0 TIMING: INTERNAL CLOCK/PRESCALE 1:2

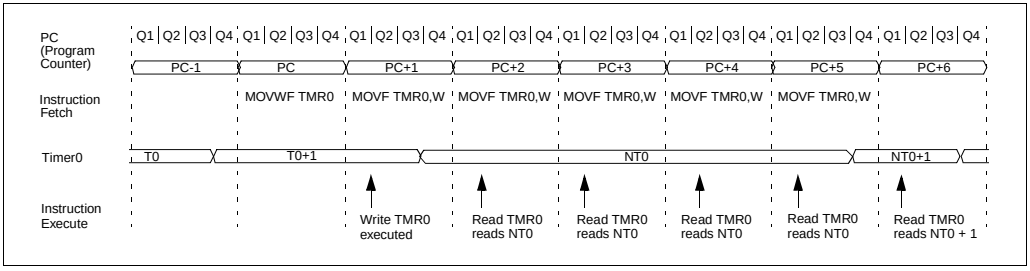

TABLE 6-1: REGISTERS ASSOCIATED WITH TIMER0

Address	Name	Bit 7	Bit 6	Bit 5	Bit 4	Bit 3	Bit 2	Bit 1	Bit 0	Value on Power-On Reset	Value on All Other Resets
01h	TMR0	Timer0 - 8-bit real-time clock/counter								xxxx xxxx	uuuu uuuu
N/A	OPTION	$\overline{\text{GPWU}}$	$\overline{\text{GPPU}}$	T0CS	T0SE	PSA	PS2	PS1	PS0	1111 1111	1111 1111
N/A	TRIS	—	—	GP5	GP4	GP3	GP2	GP1	GP0	--11 1111	--11 1111

Legend: Shaded cells not used by Timer0, - = unimplemented, x = unknown, u = unchanged,

© 1999 Microchip Technology Inc.

6.1 Using Timer0 with an External Clock

When an external clock input is used for Timer0, it must meet certain requirements. The external clock requirement is due to internal phase clock (TOSC) synchronization. Also, there is a delay in the actual incrementing of Timer0 after synchronization.

6.1.1 EXTERNAL CLOCK SYNCHRONIZATION

When no prescaler is used, the external clock input is the same as the prescaler output. The synchronization of T0CKI with the internal phase clocks is accomplished by sampling the prescaler output on the Q2 and Q4 cycles of the internal phase clocks (Figure 6-4). Therefore, it is necessary for T0CKI to be high for at least 2TOSC (and a small RC delay of 20 ns) and low for at least 2TOSC (and a small RC delay of 20 ns). Refer to the electrical specification of the desired device.

When a prescaler is used, the external clock input is divided by the asynchronous ripple counter-type prescaler so that the prescaler output is symmetrical. For the external clock to meet the sampling requirement, the ripple counter must be taken into account. Therefore, it is necessary for T0CKI to have a period of at least 4TOSC (and a small RC delay of 40 ns) divided by the prescaler value. The only requirement on T0CKI high and low time is that they do not violate the minimum pulse width requirement of 10 ns. Refer to parameters 40, 41 and 42 in the electrical specification of the desired device.

6.1.2 TIMER0 INCREMENT DELAY

Since the prescaler output is synchronized with the internal clocks, there is a small delay from the time the external clock edge occurs to the time the Timer0 module is actually incremented. Figure 6-4 shows the delay from the external clock edge to the timer incrementing.

6.1.3 OPTION REGISTER EFFECT ON GP2 TRIS

If the option register is set to read TIMER0 from the pin, the port is forced to an input regardless of the TRIS register setting.

FIGURE 6-4: TIMER0 TIMING WITH EXTERNAL CLOCK

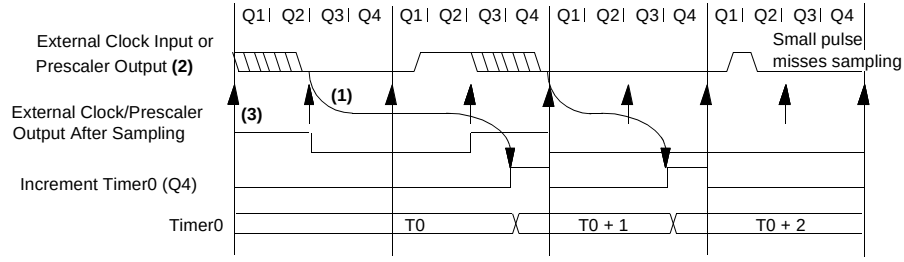

Note 1: Delay from clock input change to Timer0 increment is 3Tosc to 7Tosc. (Duration of Q = Tosc). Therefore, the error in measuring the interval between two edges on Timer0 input = ± 4Tosc max.
2: External clock if no prescaler selected, Prescaler output otherwise.
3: The arrows indicate the points in time where sampling occurs.

6.2 Prescaler

An 8-bit counter is available as a prescaler for the Timer0 module, or as a postscaler for the Watchdog Timer (WDT), respectively (Section 8.6). For simplicity, this counter is being referred to as “prescaler” throughout this data sheet. Note that the prescaler may be used by either the Timer0 module or the WDT, but not both. Thus, a prescaler assignment for the Timer0 module means that there is no prescaler for the WDT, and vice-versa.

The PSA and PS2:PS0 bits (OPTION<3:0>) determine prescaler assignment and prescale ratio.

When assigned to the Timer0 module, all instructions writing to the TMR0 register (e.g., `CLRF 1,` `MOVWF 1,` `BSF 1,x,` etc.) will clear the prescaler. When assigned to WDT, a `CLRWDT` instruction will clear the prescaler along with the WDT. The prescaler is neither readable nor writable. On a RESET, the prescaler contains all '0's.

6.2.1 SWITCHING PRESCALER ASSIGNMENT

The prescaler assignment is fully under software control (i.e., it can be changed “on the fly” during program execution). To avoid an unintended device RESET, the following instruction sequence (Example 6-1) must be executed when changing the prescaler assignment from Timer0 to the WDT.

EXAMPLE 6-1: CHANGING PRESCALER (TIMER0→WDT)

```
1.CLRWDT              ;Clear WDT
2.CLRF   TMR0         ;Clear TMR0 & Prescaler
3.MOVLW  '00xx1111'b  ;These 3 lines (5, 6, 7)
4.OPTION              ; are required only if
                      ; desired
5.CLRWDT              ;PS<2:0> are 000 or 001
6.MOVLW  '00xx1xxx'b  ;Set Postscaler to
7.OPTION              ; desired WDT rate
```

To change prescaler from the WDT to the Timer0 module, use the sequence shown in Example 6-2. This sequence must be used even if the WDT is disabled. A `CLRWDT` instruction should be executed before switching the prescaler.

EXAMPLE 6-2: CHANGING PRESCALER (WDT→TIMER0)

```
CLRWDT                ;Clear WDT and
                      ;prescaler
MOVLW   'xxxx0xxx'    ;Select TMR0, new
                      ;prescale value and
                      ;clock source
OPTION
```

FIGURE 6-5: BLOCK DIAGRAM OF THE TIMER0/WDT PRESCALER

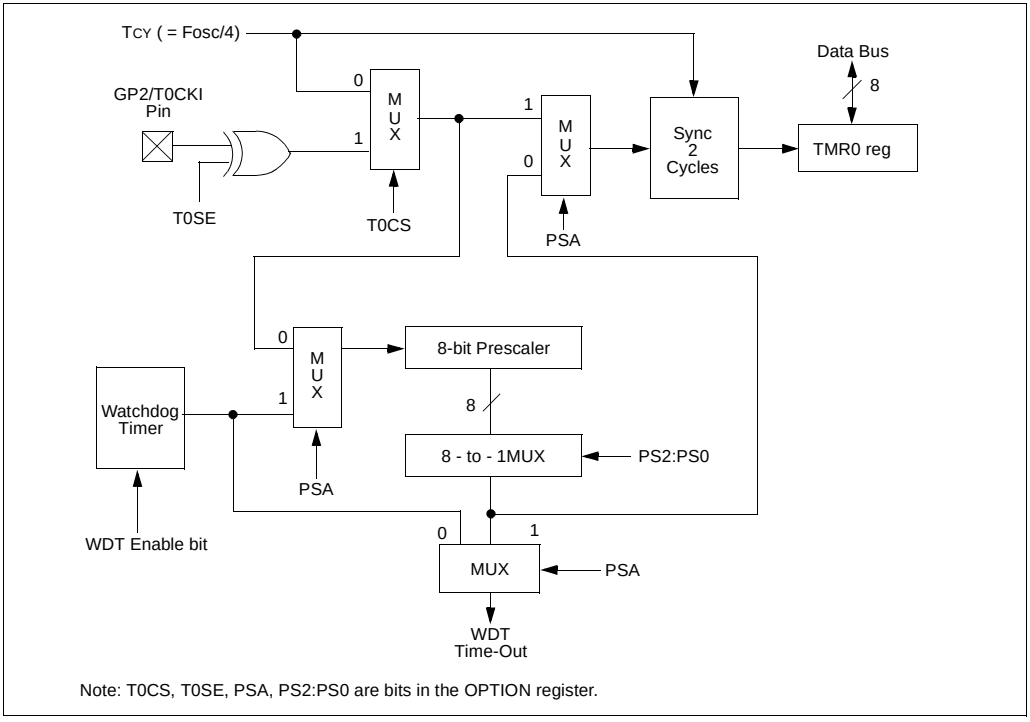

Note: T0CS, T0SE, PSA, PS2:PS0 are bits in the OPTION register.

© 1999 Microchip Technology Inc.

7.0 EEPROM PERIPHERAL OPERATION

This section applies to PIC12CE518 and PIC12CE519 only.

The PIC12CE518 and PIC12CE519 each have 16 bytes of EEPROM data memory. The EEPROM memory has an endurance of 1,000,000 erase/write cycles and a data retention of greater than 40 years. The EEPROM data memory supports a bi-directional 2-wire bus and data transmission protocol. These two-wires are serial data (SDA) and serial clock (SCL), that are mapped to bit6 and bit7, respectively, of the GPIO register (SFR 06h). Unlike the GP0-GP5 that are connected to the I/O pins, SDA and SCL are only connected to the internal EEPROM peripheral. For most applications, all that is required is calls to the following functions:

```
; Byte_Write: Byte write routine
;       Inputs: EEPROM Address     EEADDR
;               EEPROM Data        EEDATA
;       Outputs:   Return 01 in W if OK, else
                   return 00 in W
;
; Read_Current: Read EEPROM at address
currently held by EE device.
;       Inputs: NONE
;       Outputs:   EEPROM Data    EEDATA
;                  Return 01 in W if OK, else
                   return 00 in W
;
; Read_Random: Read EEPROM byte at supplied
address
;       Inputs: EEPROM Address     EEADDR
;       Outputs:   EEPROM Data    EEDATA
;                  Return 01 in W if OK,
                   else return 00 in W
```

The code for these functions is available on our website www.microchip.com. The code will be accessed by either including the source code FL51XINC.ASM or by linking FLASH5IX.ASM.

It is very important to check the return codes when using these calls, and retry the operation if unsuccessful. Unsuccessful return codes occur when the EE data memory is busy with the previous write, which can take up to 4 mS.

7.0.1 SERIAL DATA

SDA is a bi-directional pin used to transfer addresses and data into and data out of the device.

For normal data transfer SDA is allowed to change only during SCL low. Changes during SCL high are reserved for indicating the START and STOP conditions.

The EEPROM interface is a 2-wire bus protocol consisting of data (SDA) and a clock (SCL). Although these lines are mapped into the GPIO register, they are not accessible as external pins; only to the internal EEPROM peripheral. SDA and SCL operation is also slightly different than GPO-GP5 as listed below. Namely, to avoid code overhead in modifying the TRIS register, both SDA and SCL are always outputs. To read data from the EEPROM peripheral requires outputting a ‘1’ on SDA placing it in high-Z state, where only the internal 100K pull-up is active on the SDA line.

SDA:
- Built-in 100K (typical) pull-up to VDD
- Open-drain (pull-down only)
- Always an output
- Outputs a ‘1’ on reset

SCL:
- Full CMOS output
- Always an output
- Outputs a ‘1’ on reset

The following example requires:

- Code Space: 77 words
- RAM Space: 5 bytes (4 are overlayable)
- Stack Levels:1 (The call to the function itself. The functions do not call any lower level functions.)
- Timing:
  - WRITE_BYTE takes 328 cycles
  - READ_CURRENT takes 212 cycles
  - READ_RANDOM takes 416 cycles.
- IO Pins: 0 (No external IO pins are used)

This code must reside in the lower half of a page. The code achieves it’s small size without additional calls through the use of a sequencing table. The table is a list of procedures that must be called in order. The table uses an ADDWF PCL,F instruction, effectively a computed goto, to sequence to the next procedure. However the ADDWF PCL,F instruction yields an 8 bit address, forcing the code to reside in the first 256 addresses of a page.

Figure 7-1: Block diagram of GPIO6 (SDA line)

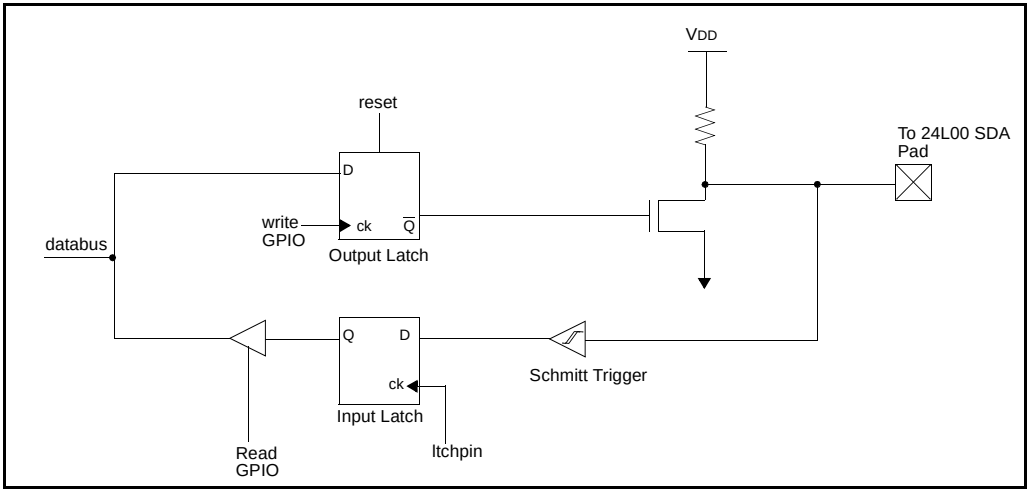

Figure 7-2: Block diagram of GPIO7 (SCL line)

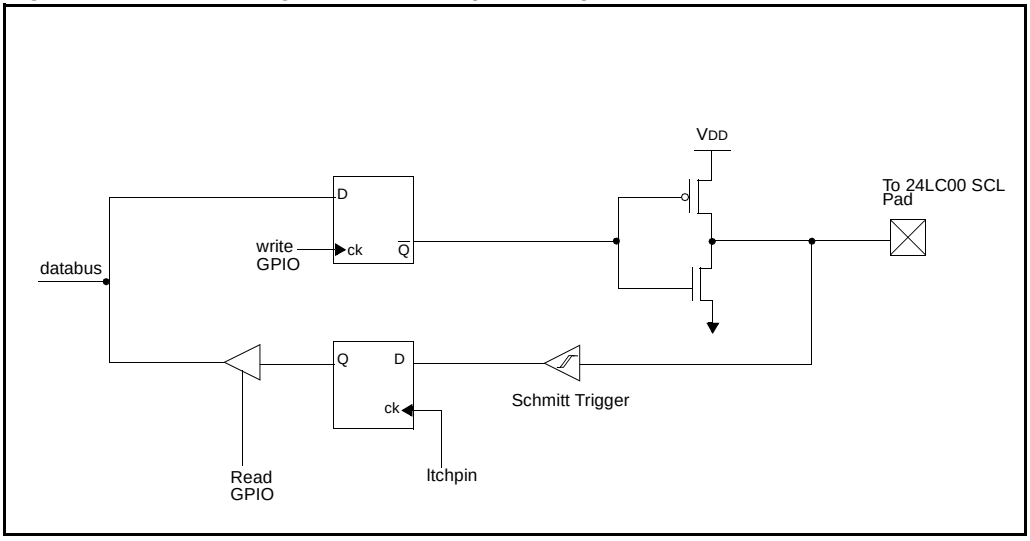

© 1999 Microchip Technology Inc.

7.0.2 SERIAL CLOCK

This SCL input is used to synchronize the data transfer from and to the device.

7.1 BUS CHARACTERISTICS

The following **bus protocol** is to be used with the EEPROM data memory.

- Data transfer may be initiated only when the bus is not busy.

During data transfer, the data line must remain stable whenever the clock line is HIGH. Changes in the data line while the clock line is HIGH will be interpreted as a START or STOP condition.

Accordingly, the following bus conditions have been defined (Figure 7-3).

7.1.1 BUS NOT BUSY (A)

Both data and clock lines remain HIGH.

7.1.2 START DATA TRANSFER (B)

A HIGH to LOW transition of the SDA line while the clock (SCL) is HIGH determines a START condition. All commands must be preceded by a START condition.

7.1.3 STOP DATA TRANSFER (C)

A LOW to HIGH transition of the SDA line while the clock (SCL) is HIGH determines a STOP condition. All operations must be ended with a STOP condition.

7.1.4 DATA VALID (D)

The state of the data line represents valid data when, after a START condition, the data line is stable for the duration of the HIGH period of the clock signal.

The data on the line must be changed during the LOW period of the clock signal. There is one bit of data per clock pulse.

Each data transfer is initiated with a START condition and terminated with a STOP condition. The number of the data bytes transferred between the START and STOP conditions is determined by the master device and is theoretically unlimited.

7.1.5 ACKNOWLEDGE

Each receiving device, when addressed, is obliged to generate an acknowledge after the reception of each byte. The master device must generate an extra clock pulse which is associated with this acknowledge bit.

Note:	Acknowledge bits are not generated if an internal programming cycle is in progress.

The device that acknowledges has to pull down the SDA line during the acknowledge clock pulse in such a way that the SDA line is stable LOW during the HIGH period of the acknowledge related clock pulse. Of course, setup and hold times must be taken into account. A master must signal an end of data to the slave by not generating an acknowledge bit on the last byte that has been clocked out of the slave. In this case, the slave must leave the data line HIGH to enable the master to generate the STOP condition (Figure 7-4).

FIGURE 7-3: DATA TRANSFER SEQUENCE ON THE SERIAL BUS

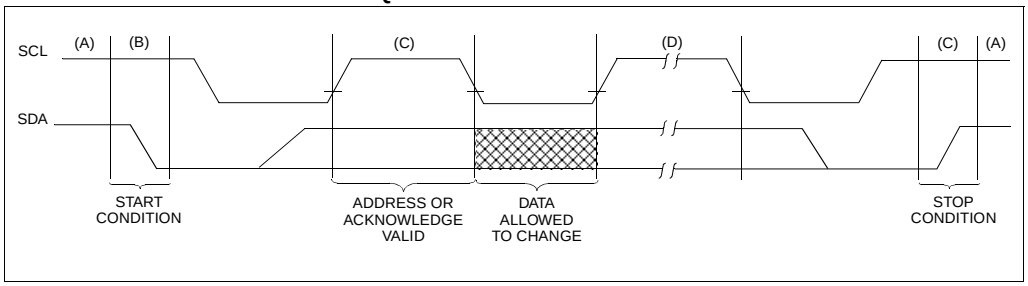

FIGURE 7-4: ACKNOWLEDGE TIMING

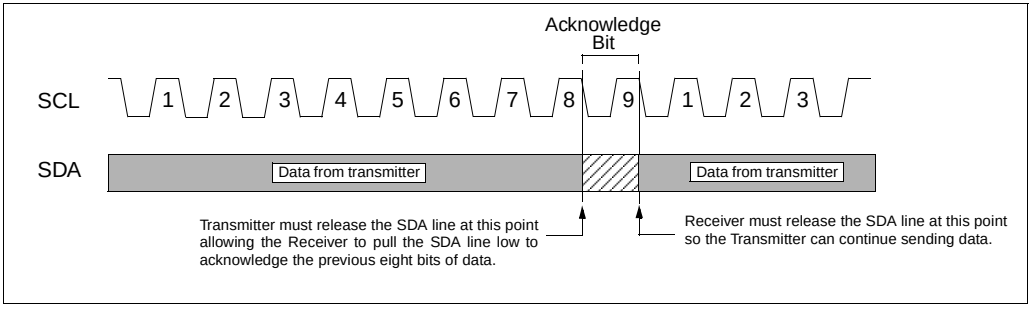

7.2 Device Addressing

After generating a START condition, the bus master transmits a control byte consisting of a slave address and a Read/$\overline{\text{Write}}$ bit that indicates what type of operation is to be performed. The slave address consists of a 4-bit device code (1010) followed by three don't care bits.

The last bit of the control byte determines the operation to be performed. When set to a one a read operation is selected, and when set to a zero a write operation is selected. (Figure 7-5). The bus is monitored for its corresponding slave address all the time. It generates an acknowledge bit if the slave address was true and it is not in a programming mode.

FIGURE 7-5: CONTROL BYTE FORMAT

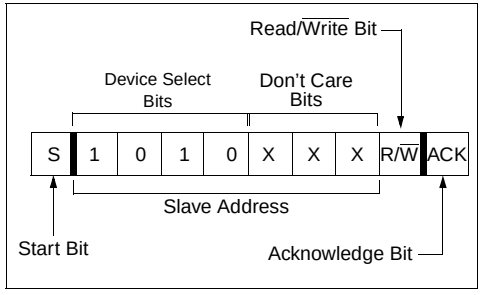

© 1999 Microchip Technology Inc.

7.3 WRITE OPERATIONS

7.3.1 BYTE WRITE

Following the start signal from the master, the device code (4 bits), the don't care bits (3 bits), and the R/$\overline{W}$ bit (which is a logic low) are placed onto the bus by the master transmitter. This indicates to the addressed slave receiver that a byte with a word address will follow after it has generated an acknowledge bit during the ninth clock cycle. Therefore, the next byte transmitted by the master is the word address and will be written into the address pointer. Only the lower four address bits are used by the device, and the upper four bits are don't cares. The address byte is acknowledgeable and the master device will then transmit the data word to be written into the addressed memory location. The memory acknowledges again and the master generates a stop condition. This initiates the internal write cycle, and during this time will not generate acknowledge signals (Figure 7-7). After a byte write command, the internal address counter will not be incremented and will point to the same address location that was just written. If a stop bit is transmitted to the device at any point in the write command sequence before the entire sequence is complete, then the command will abort and no data will be written. If more than 8 data bits are transmitted before the stop bit is sent, then the device will clear the previously loaded byte and begin loading the data buffer again. If more than one data byte is transmitted to the device and a stop bit is sent before a full eight data bits have been transmitted, then the write command will abort and no data will be written. The EEPROM memory employs a V_{CC} threshold detector circuit which disables the internal erase/write logic if the V_{CC} is below minimum VDD.

Byte write operations must be preceded and immediately followed by a bus not busy bus cycle where both SDA and SCL are held high.

7.4 ACKNOWLEDGE POLLING

Since the device will not acknowledge during a write cycle, this can be used to determine when the cycle is complete (this feature can be used to maximize bus throughput). Once the stop condition for a write command has been issued from the master, the device initiates the internally timed write cycle. ACK polling can be initiated immediately. This involves the master sending a start condition followed by the control byte for a write command (R/$\overline{W}$ = 0). If the device is still busy with the write cycle, then no ACK will be returned. If no ACK is returned, then the start bit and control byte must be re-sent. If the cycle is complete, then the device will return the ACK and the master can then proceed with the next read or write command. See Figure 7-6 for flow diagram.

FIGURE 7-6: ACKNOWLEDGE POLLING FLOW

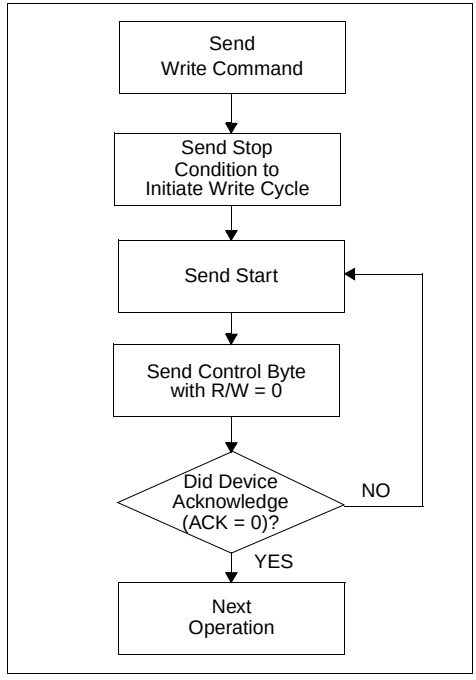

FIGURE 7-7: BYTE WRITE

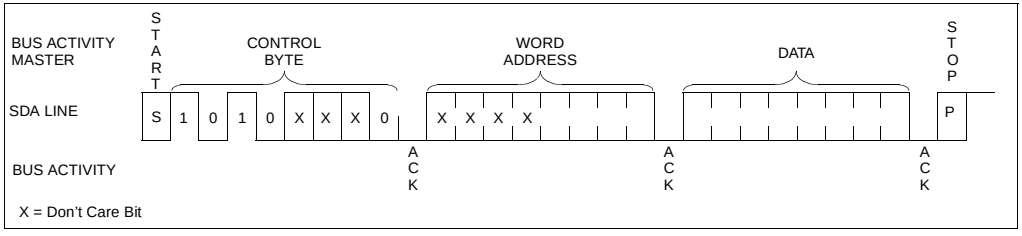

7.5 READ OPERATIONS

Read operations are initiated in the same way as write operations with the exception that the R/$\overline{W}$ bit of the slave address is set to one. There are three basic types of read operations: current address read, random read, and sequential read.

7.5.1 CURRENT ADDRESS READ

It contains an address counter that maintains the address of the last word accessed, internally incremented by one. Therefore, if the previous read access was to address n, the next current address read operation would access data from address n + 1. Upon receipt of the slave address with the R/$\overline{W}$ bit set to one, the device issues an acknowledge and transmits the eight bit data word. The master will not acknowledge the transfer but does generate a stop condition and the device discontinues transmission (Figure 7-8).

7.5.2 RANDOM READ

Random read operations allow the master to access any memory location in a random manner. To perform this type of read operation, first the word address must be set. This is done by sending the word address to the device as part of a write operation. After the word address is sent, the master generates a start condition following the acknowledge. This terminates the write operation, but not before the internal address pointer is set. Then the master issues the control byte again but with the R/$\overline{W}$ bit set to a one. It will then issue an acknowledge and transmits the eight bit data word. The master will not acknowledge the transfer but does generate a stop condition and the device discontinues transmission (Figure 7-9). After this command, the internal address counter will point to the address location following the one that was just read.

7.5.3 SEQUENTIAL READ

Sequential reads are initiated in the same way as a random read except that after the device transmits the first data byte, the master issues an acknowledge as opposed to a stop condition in a random read. This directs the device to transmit the next sequentially addressed 8-bit word (Figure 7-10).

To provide sequential reads, it contains an internal address pointer which is incremented by one at the completion of each read operation. This address pointer allows the entire memory contents to be serially read during one operation.

FIGURE 7-8: CURRENT ADDRESS READ

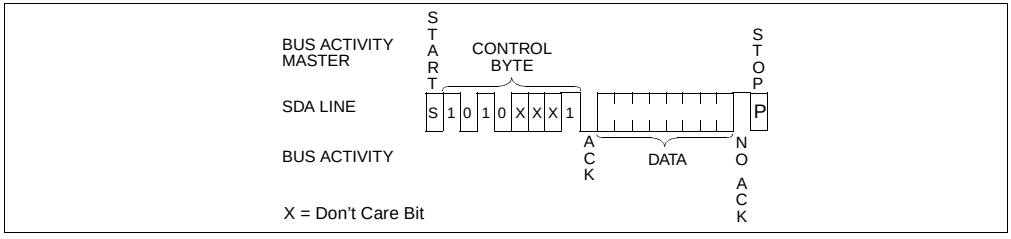

FIGURE 7-9: RANDOM READ

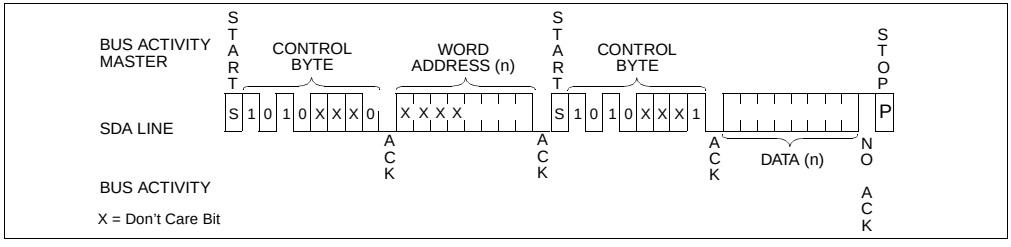

FIGURE 7-10: SEQUENTIAL READ

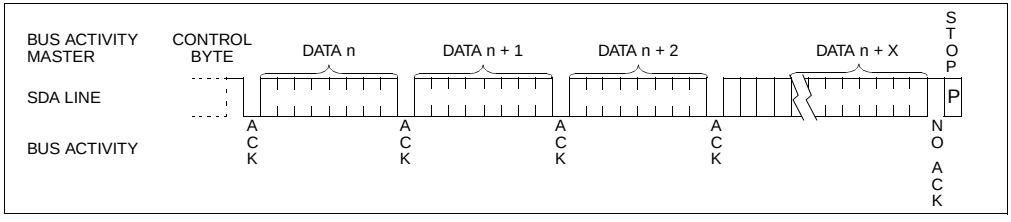

© 1999 Microchip Technology Inc.

8.0 SPECIAL FEATURES OF THE CPU

What sets a microcontroller apart from other processors are special circuits to deal with the needs of real-time applications. The PIC12C5XX family of microcontrollers has a host of such features intended to maximize system reliability, minimize cost through elimination of external components, provide power saving operating modes and offer code protection. These features are:

- Oscillator selection
- Reset
  - Power-On Reset (POR)
  - Device Reset Timer (DRT)
  - Wake-up from SLEEP on pin change
- Watchdog Timer (WDT)
- SLEEP
- Code protection
- ID locations
- In-circuit Serial Programming

The PIC12C5XX has a Watchdog Timer which can be shut off only through configuration bit WDTE. It runs off of its own RC oscillator for added reliability. If using XT or LP selectable oscillator options, there is always an 18 ms (nominal) delay provided by the Device Reset Timer (DRT), intended to keep the chip in reset until the crystal oscillator is stable. If using INTRC or EXTRC there is an 18 ms delay only on V_{DD} power-up. With this timer on-chip, most applications need no external reset circuitry.

The SLEEP mode is designed to offer a very low current power-down mode. The user can wake-up from SLEEP through a change on input pins or through a Watchdog Timer time-out. Several oscillator options are also made available to allow the part to fit the application, including an internal 4 MHz oscillator. The EXTRC oscillator option saves system cost while the LP crystal option saves power. A set of configuration bits are used to select various options.

8.1 Configuration Bits

The PIC12C5XX configuration word consists of 12 bits. Configuration bits can be programmed to select various device configurations. Two bits are for the selection of the oscillator type, one bit is the Watchdog Timer enable bit, and one bit is the $\overline{MCLR}$ enable bit.

FIGURE 8-1: CONFIGURATION WORD FOR PIC12C5XX

—	—	—	—	—	—	—	MCLRE	CP	WDTE	FOSC1	FOSC0
bit11	10	9	8	7	6	5	4	3	2	1	bit0

Register:	CONFIG
Address(1):	FFFh

bit 11-5: **Unimplemented**

bit 4: **MCLRE:** $\overline{MCLR}$ enable bit.
1 = $\overline{MCLR}$ pin enabled
0 = $\overline{MCLR}$ tied to V_{DD}, (Internally)

bit 3: **CP:** Code protection bit.
1 = Code protection off
0 = Code protection on

bit 2: **WDTE:** Watchdog timer enable bit
1 = WDT enabled
0 = WDT disabled

bit 1-0: **FOSC1:FOSC0:** Oscillator selection bits
11 = EXTRC - external RC oscillator
10 = INTRC - internal RC oscillator
01 = XT oscillator
00 = LP oscillator

Note 1: Refer to the PIC12C5XX Programming Specifications to determine how to access the configuration word. This register is not user addressable during device operation.

© 1999 Microchip Technology Inc.

8.2 Oscillator Configurations

8.2.1 OSCILLATOR TYPES

The PIC12C5XX can be operated in four different oscillator modes. The user can program two configuration bits (FOSC1:FOSC0) to select one of these four modes:

- LP: Low Power Crystal
- XT: Crystal/Resonator
- INTRC: Internal 4 MHz Oscillator
- EXTRC: External Resistor/Capacitor

8.2.2 CRYSTAL OSCILLATOR / CERAMIC RESONATORS

In XT or LP modes, a crystal or ceramic resonator is connected to the GP5/OSC1/CLKIN and GP4/OSC2 pins to establish oscillation (Figure 8-2). The PIC12C5XX oscillator design requires the use of a parallel cut crystal. Use of a series cut crystal may give a frequency out of the crystal manufacturers specifications. When in XT or LP modes, the device can have an external clock source drive the GP5/OSC1/CLKIN pin (Figure 8-3).

FIGURE 8-2: CRYSTAL OPERATION (OR CERAMIC RESONATOR) (XT OR LP OSC CONFIGURATION)

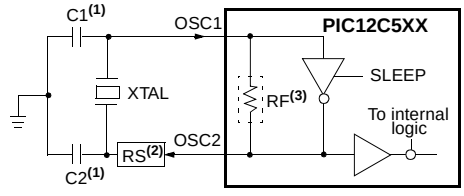

Note 1: See Capacitor Selection tables for recommended values of C1 and C2.
2: A series resistor (RS) may be required for AT strip cut crystals.
3: RF approximate value = 10 MΩ.

FIGURE 8-3: EXTERNAL CLOCK INPUT OPERATION (XT OR LP OSC CONFIGURATION)

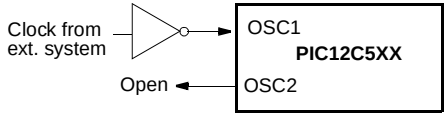

TABLE 8-1: CAPACITOR SELECTION FOR CERAMIC RESONATORS - PIC12C5XX

Osc Type	Resonator Freq	Cap. Range C1	Cap. Range C2
XT	4.0 MHz	30 pF	30 pF

These values are for design guidance only. Since each resonator has its own characteristics, the user should consult the resonator manufacturer for appropriate values of external components.

TABLE 8-2: CAPACITOR SELECTION FOR CRYSTAL OSCILLATOR - PIC12C5XX

Osc Type	Resonator Freq	Cap.Range C1	Cap. Range C2
LP	32 kHz(1)	15 pF	15 pF
XT	200 kHz 1 MHz 4 MHz	47-68 pF 15 pF 15 pF	47-68 pF 15 pF 15 pF

Note 1: For V_{DD} > 4.5V, C1 = C2 ≈ 30 pF is recommended.

These values are for design guidance only. Rs may be required to avoid overdriving crystals with low drive level specification. Since each crystal has its own characteristics, the user should consult the crystal manufacturer for appropriate values of external components.

© 1999 Microchip Technology Inc.

8.2.3 EXTERNAL CRYSTAL OSCILLATOR CIRCUIT

Either a prepackaged oscillator or a simple oscillator circuit with TTL gates can be used as an external crystal oscillator circuit. Prepackaged oscillators provide a wide operating range and better stability. A well-designed crystal oscillator will provide good performance with TTL gates. Two types of crystal oscillator circuits can be used: one with parallel resonance, or one with series resonance.

Figure 8-4 shows implementation of a parallel resonant oscillator circuit. The circuit is designed to use the fundamental frequency of the crystal. The 74AS04 inverter performs the 180-degree phase shift that a parallel oscillator requires. The 4.7 kΩ resistor provides the negative feedback for stability. The 10 kΩ potentiometers bias the 74AS04 in the linear region. This circuit could be used for external oscillator designs.

FIGURE 8-4: EXTERNAL PARALLEL RESONANT CRYSTAL OSCILLATOR CIRCUIT

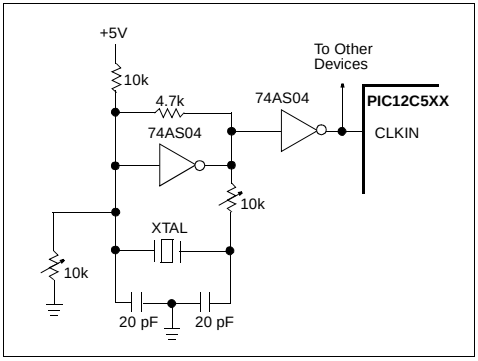

Figure 8-5 shows a series resonant oscillator circuit. This circuit is also designed to use the fundamental frequency of the crystal. The inverter performs a 180-degree phase shift in a series resonant oscillator circuit. The 330 Ω resistors provide the negative feedback to bias the inverters in their linear region.

FIGURE 8-5: EXTERNAL SERIES RESONANT CRYSTAL OSCILLATOR CIRCUIT

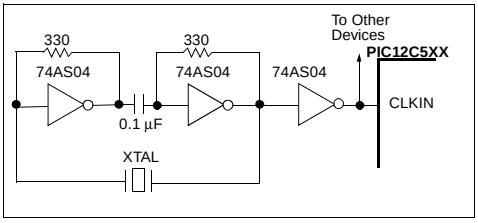

8.2.4 EXTERNAL RC OSCILLATOR

For timing insensitive applications, the RC device option offers additional cost savings. The RC oscillator frequency is a function of the supply voltage, the resistor (Rext) and capacitor (Cext) values, and the operating temperature. In addition to this, the oscillator frequency will vary from unit to unit due to normal process parameter variation. Furthermore, the difference in lead frame capacitance between package types will also affect the oscillation frequency, especially for low Cext values. The user also needs to take into account variation due to tolerance of external R and C components used.

Figure 8-6 shows how the R/C combination is connected to the PIC12C5XX. For Rext values below 2.2 kΩ, the oscillator operation may become unstable, or stop completely. For very high Rext values (e.g., 1 MΩ) the oscillator becomes sensitive to noise, humidity and leakage. Thus, we recommend keeping Rext between 3 kΩ and 100 kΩ.

Although the oscillator will operate with no external capacitor (Cext = 0 pF), we recommend using values above 20 pF for noise and stability reasons. With no or small external capacitance, the oscillation frequency can vary dramatically due to changes in external capacitances, such as PCB trace capacitance or package lead frame capacitance.

The Electrical Specifications sections show RC frequency variation from part to part due to normal process variation. The variation is larger for larger R (since leakage current variation will affect RC frequency more for large R) and for smaller C (since variation of input capacitance will affect RC frequency more).

Also, see the Electrical Specifications sections for variation of oscillator frequency due to V_{DD} for given Rext/Cext values as well as frequency variation due to operating temperature for given R, C, and V_{DD} values.

FIGURE 8-6: EXTERNAL RC OSCILLATOR MODE

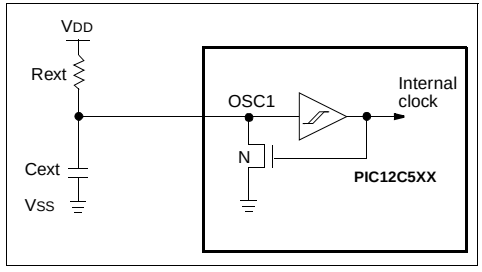

8.2.5 INTERNAL 4 MHz RC OSCILLATOR

The internal RC oscillator provides a fixed 4 MHz (nominal) system clock at VDD = 5V and 25°C, see “Electrical Specifications” section for information on variation over voltage and temperature.

In addition, a calibration instruction is programmed into the top of memory which contains the calibration value for the internal RC oscillator. This location is never code protected regardless of the code protect settings. This value is programmed as a `MOVLW XX` instruction where XX is the calibration value, and is placed at the reset vector. This will load the W register with the calibration value upon reset and the PC will then roll over to the users program at address 0x000. The user then has the option of writing the value to the OSCCAL Register (05h) or ignoring it.

OSCCAL, when written to with the calibration value, will “trim” the internal oscillator to remove process variation from the oscillator frequency. .

Note:	Please note that erasing the device will also erase the pre-programmed internal calibration value for the internal oscillator. The calibration value must be read prior to erasing the part. so it can be reprogrammed correctly later.

For the PIC12C508A, PIC12C509A, PIC12CE518, PIC12CE519, and PIC12CR509A, bits <7:2>, CAL5-CAL0 are used for calibration. Adjusting CAL5-0 from 000000 to 111111 yields a higher clock speed. Note that bits 1 and 0 of OSCCAL are unimplemented and should be written as 0 when modifying OSCCAL for compatibility with future devices.

For the PIC12C508 and PIC12C509, the upper 4 bits of the register are used. Writing a larger value in this location yields a higher clock speed.

8.3 RESET

The device differentiates between various kinds of reset:

a) Power on reset (POR)

b) $\overline{\text{MCLR}}$ reset during normal operation

c) $\overline{\text{MCLR}}$ reset during SLEEP

d) WDT time-out reset during normal operation

e) WDT time-out reset during SLEEP

f) Wake-up from SLEEP on pin change

Some registers are not reset in any way; they are unknown on POR and unchanged in any other reset. Most other registers are reset to “reset state” on power-on reset (POR), $\overline{\text{MCLR}}$, WDT or wake-up on pin change reset during normal operation. They are not affected by a WDT reset during SLEEP or $\overline{\text{MCLR}}$ reset during SLEEP, since these resets are viewed as resumption of normal operation. The exceptions to this are $\overline{\text{TO}}$, $\overline{\text{PD}}$, and GPWUF bits. They are set or cleared differently in different reset situations. These bits are used in software to determine the nature of reset. See Table 8-3 for a full description of reset states of all registers.

© 1999 Microchip Technology Inc.

TABLE 8-3: RESET CONDITIONS FOR REGISTERS

Register	Address	Power-on Reset	$\overline{\text{MCLR}}$ Reset WDT time-out Wake-up on Pin Change
W (PIC12C508/509)	—	qqqq xxxx (1)	qqqq uuuu (1)
W (PIC12C508A/509A/ PIC12CE518/519/ PIC12CE509A)	—	qqqq qqxx (1)	qqqq qquu (1)
INDF	00h	xxxx xxxx	uuuu uuuu
TMR0	01h	xxxx xxxx	uuuu uuuu
PC	02h	1111 1111	1111 1111
STATUS	03h	0001 1xxx	q00q quuu (2,3)
FSR (PIC12C508/ PIC12C508A/ PIC12CE518)	04h	111x xxxx	111u uuuu
FSR (PIC12C509/ PIC12C509A/ PIC12CE519/ PIC12CR509A)	04h	110x xxxx	11uu uuuu
OSCCAL (PIC12C508/509)	05h	0111 ----	uuuu ----
OSCCAL (PIC12C508A/509A/ PIC12CE518/512/ PIC12CR509A)	05h	1000 00--	uuuu uu--
GPIO (PIC12C508/PIC12C509/ PIC12C508A/ PIC12C509A/ PIC12CR509A)	06h	--xx xxxx	--uu uuuu
GPIO (PIC12CE518/ PIC12CE519)	06h	11xx xxxx	11uu uuuu
OPTION	—	1111 1111	1111 1111
TRIS	—	--11 1111	--11 1111

Legend: u = unchanged, x = unknown, - = unimplemented bit, read as ‘0’, q = value depends on condition.
Note 1: Bits <7:2> of W register contain oscillator calibration values due to `MOVLW XX` instruction at top of memory.
Note 2: See Table 8-7 for reset value for specific conditions
Note 3: If reset was due to wake-up on pin change, then bit 7 = 1. All other resets will cause bit 7 = 0.

TABLE 8-4: RESET CONDITION FOR SPECIAL REGISTERS

	STATUS Addr: 03h	PCL Addr: 02h
Power on reset	0001 1xxx	1111 1111
$\overline{\text{MCLR}}$ reset during normal operation	000u uuuu	1111 1111
$\overline{\text{MCLR}}$ reset during SLEEP	0001 0uuu	1111 1111
WDT reset during SLEEP	0000 0uuu	1111 1111
WDT reset normal operation	0000 uuuu	1111 1111
Wake-up from SLEEP on pin change	1001 0uuu	1111 1111

Legend: u = unchanged, x = unknown, - = unimplemented bit, read as ‘0’.

8.3.1 $\overline{\text{MCLR}}$ ENABLE

This configuration bit when unprogrammed (left in the '1' state) enables the external $\overline{\text{MCLR}}$ function. When programmed, the $\overline{\text{MCLR}}$ function is tied to the internal VDD, and the pin is assigned to be a GPIO. See Figure 8-7. When pin GP3/$\overline{\text{MCLR}}$/VPP is configured as $\overline{\text{MCLR}}$, the internal pull-up is always on.

FIGURE 8-7: $\overline{\text{MCLR}}$ SELECT

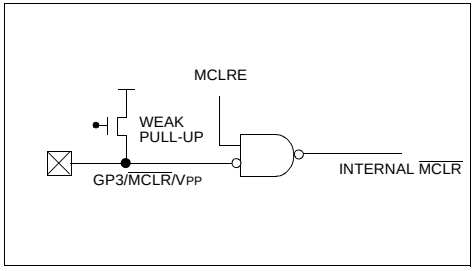

8.4 Power-On Reset (POR)

The PIC12C5XX family incorporates on-chip Power-On Reset (POR) circuitry which provides an internal chip reset for most power-up situations.

The on-chip POR circuit holds the chip in reset until VDD has reached a high enough level for proper operation. To take advantage of the internal POR, program the GP3/$\overline{\text{MCLR}}$/VPP pin as $\overline{\text{MCLR}}$ and tie through a resistor to VDD or program the pin as GP3. An internal weak pull-up resistor is implemented using a transistor. Refer to Table 11-1 for the pull-up resistor ranges. This will eliminate external RC components usually needed to create a Power-on Reset. A maximum rise time for VDD is specified. See Electrical Specifications for details.

When the device starts normal operation (exits the reset condition), device operating parameters (voltage, frequency, temperature, ...) must be met to ensure operation. If these conditions are not met, the device must be held in reset until the operating parameters are met.

A simplified block diagram of the on-chip Power-On Reset circuit is shown in Figure 8-8.

The Power-On Reset circuit and the Device Reset Timer (Section 8.5) circuit are closely related. On power-up, the reset latch is set and the DRT is reset. The DRT timer begins counting once it detects $\overline{\text{MCLR}}$ to be high. After the time-out period, which is typically 18 ms, it will reset the reset latch and thus end the on-chip reset signal.

A power-up example where $\overline{\text{MCLR}}$ is held low is shown in Figure 8-9. VDD is allowed to rise and stabilize before bringing $\overline{\text{MCLR}}$ high. The chip will actually come out of reset TDRT msec after $\overline{\text{MCLR}}$ goes high.

In Figure 8-10, the on-chip Power-On Reset feature is being used ($\overline{\text{MCLR}}$ and VDD are tied together or the pin is programmed to be GP3.). The VDD is stable before the start-up timer times out and there is no problem in getting a proper reset. However, Figure 8-11 depicts a problem situation where VDD rises too slowly. The time between when the DRT senses that $\overline{\text{MCLR}}$ is high and when $\overline{\text{MCLR}}$ (and VDD) actually reach their full value, is too long. In this situation, when the start-up timer times out, VDD has not reached the VDD (min) value and the chip is, therefore, not guaranteed to function correctly. For such situations, we recommend that external RC circuits be used to achieve longer POR delay times (Figure 8-10).

Note:	When the device starts normal operation (exits the reset condition), device operating parameters (voltage, frequency, temperature, etc.) must be meet to ensure operation. If these conditions are not met, the device must be held in reset until the operating conditions are met.

For additional information refer to Application Notes "*Power-Up Considerations*" - AN522 and "*Power-up Trouble Shooting*" - AN607.

© 1999 Microchip Technology Inc.

FIGURE 8-8: SIMPLIFIED BLOCK DIAGRAM OF ON-CHIP RESET CIRCUIT

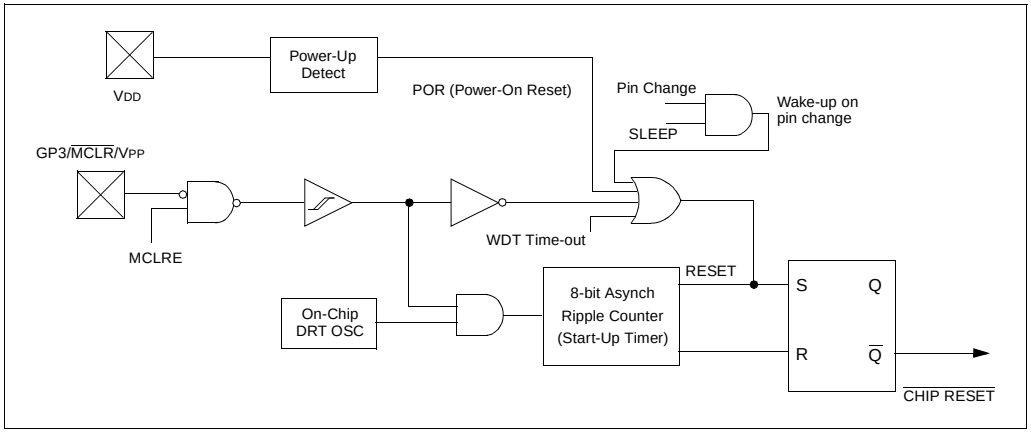

FIGURE 8-9: TIME-OUT SEQUENCE ON POWER-UP ($\overline{\text{MCLR}}$ PULLED LOW)

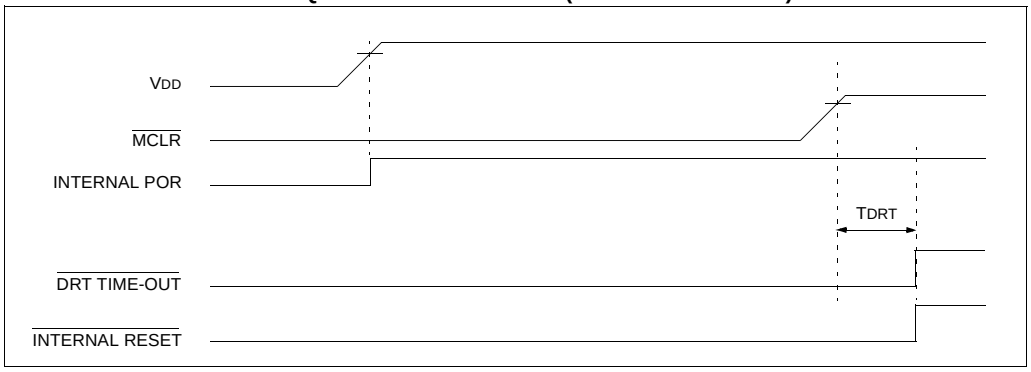

FIGURE 8-10: TIME-OUT SEQUENCE ON POWER-UP ($\overline{\text{MCLR}}$ TIED TO VDD): FAST VDD RISE TIME

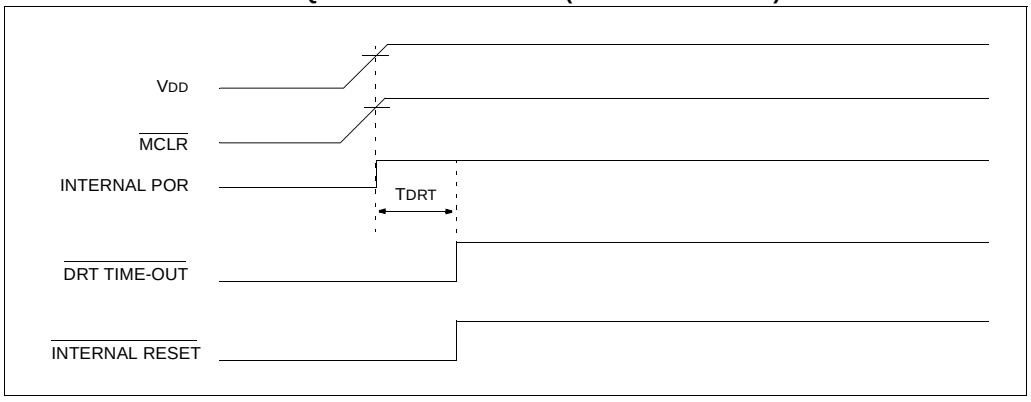

FIGURE 8-11: TIME-OUT SEQUENCE ON POWER-UP ($\overline{MCLR}$ TIED TO V_{DD}): SLOW V_{DD} RISE TIME

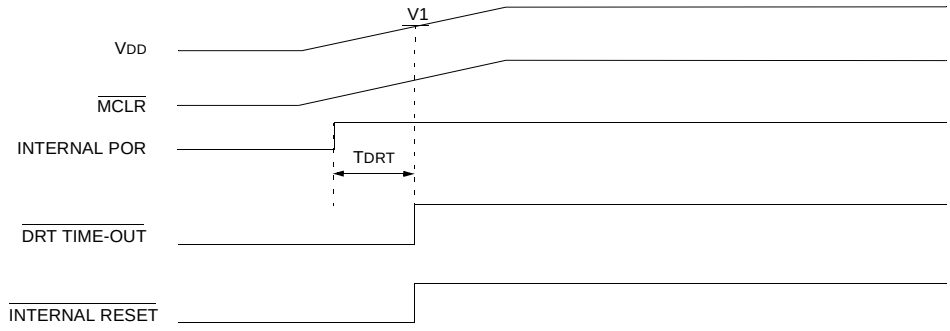

When V_{DD} rises slowly, the T_{DRT} time-out expires long before V_{DD} has reached its final value. In this example, the chip will reset properly if, and only if, V1 ≥ V_{DD} min.

8.5 Device Reset Timer (DRT)

In the PIC12C5XX, DRT runs from RESET and varies based on oscillator selection (see Table 8-5.)

The DRT operates on an internal RC oscillator. The processor is kept in RESET as long as the DRT is active. The DRT delay allows V_{DD} to rise above V_{DD} min., and for the oscillator to stabilize.

Oscillator circuits based on crystals or ceramic resonators require a certain time after power-up to establish a stable oscillation. The on-chip DRT keeps the device in a RESET condition for approximately 18 ms after $\overline{MCLR}$ has reached a logic high ($V_{IH}\overline{MCLR}$) level. Thus, programming GP3/$\overline{MCLR}$/V_{PP} as $\overline{MCLR}$ and using an external RC network connected to the $\overline{MCLR}$ input is not required in most cases, allowing for savings in cost-sensitive and/or space restricted applications, as well as allowing the use of the GP3/$\overline{MCLR}$/V_{PP} pin as a general purpose input.

The Device Reset time delay will vary from chip to chip due to V_{DD}, temperature, and process variation. See AC parameters for details.

The DRT will also be triggered upon a Watchdog Timer time-out. This is particularly important for applications using the WDT to wake from SLEEP mode automatically.

8.6 Watchdog Timer (WDT)

The Watchdog Timer (WDT) is a free running on-chip RC oscillator which does not require any external components. This RC oscillator is separate from the external RC oscillator of the GP5/OSC1/CLKIN pin and the internal 4 MHz oscillator. That means that the WDT will run even if the main processor clock has been stopped, for example, by execution of a SLEEP instruction. During normal operation or SLEEP, a WDT reset or wake-up reset generates a device RESET.

The $\overline{TO}$ bit (STATUS<4>) will be cleared upon a Watchdog Timer reset.

The WDT can be permanently disabled by programming the configuration bit WDTE as a ’0’ (Section 8.1). Refer to the PIC12C5XX Programming Specifications to determine how to access the configuration word.

TABLE 8-5: DRT (DEVICE RESET TIMER PERIOD)

Oscillator Configuration	POR Reset	Subsequent Resets
IntRC & ExtRC	18 ms (typical)	300 µs (typical)
XT & LP	18 ms (typical)	18 ms (typical)

© 1999 Microchip Technology Inc.

8.6.1 WDT PERIOD

The WDT has a nominal time-out period of 18 ms, (with no prescaler). If a longer time-out period is desired, a prescaler with a division ratio of up to 1:128 can be assigned to the WDT (under software control) by writing to the OPTION register. Thus, a time-out period of a nominal 2.3 seconds can be realized. These periods vary with temperature, V_{DD} and part-to-part process variations (see DC specs).

Under worst case conditions (V_{DD} = Min., Temperature = Max., max. WDT prescaler), it may take several seconds before a WDT time-out occurs.

8.6.2 WDT PROGRAMMING CONSIDERATIONS

The `CLRWDT` instruction clears the WDT and the postscaler, if assigned to the WDT, and prevents it from timing out and generating a device RESET.

The `SLEEP` instruction resets the WDT and the postscaler, if assigned to the WDT. This gives the maximum SLEEP time before a WDT wake-up reset.

FIGURE 8-12: WATCHDOG TIMER BLOCK DIAGRAM

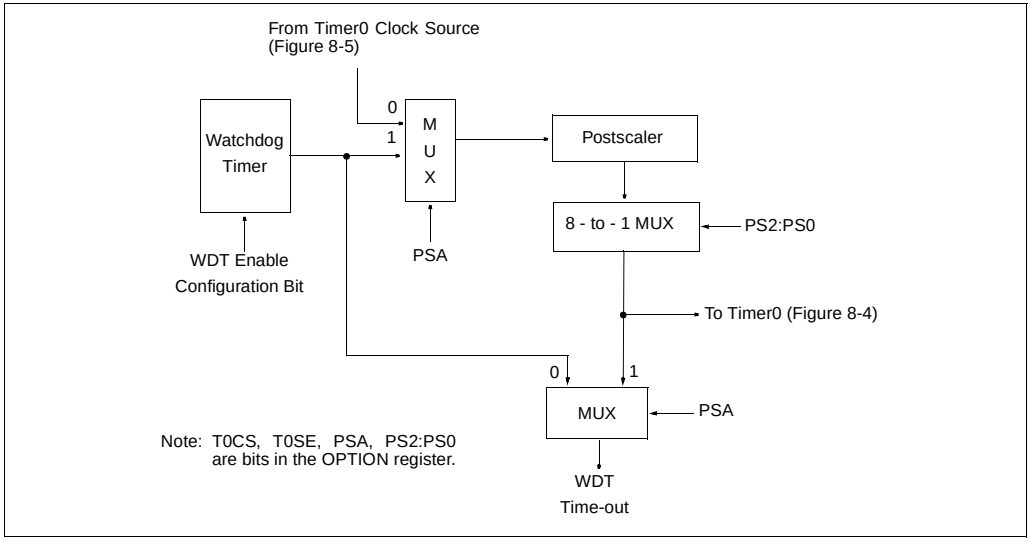

TABLE 8-6: SUMMARY OF REGISTERS ASSOCIATED WITH THE WATCHDOG TIMER

Address	Name	Bit 7	Bit 6	Bit 5	Bit 4	Bit 3	Bit 2	Bit 1	Bit 0	Value on Power-On Reset	Value on All Other Resets
N/A	OPTION	$\overline{GPWU}$	$\overline{GPPU}$	T0CS	T0SE	PSA	PS2	PS1	PS0	1111 1111	1111 1111

Legend: Shaded boxes = Not used by Watchdog Timer, – = unimplemented, read as '0', u = unchanged

8.7 Time-Out Sequence, Power Down, and Wake-up from SLEEP Status Bits (TO/PD/GPWUF)

The $\overline{TO}$, $\overline{PD}$, and GPWUF bits in the STATUS register can be tested to determine if a RESET condition has been caused by a power-up condition, a $\overline{MCLR}$ or Watchdog Timer (WDT) reset.

TABLE 8-7: $\overline{TO}$/$\overline{PD}$/GPWUF STATUS AFTER RESET

GPWUF	$\overline{TO}$	$\overline{PD}$	RESET caused by
0	0	0	WDT wake-up from SLEEP
0	0	u	WDT time-out (not from SLEEP)
0	1	0	$\overline{MCLR}$ wake-up from SLEEP
0	1	1	Power-up
0	u	u	$\overline{MCLR}$ not during SLEEP
1	1	0	Wake-up from SLEEP on pin change

Legend: u = unchanged

Note 1: The $\overline{TO}$, $\overline{PD}$, and GPWUF bits maintain their status (u) until a reset occurs. A low-pulse on the $\overline{MCLR}$ input does not change the $\overline{TO}$, $\overline{PD}$, and GPWUF status bits.

8.8 Reset on Brown-Out

A brown-out is a condition where device power (V_{DD}) dips below its minimum value, but not to zero, and then recovers. The device should be reset in the event of a brown-out.

To reset PIC12C5XX devices when a brown-out occurs, external brown-out protection circuits may be built, as shown in Figure 8-13 , Figure 8-14 and Figure 8-15

FIGURE 8-13: BROWN-OUT PROTECTION CIRCUIT 1

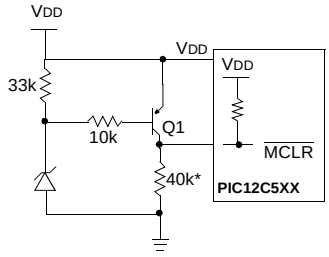

This circuit will activate reset when V_{DD} goes below Vz + 0.7V (where Vz = Zener voltage).

*Refer to Figure 8-7 and Table 11-1 for internal weak pull-up on $\overline{MCLR}$.

FIGURE 8-14: BROWN-OUT PROTECTION CIRCUIT 2

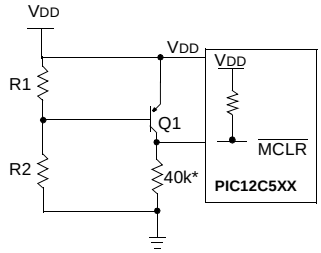

This brown-out circuit is less expensive, although less accurate. Transistor Q1 turns off when V_{DD} is below a certain level such that:

$$V_{DD} \cdot \frac{R1}{R1 + R2} = 0.7V$$

*Refer to Figure 8-7 and Table 11-1 for internal weak pull-up on $\overline{MCLR}$.

FIGURE 8-15: BROWN-OUT PROTECTION CIRCUIT 3

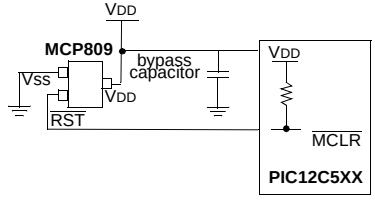

This brown-out protection circuit employs Microchip Technology's MCP809 microcontroller supervisor. The MCP8XX and MCP1XX family of supervisors provide push-pull and open collector outputs with both high and low active reset pins. There are 7 different trip point selections to accomodate 5V and 3V systems.

© 1999 Microchip Technology Inc.

8.9 Power-Down Mode (SLEEP)

A device may be powered down (SLEEP) and later powered up (Wake-up from SLEEP).

8.9.1 SLEEP

The Power-Down mode is entered by executing a SLEEP instruction.

If enabled, the Watchdog Timer will be cleared but keeps running, the $\overline{TO}$ bit (STATUS<4>) is set, the $\overline{PD}$ bit (STATUS<3>) is cleared and the oscillator driver is turned off. The I/O ports maintain the status they had before the SLEEP instruction was executed (driving high, driving low, or hi-impedance).

It should be noted that a RESET generated by a WDT time-out does not drive the $\overline{MCLR}$ pin low.

For lowest current consumption while powered down, the T0CKI input should be at V_{DD} or V_{SS} and the GP3/$\overline{MCLR}$/V_{PP} pin must be at a logic high level (V_{IHMC}) if $\overline{MCLR}$ is enabled.

8.9.2 WAKE-UP FROM SLEEP

The device can wake-up from SLEEP through one of the following events:

1. An external reset input on GP3/$\overline{MCLR}$/V_{PP} pin, when configured as $\overline{MCLR}$.
2. A Watchdog Timer time-out reset (if WDT was enabled).
3. A change on input pin GP0, GP1, or GP3/$\overline{MCLR}$/V_{PP} when wake-up on change is enabled.

These events cause a device reset. The $\overline{TO}$, $\overline{PD}$, and GPWUF bits can be used to determine the cause of device reset. The $\overline{TO}$ bit is cleared if a WDT time-out occurred (and caused wake-up). The $\overline{PD}$ bit, which is set on power-up, is cleared when SLEEP is invoked. The GPWUF bit indicates a change in state while in SLEEP at pins GP0, GP1, or GP3 (since the last time there was a file or bit operation on GP port).

Caution:	Right before entering SLEEP, read the input pins. When in SLEEP, wake up occurs when the values at the pins change from the state they were in at the last reading. If a wake-up on change occurs and the pins are not read before reentering SLEEP, a wake up will occur immediately even if no pins change while in SLEEP mode.

The WDT is cleared when the device wakes from sleep, regardless of the wake-up source.

8.10 Program Verification/Code Protection

If the code protection bit has not been programmed, the on-chip program memory can be read out for verification purposes.

The first 64 locations can be read by the PIC12C5XX regardless of the code protection bit setting.

The last memory location cannot be read if code protection is enabled on the PIC12C508/509.

The last memory location can be read regardless of the code protection bit setting on the PIC12C508A/509A/CR509A/CE518/CE519.

8.11 ID Locations

Four memory locations are designated as ID locations where the user can store checksum or other code-identification numbers. These locations are not accessible during normal execution but are readable and writable during program/verify.

Use only the lower 4 bits of the ID locations and always program the upper 8 bits as '0's.

8.12 In-Circuit Serial Programming

The PIC12C5XX microcontrollers with EPROM program memory can be serially programmed while in the end application circuit. This is simply done with two lines for clock and data, and three other lines for power, ground, and the programming voltage. This allows customers to manufacture boards with unprogrammed devices, and then program the microcontroller just before shipping the product. This also allows the most recent firmware or a custom firmware to be programmed.

The device is placed into a program/verify mode by holding the GP1 and GP0 pins low while raising the $\overline{MCLR}$ (V_{PP}) pin from V_{IL} to V_{IHH} (see programming specification). GP1 becomes the programming clock and GP0 becomes the programming data. Both GP1 and GP0 are Schmitt Trigger inputs in this mode.

After reset, a 6-bit command is then supplied to the device. Depending on the command, 14-bits of program data are then supplied to or from the device, depending if the command was a load or a read. For complete details of serial programming, please refer to the PIC12C5XX Programming Specifications.

A typical in-circuit serial programming connection is shown in Figure 8-16.

FIGURE 8-16: TYPICAL IN-CIRCUIT SERIAL PROGRAMMING CONNECTION

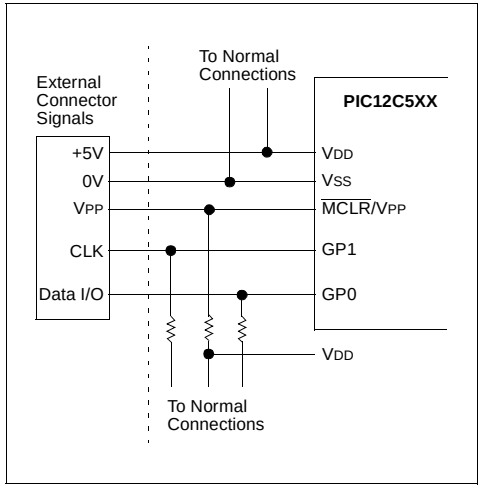

© 1999 Microchip Technology Inc.

9.0 INSTRUCTION SET SUMMARY

Each PIC12C5XX instruction is a 12-bit word divided into an OPCODE, which specifies the instruction type, and one or more operands which further specify the operation of the instruction. The PIC12C5XX instruction set summary in Table 9-2 groups the instructions into byte-oriented, bit-oriented, and literal and control operations. Table 9-1 shows the opcode field descriptions.

For **byte-oriented** instructions, 'f' represents a file register designator and 'd' represents a destination designator. The file register designator is used to specify which one of the 32 file registers is to be used by the instruction.

The destination designator specifies where the result of the operation is to be placed. If 'd' is '0', the result is placed in the W register. If 'd' is '1', the result is placed in the file register specified in the instruction.

For **bit-oriented** instructions, 'b' represents a bit field designator which selects the number of the bit affected by the operation, while 'f' represents the number of the file in which the bit is located.

For **literal and control** operations, 'k' represents an 8 or 9-bit constant or literal value.

TABLE 9-1: OPCODE FIELD DESCRIPTIONS

Field	Description
f	Register file address (0x00 to 0x7F)
W	Working register (accumulator)
b	Bit address within an 8-bit file register
k	Literal field, constant data or label
x	Don't care location (= 0 or 1) The assembler will generate code with x = 0. It is the recommended form of use for compatibility with all Microchip software tools.
d	Destination select; d = 0 (store result in W) d = 1 (store result in file register 'f') Default is d = 1
label	Label name
TOS	Top of Stack
PC	Program Counter
WDT	Watchdog Timer Counter
$\overline{TO}$	Time-Out bit
$\overline{PD}$	Power-Down bit
dest	Destination, either the W register or the specified register file location
[ ]	Options
( )	Contents
→	Assigned to
< >	Register bit field
∈	In the set of
italics	User defined term (font is courier)

All instructions are executed within a single instruction cycle, unless a conditional test is true or the program counter is changed as a result of an instruction. In this case, the execution takes two instruction cycles. One instruction cycle consists of four oscillator periods. Thus, for an oscillator frequency of 4 MHz, the normal instruction execution time is 1 µs. If a conditional test is true or the program counter is changed as a result of an instruction, the instruction execution time is 2 µs.

Figure 9-1 shows the three general formats that the instructions can have. All examples in the figure use the following format to represent a hexadecimal number:

0xhhh

where 'h' signifies a hexadecimal digit.

FIGURE 9-1: GENERAL FORMAT FOR INSTRUCTIONS

Byte-oriented file register operations

11 – 6	5	4 – 0
OPCODE	d	f (FILE #)

d = 0 for destination W
d = 1 for destination f
f = 5-bit file register address

Bit-oriented file register operations

11 – 8	7 – 5	4 – 0
OPCODE	b (BIT #)	f (FILE #)

b = 3-bit bit address
f = 5-bit file register address

Literal and control operations (except GOTO)

11 – 8	7 – 0
OPCODE	k (literal)

k = 8-bit immediate value

Literal and control operations - GOTO instruction

11 – 9	8 – 0
OPCODE	k (literal)

k = 9-bit immediate value

TABLE 9-2: INSTRUCTION SET SUMMARY

Mnemonic, Operands		Description	Cycles	12-Bit Opcode MSb		LSb	Status Affected	Notes
ADDWF	**f,d**	Add W and f	1	0001	11df	ffff	C,DC,Z	1,2,4
ANDWF	**f,d**	AND W with f	1	0001	01df	ffff	Z	2,4
CLRF	**f**	Clear f	1	0000	011f	ffff	Z	4
CLRW	**–**	Clear W	1	0000	0100	0000	Z	
COMF	**f, d**	Complement f	1	0010	01df	ffff	Z	
DECF	**f, d**	Decrement f	1	0000	11df	ffff	Z	2,4
DECFSZ	**f, d**	Decrement f, Skip if 0	1(2)	0010	11df	ffff	None	2,4
INCF	**f, d**	Increment f	1	0010	10df	ffff	Z	2,4
INCFSZ	**f, d**	Increment f, Skip if 0	1(2)	0011	11df	ffff	None	2,4
IORWF	**f, d**	Inclusive OR W with f	1	0001	00df	ffff	Z	2,4
MOVF	**f, d**	Move f	1	0010	00df	ffff	Z	2,4
MOVWF	**f**	Move W to f	1	0000	001f	ffff	None	1,4
NOP	**–**	No Operation	1	0000	0000	0000	None	
RLF	**f, d**	Rotate left f through Carry	1	0011	01df	ffff	C	2,4
RRF	**f, d**	Rotate right f through Carry	1	0011	00df	ffff	C	2,4
SUBWF	**f, d**	Subtract W from f	1	0000	10df	ffff	C,DC,Z	1,2,4
SWAPF	**f, d**	Swap f	1	0011	10df	ffff	None	2,4
XORWF	**f, d**	Exclusive OR W with f	1	0001	10df	ffff	Z	2,4
BIT-ORIENTED FILE REGISTER OPERATIONS								
BCF	**f, b**	Bit Clear f	1	0100	bbbf	ffff	None	2,4
BSF	**f, b**	Bit Set f	1	0101	bbbf	ffff	None	2,4
BTFSC	**f, b**	Bit Test f, Skip if Clear	1 (2)	0110	bbbf	ffff	None	
BTFSS	**f, b**	Bit Test f, Skip if Set	1 (2)	0111	bbbf	ffff	None	
LITERAL AND CONTROL OPERATIONS								
ANDLW	**k**	AND literal with W	1	1110	kkkk	kkkk	Z	
CALL	**k**	Call subroutine	2	1001	kkkk	kkkk	None	1
CLRWDT	**k**	Clear Watchdog Timer	1	0000	0000	0100	$\overline{TO}$, $\overline{PD}$	
GOTO	**k**	Unconditional branch	2	101k	kkkk	kkkk	None	
IORLW	**k**	Inclusive OR Literal with W	1	1101	kkkk	kkkk	Z	
MOVLW	**k**	Move Literal to W	1	1100	kkkk	kkkk	None	
OPTION	**–**	Load OPTION register	1	0000	0000	0010	None	
RETLW	**k**	Return, place Literal in W	2	1000	kkkk	kkkk	None	
SLEEP	**–**	Go into standby mode	1	0000	0000	0011	$\overline{TO}$, $\overline{PD}$	
TRIS	**f**	Load TRIS register	1	0000	0000	0fff	None	3
XORLW	**k**	Exclusive OR Literal to W	1	1111	kkkk	kkkk	Z	

Note 1: The 9th bit of the program counter will be forced to a '0' by any instruction that writes to the PC except for `GOTO`. (Section 4.6)

2: When an I/O register is modified as a function of itself (e.g. `MOVF GPIO, 1`), the value used will be that value present on the pins themselves. For example, if the data latch is '1' for a pin configured as input and is driven low by an external device, the data will be written back with a '0'.

3: The instruction `TRIS f`, where f = 6 causes the contents of the W register to be written to the tristate latches of GPIO. A '1' forces the pin to a hi-impedance state and disables the output buffers.

4: If this instruction is executed on the TMR0 register (and, where applicable, d = 1), the prescaler will be cleared (if assigned to TMR0).

© 1999 Microchip Technology Inc.

ADDWF **Add W and f**

Syntax: [*label*] ADDWF f,d

Operands: $0 \le f \le 31$
$d \in [0,1]$

Operation: (W) + (f) → (dest)

Status Affected: C, DC, Z

Encoding:

0001	11df	ffff

Description: Add the contents of the W register and register 'f'. If 'd' is 0 the result is stored in the W register. If 'd' is '1' the result is stored back in register 'f'.

Words: 1

Cycles: 1

Example: `ADDWF FSR, 0`

Before Instruction
W = 0x17
FSR = 0xC2

After Instruction
W = 0xD9
FSR = 0xC2

ANDLW **And literal with W**

Syntax: [*label*] ANDLW k

Operands: $0 \le k \le 255$

Operation: (W).AND. (k) → (W)

Status Affected: Z

Encoding:

1110	kkkk	kkkk

Description: The contents of the W register are AND'ed with the eight-bit literal 'k'. The result is placed in the W register.

Words: 1

Cycles: 1

Example: `ANDLW 0x5F`

Before Instruction
W = 0xA3

After Instruction
W = 0x03

ANDWF **AND W with f**

Syntax: [*label*] ANDWF f,d

Operands: $0 \le f \le 31$
$d \in [0,1]$

Operation: (W) .AND. (f) → (dest)

Status Affected: Z

Encoding:

0001	01df	ffff

Description: The contents of the W register are AND'ed with register 'f'. If 'd' is 0 the result is stored in the W register. If 'd' is '1' the result is stored back in register 'f'.

Words: 1

Cycles: 1

Example: `ANDWF FSR, 1`

Before Instruction
W = 0x17
FSR = 0xC2

After Instruction
W = 0x17
FSR = 0x02

BCF **Bit Clear f**

Syntax: [*label*] BCF f,b

Operands: $0 \le f \le 31$
$0 \le b \le 7$

Operation: 0 → (f<b>)

Status Affected: None

Encoding:

0100	bbbf	ffff

Description: Bit 'b' in register 'f' is cleared.

Words: 1

Cycles: 1

Example: `BCF FLAG_REG, 7`

Before Instruction
FLAG_REG = 0xC7

After Instruction
FLAG_REG = 0x47

© 1999 Microchip Technology Inc.

BSF — Bit Set f

Syntax:	[*label*] BSF f,b
Operands:	$0 \le f \le 31$ $0 \le b \le 7$
Operation:	$1 \rightarrow$ (f<b>)
Status Affected:	None
Encoding:	`0101` `bbbf` `ffff`
Description:	Bit 'b' in register 'f' is set.
Words:	1
Cycles:	1
Example:	`BSF FLAG_REG, 7`

Before Instruction
FLAG_REG = 0x0A

After Instruction
FLAG_REG = 0x8A

BTFSC — Bit Test f, Skip if Clear

Syntax:	[*label*] BTFSC f,b
Operands:	$0 \le f \le 31$ $0 \le b \le 7$
Operation:	skip if (f<b>) = 0
Status Affected:	None
Encoding:	`0110` `bbbf` `ffff`
Description:	If bit 'b' in register 'f' is 0 then the next instruction is skipped. If bit 'b' is 0 then the next instruction fetched during the current instruction execution is discarded, and an NOP is executed instead, making this a 2 cycle instruction.
Words:	1
Cycles:	1(2)

Example:	`HERE BTFSC FLAG,1`
	`FALSE GOTO PROCESS_CODE`
	`TRUE` •
	•
	•

Before Instruction
PC = address (HERE)

After Instruction
if FLAG<1> = 0,
PC = address (TRUE);
if FLAG<1> = 1,
PC = address(FALSE)

BTFSS — Bit Test f, Skip if Set

Syntax:	[*label*] BTFSS f,b
Operands:	$0 \le f \le 31$ $0 \le b < 7$
Operation:	skip if (f<b>) = 1
Status Affected:	None
Encoding:	`0111` `bbbf` `ffff`
Description:	If bit 'b' in register 'f' is '1' then the next instruction is skipped. If bit 'b' is '1', then the next instruction fetched during the current instruction execution, is discarded and an NOP is executed instead, making this a 2 cycle instruction.
Words:	1
Cycles:	1(2)

Example:	`HERE BTFSS FLAG,1`
	`FALSE GOTO PROCESS_CODE`
	`TRUE` •
	•
	•

Before Instruction
PC = address (HERE)

After Instruction
If FLAG<1> = 0,
PC = address (FALSE);
if FLAG<1> = 1,
PC = address (TRUE)

© 1999 Microchip Technology Inc.

CALL	Subroutine Call
Syntax:	[*label*] CALL k
Operands:	$0 \le k \le 255$
Operation:	(PC) + 1 → Top of Stack; k → PC<7:0>; (STATUS<6:5>) → PC<10:9>; 0 → PC<8>
Status Affected:	None
Encoding:	1001 | kkkk | kkkk
Description:	Subroutine call. First, return address (PC+1) is pushed onto the stack. The eight bit immediate address is loaded into PC bits <7:0>. The upper bits PC<10:9> are loaded from STATUS<6:5>, PC<8> is cleared. CALL is a two cycle instruction.
Words:	1
Cycles:	2
Example:	HERE CALL THERE

Before Instruction
PC = address (HERE)

After Instruction
PC = address (THERE)
TOS = address (HERE + 1)

CLRF	Clear f
Syntax:	[*label*] CLRF f
Operands:	$0 \le f \le 31$
Operation:	00h → (f); 1 → Z
Status Affected:	Z
Encoding:	0000 | 011f | ffff
Description:	The contents of register 'f' are cleared and the Z bit is set.
Words:	1
Cycles:	1
Example:	CLRF FLAG_REG

Before Instruction
FLAG_REG = 0x5A

After Instruction
FLAG_REG = 0x00
Z = 1

CLRW	Clear W
Syntax:	[*label*] CLRW
Operands:	None
Operation:	00h → (W); 1 → Z
Status Affected:	Z
Encoding:	0000 | 0100 | 0000
Description:	The W register is cleared. Zero bit (Z) is set.
Words:	1
Cycles:	1
Example:	CLRW

Before Instruction
W = 0x5A

After Instruction
W = 0x00
Z = 1

CLRWDT	Clear Watchdog Timer
Syntax:	[*label*] CLRWDT
Operands:	None
Operation:	00h → WDT; 0 → WDT prescaler (if assigned); 1 → $\overline{TO}$; 1 → $\overline{PD}$
Status Affected:	$\overline{TO}$, $\overline{PD}$
Encoding:	0000 | 0000 | 0100
Description:	The CLRWDT instruction resets the WDT. It also resets the prescaler, if the prescaler is assigned to the WDT and not Timer0. Status bits $\overline{TO}$ and $\overline{PD}$ are set.
Words:	1
Cycles:	1
Example:	CLRWDT

Before Instruction
WDT counter = ?

After Instruction
WDT counter = 0x00
WDT prescale = 0
$\overline{TO}$ = 1
$\overline{PD}$ = 1

COMF — Complement f

Syntax: [*label*] COMF f,d

Operands: $0 \le f \le 31$
$d \in [0,1]$

Operation: $(\bar{f}) \rightarrow$ (dest)

Status Affected: Z

Encoding:

0010	01df	ffff

Description: The contents of register 'f' are complemented. If 'd' is 0 the result is stored in the W register. If 'd' is 1 the result is stored back in register 'f'.

Words: 1

Cycles: 1

Example:
```
COMF    REG1,0
```

Before Instruction
```
REG1    =    0x13
```
After Instruction
```
REG1    =    0x13
W       =    0xEC
```

DECF — Decrement f

Syntax: [*label*] DECF f,d

Operands: $0 \le f \le 31$
$d \in [0,1]$

Operation: (f) – 1 → (dest)

Status Affected: Z

Encoding:

0000	11df	ffff

Description: Decrement register 'f'. If 'd' is 0 the result is stored in the W register. If 'd' is 1 the result is stored back in register 'f'.

Words: 1

Cycles: 1

Example:
```
DECF    CNT,    1
```

Before Instruction
```
CNT     =    0x01
Z       =    0
```
After Instruction
```
CNT     =    0x00
Z       =    1
```

DECFSZ — Decrement f, Skip if 0

Syntax: [*label*] DECFSZ f,d

Operands: $0 \le f \le 31$
$d \in [0,1]$

Operation: (f) – 1 → d; skip if result = 0

Status Affected: None

Encoding:

0010	11df	ffff

Description: The contents of register 'f' are decremented. If 'd' is 0 the result is placed in the W register. If 'd' is 1 the result is placed back in register 'f'.

If the result is 0, the next instruction, which is already fetched, is discarded and an NOP is executed instead making it a two cycle instruction.

Words: 1

Cycles: 1(2)

Example:
```
HERE      DECFSZ    CNT, 1
          GOTO      LOOP
CONTINUE  •
          •
          •
```

Before Instruction
```
PC      =    address  (HERE)
```
After Instruction
```
CNT     =    CNT - 1;
if CNT  =    0,
PC      =    address (CONTINUE);
if CNT  ≠    0,
PC      =    address (HERE+1)
```

GOTO — Unconditional Branch

Syntax: [*label*] GOTO k

Operands: $0 \le k \le 511$

Operation: k → PC<8:0>;
STATUS<6:5> → PC<10:9>

Status Affected: None

Encoding:

101k	kkkk	kkkk

Description: GOTO is an unconditional branch. The 9-bit immediate value is loaded into PC bits <8:0>. The upper bits of PC are loaded from STATUS<6:5>. GOTO is a two cycle instruction.

Words: 1

Cycles: 2

Example:
```
GOTO THERE
```

After Instruction
```
PC  =    address  (THERE)
```


© 1999 Microchip Technology Inc.

INCF — **Increment f**

Syntax: [*label*] INCF f,d

Operands: $0 \le f \le 31$
$d \in [0,1]$

Operation: (f) + 1 → (dest)

Status Affected: Z

Encoding:

0010	10df	ffff

Description: The contents of register 'f' are incremented. If 'd' is 0 the result is placed in the W register. If 'd' is 1 the result is placed back in register 'f'.

Words: 1

Cycles: 1

Example:
```
INCF    CNT,    1
```

Before Instruction
CNT = 0xFF
Z = 0

After Instruction
CNT = 0x00
Z = 1

INCFSZ — **Increment f, Skip if 0**

Syntax: [*label*] INCFSZ f,d

Operands: $0 \le f \le 31$
$d \in [0,1]$

Operation: (f) + 1 → (dest), skip if result = 0

Status Affected: None

Encoding:

0011	11df	ffff

Description: The contents of register 'f' are incremented. If 'd' is 0 the result is placed in the W register. If 'd' is 1 the result is placed back in register 'f'.

If the result is 0, then the next instruction, which is already fetched, is discarded and an NOP is executed instead making it a two cycle instruction.

Words: 1

Cycles: 1(2)

Example:
```
HERE     INCFSZ    CNT,  1
         GOTO      LOOP
CONTINUE •
         •
         •
```

Before Instruction
PC = address (HERE)

After Instruction
CNT = CNT + 1;
if CNT = 0,
PC = address (CONTINUE);
if CNT ≠ 0,
PC = address (HERE +1)

IORLW — **Inclusive OR literal with W**

Syntax: [*label*] IORLW k

Operands: $0 \le k \le 255$

Operation: (W) .OR. (k) → (W)

Status Affected: Z

Encoding:

1101	kkkk	kkkk

Description: The contents of the W register are OR'ed with the eight bit literal 'k'. The result is placed in the W register.

Words: 1

Cycles: 1

Example:
```
IORLW   0x35
```

Before Instruction
W = 0x9A

After Instruction
W = 0xBF
Z = 0

IORWF — **Inclusive OR W with f**

Syntax: [*label*] IORWF f,d

Operands: $0 \le f \le 31$
$d \in [0,1]$

Operation: (W).OR. (f) → (dest)

Status Affected: Z

Encoding:

0001	00df	ffff

Description: Inclusive OR the W register with register 'f'. If 'd' is 0 the result is placed in the W register. If 'd' is 1 the result is placed back in register 'f'.

Words: 1

Cycles: 1

Example:
```
IORWF           RESULT, 0
```

Before Instruction
RESULT = 0x13
W = 0x91

After Instruction
RESULT = 0x13
W = 0x93
Z = 0

MOVF	Move f
Syntax:	[*label*] MOVF f,d
Operands:	$0 \le f \le 31$ $d \in [0,1]$
Operation:	(f) → (dest)
Status Affected:	Z
Encoding:	`0010` `00df` `ffff`
Description:	The contents of register 'f' is moved to destination 'd'. If 'd' is 0, destination is the W register. If 'd' is 1, the destination is file register 'f'. 'd' is 1 is useful to test a file register since status flag Z is affected.
Words:	1
Cycles:	1
Example:	`MOVF FSR, 0`

After Instruction
W = value in FSR register

MOVLW	Move Literal to W
Syntax:	[*label*] MOVLW k
Operands:	$0 \le k \le 255$
Operation:	k → (W)
Status Affected:	None
Encoding:	`1100` `kkkk` `kkkk`
Description:	The eight bit literal 'k' is loaded into the W register. The don't cares will assemble as 0s.
Words:	1
Cycles:	1
Example:	`MOVLW 0x5A`

After Instruction
W = 0x5A

MOVWF	Move W to f
Syntax:	[*label*] MOVWF f
Operands:	$0 \le f \le 31$
Operation:	(W) → (f)
Status Affected:	None
Encoding:	`0000` `001f` `ffff`
Description:	Move data from the W register to register 'f'.
Words:	1
Cycles:	1
Example:	`MOVWF TEMP_REG`

Before Instruction
TEMP_REG = 0xFF
W = 0x4F

After Instruction
TEMP_REG = 0x4F
W = 0x4F

NOP	No Operation
Syntax:	[*label*] NOP
Operands:	None
Operation:	No operation
Status Affected:	None
Encoding:	`0000` `0000` `0000`
Description:	No operation.
Words:	1
Cycles:	1
Example:	`NOP`

© 1999 Microchip Technology Inc.

OPTION — Load OPTION Register

Syntax:	[*label*] OPTION
Operands:	None
Operation:	(W) → OPTION
Status Affected:	None
Encoding:	0000 | 0000 | 0010
Description:	The content of the W register is loaded into the OPTION register.
Words:	1
Cycles:	1
Example	`OPTION`

Before Instruction
W = 0x07

After Instruction
OPTION = 0x07

RETLW — Return with Literal in W

Syntax:	[*label*] RETLW k
Operands:	0 ≤ k ≤ 255
Operation:	k → (W); TOS → PC
Status Affected:	None
Encoding:	1000 | kkkk | kkkk
Description:	The W register is loaded with the eight bit literal 'k'. The program counter is loaded from the top of the stack (the return address). This is a two cycle instruction.
Words:	1
Cycles:	2

Example:

```
CALL TABLE ;W contains
           ;table offset
           ;value.
•          ;W now has table
•          ;value.
•
TABLE      ADDWF PC   ;W = offset
           RETLW k1   ;Begin table
           RETLW k2   ;
           •
           •
           •
           RETLW kn   ; End of table
```

Before Instruction
W = 0x07

After Instruction
W = value of k8

RLF — Rotate Left f through Carry

Syntax:	[*label*] RLF f,d
Operands:	0 ≤ f ≤ 31 d ∈ [0,1]
Operation:	See description below
Status Affected:	C
Encoding:	0011 | 01df | ffff
Description:	The contents of register 'f' are rotated one bit to the left through the Carry Flag. If 'd' is 0 the result is placed in the W register. If 'd' is 1 the result is stored back in register 'f'.

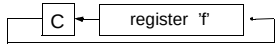

Words:	1
Cycles:	1
Example:	`RLF REG1,0`

Before Instruction
REG1 = 1110 0110
C = 0

After Instruction
REG1 = 1110 0110
W = 1100 1100
C = 1

RRF — Rotate Right f through Carry

Syntax:	[*label*] RRF f,d
Operands:	0 ≤ f ≤ 31 d ∈ [0,1]
Operation:	See description below
Status Affected:	C
Encoding:	0011 | 00df | ffff
Description:	The contents of register 'f' are rotated one bit to the right through the Carry Flag. If 'd' is 0 the result is placed in the W register. If 'd' is 1 the result is placed back in register 'f'.

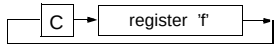

Words:	1
Cycles:	1
Example:	`RRF REG1,0`

Before Instruction
REG1 = 1110 0110
C = 0

After Instruction
REG1 = 1110 0110
W = 0111 0011
C = 0

SLEEP — Enter SLEEP Mode

Syntax:	[*label*] SLEEP
Operands:	None
Operation:	00h → WDT; 0 → WDT prescaler; 1 → $\overline{TO}$; 0 → $\overline{PD}$
Status Affected:	$\overline{TO}$, $\overline{PD}$, GPWUF
Encoding:	0000 | 0000 | 0011
Description:	Time-out status bit ($\overline{TO}$) is set. The power down status bit ($\overline{PD}$) is cleared. GPWUF is unaffected. The WDT and its prescaler are cleared. The processor is put into SLEEP mode with the oscillator stopped. See section on SLEEP for more details.
Words:	1
Cycles:	1
Example:	SLEEP

SUBWF — Subtract W from f

Syntax:	[*label*] SUBWF f,d
Operands:	$0 \le f \le 31$ $d \in [0,1]$
Operation:	(f) – (W) → (dest)
Status Affected:	C, DC, Z
Encoding:	0000 | 10df | ffff
Description:	Subtract (2's complement method) the W register from register 'f'. If 'd' is 0 the result is stored in the W register. If 'd' is 1 the result is stored back in register 'f'.
Words:	1
Cycles:	1

Example 1: `SUBWF REG1, 1`

Before Instruction
```
REG1 =  3
W    =  2
C    =  ?
```
After Instruction
```
REG1 =  1
W    =  2
C    =  1     ; result is positive
```

Example 2:

Before Instruction
```
REG1 =  2
W    =  2
C    =  ?
```
After Instruction
```
REG1 =  0
W    =  2
C    =  1     ; result is zero
```

Example 3:

Before Instruction
```
REG1 =  1
W    =  2
C    =  ?
```
After Instruction
```
REG1 =  FF
W    =  2
C    =  0     ; result is negative
```


© 1999 Microchip Technology Inc.

SWAPF — **Swap Nibbles in f**

Syntax: [*label*] SWAPF f,d

Operands: $0 \le f \le 31$
$d \in [0,1]$

Operation: (f<3:0>) → (dest<7:4>);
(f<7:4>) → (dest<3:0>)

Status Affected: None

Encoding:

0011	10df	ffff

Description: The upper and lower nibbles of register 'f' are exchanged. If 'd' is 0 the result is placed in W register. If 'd' is 1 the result is placed in register 'f'.

Words: 1

Cycles: 1

Example `SWAPF REG1, 0`

Before Instruction
REG1 = 0xA5

After Instruction
REG1 = 0xA5
W = 0X5A

TRIS — **Load TRIS Register**

Syntax: [*label*] TRIS f

Operands: f = 6

Operation: (W) → TRIS register f

Status Affected: None

Encoding:

0000	0000	0fff

Description: TRIS register 'f' (f = 6) is loaded with the contents of the W register

Words: 1

Cycles: 1

Example `TRIS GPIO`

Before Instruction
W = 0XA5

After Instruction
TRIS = 0XA5

Note: f = 6 for PIC12C5XX only.

XORLW — **Exclusive OR literal with W**

Syntax: [*label*] XORLW k

Operands: $0 \le k \le 255$

Operation: (W) .XOR. k → (W)

Status Affected: Z

Encoding:

1111	kkkk	kkkk

Description: The contents of the W register are XOR'ed with the eight bit literal 'k'. The result is placed in the W register.

Words: 1

Cycles: 1

Example `XORLW 0xAF`

Before Instruction
W = 0xB5

After Instruction
W = 0x1A

XORWF — **Exclusive OR W with f**

Syntax: [*label*] XORWF f,d

Operands: $0 \le f \le 31$
$d \in [0,1]$

Operation: (W) .XOR. (f) → (dest)

Status Affected: Z

Encoding:

0001	10df	ffff

Description: Exclusive OR the contents of the W register with register 'f'. If 'd' is 0 the result is stored in the W register. If 'd' is 1 the result is stored back in register 'f'.

Words: 1

Cycles: 1

Example `XORWF REG,1`

Before Instruction
REG = 0xAF
W = 0xB5

After Instruction
REG = 0x1A
W = 0xB5

© 1999 Microchip Technology Inc.

NOTES:

© 1999 Microchip Technology Inc.

10.0 DEVELOPMENT SUPPORT

10.1 Development Tools

The PICmicro® microcontrollers are supported with a full range of hardware and software development tools:

- MPLAB™-ICE Real-Time In-Circuit Emulator
- ICEPIC™ Low-Cost PIC16C5X and PIC16CXXX In-Circuit Emulator
- PRO MATE® II Universal Programmer
- PICSTART® Plus Entry-Level Prototype Programmer
- SIMICE
- PICDEM-1 Low-Cost Demonstration Board
- PICDEM-2 Low-Cost Demonstration Board
- PICDEM-3 Low-Cost Demonstration Board
- MPASM Assembler
- MPLAB™ SIM Software Simulator
- MPLAB-C17 (C Compiler)
- Fuzzy Logic Development System (*fuzzy*TECH®–MP)
- KEELOQ® Evaluation Kits and Programmer

10.2 MPLAB-ICE: High Performance Universal In-Circuit Emulator with MPLAB IDE

The MPLAB-ICE Universal In-Circuit Emulator is intended to provide the product development engineer with a complete microcontroller design tool set for PICmicro® microcontrollers (MCUs). MPLAB-ICE is supplied with the MPLAB Integrated Development Environment (IDE), which allows editing, “make” and download, and source debugging from a single environment.

Interchangeable processor modules allow the system to be easily reconfigured for emulation of different processors. The universal architecture of the MPLAB-ICE allows expansion to support all new Microchip microcontrollers.

The MPLAB-ICE Emulator System has been designed as a real-time emulation system with advanced features that are generally found on more expensive development tools. The PC compatible 386 (and higher) machine platform and Microsoft Windows® 3.x or Windows 95 environment were chosen to best make these features available to you, the end user.

MPLAB-ICE is available in two versions. MPLAB-ICE 1000 is a basic, low-cost emulator system with simple trace capabilities. It shares processor modules with the MPLAB-ICE 2000. This is a full-featured emulator system with enhanced trace, trigger, and data monitoring features. Both systems will operate across the entire operating speed range of the PICmicro® MCU.

10.3 ICEPIC: Low-Cost PICmicro® In-Circuit Emulator

ICEPIC is a low-cost in-circuit emulator solution for the Microchip PIC12CXXX, PIC16C5X and PIC16CXXX families of 8-bit OTP microcontrollers.

ICEPIC is designed to operate on PC-compatible machines ranging from 386 through Pentium™ based machines under Windows 3.x, Windows 95, or Windows NT environment. ICEPIC features real time, non-intrusive emulation.

10.4 PRO MATE II: Universal Programmer

The PRO MATE II Universal Programmer is a full-featured programmer capable of operating in stand-alone mode as well as PC-hosted mode. PRO MATE II is CE compliant.

The PRO MATE II has programmable V_{DD} and V_{PP} supplies which allows it to verify programmed memory at V_{DD} min and V_{DD} max for maximum reliability. It has an LCD display for displaying error messages, keys to enter commands and a modular detachable socket assembly to support various package types. In stand-alone mode the PRO MATE II can read, verify or program PIC12CXXX, PIC14C000, PIC16C5X, PIC16CXXX and PIC17CXX devices. It can also set configuration and code-protect bits in this mode.

10.5 PICSTART Plus Entry Level Development System

The PICSTART programmer is an easy-to-use, low-cost prototype programmer. It connects to the PC via one of the COM (RS-232) ports. MPLAB Integrated Development Environment software makes using the programmer simple and efficient. PICSTART Plus is not recommended for production programming.

PICSTART Plus supports all PIC12CXXX, PIC14C000, PIC16C5X, PIC16CXXX and PIC17CXX devices with up to 40 pins. Larger pin count devices such as the PIC16C923, PIC16C924 and PIC17C756 may be supported with an adapter socket. PICSTART Plus is CE compliant.

© 1999 Microchip Technology Inc.

10.6 SIMICE Entry-Level Hardware Simulator

SIMICE is an entry-level hardware development system designed to operate in a PC-based environment with Microchip's simulator MPLAB™-SIM. Both SIMICE and MPLAB-SIM run under Microchip Technology's MPLAB Integrated Development Environment (IDE) software. Specifically, SIMICE provides hardware simulation for Microchip's PIC12C5XX, PIC12CE5XX, and PIC16C5X families of PICmicro® 8-bit microcontrollers. SIMICE works in conjunction with MPLAB-SIM to provide non-real-time I/O port emulation. SIMICE enables a developer to run simulator code for driving the target system. In addition, the target system can provide input to the simulator code. This capability allows for simple and interactive debugging without having to manually generate MPLAB-SIM stimulus files. SIMICE is a valuable debugging tool for entry-level system development.

10.7 PICDEM-1 Low-Cost PICmicro® Demonstration Board

The PICDEM-1 is a simple board which demonstrates the capabilities of several of Microchip's microcontrollers. The microcontrollers supported are: PIC16C5X (PIC16C54 to PIC16C58A), PIC16C61, PIC16C62X, PIC16C71, PIC16C8X, PIC17C42, PIC17C43 and PIC17C44. All necessary hardware and software is included to run basic demo programs. The users can program the sample microcontrollers provided with the PICDEM-1 board, on a PRO MATE II or PICSTART-Plus programmer, and easily test firmware. The user can also connect the PICDEM-1 board to the MPLAB-ICE emulator and download the firmware to the emulator for testing. Additional prototype area is available for the user to build some additional hardware and connect it to the microcontroller socket(s). Some of the features include an RS-232 interface, a potentiometer for simulated analog input, push-button switches and eight LEDs connected to PORTB.

10.8 PICDEM-2 Low-Cost PIC16CXX Demonstration Board

The PICDEM-2 is a simple demonstration board that supports the PIC16C62, PIC16C64, PIC16C65, PIC16C73 and PIC16C74 microcontrollers. All the necessary hardware and software is included to run the basic demonstration programs. The user can program the sample microcontrollers provided with the PICDEM-2 board, on a PRO MATE II programmer or PICSTART-Plus, and easily test firmware. The MPLAB-ICE emulator may also be used with the PICDEM-2 board to test firmware. Additional prototype area has been provided to the user for adding additional hardware and connecting it to the microcontroller socket(s). Some of the features include a RS-232 interface, push-button switches, a potentiometer for simulated analog input, a Serial EEPROM to demonstrate usage of the I^2C bus and separate headers for connection to an LCD module and a keypad.

10.9 PICDEM-3 Low-Cost PIC16CXXX Demonstration Board

The PICDEM-3 is a simple demonstration board that supports the PIC16C923 and PIC16C924 in the PLCC package. It will also support future 44-pin PLCC microcontrollers with a LCD Module. All the necessary hardware and software is included to run the basic demonstration programs. The user can program the sample microcontrollers provided with the PICDEM-3 board, on a PRO MATE II programmer or PICSTART Plus with an adapter socket, and easily test firmware. The MPLAB-ICE emulator may also be used with the PICDEM-3 board to test firmware. Additional prototype area has been provided to the user for adding hardware and connecting it to the microcontroller socket(s). Some of the features include an RS-232 interface, push-button switches, a potentiometer for simulated analog input, a thermistor and separate headers for connection to an external LCD module and a keypad. Also provided on the PICDEM-3 board is an LCD panel, with 4 commons and 12 segments, that is capable of displaying time, temperature and day of the week. The PICDEM-3 provides an additional RS-232 interface and Windows 3.1 software for showing the demultiplexed LCD signals on a PC. A simple serial interface allows the user to construct a hardware demultiplexer for the LCD signals.

© 1999 Microchip Technology Inc.

10.10 MPLAB Integrated Development Environment Software

The MPLAB IDE Software brings an ease of software development previously unseen in the 8-bit microcontroller market. MPLAB is a windows based application which contains:

- A full featured editor
- Three operating modes
  - editor
  - emulator
  - simulator
- A project manager
- Customizable tool bar and key mapping
- A status bar with project information
- Extensive on-line help

MPLAB allows you to:

- Edit your source files (either assembly or ‘C’)
- One touch assemble (or compile) and download to PICmicro® tools (automatically updates all project information)
- Debug using:
  - source files
  - absolute listing file

The ability to use MPLAB with Microchip’s simulator allows a consistent platform and the ability to easily switch from the low cost simulator to the full featured emulator with minimal retraining due to development tools.

10.11 Assembler (MPASM)

The MPASM Universal Macro Assembler is a PC-hosted symbolic assembler. It supports all microcontroller series including the PIC12C5XX, PIC14000, PIC16C5X, PIC16CXXX, and PIC17CXX families.

MPASM offers full featured Macro capabilities, conditional assembly, and several source and listing formats. It generates various object code formats to support Microchip's development tools as well as third party programmers.

MPASM allows full symbolic debugging from MPLAB-ICE, Microchip’s Universal Emulator System.

MPASM has the following features to assist in developing software for specific use applications.

- Provides translation of Assembler source code to object code for all Microchip microcontrollers.
- Macro assembly capability.
- Produces all the files (Object, Listing, Symbol, and special) required for symbolic debug with Microchip’s emulator systems.
- Supports Hex (default), Decimal and Octal source and listing formats.

MPASM provides a rich directive language to support programming of the PICmicro®. Directives are helpful in making the development of your assemble source code shorter and more maintainable.

10.12 Software Simulator (MPLAB-SIM)

The MPLAB-SIM Software Simulator allows code development in a PC host environment. It allows the user to simulate the PICmicro® series microcontrollers on an instruction level. On any given instruction, the user may examine or modify any of the data areas or provide external stimulus to any of the pins. The input/output radix can be set by the user and the execution can be performed in; single step, execute until break, or in a trace mode.

MPLAB-SIM fully supports symbolic debugging using MPLAB-C17 and MPASM. The Software Simulator offers the low cost flexibility to develop and debug code outside of the laboratory environment making it an excellent multi-project software development tool.

10.13 MPLAB-C17 Compiler

The MPLAB-C17 Code Development System is a complete ANSI ‘C’ compiler and integrated development environment for Microchip’s PIC17CXXX family of microcontrollers. The compiler provides powerful integration capabilities and ease of use not found with other compilers.

For easier source level debugging, the compiler provides symbol information that is compatible with the MPLAB IDE memory display.

10.14 Fuzzy Logic Development System (*fuzzy*TECH-MP)

*fuzzy*TECH-MP fuzzy logic development tool is available in two versions - a low cost introductory version, MP Explorer, for designers to gain a comprehensive working knowledge of fuzzy logic system design; and a full-featured version, *fuzzy*TECH-MP, Edition for implementing more complex systems.

Both versions include Microchip’s *fuzzy*LAB™ demonstration board for hands-on experience with fuzzy logic systems implementation.

10.15 SEEVAL® Evaluation and Programming System

The SEEVAL SEEPROM Designer’s Kit supports all Microchip 2-wire and 3-wire Serial EEPROMs. The kit includes everything necessary to read, write, erase or program special features of any Microchip SEEPROM product including Smart Serials™ and secure serials. The Total Endurance™ Disk is included to aid in trade-off analysis and reliability calculations. The total kit can significantly reduce time-to-market and result in an optimized system.

© 1999 Microchip Technology Inc.

10.16 KEELOQ® Evaluation and Programming Tools

KEELOQ evaluation and programming tools support Microchips HCS Secure Data Products. The HCS evaluation kit includes an LCD display to show changing codes, a decoder to decode transmissions, and a programming interface to program test transmitters.

© 1999 Microchip Technology Inc.

TABLE 10-1: DEVELOPMENT TOOLS FROM MICROCHIP

		PIC12C5XX	PIC14000	PIC16C5X	PIC16CXXX	PIC16C6X	PIC16C7XX	PIC16C8X	PIC16C9XX	PIC17C4X	PIC17C7XX	24CXX 25CXX 93CXX	HCS200 HCS300 HCS301
Emulator Products	MPLAB™-ICE	✓	✓	✓	✓	✓	✓	✓	✓	✓	✓		
	ICEPIC™ Low-Cost In-Circuit Emulator			✓	✓	✓	✓	✓	✓				
Software Tools	MPLAB™ Integrated Development Environment	✓	✓	✓	✓	✓	✓	✓	✓	✓	✓		
	MPLAB™ C17* Compiler									✓	✓		
	*fuzzy*TECH®-MP Explorer/Edition Fuzzy Logic Dev. Tool	✓	✓	✓	✓	✓	✓	✓	✓	✓			
	Total Endurance™ Software Model											✓	
Programmers	PICSTART® Plus Low-Cost Universal Dev. Kit	✓	✓	✓	✓	✓	✓	✓	✓	✓	✓		
	PRO MATE® II Universal Programmer	✓	✓	✓	✓	✓	✓	✓	✓	✓	✓	✓	✓
	KEELOQ® Programmer												✓
Demo Boards	SEEVAL® Designers Kit											✓	
	SIMICE	✓		✓									
	PICDEM-14A		✓										
	PICDEM-1			✓	✓			✓		✓			
	PICDEM-2					✓	✓						
	PICDEM-3								✓				
	KEELOQ® Evaluation Kit												✓
	KEELOQ Transponder Kit												✓

NOTES:

© 1999 Microchip Technology Inc.

11.0 ELECTRICAL CHARACTERISTICS - PIC12C508/PIC12C509

Absolute Maximum Ratings†

Ambient Temperature under bias ..... –40°C to +125°C

Storage Temperature ..... –65°C to +150°C

Voltage on V_{DD} with respect to V_{SS} ..... 0 to +7.5 V

Voltage on $\overline{MCLR}$ with respect to V_{SS} ..... 0 to +14 V

Voltage on all other pins with respect to V_{SS} ..... –0.6 V to (V_{DD} + 0.6 V)

Total Power Dissipation(1) ..... 700 mW

Max. Current out of V_{SS} pin ..... 200 mA

Max. Current into V_{DD} pin ..... 150 mA

Input Clamp Current, I_{IK} (V_I < 0 or V_I > V_{DD}) ..... ±20 mA

Output Clamp Current, I_{OK} (V_O < 0 or V_O > V_{DD}) ..... ±20 mA

Max. Output Current sunk by any I/O pin ..... 25 mA

Max. Output Current sourced by any I/O pin ..... 25 mA

Max. Output Current sourced by I/O port (GPIO) ..... 100 mA

Max. Output Current sunk by I/O port (GPIO) ..... 100 mA

Note 1: Power Dissipation is calculated as follows: $P_{DIS} = V_{DD} \times \{I_{DD} - \sum I_{OH}\} + \sum \{(V_{DD}-V_{OH}) \times I_{OH}\} + \sum(V_{OL} \times I_{OL})$

†NOTICE: Stresses above those listed under "Maximum Ratings" may cause permanent damage to the device. This is a stress rating only and functional operation of the device at those or any other conditions above those indicated in the operation listings of this specification is not implied. Exposure to maximum rating conditions for extended periods may affect device reliability.

11.1 DC CHARACTERISTICS: PIC12C508/509 (Commercial, Industrial, Extended)

DC Characteristics Power Supply Pins							Standard Operating Conditions (unless otherwise specified) Operating Temperature 0°C ≤ TA ≤ +70°C (commercial) –40°C ≤ TA ≤ +85°C (industrial) –40°C ≤ TA ≤ +125°C (extended)
Parm No.	**Characteristic**	**Sym**	**Min**	**Typ(1)**	**Max**	**Units**	**Conditions**
D001	**Supply Voltage**	VDD	2.5		5.5	V	FOSC = DC to 4 MHz (Commercial/ Industrial)
			3.0		5.5	V	FOSC = DC to 4 MHz (Extended)
D002	**RAM Data Retention Voltage(2)**	VDR		1.5*		V	Device in SLEEP mode
D003	**VDD Start Voltage to ensure Power-on Reset**	VPOR		VSS		V	See section on Power-on Reset for details
D004	**VDD Rise Rate to ensure Power-on Reset**	SVDD	0.05 *			V/ms	See section on Power-on Reset for details
	Supply Current(3)						
D010		IDD	—	.78	2.4	mA	XT and EXTRC options (4) FOSC = 4 MHz, VDD = 5.5V
D010C			—	1.1	2.4	mA	INTRC Option FOSC = 4 MHz, VDD = 5.5V
D010A			—	10	27	µA	LP OPTION, Commercial Temperature FOSC = 32 kHz, VDD = 3.0V, WDT disabled
			—	14	35	µA	LP OPTION, Industrial Temperature FOSC = 32 kHz, VDD = 3.0V, WDT disabled
			—	14	35	µA	LP OPTION, Extended Temperature FOSC = 32 kHz, VDD = 3.0V, WDT disabled
	Power-Down Current (5)						
D020		IPD	—	0.25	4	µA	VDD = 3.0V, Commercial WDT disabled
D021			—	0.25	5	µA	VDD = 3.0V, Industrial WDT disabled
D021B			—	2	18	µA	VDD = 3.0V, Extended WDT disabled
D022		ΔIWDT	—	3.75	8	µA	VDD = 3.0V, Commercial
			—	3.75	9	µA	VDD = 3.0V, Industrial
			—	3.75	14	µA	VDD = 3.0V, Extended

* These parameters are characterized but not tested.

Note 1: Data in the Typical ("Typ") column is based on characterization results at 25°C. This data is for design guidance only and is not tested.

2: This is the limit to which VDD can be lowered in SLEEP mode without losing RAM data.

3: The supply current is mainly a function of the operating voltage and frequency. Other factors such as bus loading, oscillator type, bus rate, internal code execution pattern, and temperature also have an impact on the current consumption.

a) The test conditions for all IDD measurements in active operation mode are: OSC1 = external square wave, from rail-to-rail; all I/O pins tristated, pulled to VSS, T0CKI = VDD, $\overline{MCLR}$ = VDD; WDT enabled/disabled as specified.

b) For standby current measurements, the conditions are the same, except that the device is in SLEEP mode.

4: Does not include current through Rext. The current through the resistor can be estimated by the formula: IR = VDD/2Rext (mA) with Rext in kOhm.

5: The power down current in SLEEP mode does not depend on the oscillator type. Power down current is measured with the part in SLEEP mode, with all I/O pins in hi-impedance state and tied to VDD or VSS.

© 1999 Microchip Technology Inc.

11.2 DC CHARACTERISTICS: PIC12C508/509 (Commercial, Industrial, Extended)

DC CHARACTERISTICS			**Standard Operating Conditions (unless otherwise specified)** Operating temperature 0°C ≤ TA ≤ +70°C (commercial) –40°C ≤ TA ≤ +85°C (industrial) –40°C ≤ TA ≤ +125°C (extended) Operating voltage VDD range as described in DC spec Section 11.1 and Section 11.2.				
Param No.	**Characteristic**	**Sym**	**Min**	**Typ†**	**Max**	**Units**	**Conditions**
	Input Low Voltage						
	I/O ports	VIL		-			
D030	with TTL buffer		VSS	-	0.8V	V	4.5 < VDD ≤ 5.5V
				-	0.15VDD	V	otherwise
D031	with Schmitt Trigger buffer		VSS	-	0.15VDD	V	
D032	$\overline{\text{MCLR}}$, GP2/T0CKI (in EXTRC mode)		VSS	-	0.15VDD	V	
D033	OSC1 (EXTRC) (1)		VSS	-	0.15VDD		
D033	OSC1 (in XT and LP)		VSS	-	0.3VDD	V	Note1
	Input High Voltage						
	I/O ports	VIH		-			
D040	with TTL buffer	VSS	2.0V	-	VDD	V	4.5 ≤ VDD ≤ 5.5V
D040A			0.25VDD + 0.8V	-	VDD	V	otherwise
D041	with Schmitt Trigger buffer		0.85VDD	-	VDD	V	For entire VDD range
D042	$\overline{\text{MCLR}}$/GP2/T0CKI		0.85VDD	-	VDD	V	
D042A	OSC1 (XT and LP)		0.7VDD	-	VDD	V	Note1
D043	OSC1 (in EXTRC mode)		0.85VDD	-	VDD	V	
D070	GPIO weak pull-up current	IPUR	50	250	400	μA	VDD = 5V, VPIN = VSS
	Input Leakage Current (2, 3)						For VDD ≤5.5V
D060	I/O ports	IIL	-1	0.5	±1	μA	Vss ≤ VPIN ≤ VDD, Pin at hi-impedance
D061	$\overline{\text{MCLR}}$, GP2/T0CKI		20	130	250	μA	VPIN = VSS + 0.25V(2)
				0.5	+5	μA	VPIN = VDD
D063	OSC1		-3	0.5	+3	μA	Vss ≤ VPIN ≤ VDD, XT and LP options
	Output Low Voltage						
D080	I/O ports/CLKOUT	VOL	-	-	0.6	V	IOL = 8.7 mA, VDD = 4.5V
	Output High Voltage						
D090	I/O ports/CLKOUT (3)	VOH	VDD - 0.7	-	-	V	IOH = -5.4 mA, VDD = 4.5V
	Capacitive Loading Specs on Output Pins						
D100	OSC2 pin	COSC2	-	-	15	pF	In XT and LP modes when external clock is used to drive OSC1.
D101	All I/O pins	CIO	-	-	50	pF	

† Data in "Typ" column is at 5V, 25°C unless otherwise stated. These parameters are for design guidance only and are not tested.

Note 1: In EXTRC oscillator configuration, the OSC1/CLKIN pin is a Schmitt Trigger input. It is not recommended that the PIC12C5XX be driven with external clock in RC mode.

2: The leakage current on the $\overline{\text{MCLR}}$ pin is strongly dependent on the applied voltage level. The specified levels represent normal operating conditions. Higher leakage current may be measured at different input voltages.

3: Negative current is defined as coming out of the pin.

TABLE 11-1: PULL-UP RESISTOR RANGES - PIC12C508/C509

VDD (Volts)	Temperature (°C)	Min	Typ	Max	Units
GP0/GP1					
2.5	–40	38K	42K	63K	Ω
	25	42K	48K	63K	Ω
	85	42K	49K	63K	Ω
	125	50K	55K	63K	Ω
5.5	–40	15K	17K	20K	Ω
	25	18K	20K	23K	Ω
	85	19K	22K	25K	Ω
	125	22K	24K	28K	Ω
GP3					
2.5	–40	285K	346K	417K	Ω
	25	343K	414K	532K	Ω
	85	368K	457K	532K	Ω
	125	431K	504K	593K	Ω
5.5	–40	247K	292K	360K	Ω
	25	288K	341K	437K	Ω
	85	306K	371K	448K	Ω
	125	351K	407K	500K	Ω

* These parameters are characterized but not tested.

© 1999 Microchip Technology Inc.

11.3 Timing Parameter Symbology and Load Conditions - PIC12C508/C509

The timing parameter symbols have been created following one of the following formats:

1. TppS2ppS
2. TppS

T			
F	Frequency	T	Time

Lowercase subscripts (pp) and their meanings:

pp			
2	to	mc	$\overline{\text{MCLR}}$
ck	CLKOUT	osc	oscillator
cy	cycle time	os	OSC1
drt	device reset timer	t0	T0CKI
io	I/O port	wdt	watchdog timer

Uppercase letters and their meanings:

S			
F	Fall	P	Period
H	High	R	Rise
I	Invalid (Hi-impedance)	V	Valid
L	Low	Z	Hi-impedance

FIGURE 11-1: LOAD CONDITIONS - PIC12C508/C509

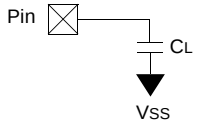

C_L = 50 pF for all pins except OSC2
15 pF for OSC2 in XT or LP modes when external clock is used to drive OSC1

11.4 Timing Diagrams and Specifications

FIGURE 11-2: EXTERNAL CLOCK TIMING - PIC12C508/C509

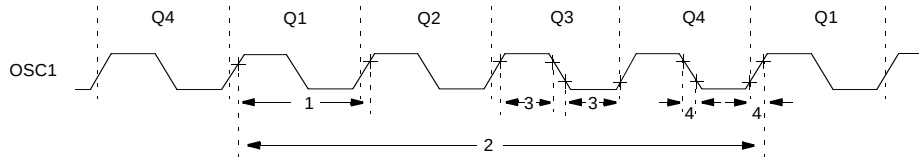

TABLE 11-2: EXTERNAL CLOCK TIMING REQUIREMENTS - PIC12C508/C509

AC Characteristics	Standard Operating Conditions (unless otherwise specified) Operating Temperature 0°C ≤ TA ≤ +70°C (commercial), –40°C ≤ TA ≤ +85°C (industrial), –40°C ≤ TA ≤ +125°C (extended) Operating Voltage VDD range is described in Section 11.1						
Parameter No.	**Sym**	**Characteristic**	**Min**	**Typ(1)**	**Max**	**Units**	**Conditions**
	FOSC	External CLKIN Frequency(2)					
			DC	—	4	MHz	XT osc mode
			DC	—	200	kHz	LP osc mode
		Oscillator Frequency(2)					
			0.1	—	4	MHz	XT osc mode
			DC	—	200	kHz	LP osc mode
1	TOSC	External CLKIN Period(2)	250	—	—	ns	EXTRC osc mode
			250	—	—	ns	XT osc mode
			5	—	—	ms	LP osc mode
		Oscillator Period(2)	250	—	—	ns	EXTRC osc mode
			250	—	10,000	ns	XT osc mode
			5	—	—	ms	LP osc mode
2	Tcy	Instruction Cycle Time(3)	—	4/FOSC	—	—	
3	TosL, TosH	Clock in (OSC1) Low or High Time	50*	—	—	ns	XT oscillator
			2*	—	—	ms	LP oscillator
4	TosR, TosF	Clock in (OSC1) Rise or Fall Time	—	—	25*	ns	XT oscillator
			—	—	50*	ns	LP oscillator

* These parameters are characterized but not tested.

Note 1: Data in the Typical ("Typ") column is at 5V, 25°C unless otherwise stated. These parameters are for design guidance only and are not tested.

2: All specified values are based on characterization data for that particular oscillator type under standard operating conditions with the device executing code. Exceeding these specified limits may result in an unstable oscillator operation and/or higher than expected current consumption.
When an external clock input is used, the "max" cycle time limit is "DC" (no clock) for all devices.

3: Instruction cycle period (TCY) equals four times the input oscillator time base period.

© 1999 Microchip Technology Inc.

TABLE 11-3: CALIBRATED INTERNAL RC FREQUENCIES - PIC12C508/C509

AC Characteristics	Standard Operating Conditions (unless otherwise specified) Operating Temperature 0°C ≤ TA ≤ +70°C (commercial), –40°C ≤ TA ≤ +85°C (industrial), –40°C ≤ TA ≤ +125°C (extended) Operating Voltage VDD range is described in Section 10.1						
Parameter No.	**Sym**	**Characteristic**	**Min***	**Typ(1)**	**Max***	**Units**	**Conditions**
		Internal Calibrated RC Frequency	3.58	4.00	4.32	MHz	VDD = 5.0V
		Internal Calibrated RC Frequency	3.50	—	4.26	MHz	VDD = 2.5V

* These parameters are characterized but not tested.

Note 1: Data in the Typical (“Typ”) column is at 5V, 25°C unless otherwise stated. These parameters are for design guidance only and are not tested.

FIGURE 11-3: I/O TIMING - PIC12C508/C509

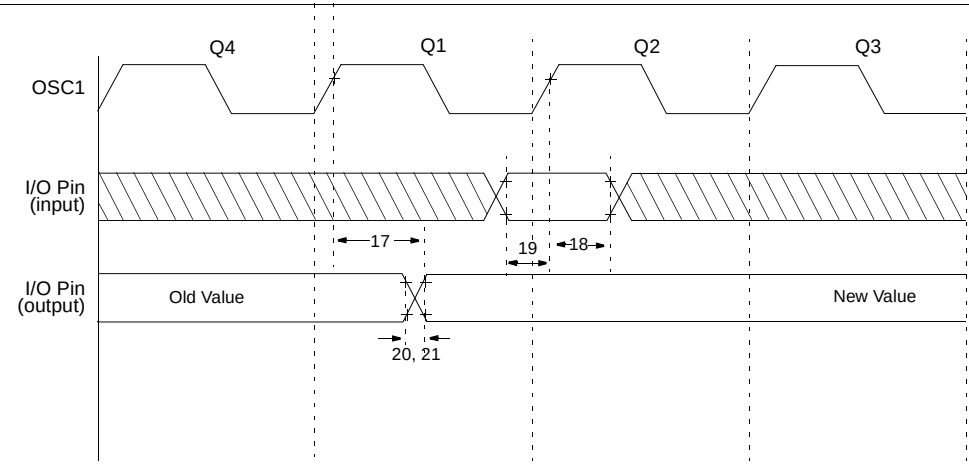

Note: All tests must be done with specified capacitive loads (see data sheet) 50 pF on I/O pins and CLKOUT.

TABLE 11-4: TIMING REQUIREMENTS - PIC12C508/C509

AC Characteristics	Standard Operating Conditions (unless otherwise specified) Operating Temperature 0°C ≤ TA ≤ +70°C (commercial) –40°C ≤ TA ≤ +85°C (industrial) –40°C ≤ TA ≤ +125°C (extended) Operating Voltage VDD range is described in Section 11.1					
Parameter No.	**Sym**	**Characteristic**	**Min**	**Typ(1)**	**Max**	**Units**
17	TosH2ioV	OSC1↑ (Q1 cycle) to Port out valid(3)	—	—	100*	ns
18	TosH2ioI	OSC1↑ (Q2 cycle) to Port input invalid (I/O in hold time)	TBD	—	—	ns
19	TioV2osH	Port input valid to OSC1↑ (I/O in setup time)	TBD	—	—	ns
20	TioR	Port output rise time(2, 3)	—	10	25**	ns
21	TioF	Port output fall time(2, 3)	—	10	25**	ns

* These parameters are characterized but not tested.

** These parameters are design targets and are not tested. No characterization data available at this time.

Note 1: Data in the Typical ("Typ") column is at 5V, 25°C unless otherwise stated. These parameters are for design guidance only and are not tested.

2: Measurements are taken in EXTRC mode.

3: See Figure 11-1 for loading conditions.

FIGURE 11-4: RESET, WATCHDOG TIMER, AND DEVICE RESET TIMER TIMING - PIC12C508/C509

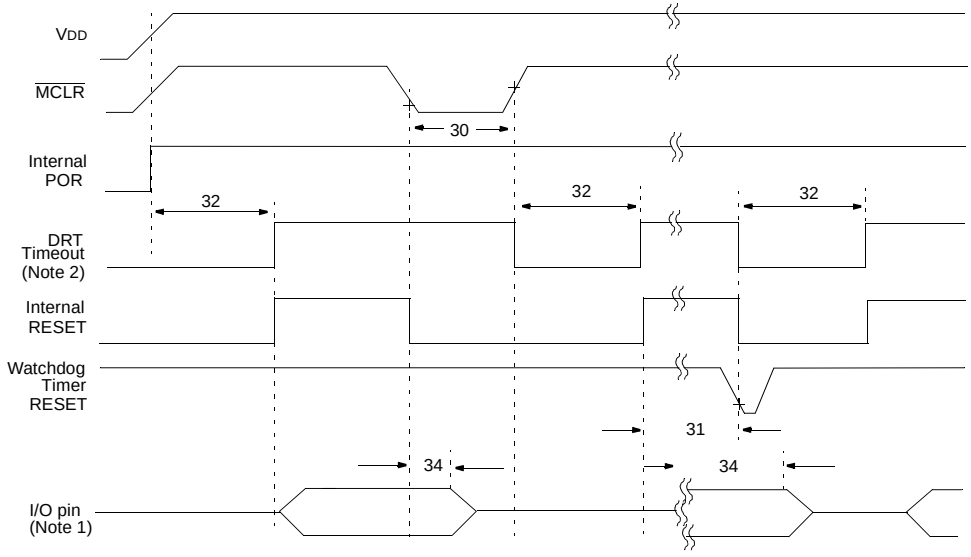

Note 1: I/O pins must be taken out of hi-impedance mode by enabling the output drivers in software.
2: Runs in MCLR or WDT reset only in XT and LP modes.

© 1999 Microchip Technology Inc.

TABLE 11-5: RESET, WATCHDOG TIMER, AND DEVICE RESET TIMER - PIC12C508/C509

AC Characteristics	Standard Operating Conditions (unless otherwise specified) Operating Temperature 0°C ≤ TA ≤ +70°C (commercial) –40°C ≤ TA ≤ +85°C (industrial) –40°C ≤ TA ≤ +125°C (extended) Operating Voltage VDD range is described in Section 11.1						
Parameter No.	**Sym**	**Characteristic**	**Min**	**Typ(1)**	**Max**	**Units**	**Conditions**
30	TmcL	$\overline{\text{MCLR}}$ Pulse Width (low)	2000*	—	—	ns	VDD = 5 V
31	Twdt	Watchdog Timer Time-out Period (No Prescaler)	9*	18*	30*	ms	VDD = 5 V (Commercial)
32	TDRT	Device Reset Timer Period(2)	9*	18*	30*	ms	VDD = 5 V (Commercial)
34	Tioz	I/O Hi-impedance from $\overline{\text{MCLR}}$ Low	—	—	2000*	ns	

* These parameters are characterized but not tested.

Note 1: Data in the Typical (“Typ”) column is at 5V, 25°C unless otherwise stated. These parameters are for design guidance only and are not tested.

Note 2: See Table 11-6.

TABLE 11-6: DRT (DEVICE RESET TIMER PERIOD - PIC12C508/C509)

Oscillator Configuration	POR Reset	Subsequent Resets
IntRC & ExtRC	18 ms (typical)	300 µs (typical)
XT & LP	18 ms (typical)	18 ms (typical)

FIGURE 11-5: TIMER0 CLOCK TIMINGS - PIC12C508/C509

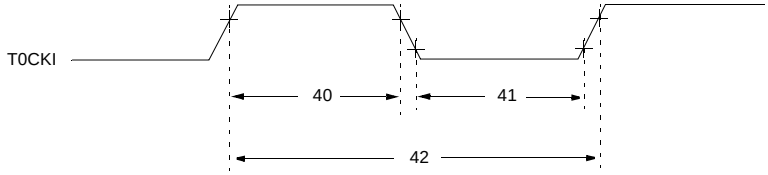

TABLE 11-7: TIMER0 CLOCK REQUIREMENTS - PIC12C508/C509

AC Characteristics								Standard Operating Conditions (unless otherwise specified) Operating Temperature 0°C ≤ TA ≤ +70°C (commercial) –40°C ≤ TA ≤ +85°C (industrial) –40°C ≤ TA ≤ +125°C (extended) Operating Voltage VDD range is described in Section 11.1.
Parameter No.	**Sym**	**Characteristic**		**Min**	**Typ(1)**	**Max**	**Units**	**Conditions**
40	Tt0H	T0CKI High Pulse Width	- No Prescaler	0.5 TCY + 20*	—	—	ns	
			- With Prescaler	10*	—	—	ns	
41	Tt0L	T0CKI Low Pulse Width	- No Prescaler	0.5 TCY + 20*	—	—	ns	
			- With Prescaler	10*	—	—	ns	
42	Tt0P	T0CKI Period		20 or $\frac{T_{CY} + 40}{N}$*	—	—	ns	Whichever is greater. N = Prescale Value (1, 2, 4,..., 256)

* These parameters are characterized but not tested.

Note 1: Data in the Typical ("Typ") column is at 5V, 25°C unless otherwise stated. These parameters are for design guidance only and are not tested.

© 1999 Microchip Technology Inc.

12.0 DC AND AC CHARACTERISTICS - PIC12C508/PIC12C509

The graphs and tables provided in this section are for design guidance and are not tested. In some graphs or tables the data presented are outside specified operating range (e.g., outside specified VDD range). This is for information only and devices will operate properly only within the specified range.

The data presented in this section is a statistical summary of data collected on units from different lots over a period of time. “Typical” represents the mean of the distribution while “max” or “min” represents (mean + 3σ) and (mean – 3σ) respectively, where σ is standard deviation.

FIGURE 12-1: CALIBRATED INTERNAL RC FREQUENCY RANGE VS. TEMPERATURE (VDD = 2.5V)

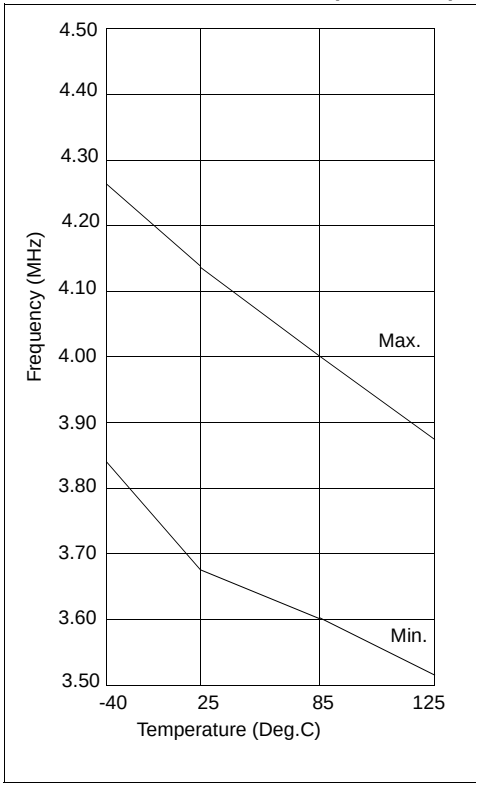

FIGURE 12-2: CALIBRATED INTERNAL RC FREQUENCY RANGE VS. TEMPERATURE (VDD = 5.0V)

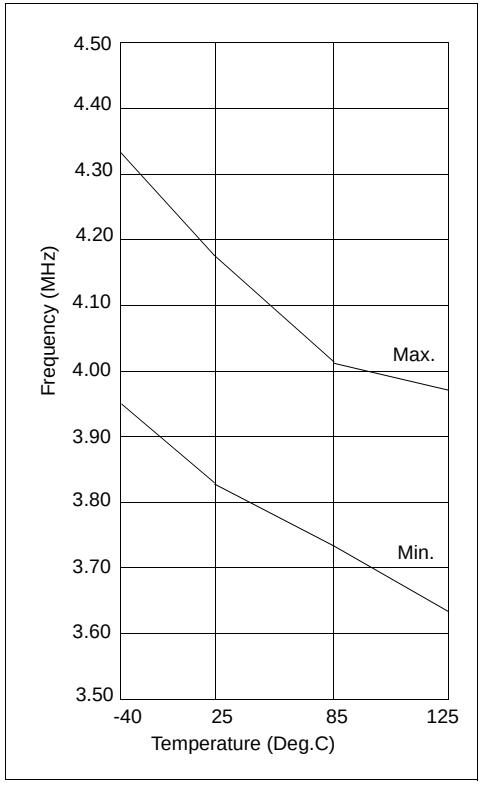

TABLE 12-1: DYNAMIC IDD (TYPICAL) - WDT ENABLED, 25°C

Oscillator	Frequency	VDD = 2.5V	VDD = 5.5V
External RC	4 MHz	250 µA*	780 µA*
Internal RC	4 MHz	420 µA	1.1 mA
XT	4 MHz	251 µA	780 µA
LP	32 KHz	15 µA	37 µA

*Does not include current through external R&C.

FIGURE 12-3: WDT TIMER TIME-OUT PERIOD VS. VDD

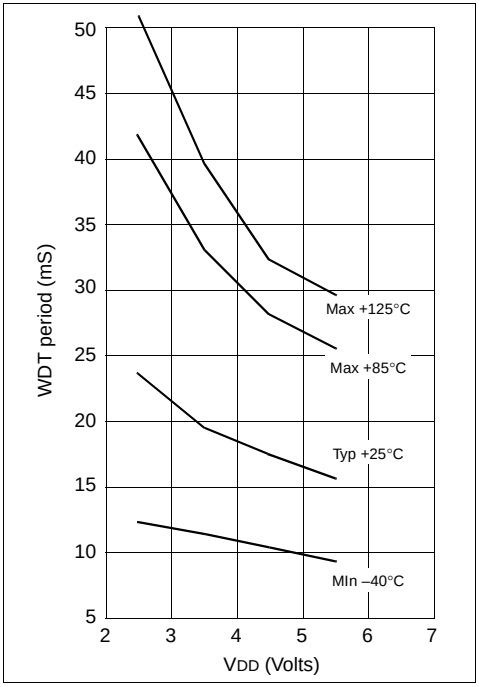

FIGURE 12-4: SHORT DRT PERIOD VS. VDD

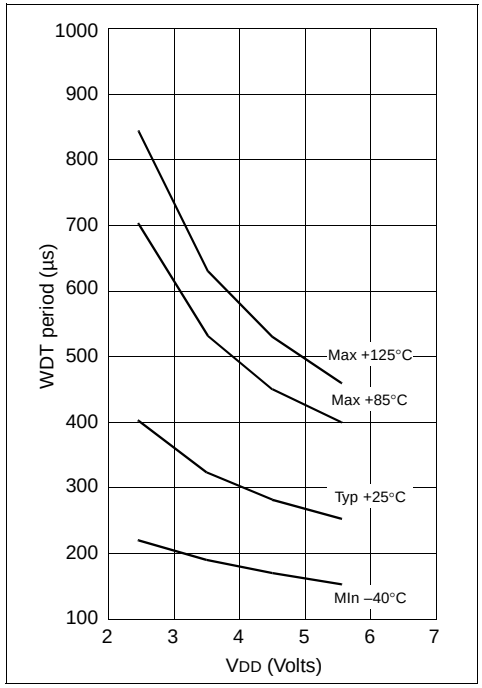

© 1999 Microchip Technology Inc.

FIGURE 12-5: IOH vs. VOH, VDD = 2.5 V

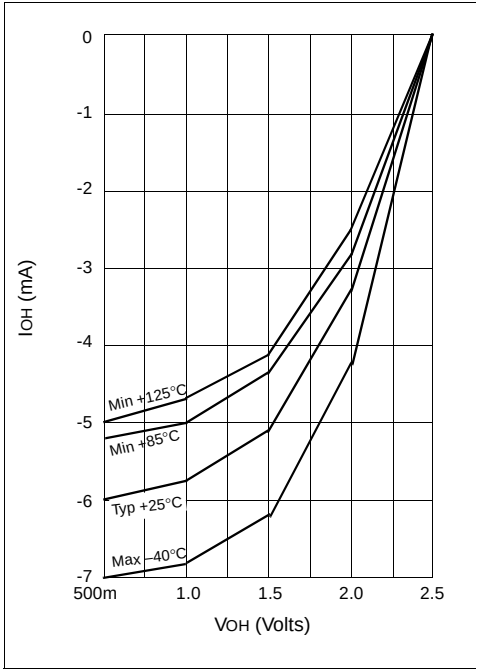

FIGURE 12-6: IOH vs. VOH, VDD = 5.5 V

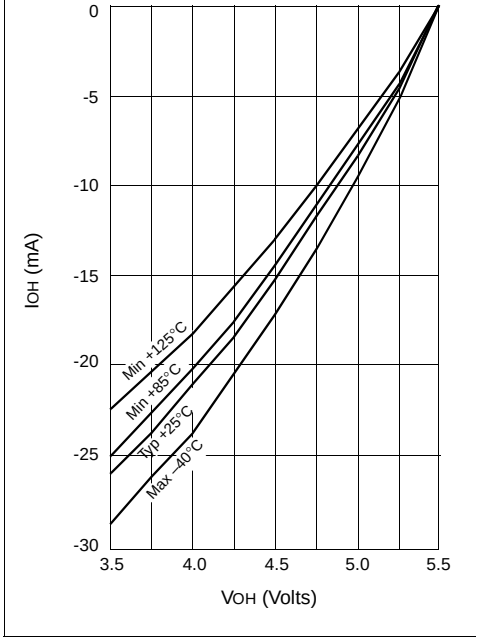

FIGURE 12-7: IOL vs. VOL, VDD = 2.5 V

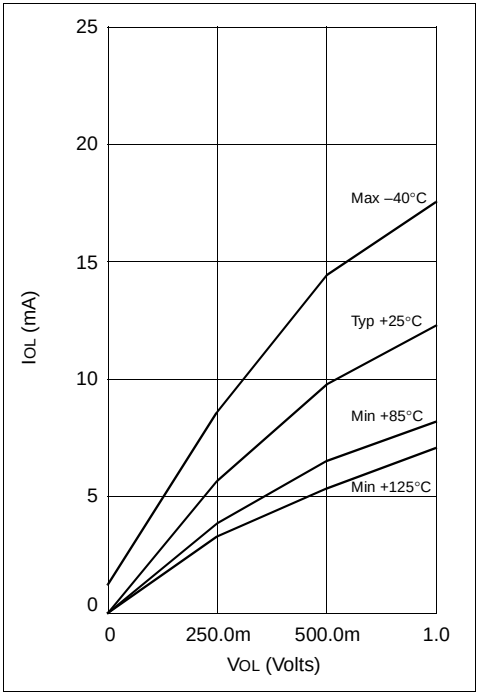

FIGURE 12-8: IOL vs. VOL, VDD = 5.5 V

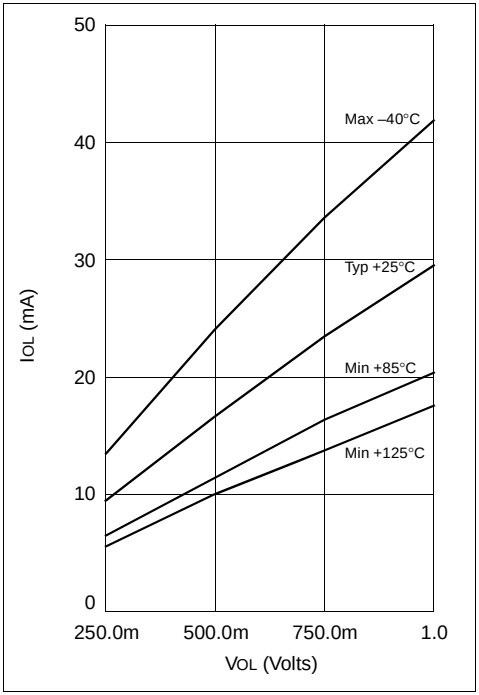

© 1999 Microchip Technology Inc.

NOTES:

© 1999 Microchip Technology Inc.

13.0 ELECTRICAL CHARACTERISTICS - PIC12C508A/PIC12C509A/ PIC12LC508A/PIC12LC509A/PIC12CR509A/PIC12CE518/PIC12CE519/ PIC12LCE518/PIC12LCE519/PIC12LCR509A

Absolute Maximum Ratings†

Ambient Temperature under bias ..... –40°C to +125°C

Storage Temperature ..... –65°C to +150°C

Voltage on V_{DD} with respect to V_{SS} ..... 0 to +7.0 V

Voltage on $\overline{MCLR}$ with respect to V_{SS} ..... 0 to +14 V

Voltage on all other pins with respect to V_{SS} ..... –0.3 V to (V_{DD} + 0.3 V)

Total Power Dissipation(1) ..... 700 mW

Max. Current out of V_{SS} pin ..... 200 mA

Max. Current into V_{DD} pin ..... 150 mA

Input Clamp Current, I_{IK} (V_I < 0 or V_I > V_{DD}) ..... ±20 mA

Output Clamp Current, I_{OK} (V_O < 0 or V_O > V_{DD}) ..... ±20 mA

Max. Output Current sunk by any I/O pin ..... 25 mA

Max. Output Current sourced by any I/O pin ..... 25 mA

Max. Output Current sourced by I/O port (GPIO) ..... 100 mA

Max. Output Current sunk by I/O port (GPIO) ..... 100 mA

Note 1: Power Dissipation is calculated as follows: $P_{DIS} = V_{DD} \times \{I_{DD} - \sum I_{OH}\} + \sum \{(V_{DD}-V_{OH}) \times I_{OH}\} + \sum(V_{OL} \times I_{OL})$

†NOTICE: Stresses above those listed under "Maximum Ratings" may cause permanent damage to the device. This is a stress rating only and functional operation of the device at those or any other conditions above those indicated in the operation listings of this specification is not implied. Exposure to maximum rating conditions for extended periods may affect device reliability.

13.1 DC CHARACTERISTICS: PIC12C508A/509A (Commercial, Industrial, Extended) PIC12CE518/519 (Commercial, Industrial, Extended) PIC12CR509A (Commercial, Industrial, Extended)

DC Characteristics Power Supply Pins			Standard Operating Conditions (unless otherwise specified) Operating Temperature 0°C ≤ TA ≤ +70°C (commercial) –40°C ≤ TA ≤ +85°C (industrial) –40°C ≤ TA ≤ +125°C (extended)				
Parm No.	**Characteristic**	**Sym**	**Min**	**Typ(1)**	**Max**	**Units**	**Conditions**
D001	**Supply Voltage**	VDD	3.0		5.5	V	FOSC = DC to 4 MHz (Commercial/ Industrial, Extended)
D002	**RAM Data Retention Voltage(2)**	VDR		1.5*		V	Device in SLEEP mode
D003	**VDD Start Voltage to ensure Power-on Reset**	VPOR		VSS		V	See section on Power-on Reset for details
D004	**VDD Rise Rate to ensure Power-on Reset**	SVDD	0.05*			V/ms	See section on Power-on Reset for details
D010	**Supply Current(3)**	IDD	—	0.8	1.4	mA	XT and EXTRC options (Note 4) FOSC = 4 MHz, VDD = 5.5V
D010C			—	0.8	1.4	mA	INTRC Option FOSC = 4 MHz, VDD = 5.5V
D010A			—	19	27	µA	LP OPTION, Commercial Temperature FOSC = 32 kHz, VDD = 3.0V, WDT disabled
			—	19	35	µA	LP OPTION, Industrial Temperature FOSC = 32 kHz, VDD = 3.0V, WDT disabled
			—	30	55	µA	LP OPTION, Extended Temperature FOSC = 32 kHz, VDD = 3.0V, WDT disabled
D020	**Power-Down Current (5)**	IPD	—	0.25	4	µA	VDD = 3.0V, Commercial WDT disabled
D021			—	0.25	5	µA	VDD = 3.0V, Industrial WDT disabled
D021B			—	2	12	µA	VDD = 3.0V, Extended WDT disabled
D022	**Power-Down Current**	ΔIWDT	—	2.2	5	µA	VDD = 3.0V, Commercial
			—	2.2	6	µA	VDD = 3.0V, Industrial
			—	4	11	µA	VDD = 3.0V, Extended
	Supply Current (3) During read/write to EEPROM peripheral	ΔIEE	—	0.1	0.2	mA	FOSC = 4 MHz, Vdd = 5.5V, SCL = 400kHz

* These parameters are characterized but not tested.

Note 1: Data in the Typical ("Typ") column is based on characterization results at 25°C. This data is for design guidance only and is not tested.

2: This is the limit to which VDD can be lowered in SLEEP mode without losing RAM data.

3: The supply current is mainly a function of the operating voltage and frequency. Other factors such as bus loading, oscillator type, bus rate, internal code execution pattern, and temperature also have an impact on the current consumption.

a) The test conditions for all IDD measurements in active operation mode are: OSC1 = external square wave, from rail-to-rail; all I/O pins tristated, pulled to VSS, T0CKI = VDD, $\overline{MCLR}$ = VDD; WDT enabled/disabled as specified.

b) For standby current measurements, the conditions are the same, except that the device is in SLEEP mode.

4: Does not include current through Rext. The current through the resistor can be estimated by the formula: IR = VDD/2Rext (mA) with Rext in kOhm.

5: The power down current in SLEEP mode does not depend on the oscillator type. Power down current is measured with the part in SLEEP mode, with all I/O pins in hi-impedance state and tied to VDD or VSS.

© 1999 Microchip Technology Inc.

13.2 DC CHARACTERISTICS: PIC12LC508A/509A (Commercial, Industrial) PIC12LCE518/519 (Commercial, Industrial) PIC12LCR509A (Commercial, Industrial)

DC Characteristics Power Supply Pins							Standard Operating Conditions (unless otherwise specified) Operating Temperature 0°C ≤ TA ≤ +70°C (commercial) –40°C ≤ TA ≤ +85°C (industrial)
Parm No.	**Characteristic**	**Sym**	**Min**	**Typ(1)**	**Max**	**Units**	**Conditions**
D001	**Supply Voltage**	VDD	2.5		5.5	V	FOSC = DC to 4 MHz (Commercial/ Industrial)
D002	**RAM Data Retention Voltage(2)**	VDR		1.5*		V	Device in SLEEP mode
D003	**VDD Start Voltage to ensure Power-on Reset**	VPOR		VSS		V	See section on Power-on Reset for details
D004	**VDD Rise Rate to ensure Power-on Reset**	SVDD	0.05*			V/ms	See section on Power-on Reset for details
D010	**Supply Current(3)**	IDD	—	0.4	0.8	mA	XT and EXTRC options (Note 4) FOSC = 4 MHz, VDD = 2.5V
D010C			—	0.4	0.8	mA	INTRC Option FOSC = 4 MHz, VDD = 2.5V
D010A			—	15	23	µA	LP OPTION, Commercial Temperature FOSC = 32 kHz, VDD = 2.5V, WDT disabled
			—	15	31	µA	LP OPTION, Industrial Temperature FOSC = 32 kHz, VDD = 2.5V, WDT disabled
D020	**Power-Down Current (5)**	IPD					
D021			—	0.2	3	µA	VDD = 2.5V, Commercial
D021B			—	0.2	4	µA	VDD = 2.5V, Industrial
		ΔIWDT	—	2.0	4	mA	VDD = 2.5V, Commercial
				2.0	5	mA	VDD = 2.5V, Industrial

* These parameters are characterized but not tested.

Note 1: Data in the Typical ("Typ") column is based on characterization results at 25°C. This data is for design guidance only and is not tested.

2: This is the limit to which VDD can be lowered in SLEEP mode without losing RAM data.

3: The supply current is mainly a function of the operating voltage and frequency. Other factors such as bus loading, oscillator type, bus rate, internal code execution pattern, and temperature also have an impact on the current consumption.

a) The test conditions for all IDD measurements in active operation mode are: OSC1 = external square wave, from rail-to-rail; all I/O pins tristated, pulled to VSS, T0CKI = VDD, $\overline{\text{MCLR}}$ = VDD; WDT enabled/disabled as specified.

b) For standby current measurements, the conditions are the same, except that the device is in SLEEP mode.

4: Does not include current through Rext. The current through the resistor can be estimated by the formula: IR = VDD/2Rext (mA) with Rext in kOhm.

5: The power down current in SLEEP mode does not depend on the oscillator type. Power down current is measured with the part in SLEEP mode, with all I/O pins in hi-impedance state and tied to VDD or VSS.

13.3 DC CHARACTERISTICS: PIC12C508A/509A (Commercial, Industrial, Extended) PIC12C518/519 (Commercial, Industrial, Extended) PIC12CR509A (Commercial, Industrial, Extended)

DC CHARACTERISTICS							**Standard Operating Conditions (unless otherwise specified)** Operating temperature 0°C ≤ TA ≤ +70°C (commercial) –40°C ≤ TA ≤ +85°C (industrial) –40°C ≤ TA ≤ +125°C (extended) Operating voltage VDD range as described in DC spec Section 13.1 and Section 13.2.
Param No.	**Characteristic**	**Sym**	**Min**	**Typ†**	**Max**	**Units**	**Conditions**
	Input Low Voltage						
	I/O ports	VIL					
D030	with TTL buffer		VSS	-	0.8V	V	For 4.5V ≤ VDD ≤ 5.5V
			VSS	-	0.15VDD	V	otherwise
D031	with Schmitt Trigger buffer		VSS	-	0.2VDD	V	
D032	$\overline{\text{MCLR}}$, GP2/T0CKI (in EXTRC mode)		VSS	-	0.2VDD	V	
D033	OSC1 (in EXTRC mode)		VSS	-	0.2VDD		Note 1
D033	OSC1 (in XT and LP)		VSS	-	0.3VDD	V	Note 1
	Input High Voltage						
	I/O ports	VIH		-			
D040	with TTL buffer		0.25VDD + 0.8V	-	VDD	V	4.5V ≤ VDD ≤ 5.5V
D040A			2.0V	-	VDD	V	otherwise
D041	with Schmitt Trigger buffer		0.8VDD	-	VDD	V	For entire VDD range
D042	$\overline{\text{MCLR}}$, GP2/T0CKI		0.8VDD	-	VDD	V	
D042A	OSC1 (XT and LP)		0.7VDD	-	VDD	V	Note 1
D043	OSC1 (in EXTRC mode)		0.9VDD	-	VDD	V	
D070	GPIO weak pull-up current (Note 4)	IPUR	30	250	400	μA	VDD = 5V, VPIN = VSS
	$\overline{\text{MCLR}}$ pull-up current	-	-	-	30	μA	VDD = 5V, VPIN = VSS
	Input Leakage Current (Notes 2, 3)						
D060	I/O ports	IIL	-	-	±1	μA	Vss ≤ VPIN ≤ VDD, Pin at hi-impedance
D061	T0CKI		-	-	±5	μA	Vss ≤ VPIN ≤ VDD
D063	OSC1		-	-	±5	μA	Vss ≤ VPIN ≤ VDD, XT and LP osc configuration
	Output Low Voltage						
D080	I/O ports	VOL	-	-	0.6	V	IOL = 8.5 mA, VDD = 4.5V, –40°C to +85°C
D080A			-	-	0.6	V	IOL = 7.0 mA, VDD = 4.5V, –40°C to +125°C
	Output High Voltage						
D090	I/O ports (Note 3)	VOH	VDD - 0.7	-	-	V	IOH = -3.0 mA, VDD = 4.5V, –40°C to +85°C
D090A			VDD - 0.7	-	-	V	IOH = -2.5 mA, VDD = 4.5V, –40°C to +125°C
	Capacitive Loading Specs on Output Pins						
D100	OSC2 pin	COSC2	-	-	15	pF	In XT and LP modes when external clock is used to drive OSC1.
D101	All I/O pins	CIO	-	-	50	pF	

† Data in "Typ" column is at 5V, 25°C unless otherwise stated. These parameters are for design guidance only and are not tested.

Note 1: In EXTRC oscillator configuration, the OSC1/CLKIN pin is a Schmitt Trigger input. It is not recommended that the PIC12C5XX be driven with external clock in RC mode.

2: The leakage current on the $\overline{\text{MCLR}}$ pin is strongly dependent on the applied voltage level. The specified levels represent normal operating conditions. Higher leakage current may be measured at different input voltages.

3: Negative current is defined as coming out of the pin.

4: This spec. applies when GP3/$\overline{\text{MCLR}}$ is configured as $\overline{\text{MCLR}}$. The leakage current of the $\overline{\text{MCLR}}$ circuit is higher than the standard I/O logic.

© 1999 Microchip Technology Inc.

13.4 DC CHARACTERISTICS: PIC12LC508A/509A (Commercial, Industrial) PIC12LC518/519 (Commercial, Industrial) PIC12LCR509A (Commercial, Industrial)

DC CHARACTERISTICS			Standard Operating Conditions (unless otherwise specified) Operating temperature 0°C ≤ TA ≤ +70°C (commercial) –40°C ≤ TA ≤ +85°C (industrial) Operating voltage VDD range as described in DC spec Section 13.1 and Section 13.2.				
Param No.	**Characteristic**	**Sym**	**Min**	**Typ†**	**Max**	**Units**	**Conditions**
	Input Low Voltage						
	I/O ports	VIL					
D030	with TTL buffer		VSS	-	0.8V	V	For 4.5V ≤ VDD ≤ 5.5V
			VSS	-	0.15VDD	V	otherwise
D031	with Schmitt Trigger buffer		VSS	-	0.2VDD	V	
D032	$\overline{\text{MCLR}}$, GP2/T0CKI (in EXTRC mode)		VSS	-	0.2VDD	V	
D033	OSC1 (in EXTRC mode)		VSS	-	0.2VDD	V	Note 1
D033	OSC1 (in XT and LP)		VSS	-	0.3VDD	V	Note 1
	Input High Voltage						
	I/O ports	VIH		-			
D040	with TTL buffer		0.25VDD + 0.8V	-	VDD	V	4.5V ≤ VDD ≤ 5.5V
D040A			2.0V	-	VDD	V	otherwise
D041	with Schmitt Trigger buffer		0.8VDD	-	VDD	V	For entire VDD range
D042	$\overline{\text{MCLR}}$, GP2/T0CKI		0.8VDD	-	VDD	V	
D042A	OSC1 (XT and LP)		0.7VDD	-	VDD	V	Note 1
D043	OSC1 (in EXTRC mode)		0.9VDD	-	VDD	V	
D070	GPIO weak pull-up current (Note 4)	IPUR	30	250	400	μA	VDD = 5V, VPIN = VSS
	$\overline{\text{MCLR}}$ pull-up current	-	-	-	30	μA	VDD = 5V, VPIN = VSS
	Input Leakage Current (Notes 2, 3)						
D060	I/O ports	IIL	-	-	±1	μA	Vss ≤ VPIN ≤ VDD, Pin at hi-impedance
D061	T0CKI		-	-	±5	μA	Vss ≤ VPIN ≤ VDD
D063	OSC1		-	-	±5	μA	Vss ≤ VPIN ≤ VDD, XT and LP osc configuration
	Output Low Voltage						
D080	I/O ports	VOL	-	-	0.6	V	IOL = 8.5 mA, VDD = 4.5V, –40°C to +85°C
D080A			-	-	0.6	V	IOL = 7.0 mA, VDD = 4.5V, –40°C to +125°C
	Output High Voltage						
D090	I/O ports (Note 3)	VOH	VDD - 0.7	-	-	V	IOH = -3.0 mA, VDD = 4.5V, –40°C to +85°C
D090A			VDD - 0.7	-	-	V	IOH = -2.5 mA, VDD = 4.5V, –40°C to +125°C
	Capacitive Loading Specs on Output Pins						
D100	OSC2 pin	COSC2	-	-	15	pF	In XT and LP modes when external clock is used to drive OSC1.
D101	All I/O pins	CIO	-	-	50	pF	

† Data in "Typ" column is at 5V, 25°C unless otherwise stated. These parameters are for design guidance only and are not tested.

Note 1: In EXTRC oscillator configuration, the OSC1/CLKIN pin is a Schmitt Trigger input. It is not recommended that the PIC12C5XX be driven with external clock in RC mode.

2: The leakage current on the $\overline{\text{MCLR}}$ pin is strongly dependent on the applied voltage level. The specified levels represent normal operating conditions. Higher leakage current may be measured at different input voltages.

3: Negative current is defined as coming out of the pin.

4: This spec. applies when GP3/$\overline{\text{MCLR}}$ is configured as $\overline{\text{MCLR}}$. The leakage current of the $\overline{\text{MCLR}}$ circuit is higher than the standard I/O logic.

TABLE 13-1: PULL-UP RESISTOR RANGES* - PIC12C508A, PIC12C509A, PIC12CR509A, PIC12CE518, PIC12CE519, PIC12LC508A, PIC12LC509A, PIC12LCR509A, PIC12LCE518 and PIC12LCE519

VDD (Volts)	Temperature (°C)	Min	Typ	Max	Units
GP0/GP1					
2.5	–40	38K	42K	63K	Ω
	25	42K	48K	63K	Ω
	85	42K	49K	63K	Ω
	125	50K	55K	63K	Ω
5.5	–40	15K	17K	20K	Ω
	25	18K	20K	23K	Ω
	85	19K	22K	25K	Ω
	125	22K	24K	28K	Ω
GP3					
2.5	–40	285K	346K	417K	Ω
	25	343K	414K	532K	Ω
	85	368K	457K	532K	Ω
	125	431K	504K	593K	Ω
5.5	–40	247K	292K	360K	Ω
	25	288K	341K	437K	Ω
	85	306K	371K	448K	Ω
	125	351K	407K	500K	Ω

* These parameters are characterized but not tested.

© 1999 Microchip Technology Inc.

13.5 Timing Parameter Symbology and Load Conditions - PIC12C508A, PIC12C509A, PIC12CR509A, PIC12CE518, PIC12CE519, PIC12LC508A, PIC12LC509A, PIC12LCR509A, PIC12LCE518 and PIC12LCE519

The timing parameter symbols have been created following one of the following formats:

1. TppS2ppS
2. TppS

T			
F	Frequency	T	Time

Lowercase subscripts (pp) and their meanings:

pp			
2	to	mc	$\overline{\text{MCLR}}$
ck	CLKOUT	osc	oscillator
cy	cycle time	os	OSC1
drt	device reset timer	t0	T0CKI
io	I/O port	wdt	watchdog timer

Uppercase letters and their meanings:

S			
F	Fall	P	Period
H	High	R	Rise
I	Invalid (Hi-impedance)	V	Valid
L	Low	Z	Hi-impedance

FIGURE 13-1: LOAD CONDITIONS - PIC12C508A/C509A, PIC12CE518/519, PIC12LC508A/509A, PIC12LCE518/519, PIC12LCR509A

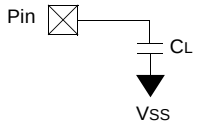

C_L = 50 pF for all pins except OSC2
15 pF for OSC2 in XT, HS or LP modes when external clock is used to drive OSC1

13.6 Timing Diagrams and Specifications

FIGURE 13-2: EXTERNAL CLOCK TIMING - PIC12C508A, PIC12C509A, PIC12CR509A, PIC12CE518, PIC12CE519, PIC12LC508A, PIC12LC509A, PIC12LCR509A, PIC12LCE518 and PIC12LCE519

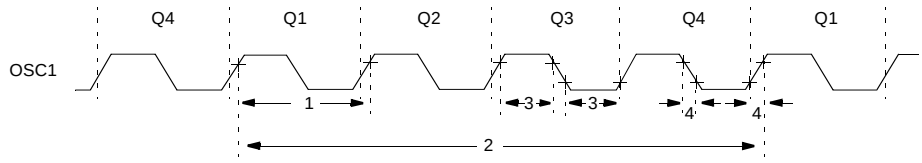

TABLE 13-2: EXTERNAL CLOCK TIMING REQUIREMENTS - PIC12C508A, PIC12C509A, PIC12CE518, PIC12CE519, PIC12LC508A, PIC12LC509A, PIC12LCR509A, PIC12LCE518 and PIC12LCE519

AC Characteristics		Standard Operating Conditions (unless otherwise specified) Operating Temperature 0°C ≤ TA ≤ +70°C (commercial), –40°C ≤ TA ≤ +85°C (industrial), –40°C ≤ TA ≤ +125°C (extended) Operating Voltage VDD range is described in Section 13.1					
Parameter No.	**Sym**	**Characteristic**	**Min**	**Typ(1)**	**Max**	**Units**	**Conditions**
	FOSC	External CLKIN Frequency(2)					
			DC	—	4	MHz	XT osc mode
			DC	—	200	kHz	LP osc mode
		Oscillator Frequency(2)	DC	—	4	MHz	EXTRC osc mode
			0.1	—	4	MHz	XT osc mode
			DC	—	200	kHz	LP osc mode
1	TOSC	External CLKIN Period(2)					
			250	—	—	ns	XT osc mode
			5	—	—	ms	LP osc mode
		Oscillator Period(2)	250	—	—	ns	EXTRC osc mode
			250	—	10,000	ns	XT osc mode
			5	—	—	ms	LP osc mode
2	Tcy	Instruction Cycle Time(3)	—	4/FOSC	—	—	
3	TosL, TosH	Clock in (OSC1) Low or High Time	50*	—	—	ns	XT oscillator
			2*	—	—	ms	LP oscillator
4	TosR, TosF	Clock in (OSC1) Rise or Fall Time	—	—	25*	ns	XT oscillator
			—	—	50*	ns	LP oscillator

* These parameters are characterized but not tested.

Note 1: Data in the Typical ("Typ") column is at 5V, 25°C unless otherwise stated. These parameters are for design guidance only and are not tested.

2: All specified values are based on characterization data for that particular oscillator type under standard operating conditions with the device executing code. Exceeding these specified limits may result in an unstable oscillator operation and/or higher than expected current consumption.
When an external clock input is used, the "max" cycle time limit is "DC" (no clock) for all devices.

3: Instruction cycle period (TCY) equals four times the input oscillator time base period.

© 1999 Microchip Technology Inc.

TABLE 13-3: CALIBRATED INTERNAL RC FREQUENCIES - PIC12C508A, PIC12C509A, PIC12CE518, PIC12CE519, PIC12LC508A, PIC12LC509A, PIC12LCR509A, PIC12LCE518 and PIC12LCE519

AC Characteristics		Standard Operating Conditions (unless otherwise specified) Operating Temperature 0°C ≤ TA ≤ +70°C (commercial), –40°C ≤ TA ≤ +85°C (industrial), –40°C ≤ TA ≤ +125°C (extended) Operating Voltage VDD range is described in Section 10.1					
Parameter No.	**Sym**	**Characteristic**	**Min***	**Typ(1)**	**Max***	**Units**	**Conditions**
		Internal Calibrated RC Frequency	3.65	4.00	4.28	MHz	VDD = 5.0V
		Internal Calibrated RC Frequency	3.55	—	4.31	MHz	VDD = 2.5V

* These parameters are characterized but not tested.

Note 1: Data in the Typical (“Typ”) column is at 5V, 25°C unless otherwise stated. These parameters are for design guidance only and are not tested.

FIGURE 13-3: I/O TIMING - PIC12C508A, PIC12C509A, PIC12CE518, PIC12CE519, PIC12LC508A, PIC12LC509A, PIC12LCR509A, PIC12LCE518 and PIC12LCE519

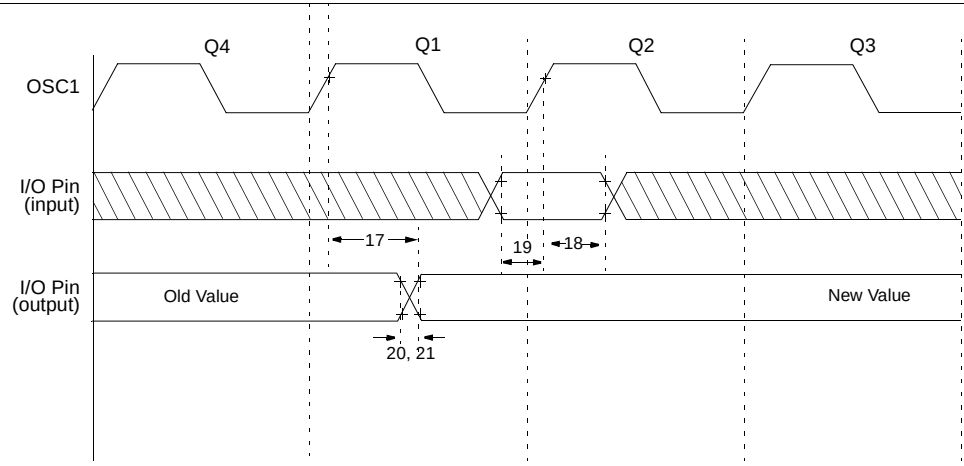

Note: All tests must be done with specified capacitive loads (see data sheet) 50 pF on I/O pins and CLKOUT.

TABLE 13-4: TIMING REQUIREMENTS - PIC12C508A, PIC12C509A, PIC12CE518, PIC12CE519, PIC12LC508A, PIC12LC509A, PIC12LCR509A, PIC12LCE518 and PIC12LCE519

AC Characteristics		Standard Operating Conditions (unless otherwise specified) Operating Temperature 0°C ≤ TA ≤ +70°C (commercial) –40°C ≤ TA ≤ +85°C (industrial) –40°C ≤ TA ≤ +125°C (extended) Operating Voltage VDD range is described in Section 13.1				
Parameter No.	**Sym**	**Characteristic**	**Min**	**Typ(1)**	**Max**	**Units**
17	TosH2ioV	OSC1↑ (Q1 cycle) to Port out valid(3)	—	—	100*	ns
18	TosH2ioI	OSC1↑ (Q2 cycle) to Port input invalid (I/O in hold time)	TBD	—	—	ns
19	TioV2osH	Port input valid to OSC1↑ (I/O in setup time)	TBD	—	—	ns
20	TioR	Port output rise time(2, 3)	—	10	25**	ns
21	TioF	Port output fall time(2, 3)	—	10	25**	ns

* These parameters are characterized but not tested.

** These parameters are design targets and are not tested. No characterization data available at this time.

Note 1: Data in the Typical (“Typ”) column is at 5V, 25°C unless otherwise stated. These parameters are for design guidance only and are not tested.

2: Measurements are taken in EXTRC mode.

3: See Figure 13-1 for loading conditions.

© 1999 Microchip Technology Inc.

FIGURE 13-4: RESET, WATCHDOG TIMER, AND DEVICE RESET TIMER TIMING - PIC12C508A, PIC12C509A, PIC12CE518, PIC12CE519, PIC12LC508A, PIC12LC509A, PIC12LCR509A, PIC12LCE518 and PIC12LCE519

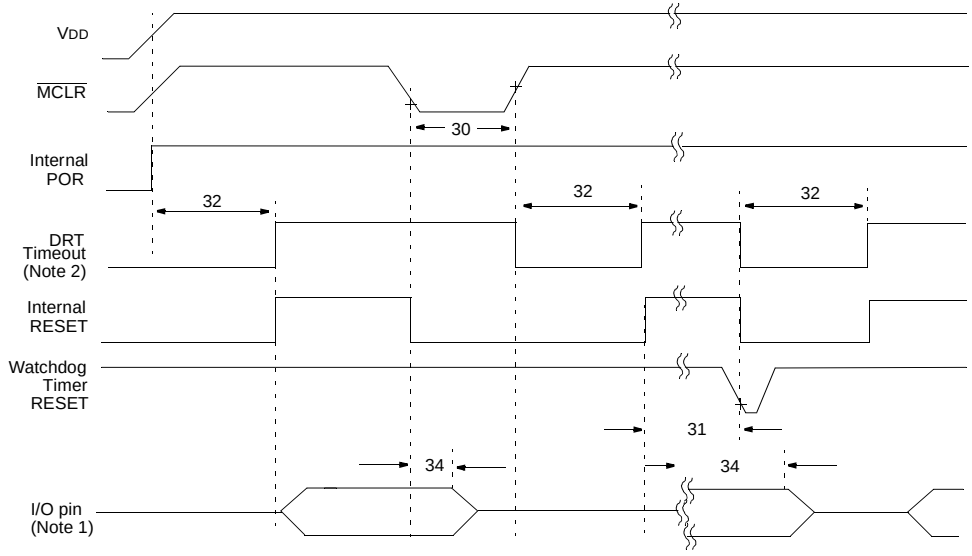

Note 1: I/O pins must be taken out of hi-impedance mode by enabling the output drivers in software.
2: Runs in MCLR or WDT reset only in XT and LP modes.

TABLE 13-5: RESET, WATCHDOG TIMER, AND DEVICE RESET TIMER - PIC12C508A, PIC12C509A, PIC12CE518, PIC12CE519, PIC12LC508A, PIC12LC509A, PIC12LCR509A, PIC12LCE518 and PIC12LCE519

AC Characteristics	Standard Operating Conditions (unless otherwise specified) Operating Temperature 0°C ≤ TA ≤ +70°C (commercial) –40°C ≤ TA ≤ +85°C (industrial) –40°C ≤ TA ≤ +125°C (extended) Operating Voltage VDD range is described in Section 13.1						
Parameter No.	**Sym**	**Characteristic**	**Min**	**Typ(1)**	**Max**	**Units**	**Conditions**
30	TmcL	$\overline{\text{MCLR}}$ Pulse Width (low)	2000*	—	—	ns	VDD = 5 V
31	Twdt	Watchdog Timer Time-out Period (No Prescaler)	9*	18*	30*	ms	VDD = 5 V (Commercial)
32	TDRT	Device Reset Timer Period(2)	9*	18*	30*	ms	VDD = 5 V (Commercial)
34	Tioz	I/O Hi-impedance from $\overline{\text{MCLR}}$ Low	—	—	2000*	ns	

* These parameters are characterized but not tested.

Note 1: Data in the Typical (“Typ”) column is at 5V, 25°C unless otherwise stated. These parameters are for design guidance only and are not tested.

Note 2: See Table 13-6.

TABLE 13-6: DRT (DEVICE RESET TIMER PERIOD) - PIC12C508A, PIC12C509A, PIC12CE518, PIC12CE519, PIC12LC508A, PIC12LC509A, PIC12LCR509A, PIC12LCE518 and PIC12LCE519

Oscillator Configuration	POR Reset	Subsequent Resets
IntRC & ExtRC	18 ms (typical)(1)	300 µs (typical)(1)
XT & LP	18 ms (typical)(1)	18 ms (typical)(1)

Note 1: Data in the Typical ("Typ") column is at 5V, 25°C unless otherwise stated. These parameters are for design guidance only and are not tested.

FIGURE 13-5: TIMER0 CLOCK TIMINGS - PIC12C508A, PIC12C509A, PIC12CE518, PIC12CE519, PIC12LC508A, PIC12LC509A, PIC12LCR509A, PIC12LCE518 and PIC12LCE519

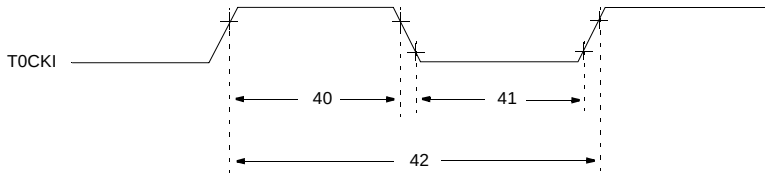

TABLE 13-7: TIMER0 CLOCK REQUIREMENTS - PIC12C508A, PIC12C509A, PIC12CE518, PIC12CE519, PIC12LC508A, PIC12LC509A, PIC12LCR509A, PIC12LCE518 and PIC12LCE519

AC Characteristics	Standard Operating Conditions (unless otherwise specified) Operating Temperature 0°C ≤ TA ≤ +70°C (commercial) –40°C ≤ TA ≤ +85°C (industrial) –40°C ≤ TA ≤ +125°C (extended) Operating Voltage VDD range is described in Section 13.1.

Parameter No.	Sym	Characteristic	Min	Typ(1)	Max	Units	Conditions
40	Tt0H	T0CKI High Pulse Width - No Prescaler	0.5 TCY + 20*	—	—	ns	
		- With Prescaler	10*	—	—	ns	
41	Tt0L	T0CKI Low Pulse Width - No Prescaler	0.5 TCY + 20*	—	—	ns	
		- With Prescaler	10*	—	—	ns	
42	Tt0P	T0CKI Period	20 or $\frac{T_{CY} + 40}{N}$*	—	—	ns	Whichever is greater. N = Prescale Value (1, 2, 4,..., 256)

* These parameters are characterized but not tested.

Note 1: Data in the Typical ("Typ") column is at 5V, 25°C unless otherwise stated. These parameters are for design guidance only and are not tested.

© 1999 Microchip Technology Inc.

TABLE 13-8: EEPROM MEMORY BUS TIMING REQUIREMENTS - PIC12CE5XX ONLY.

AC Characteristics	Standard Operating Conditions (unless otherwise specified) Operating Temperature 0°C ≤ TA ≤ +70°C, Vcc = 3.0V to 5.5V (commercial) –40°C ≤ TA ≤ +85°C, Vcc = 3.0V to 5.5V (industrial) –40°C ≤ TA ≤ +125°C, Vcc = 4.5V to 5.5V (extended) Operating Voltage VDD range is described in Section 13.1				
Parameter	**Symbol**	**Min**	**Max**	**Units**	**Conditions**
Clock frequency	FCLK	— — —	100 100 400	kHz	4.5V ≤ Vcc ≤ 5.5V (E Temp range) 3.0V ≤ Vcc ≤ 4.5V 4.5V ≤ Vcc ≤ 5.5V
Clock high time	THIGH	4000 4000 600	— — —	ns	4.5V ≤ Vcc ≤ 5.5V (E Temp range) 3.0V ≤ Vcc ≤ 4.5V 4.5V ≤ Vcc ≤ 5.5V
Clock low time	TLOW	4700 4700 1300	— — —	ns	4.5V ≤ Vcc ≤ 5.5V (E Temp range) 3.0V ≤ Vcc ≤ 4.5V 4.5V ≤ Vcc ≤ 5.5V
SDA and SCL rise time (Note 1)	TR	— — —	1000 1000 300	ns	4.5V ≤ Vcc ≤ 5.5V (E Temp range) 3.0V ≤ Vcc ≤ 4.5V 4.5V ≤ Vcc ≤ 5.5V
SDA and SCL fall time	TF	—	300	ns	(Note 1)
START condition hold time	THD:STA	4000 4000 600	— — —	ns	4.5V ≤ Vcc ≤ 5.5V (E Temp range) 3.0V ≤ Vcc ≤ 4.5V 4.5V ≤ Vcc ≤ 5.5V
START condition setup time	TSU:STA	4700 4700 600	— — —	ns	4.5V ≤ Vcc ≤ 5.5V (E Temp range) 3.0V ≤ Vcc ≤ 4.5V 4.5V ≤ Vcc ≤ 5.5V
Data input hold time	THD:DAT	0	—	ns	(Note 2)
Data input setup time	TSU:DAT	250 250 100	— — —	ns	4.5V ≤ Vcc ≤ 5.5V (E Temp range) 3.0V ≤ Vcc ≤ 4.5V 4.5V ≤ Vcc ≤ 5.5V
STOP condition setup time	TSU:STO	4000 4000 600	— — —	ns	4.5V ≤ Vcc ≤ 5.5V (E Temp range) 3.0V ≤ Vcc ≤ 4.5V 4.5V ≤ Vcc ≤ 5.5V
Output valid from clock (Note 2)	TAA	— — —	3500 3500 900	ns	4.5V ≤ Vcc ≤ 5.5V (E Temp range) 3.0V ≤ Vcc ≤ 4.5V 4.5V ≤ Vcc ≤ 5.5V
Bus free time: Time the bus must be free before a new transmission can start	TBUF	4700 4700 1300	— — —	ns	4.5V ≤ Vcc ≤ 5.5V (E Temp range) 3.0V ≤ Vcc ≤ 4.5V 4.5V ≤ Vcc ≤ 5.5V
Output fall time from VIH minimum to VIL maximum	TOF	20+0.1 CB	250	ns	(Note 1), CB ≤ 100 pF
Input filter spike suppression (SDA and SCL pins)	TSP	—	50	ns	(Notes 1, 3)
Write cycle time	TWC	—	4	ms	
Endurance		1M	—	cycles	25°C, VCC = 5.0V, Block Mode (Note 4)

Note 1: Not 100% tested. CB = total capacitance of one bus line in pF.

2: As a transmitter, the device must provide an internal minimum delay time to bridge the undefined region (minimum 300 ns) of the falling edge of SCL to avoid unintended generation of START or STOP conditions.

3: The combined TSP and VHYS specifications are due to new Schmitt trigger inputs which provide improved noise spike suppression. This eliminates the need for a TI specification for standard operation.

4: This parameter is not tested but guaranteed by characterization. For endurance estimates in a specific application, please consult the Total Endurance Model which can be obtained on Microchip's website.

NOTES:

© 1999 Microchip Technology Inc.

14.0 DC AND AC CHARACTERISTICS - PIC12C508A/PIC12C509A/ PIC12LC508A/PIC12LC509A, PIC12CE518/PIC12CE519/PIC12CR509A/ PIC12LCE518/PIC12LCE519/ PIC12LCR509A

The graphs and tables provided in this section are for design guidance and are not tested. In some graphs or tables the data presented are outside specified operating range (e.g., outside specified VDD range). This is for information only and devices will operate properly only within the specified range.

The data presented in this section is a statistical summary of data collected on units from different lots over a period of time. “Typical” represents the mean of the distribution while “max” or “min” represents (mean + 3σ) and (mean – 3σ) respectively, where σ is standard deviation.

FIGURE 14-1: CALIBRATED INTERNAL RC FREQUENCY RANGE VS. TEMPERATURE (VDD = 5.0V) (INTERNAL RC IS CALIBRATED TO 25°C, 5.0V)

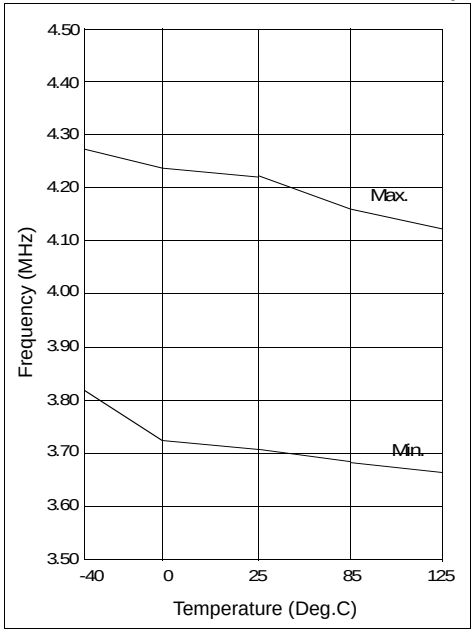

FIGURE 14-2: CALIBRATED INTERNAL RC FREQUENCY RANGE VS. TEMPERATURE (VDD = 2.5V) (INTERNAL RC IS CALIBRATED TO 25°C, 5.0V)

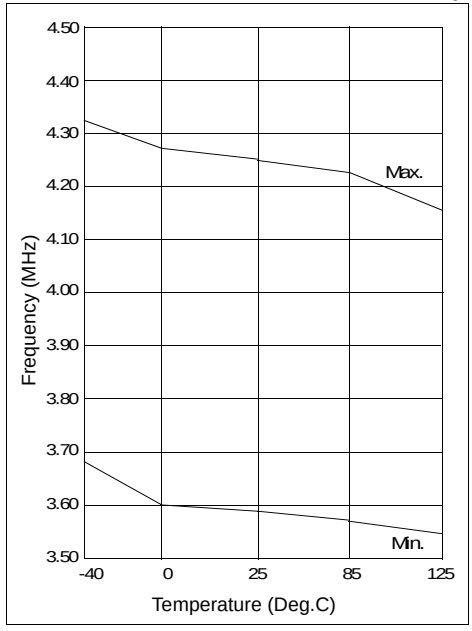

TABLE 14-1: DYNAMIC I_{DD} (TYPICAL) - WDT ENABLED, 25°C

Oscillator	Frequency	V_{DD} =3.0V	V_{DD} = 5.5V
External RC	4 MHz	240 µA*	800 µA*
Internal RC	4 MHz	320 µA	800 µA
XT	4 MHz	300 µA	800 µA
LP	32 KHz	19 µA	50 µA

*Does not include current through external R&C.

FIGURE 14-3: TYPICAL I_{DD} VS. V_{DD} (WDT DIS, 25°C, FREQUENCY = 4MHz)

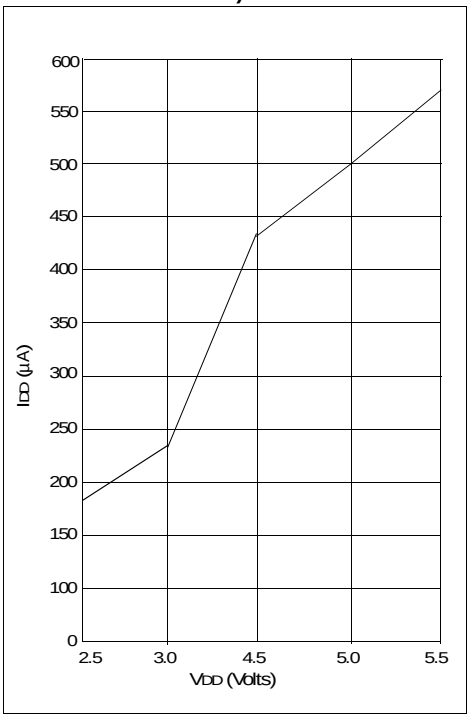

FIGURE 14-4: TYPICAL I_{DD} VS. FREQUENCY (WDT DIS, 25°C, V_{DD} = 5.5V)

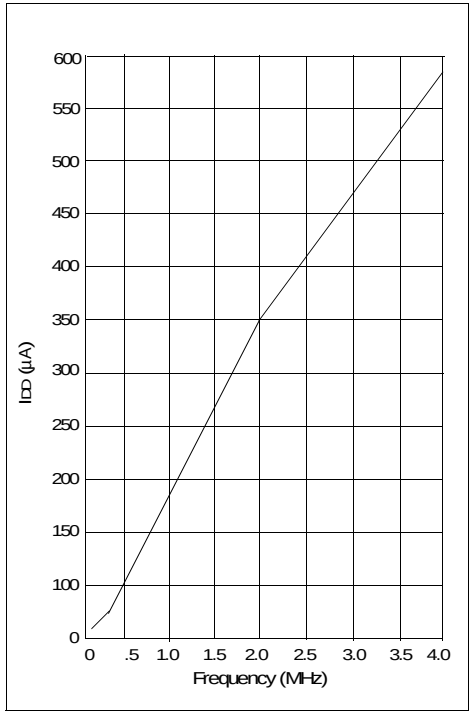

© 1999 Microchip Technology Inc.

FIGURE 14-5: WDT TIMER TIME-OUT PERIOD vs. VDD

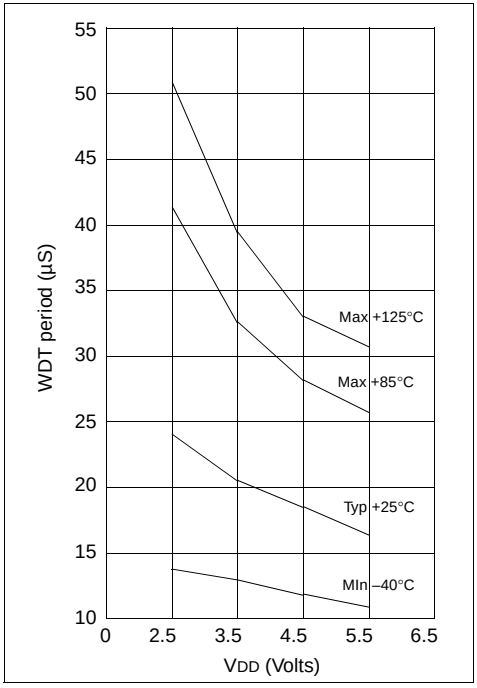

FIGURE 14-6: SHORT DRT PERIOD VS. VDD

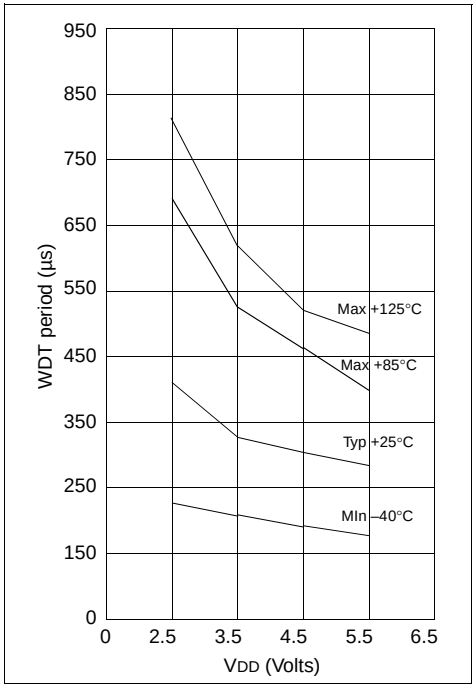

FIGURE 14-7: IOH vs. VOH, VDD = 2.5 V

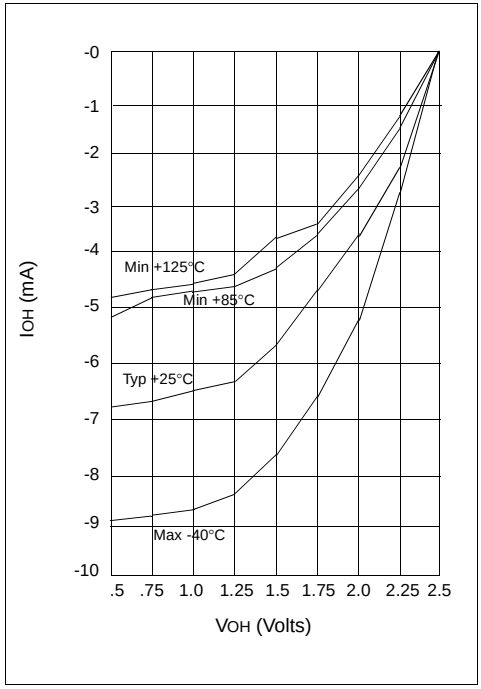

FIGURE 14-8: IOH vs. VOH, VDD = 3.5 V

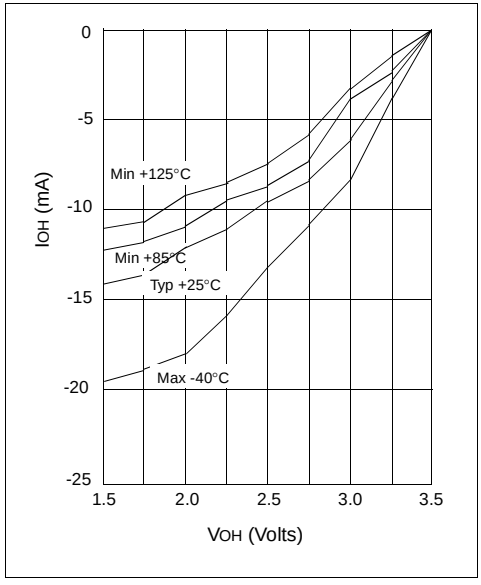

FIGURE 14-9: IOL vs. VOL, VDD = 2.5 V

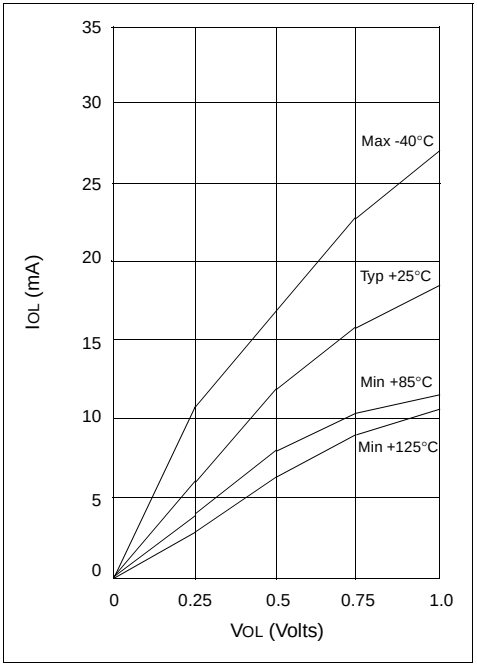

FIGURE 14-10: IOL vs. VOL, VDD = 3.5 V

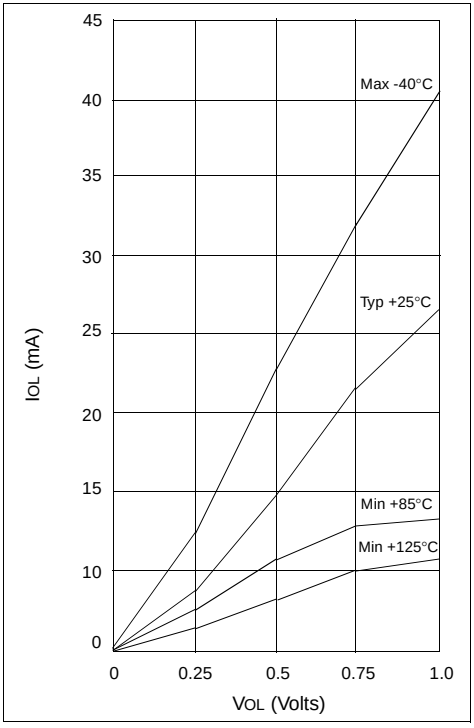

FIGURE 14-11: IOH vs. VOH, VDD = 5.5 V

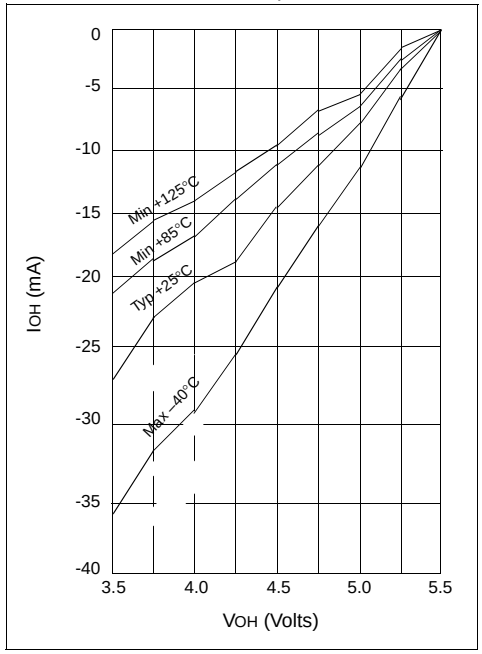

FIGURE 14-12: IOL vs. VOL, VDD = 5.5 V

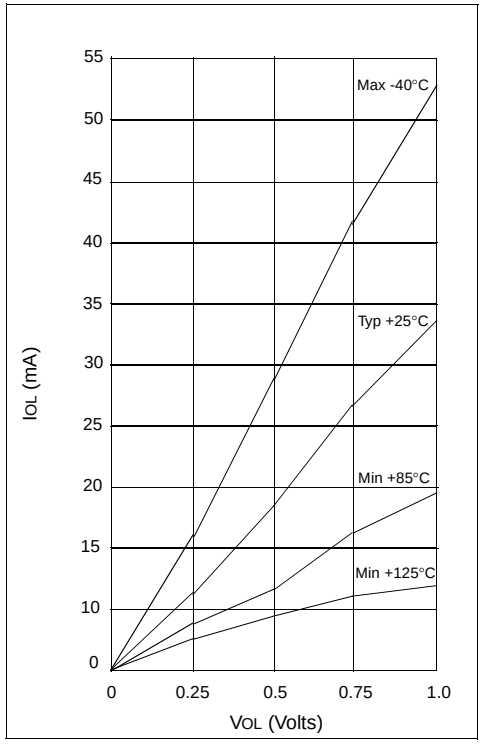

© 1999 Microchip Technology Inc.

FIGURE 14-13: TYPICAL IPD VS. VDD, WATCHDOG DISABLED (25°C)

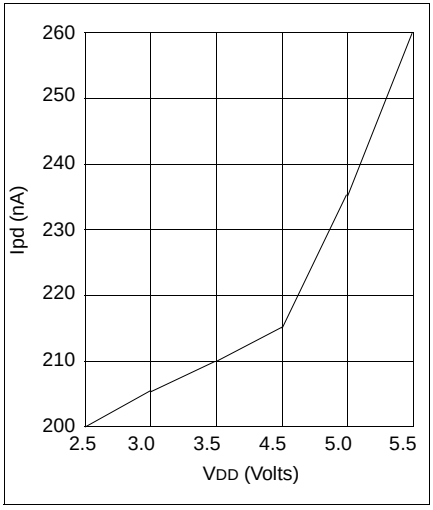

FIGURE 14-14: VTH (INPUT THRESHOLD VOLTAGE) OF GPIO PINS VS. VDD

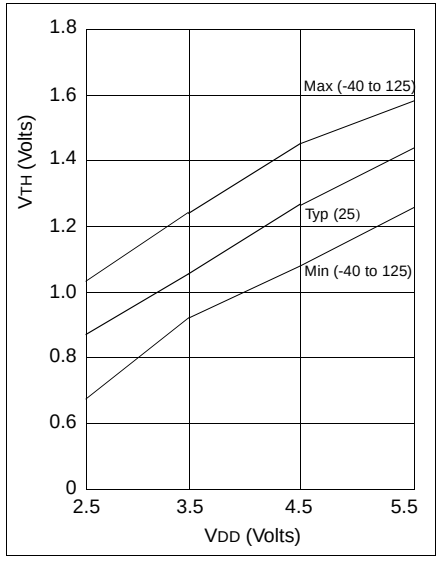

FIGURE 14-15: VIL, VIH OF NMCLR, AND T0CKI VS. VDD

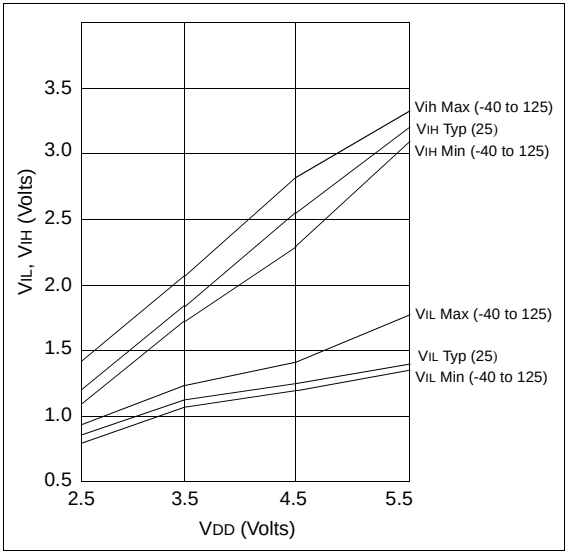

© 1999 Microchip Technology Inc.

15.0 PACKAGING INFORMATION

15.1 Package Marking Information

8-Lead PDIP (300 mil)

```
XXXXXXXX
XXXXXCDE
AABB
```

Example

```
12C508A
04I/PSAZ
9825
```

8-Lead SOIC (150 mil)

```
XXXXXXX
AABB
```

Example

```
C508A
9825
```

8-Lead SOIC (208 mil)

```
XXXXXXX
XXXXXXX
AABBCDE
```

Example

```
12C508A
04I/SM
9824SAZ
```

8-Lead Windowed Ceramic Side Brazed (300 mil)

```
XXX
XXXXXX
```

Example

```
JW
12C508A
```

Legend:	MM...M	Microchip part number information
	XX...X	Customer specific information*
	AA	Year code (last 2 digits of calendar year)
	BB	Week code (week of January 1 is week ‘01’)
	C	Facility code of the plant at which wafer is manufactured O = Outside Vendor C = 5” Line S = 6” Line H = 8” Line
	D	Mask revision number
	E	Assembly code of the plant or country of origin in which part was assembled
Note:	In the event the full Microchip part number cannot be marked on one line, it will be carried over to the next line thus limiting the number of available characters for customer specific information.	

* Standard OTP marking consists of Microchip part number, year code, week code, facility code, mask rev#, and assembly code. For OTP marking beyond this, certain price adders apply. Please check with your Microchip Sales Office. For QTP devices, any special marking adders are included in QTP price.

Package Type: K04-018 8-Lead Plastic Dual In-line (P) – 300 mil

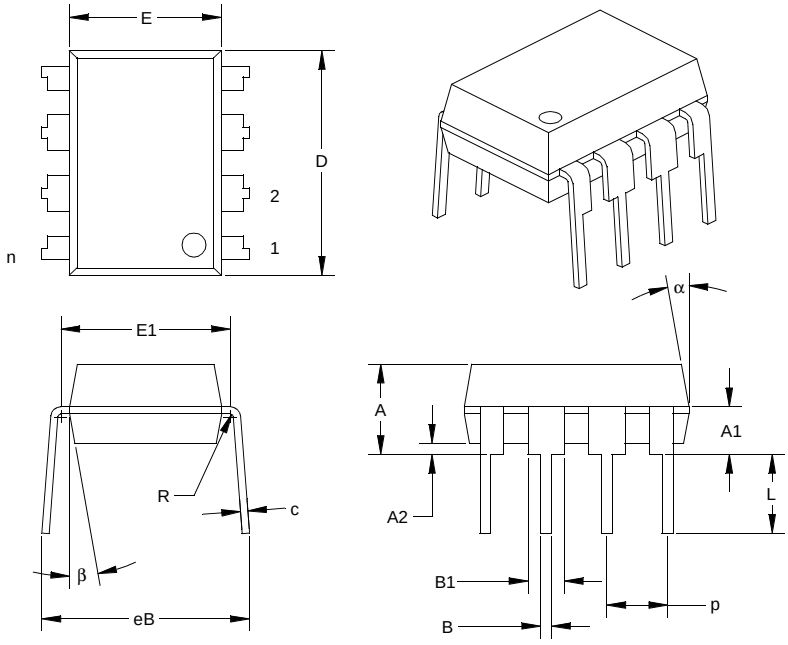

Units		INCHES*			MILLIMETERS		
Dimension Limits		MIN	NOM	MAX	MIN	NOM	MAX
PCB Row Spacing			0.300			7.62	
Number of Pins	n		8			8	
Pitch	p		0.100			2.54	
Lower Lead Width	B	0.014	0.018	0.022	0.36	0.46	0.56
Upper Lead Width	B1†	0.055	0.060	0.065	1.40	1.52	1.65
Shoulder Radius	R	0.000	0.005	0.010	0.00	0.13	0.25
Lead Thickness	c	0.006	0.012	0.015	0.20	0.29	0.38
Top to Seating Plane	A	0.140	0.150	0.160	3.56	3.81	4.06
Top of Lead to Seating Plane	A1	0.060	0.080	0.100	1.52	2.03	2.54
Base to Seating Plane	A2	0.005	0.020	0.035	0.13	0.51	0.89
Tip to Seating Plane	L	0.120	0.130	0.140	3.05	3.30	3.56
Package Length	D‡	0.355	0.370	0.385	9.02	9.40	9.78
Molded Package Width	E‡	0.245	0.250	0.260	6.22	6.35	6.60
Radius to Radius Width	E1	0.267	0.280	0.292	6.78	7.10	7.42
Overall Row Spacing	eB	0.310	0.342	0.380	7.87	8.67	9.65
Mold Draft Angle Top	α	5	10	15	5	10	15
Mold Draft Angle Bottom	β	5	10	15	5	10	15

* Controlling Parameter.

† Dimension “B1” does not include dam-bar protrusions. Dam-bar protrusions shall not exceed 0.003” (0.076 mm) per side or 0.006” (0.152 mm) more than dimension “B1.”

‡ Dimensions “D” and “E” do not include mold flash or protrusions. Mold flash or protrusions shall not exceed 0.010” (0.254 mm) per side or 0.020” (0.508 mm) more than dimensions “D” or “E.”

© 1999 Microchip Technology Inc.

Package Type: K04-057 8-Lead Plastic Small Outline (SN) – Narrow, 150 mil

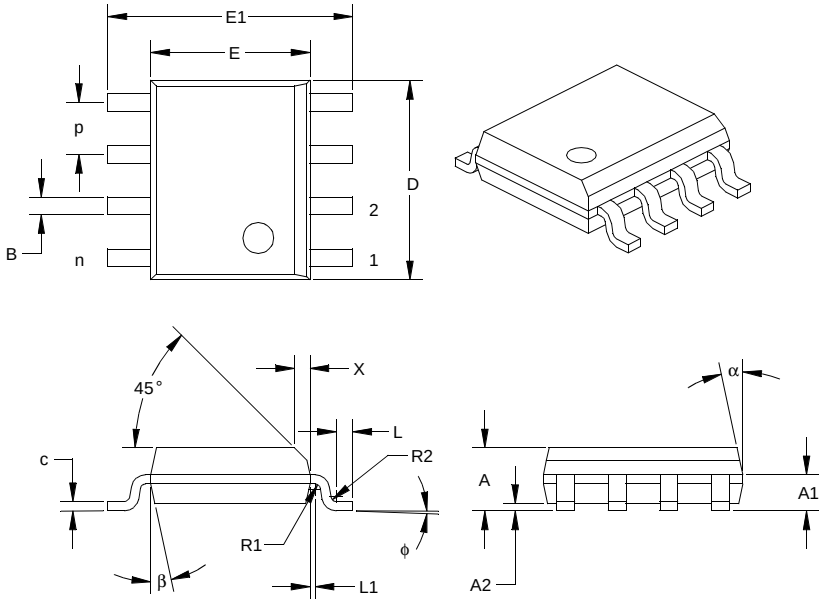

Units		INCHES*			MILLIMETERS		
Dimension Limits		MIN	NOM	MAX	MIN	NOM	MAX
Pitch	p		0.050			1.27	
Number of Pins	n		8			8	
Overall Pack. Height	A	0.054	0.061	0.069	1.37	1.56	1.75
Shoulder Height	A1	0.027	0.035	0.044	0.69	0.90	1.11
Standoff	A2	0.004	0.007	0.010	0.10	0.18	0.25
Molded Package Length	D‡	0.189	0.193	0.196	4.80	4.89	4.98
Molded Package Width	E‡	0.150	0.154	0.157	3.81	3.90	3.99
Outside Dimension	E1	0.229	0.237	0.244	5.82	6.01	6.20
Chamfer Distance	X	0.010	0.015	0.020	0.25	0.38	0.51
Shoulder Radius	R1	0.005	0.005	0.010	0.13	0.13	0.25
Gull Wing Radius	R2	0.005	0.005	0.010	0.13	0.13	0.25
Foot Length	L	0.011	0.016	0.021	0.28	0.41	0.53
Foot Angle	ϕ	0	4	8	0	4	8
Radius Centerline	L1	0.000	0.005	0.010	0.00	0.13	0.25
Lead Thickness	c	0.008	0.009	0.010	0.19	0.22	0.25
Lower Lead Width	B†	0.014	0.017	0.020	0.36	0.43	0.51
Mold Draft Angle Top	α	0	12	15	0	12	15
Mold Draft Angle Bottom	β	0	12	15	0	12	15

* Controlling Parameter.

† Dimension “B” does not include dam-bar protrusions. Dam-bar protrusions shall not exceed 0.003” (0.076 mm) per side or 0.006” (0.152 mm) more than dimension “B.”

‡ Dimensions “D” and “E” do not include mold flash or protrusions. Mold flash or protrusions shall not exceed 0.010” (0.254 mm) per side or 0.020” (0.508 mm) more than dimensions “D” or “E.”

© 1999 Microchip Technology Inc.

Package Type: K04-056 8-Lead Plastic Small Outline (SM) – Medium, 208 mil

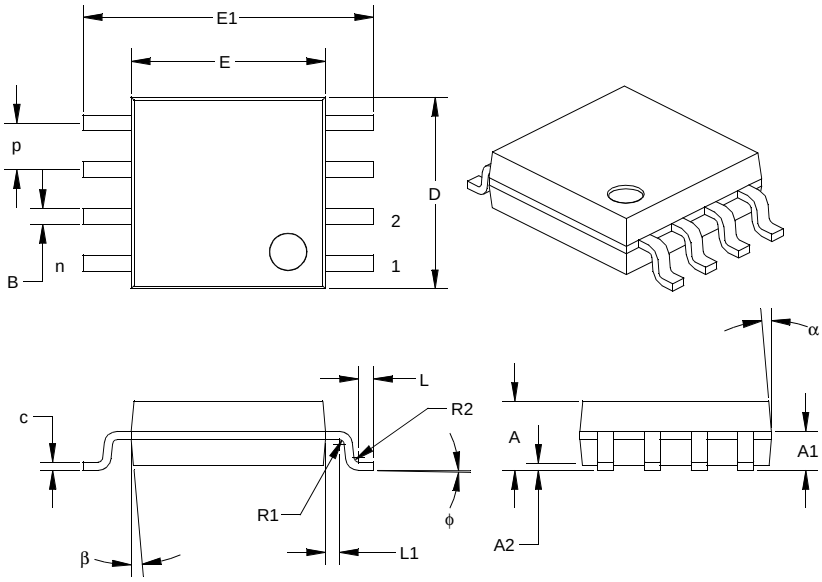

Units		INCHES*			MILLIMETERS		
Dimension Limits		MIN	NOM	MAX	MIN	NOM	MAX
Pitch	p		0.050			1.27	
Number of Pins	n		8			8	
Overall Pack. Height	A	0.070	0.074	0.079	1.78	1.89	2.00
Shoulder Height	A1	0.037	0.042	0.048	0.94	1.08	1.21
Standoff	A2	0.002	0.005	0.009	0.05	0.14	0.22
Molded Package Length	D‡	0.200	0.205	0.210	5.08	5.21	5.33
Molded Package Width	E‡	0.203	0.208	0.213	5.16	5.28	5.41
Outside Dimension	E1	0.300	0.313	0.325	7.62	7.94	8.26
Shoulder Radius	R1	0.005	0.005	0.010	0.13	0.13	0.25
Gull Wing Radius	R2	0.005	0.005	0.010	0.13	0.13	0.25
Foot Length	L	0.011	0.016	0.021	0.28	0.41	0.53
Foot Angle	ϕ	0	4	8	0	4	8
Radius Centerline	L1	0.010	0.015	0.020	0.25	0.38	0.51
Lead Thickness	c	0.008	0.009	0.010	0.19	0.22	0.25
Lower Lead Width	B†	0.014	0.017	0.020	0.36	0.43	0.51
Mold Draft Angle Top	α	0	12	15	0	12	15
Mold Draft Angle Bottom	β	0	12	15	0	12	15

* Controlling Parameter.

† Dimension “B” does not include dam-bar protrusions. Dam-bar protrusions shall not exceed 0.003” (0.076 mm) per side or 0.006” (0.152 mm) more than dimension “B.”

‡ Dimensions “D” and “E” do not include mold flash or protrusions. Mold flash or protrusions shall not exceed 0.010” (0.254 mm) per side or 0.020” (0.508 mm) more than dimensions “D” or “E.”

© 1999 Microchip Technology Inc.

Package Type: K04-084 8-Lead Ceramic Side Brazed Dual In-line with Window (JW) – 300 mil

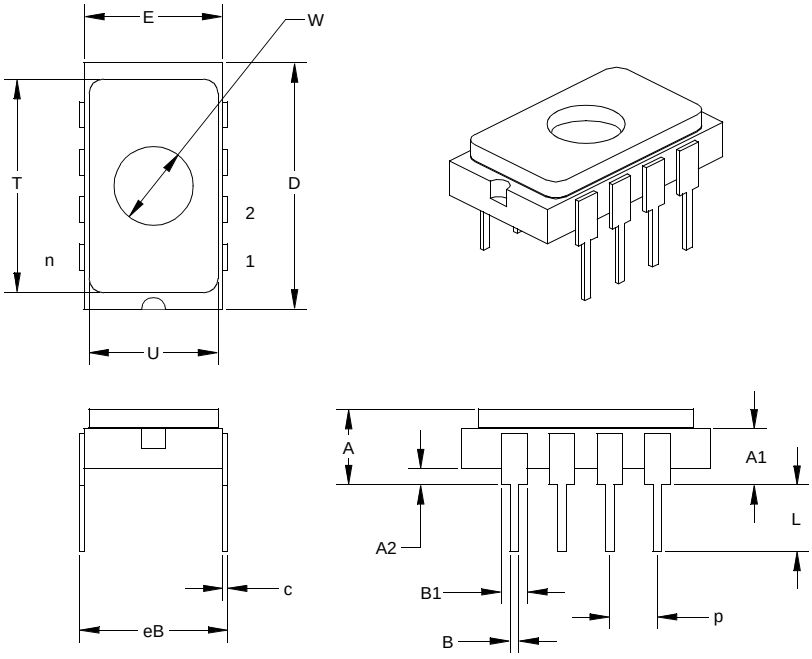

Units		INCHES*			MILLIMETERS		
Dimension Limits		MIN	NOM	MAX	MIN	NOM	MAX
PCB Row Spacing			0.300			7.62	
Number of Pins	n		8			8	
Pitch	p	0.098	0.100	0.102	2.49	2.54	2.59
Lower Lead Width	B	0.016	0.018	0.020	0.41	0.46	0.51
Upper Lead Width	B1	0.050	0.055	0.060	1.27	1.40	1.52
Lead Thickness	c	0.008	0.010	0.012	0.20	0.25	0.30
Top to Seating Plane	A	0.145	0.165	0.185	3.68	4.19	4.70
Top of Body to Seating Plane	A1	0.103	0.123	0.143	2.62	3.12	3.63
Base to Seating Plane	A2	0.025	0.035	0.045	0.64	0.89	1.14
Tip to Seating Plane	L	0.130	0.140	0.150	3.30	3.56	3.81
Package Length	D	0.510	0.520	0.530	12.95	13.21	13.46
Package Width	E	0.280	0.290	0.300	7.11	7.37	7.62
Overall Row Spacing	eB	0.310	0.338	0.365	7.87	8.57	9.27
Window Diameter	W	0.161	0.166	0.171	4.09	4.22	4.34
Lid Length	T	0.440	0.450	0.460	11.18	11.43	11.68
Lid Width	U	0.260	0.270	0.280	6.60	6.86	7.11

* Controlling Parameter.

NOTES:

© 1999 Microchip Technology Inc.

INDEX

A
ALU 9
Applications 4
Architectural Overview 9
Assembler
    MPASM Assembler 61

B
Block Diagram
    On-Chip Reset Circuit 41
    Timer0 25
    TMR0/WDT Prescaler 28
    Watchdog Timer 43
Brown-Out Protection Circuit 44

C
CAL0 bit 18
CAL1 bit 18
CAL2 bit 18
CAL3 bit 18
CALFST bit 18
CALSLW bit 18
Carry 9
Clocking Scheme 12
Code Protection 35, 45
Configuration Bits 35
Configuration Word 35

D
DC and AC Characteristics 75, 93
Development Support 59
Development Tools 59
Device Varieties 7
Digit Carry 9

E
EEPROM Peripheral Operation 29
Errata 3

F
Family of Devices 5
Features 1
FSR 20
Fuzzy Logic Dev. System (*fuzzy*TECH®-MP) 61

I
I/O Interfacing 21
I/O Ports 21
I/O Programming Considerations 22
ICEPIC Low-Cost PIC16CXXX In-Circuit Emulator 59
ID Locations 35, 45
INDF 20
Indirect Data Addressing 20
Instruction Cycle 12
Instruction Flow/Pipelining 12
Instruction Set Summary 48

K
KeeLoq® Evaluation and Programming Tools 62

L
Loading of PC 19

M
Memory Organization 13
    Data Memory 14
    Program Memory 13
MPLAB Integrated Development Environment Software 61

O
OPTION Register 17
OSC selection 35
OSCCAL Register 18
Oscillator Configurations 36
Oscillator Types
    HS 36
    LP 36
    RC 36
    XT 36

P
Package Marking Information 99
Packaging Information 99
PICDEM-1 Low-Cost PICmicro Demo Board 60
PICDEM-2 Low-Cost PIC16CXX Demo Board 60
PICDEM-3 Low-Cost PIC16CXXX Demo Board 60
PICSTART® Plus Entry Level Development System 59
POR
    Device Reset Timer (DRT) 35, 42
    $\overline{\text{PD}}$ 44
    Power-On Reset (POR) 35
    $\overline{\text{TO}}$ 44
PORTA 21
Power-Down Mode 45
Prescaler 28
PRO MATE® II Universal Programmer 59
Program Counter 19

Q
Q cycles 12

R
RC Oscillator 37
Read Modify Write 22
Register File Map 14
Registers
    Special Function 15
Reset 35
Reset on Brown-Out 44

S
SEEVAL® Evaluation and Programming System 61
SLEEP 35, 45
Software Simulator (MPLAB-SIM) 61
Special Features of the CPU 35
Special Function Registers 15
Stack 19
STATUS 9
STATUS Register 16

T
Timer0
    Switching Prescaler Assignment 28
    Timer0 25
    Timer0 (TMR0) Module 25
    TMR0 with External Clock 27
Timing Diagrams and Specifications 70, 86
Timing Parameter Symbology and Load Conditions 69, 85
TRIS Registers 21

W
Wake-up from SLEEP 45
Watchdog Timer (WDT) 35, 42
    Period 43
    Programming Considerations 43
WWW, On-Line Support 3

Z
Zero bit 9

© 1999 Microchip Technology Inc.

© 1999 Microchip Technology Inc.

ON-LINE SUPPORT

Microchip provides on-line support on the Microchip World Wide Web (WWW) site.

The web site is used by Microchip as a means to make files and information easily available to customers. To view the site, the user must have access to the Internet and a web browser, such as Netscape or Microsoft Explorer. Files are also available for FTP download from our FTP site.

Connecting to the Microchip Internet Web Site

The Microchip web site is available by using your favorite Internet browser to attach to:

www.microchip.com

The file transfer site is available by using an FTP service to connect to:

ftp://ftp.microchip.com

The web site and file transfer site provide a variety of services. Users may download files for the latest Development Tools, Data Sheets, Application Notes, User's Guides, Articles and Sample Programs. A variety of Microchip specific business information is also available, including listings of Microchip sales offices, distributors and factory representatives. Other data available for consideration is:

- Latest Microchip Press Releases
- Technical Support Section with Frequently Asked Questions
- Design Tips
- Device Errata
- Job Postings
- Microchip Consultant Program Member Listing
- Links to other useful web sites related to Microchip Products
- Conferences for products, Development Systems, technical information and more
- Listing of seminars and events

Systems Information and Upgrade Hot Line

The Systems Information and Upgrade Line provides system users a listing of the latest versions of all of Microchip's development systems software products. Plus, this line provides information on how customers can receive any currently available upgrade kits.The Hot Line Numbers are:

1-800-755-2345 for U.S. and most of Canada, and

1-602-786-7302 for the rest of the world.

981103

Trademarks: The Microchip name, logo, PIC, PICmicro, PICSTART, PICMASTER and PRO MATE are registered trademarks of Microchip Technology Incorporated in the U.S.A. and other countries. *Flex*ROM, MPLAB and *fuzzy*-LAB are trademarks and SQTP is a service mark of Microchip in the U.S.A.

All other trademarks mentioned herein are the property of their respective companies.

READER RESPONSE

It is our intention to provide you with the best documentation possible to ensure successful use of your Microchip product. If you wish to provide your comments on organization, clarity, subject matter, and ways in which our documentation can better serve you, please FAX your comments to the Technical Publications Manager at (602) 786-7578.

Please list the following information, and use this outline to provide us with your comments about this Data Sheet.

To: Technical Publications Manager Total Pages Sent

RE: Reader Response

From: Name _____

Company _____

Address _____

City / State / ZIP / Country _____

Telephone: (_____) _____ - _____ FAX: (_____) _____ - _____

Application (optional):

Would you like a reply? ___Y ___N

Device: **PIC12C5XX** Literature Number: **DS40139E**

Questions:

1. What are the best features of this document?

_____

_____

2. How does this document meet your hardware and software development needs?

_____

_____

3. Do you find the organization of this data sheet easy to follow? If not, why?

_____

_____

4. What additions to the data sheet do you think would enhance the structure and subject?

_____

_____

5. What deletions from the data sheet could be made without affecting the overall usefulness?

_____

_____

6. Is there any incorrect or misleading information (what and where)?

_____

_____

7. How would you improve this document?

_____

_____

8. How would you improve our software, systems, and silicon products?

_____

_____

© 1999 Microchip Technology Inc.

PIC12C5XX Product Identification System

PART NO. -XX X /XX XXX

Pattern: Special Requirements

Package:
- SN = 150 mil SOIC
- SM = 208 mil SOIC
- P = 300 mil PDIP
- JW = 300 mil Windowed Ceramic Side Brazed

Temperature Range:
- - = 0°C to +70°C
- I = -40°C to +85°C
- E = -40°C to +125°C

Frequency Range: 04 = 4 MHz

Device
- PIC12C508
- PIC12C509
- PIC12C508T (Tape & reel for SOIC only)
- PIC12C509T (Tape & reel for SOIC only)
- PIC12C508A
- PIC12C509A
- PIC12C508AT (Tape & reel for SOIC only)
- PIC12C509AT (Tape & reel for SOIC only)
- PIC12LC508A
- PIC12LC509A
- PIC12LC508AT (Tape & reel for SOIC only)
- PIC12LC509AT (Tape & reel for SOIC only)
- PIC12CR509A
- PIC12CR509AT (Tape & reel for SOIC only)
- PIC12LCR509A
- PIC12LCR509AT (Tape & reel for SOIC only)
- PIC12CE518
- PIC12CE518T (Tape & reel for SOIC only)
- PIC12CE519
- PIC12CE519T (Tape & reel for SOIC only)
- PIC12LCE518
- PIC12LCE518T (Tape & reel for SOIC only)
- PIC12LCE519
- PIC12LCE519T (Tape & reel for SOIC only)

Examples

a) PIC12C508A-04/P Commercial Temp., PDIP Package, 4 MHz, normal V_{DD} limits

b) PIC12C508A-04I/SM Industrial Temp., SOIC package, 4 MHz, normal V_{DD} limits

c) PIC12C509-04I/P Industrial Temp., PDIP package, 4 MHz, normal V_{DD} limits

Please contact your local sales office for exact ordering procedures.

Sales and Support:

Data Sheets

Products supported by a preliminary Data Sheet may have an errata sheet describing minor operational differences and recommended workarounds. To determine if an errata sheet exists for a particular device, please contact one of the following:

1. Your local Microchip sales office
2. The Microchip Corporate Literature Center U.S. FAX: (602) 786-7277
3. The Microchip Worldwide Site (www.microchip.com)

Please specify which device, revision of silicon and Data Sheet (include Literature #) you are using.

New Customer Notification System

Register on our web site (www.microchip.com/cn) to receive the most current information on our products.

NOTES:

© 1999 Microchip Technology Inc.

NOTES:

Note the following details of the code protection feature on PICmicro® MCUs.

- The PICmicro family meets the specifications contained in the Microchip Data Sheet.
- Microchip believes that its family of PICmicro microcontrollers is one of the most secure products of its kind on the market today, when used in the intended manner and under normal conditions.
- There are dishonest and possibly illegal methods used to breach the code protection feature. All of these methods, to our knowledge, require using the PICmicro microcontroller in a manner outside the operating specifications contained in the data sheet. The person doing so may be engaged in theft of intellectual property.
- Microchip is willing to work with the customer who is concerned about the integrity of their code.
- Neither Microchip nor any other semiconductor manufacturer can guarantee the security of their code. Code protection does not mean that we are guaranteeing the product as “unbreakable”.
- Code protection is constantly evolving. We at Microchip are committed to continuously improving the code protection features of our product.

If you have any further questions about this matter, please contact the local sales office nearest to you.

Information contained in this publication regarding device applications and the like is intended through suggestion only and may be superseded by updates. It is your responsibility to ensure that your application meets with your specifications. No representation or warranty is given and no liability is assumed by Microchip Technology Incorporated with respect to the accuracy or use of such information, or infringement of patents or other intellectual property rights arising from such use or otherwise. Use of Microchip’s products as critical components in life support systems is not authorized except with express written approval by Microchip. No licenses are conveyed, implicitly or otherwise, under any intellectual property rights.

Trademarks

The Microchip name and logo, the Microchip logo, FilterLab, KEELOQ, microID, MPLAB, PIC, PICmicro, PICMASTER, PICSTART, PRO MATE, SEEVAL and The Embedded Control Solutions Company are registered trademarks of Microchip Technology Incorporated in the U.S.A. and other countries.

dsPIC, ECONOMONITOR, FanSense, FlexROM, fuzzyLAB, In-Circuit Serial Programming, ICSP, ICEPIC, microPort, Migratable Memory, MPASM, MPLIB, MPLINK, MPSIM, MXDEV, PICC, PICDEM, PICDEM.net, rfPIC, Select Mode and Total Endurance are trademarks of Microchip Technology Incorporated in the U.S.A.

Serialized Quick Turn Programming (SQTP) is a service mark of Microchip Technology Incorporated in the U.S.A.

All other trademarks mentioned herein are property of their respective companies.

© 2002, Microchip Technology Incorporated, Printed in the U.S.A., All Rights Reserved.

Printed on recycled paper.

DNV Certification, Inc. USA
ANSI • RAB QMS ACCREDITED
DNV MSC The Netherlands Accredited by the RvA
DNV
ISO 9001 / QS-9000 REGISTERED FIRM

Microchip received QS-9000 quality system certification for its worldwide headquarters, design and wafer fabrication facilities in Chandler and Tempe, Arizona in July 1999. The Company’s quality system processes and procedures are QS-9000 compliant for its PICmicro® 8-bit MCUs, KEELOQ® code hopping devices, Serial EEPROMs and microperipheral products. In addition, Microchip’s quality system for the design and manufacture of development systems is ISO 9001 certified.

WORLDWIDE SALES AND SERVICE

AMERICAS

Corporate Office
2355 West Chandler Blvd.
Chandler, AZ 85224-6199
Tel: 480-792-7200 Fax: 480-792-7277
Technical Support: 480-792-7627
Web Address: http://www.microchip.com

Rocky Mountain
2355 West Chandler Blvd.
Chandler, AZ 85224-6199
Tel: 480-792-7966 Fax: 480-792-7456

Atlanta
500 Sugar Mill Road, Suite 200B
Atlanta, GA 30350
Tel: 770-640-0034 Fax: 770-640-0307

Boston
2 Lan Drive, Suite 120
Westford, MA 01886
Tel: 978-692-3848 Fax: 978-692-3821

Chicago
333 Pierce Road, Suite 180
Itasca, IL 60143
Tel: 630-285-0071 Fax: 630-285-0075

Dallas
4570 Westgrove Drive, Suite 160
Addison, TX 75001
Tel: 972-818-7423 Fax: 972-818-2924

Detroit
Tri-Atria Office Building
32255 Northwestern Highway, Suite 190
Farmington Hills, MI 48334
Tel: 248-538-2250 Fax: 248-538-2260

Kokomo
2767 S. Albright Road
Kokomo, Indiana 46902
Tel: 765-864-8360 Fax: 765-864-8387

Los Angeles
18201 Von Karman, Suite 1090
Irvine, CA 92612
Tel: 949-263-1888 Fax: 949-263-1338

New York
150 Motor Parkway, Suite 202
Hauppauge, NY 11788
Tel: 631-273-5305 Fax: 631-273-5335

San Jose
Microchip Technology Inc.
2107 North First Street, Suite 590
San Jose, CA 95131
Tel: 408-436-7950 Fax: 408-436-7955

Toronto
6285 Northam Drive, Suite 108
Mississauga, Ontario L4V 1X5, Canada
Tel: 905-673-0699 Fax: 905-673-6509

ASIA/PACIFIC

Australia
Microchip Technology Australia Pty Ltd
Suite 22, 41 Rawson Street
Epping 2121, NSW
Australia
Tel: 61-2-9868-6733 Fax: 61-2-9868-6755

China - Beijing
Microchip Technology Consulting (Shanghai) Co., Ltd., Beijing Liaison Office
Unit 915
Bei Hai Wan Tai Bldg.
No. 6 Chaoyangmen Beidajie
Beijing, 100027, No. China
Tel: 86-10-85282100 Fax: 86-10-85282104

China - Chengdu
Microchip Technology Consulting (Shanghai) Co., Ltd., Chengdu Liaison Office
Rm. 2401, 24th Floor,
Ming Xing Financial Tower
No. 88 TIDU Street
Chengdu 610016, China
Tel: 86-28-6766200 Fax: 86-28-6766599

China - Fuzhou
Microchip Technology Consulting (Shanghai) Co., Ltd., Fuzhou Liaison Office
Unit 28F, World Trade Plaza
No. 71 Wusi Road
Fuzhou 350001, China
Tel: 86-591-7503506 Fax: 86-591-7503521

China - Shanghai
Microchip Technology Consulting (Shanghai) Co., Ltd.
Room 701, Bldg. B
Far East International Plaza
No. 317 Xian Xia Road
Shanghai, 200051
Tel: 86-21-6275-5700 Fax: 86-21-6275-5060

China - Shenzhen
Microchip Technology Consulting (Shanghai) Co., Ltd., Shenzhen Liaison Office
Rm. 1315, 13/F, Shenzhen Kerry Centre,
Renminnan Lu
Shenzhen 518001, China
Tel: 86-755-2350361 Fax: 86-755-2366086

Hong Kong
Microchip Technology Hongkong Ltd.
Unit 901-6, Tower 2, Metroplaza
223 Hing Fong Road
Kwai Fong, N.T., Hong Kong
Tel: 852-2401-1200 Fax: 852-2401-3431

India
Microchip Technology Inc.
India Liaison Office
Divyasree Chambers
1 Floor, Wing A (A3/A4)
No. 11, O'Shaugnessey Road
Bangalore, 560 025, India
Tel: 91-80-2290061 Fax: 91-80-2290062

Japan
Microchip Technology Japan K.K.
Benex S-1 6F
3-18-20, Shinyokohama
Kohoku-Ku, Yokohama-shi
Kanagawa, 222-0033, Japan
Tel: 81-45-471- 6166 Fax: 81-45-471-6122

Korea
Microchip Technology Korea
168-1, Youngbo Bldg. 3 Floor
Samsung-Dong, Kangnam-Ku
Seoul, Korea 135-882
Tel: 82-2-554-7200 Fax: 82-2-558-5934

Singapore
Microchip Technology Singapore Pte Ltd.
200 Middle Road
#07-02 Prime Centre
Singapore, 188980
Tel: 65-334-8870 Fax: 65-334-8850

Taiwan
Microchip Technology Taiwan
11F-3, No. 207
Tung Hua North Road
Taipei, 105, Taiwan
Tel: 886-2-2717-7175 Fax: 886-2-2545-0139

EUROPE

Denmark
Microchip Technology Nordic ApS
Regus Business Centre
Lautrup hoj 1-3
Ballerup DK-2750 Denmark
Tel: 45 4420 9895 Fax: 45 4420 9910

France
Microchip Technology SARL
Parc d'Activite du Moulin de Massy
43 Rue du Saule Trapu
Batiment A - ler Etage
91300 Massy, France
Tel: 33-1-69-53-63-20 Fax: 33-1-69-30-90-79

Germany
Microchip Technology GmbH
Gustav-Heinemann Ring 125
D-81739 Munich, Germany
Tel: 49-89-627-144 0 Fax: 49-89-627-144-44

Italy
Microchip Technology SRL
Centro Direzionale Colleoni
Palazzo Taurus 1 V. Le Colleoni 1
20041 Agrate Brianza
Milan, Italy
Tel: 39-039-65791-1 Fax: 39-039-6899883

United Kingdom
Arizona Microchip Technology Ltd.
505 Eskdale Road
Winnersh Triangle
Wokingham
Berkshire, England RG41 5TU
Tel: 44 118 921 5869 Fax: 44-118 921-5820

01/18/02

© 2002 Microchip Technology Inc.