50-mW ULTRALOW VOLTAGE STEREO HEADPHONE AUDIO POWER AMPLIFIER

FEATURES

- **50-mW Stereo Output**
- **Low Supply Current . . . 0.75 mA**
- **Low Shutdown Current . . . 50 nA**
- **Pin Compatible With LM4881 and TPA102** (1)
- **Pop Reduction Circuitry**
- **Internal Midrail Generation**
- **Thermal and Short-Circuit Protection**
- **Surface-Mount Packaging**
  - **MSOP and SOIC**
- **1.6-V to 3.6-V Supply Voltage Range**

(1) The polarity of the $\overline{\text{SHUTDOWN}}$ pin is reversed.

D PACKAGE (TOP VIEW)

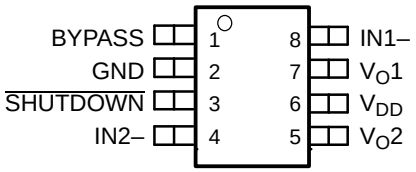

DGK PACKAGE (TOP VIEW)

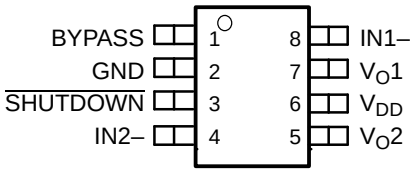

DESCRIPTION

The TPA6100A2D is a stereo audio power amplifier packaged in either an 8-pin SOIC package or an 8-pin MSOP package capable of delivering 50 mW of continuous RMS power per channel into 16-Ω loads. Amplifier gain is externally configured by a means of three resistors per input channel and does not require external compensation for settings of 1 to 10.

The TPA6100A2D is optimized for battery applications because of its low supply current, shutdown current, and THD+N. To obtain the low-supply voltage range, the TPA6100A2D biases BYPASS to $V_{DD}/4$. A resistor with a resistance equal to R_F must be added from the inputs to ground to allow the output to be biased at $V_{DD}/2$.

When driving a 16-Ω load with 45-mW output power from 3.3 V, THD+N is 0.04% at 1 kHz, and less than 0.2% across the audio band of 20 Hz to 20 kHz. For 28 mW into 32-Ω loads, the THD+N is reduced to less than 0.03% at 1 kHz, and is less than 0.2% across the audio band of 20 Hz to 20 kHz.

TYPICAL APPLICATION CIRCUIT

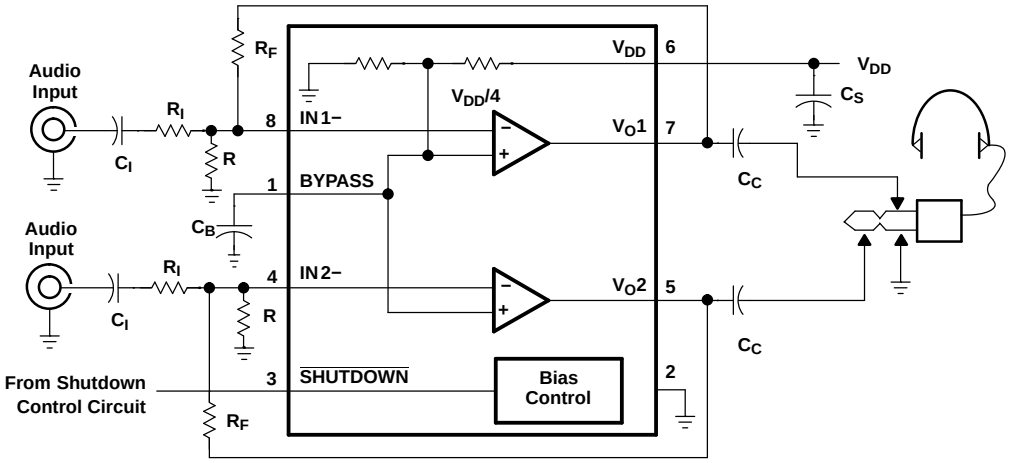

Please be aware that an important notice concerning availability, standard warranty, and use in critical applications of Texas Instruments semiconductor products and disclaimers thereto appears at the end of this data sheet.

PRODUCTION DATA information is current as of publication date. Products conform to specifications per the terms of the Texas Instruments standard warranty. Production processing does not necessarily include testing of all parameters.

Copyright © 2000–2004, Texas Instruments Incorporated

These devices have limited built-in ESD protection. The leads should be shorted together or the device placed in conductive foam during storage or handling to prevent electrostatic damage to the MOS gates.

AVAILABLE OPTIONS

T_A	PACKAGED DEVICE		MSOP SYMBOLIZATION
	SMALL OUTLINE (D)	MSOP(DGK)	
–40°C to 85°C	TPA6100A2D	TPA6100A2DGK	AJL

Terminal Functions

TERMINAL NAME	TERMINAL NO.	I/O	DESCRIPTION
BYPASS	1	I	Tap to voltage divider for internal mid-supply bias supply. BYPASS is set at V_{DD}/4. Connect to a 0.1-µF to 1-µF low-ESR capacitor for best performance.
GND	2	I	GND is the ground connection.
IN1-	8	I	IN1- is the inverting input for channel 1.
IN2-	4	I	IN2- is the inverting input for channel 2.
$\overline{\text{SHUTDOWN}}$	3	I	Active-low input. When held low, the device is placed in a low supply current mode.
V_{DD}	6	I	V_{DD} is the supply voltage terminal.
V_O1	7	O	V_O1 is the audio output for channel 1.
V_O2	5	O	V_O2 is the audio output for channel 2.

ABSOLUTE MAXIMUM RATINGS

over operating free-air temperature range (unless otherwise noted)[(1)]

		UNIT
V_{DD}	Supply voltage	4 V
V_I	Input voltage	–0.3 V to V_{DD} + 0.3 V
	Continuous total power dissipation	Internally limited
T_J	Operating junction temperature range	–40°C to 150°C
T_{stg}	Storage temperature range	–65°C to 150°C
	Lead temperature 1,6 mm (1/16 inch) from case for 10 seconds	260°C

(1) Stresses beyond thoselisted under "absolute maximum ratings" may cause permanent damage to thedevice. These are stress ratings only, and functional operation of the deviceat these or any other conditions beyond those indicated under "recommendedoperating conditions" is not implied. Exposure to absolute-maximum-ratedconditions for extended periods may affect devicereliability.

DISSIPATION RATING TABLE

PACKAGE	$T_A \leq 25°C$ POWER RATING	DERATING FACTOR ABOVE $T_A = 25°C$	$T_A = 70°C$ POWER RATING	$T_A = 85°C$ POWER RATING
D	710 mW	5.68 mW/°C	454 mW	369 mW
DGK	469 mW	3.75 mW/°C	300 mW	244 mW

RECOMMENDED OPERATING CONDITIONS

			MIN	MAX	UNIT
V_{DD}	Supply voltage		1.6	3.6	V
T_A	Operating free-air temperature		–40	85	°C
V_{IH}	High-level input voltage	$\overline{\text{SHUTDOWN}}$	0.6 x V_{DD}		V
V_{IL}	Low-level input voltage	$\overline{\text{SHUTDOWN}}$		0.25 x V_{DD}	V

DC ELECTRICAL CHARACTERISTICS

at T_A = 25°C, V_{DD} = 3.6 V (Unless otherwise noted)

PARAMETER		TEST CONDITIONS	MIN	TYP	MAX	UNIT
V_{OO}	Output offset voltage	A_V = 2 V/V		5	40	mV
PSRR	Power supply rejection ratio	V_{DD} = 3.0 V to 3.6 V		72		dB
I_{DD}	Supply current	$\overline{\text{SHUTDOWN}}$ = 3.6 V		0.75	2.0	mA
$I_{DD(SD)}$	Supply current in $\overline{\text{SHUTDOWN}}$ mode	$\overline{\text{SHUTDOWN}}$ = 0 V		50	250	nA
$\|I_{IH}\|$	High-level input current ($\overline{\text{SHUTDOWN}}$)	V_{DD} = 3.6 V, $V_I = V_{DD}$			1	µA
$\|I_{IL}\|$	Low-level input current ($\overline{\text{SHUTDOWN}}$)	V_{DD} = 3.6 V, V_I = 0 V			1	µA
Z_I	Input impedance (IN1-, IN2-)			> 1		MΩ

AC OPERATING CHARACTERISTICS

V_{DD} = 3.3 V, T_A = 25°C, R_L = 16 Ω

PARAMETER		TEST CONDITIONS	MIN	TYP	MAX	UNIT
P_O	Output power (each channel)	THD ≤ 0.1%, f = 1 kHz		50		mW
THD+N	Total harmonic distortion + noise	P_O = 45 mW, 20 Hz–20 kHz		0.2%		
B_{OM}	Maximum output power BW	G = 1, THD < 0.5%		> 20		kHz
k_{SVR}	Supply ripple rejection	f = 1 kHz		52		dB
SNR	Signal-to-noise ratio	P_O = 50 mW		90		dB
V_n	Noise output voltage (no noise-weighting filter)			28		µV(rms)

AC OPERATING CHARACTERISTICS

V_{DD} = 3.3 V, T_A = 25°C, R_L = 32 Ω

PARAMETER		TEST CONDITIONS	MIN	TYP	MAX	UNIT
P_O	Output power (each channel)	THD ≤ 0.1%, f = 1 kHz		35		mW
THD+N	Total harmonic distortion + noise	P_O = 30 mW, 20 Hz–20 kHz		0.2%		
B_{OM}	Maximum output power BW	G = 1, THD < 0.2%		> 20		kHz
k_{SVR}	Supply ripple rejection	f = 1 kHz		52		dB
SNR	Signal-to-noise ratio	P_O = 35 mW		91		dB
V_n	Noise output voltage (no noise-weighting filter)			28		µV(rms)

DC ELECTRICAL CHARACTERISTICS

at T_A = 25°C, V_{DD} = 1.6 V (Unless otherwise noted)

PARAMETER		TEST CONDITIONS	MIN	TYP	MAX	UNIT
V_{OO}	Output offset voltage	A_V = 2 V/V		5	40	mV
PSRR	Power supply rejection ratio	V_{DD} = 1.5 V to 1.7 V		80		dB
I_{DD}	Supply current	$\overline{\text{SHUTDOWN}}$ = 1.6 V		1.2	1.5	mA
$I_{DD(SD)}$	Supply current in $\overline{\text{SHUTDOWN}}$ mode	$\overline{\text{SHUTDOWN}}$ = 0 V		50	250	nA
$\|I_{IH}\|$	High-level input current ($\overline{\text{SHUTDOWN}}$)	V_{DD} = 1.6 V, V_I= V_{DD}			1	µA
$\|I_{IL}\|$	Low-level input current ($\overline{\text{SHUTDOWN}}$)	V_{DD} = 1.6 V, V_I= 0 V			1	µA
Z_I	Input impedance (IN1-, IN2-)			> 1		MΩ

AC OPERATING CHARACTERISTICS

V_{DD} = 1.6 V, T_A = 25°C, R_L = 16 Ω

PARAMETER		TEST CONDITIONS	MIN	TYP	MAX	UNIT
P_O	Output power (each channel)	THD≤ 0.1%, f = 1 kHz		9.5		mW
THD+N	Total harmonic distortion + noise	P_O = 9.5 mW, 20 Hz–20 kHz		0.4%		
B_{OM}	Maximum output power BW	G = 0 dB, THD < 0.4%		> 20		kHz
k_{SVR}	Supply ripple rejection	f = 1 kHz		53		dB
SNR	Signal-to-noise ratio	P_O = 9.5 mW		86		dB
V_n	Noise output voltage (no noise-weighting filter)			18		µV(rms)

AC OPERATING CHARACTERISTICS

V_{DD} = 1.6 V, T_A = 25°C, R_L = 32 Ω

PARAMETER		TEST CONDITIONS	MIN	TYP	MAX	UNIT
P_O	Output power (each channel)	THD≤ 0.1%, f = 1 kHz		7.1		mW
THD+N	Total harmonic distortion + noise	P_O = 6.5 mW, 20 Hz–20 kHz		0.3%		
B_{OM}	Maximum output power BW	G = 0 dB, THD < 0.3%		> 20		kHz
k_{SVR}	Supply ripple rejection	f = 1 kHz		53		dB
SNR	Signal-to-noise ratio	P_O = 7.1 mW		88		dB
V_n	Noise output voltage (no noise-weighting filter)			18		µV(rms)

APPLICATION INFORMATION

GAIN SETTING RESISTORS, R_F, R_I, and R

The voltage gain for the TPA6100A2D is set by resistors R_F and R_I according to Equation 1.

$$\text{Gain} = -\left(\frac{R_F}{R_I}\right) \text{ or Gain (dB)} = 20 \log\left(\frac{R_F}{R_I}\right) \tag{1}$$

Given that the TPA6100A2D is an MOS amplifier, the input impedance is high. Consequently, input leakage currents are not generally a concern, although noise in the circuit increases as the value of R_F increases. In addition, a certain range of R_F values is required for proper start-up operation of the amplifier. Taken together, it is recommended that the effective impedance seen by the inverting node of the amplifier be set between 5 kΩ and 20 kΩ. The effective impedance is calculated in Equation 2.

$$\text{Effective Impedance} = \frac{R_F R_I}{R_F + R_I} \tag{2}$$

As an example, consider an input resistance of 20 kΩ and a feedback resistor of 20 kΩ. The gain of the amplifier would be –1 and the effective impedance at the inverting terminal would be 10 kΩ, which is within the recommended range.

For high-performance applications, metal film resistors are recommended because they tend to have lower noise levels than carbon resistors. For values of R_F above 50 kΩ, the amplifier tends to become unstable due to a pole formed from R_F and the inherent input capacitance of the MOS input structure. For this reason, a small compensation capacitor of approximately 5 pF should be placed in parallel with R_F. In effect, this creates a low-pass filter network with the cutoff frequency defined in Equation 3.

$$f_c = \frac{1}{2\pi R_F C_F} \tag{3}$$

For example, if R_F is 100 kΩ and C_F is 5 pF, then f_c is 318 kHz, which is well outside the audio range.

For maximum signal swing and output power at low supply voltages like 1.6 V to 3.3 V, BYPASS is biased to $V_{DD}/4$. However, to allow the output to be biased at $V_{DD}/2$, a resistor, R, equal to R_F must be placed from the negative input to ground.

INPUT CAPACITOR, C_I

In the typical application, an input capacitor, C_I, is required to allow the amplifier to bias the input signal to the proper dc level for optimum operation. In this case, C_I and R_I form a high-pass filter with the corner frequency determined in Equation 4.

$$f_c = \frac{1}{2\pi R_I C_I} \tag{4}$$

The value of C_I is important to consider, as it directly affects the bass (low-frequency) performance of the circuit. Consider the example where R_I is 20 kΩ and the specification calls for a flat bass response down to 20 Hz. Equation 4 is reconfigured as Equation 5.

$$C_I = \frac{1}{2\pi R_I f_c} \tag{5}$$

In this example, C_I is 0.4 µF, so one would likely choose a value in the range of 0.47 µF to 1 µF. A further consideration for this capacitor is the leakage path from the input source through the input network (R_I, C_I) and the feedback resistor (R_F) to the load. This leakage current creates a dc offset voltage at the input to the amplifier that reduces useful headroom, especially in high-gain applications (>10). For this reason a low-leakage tantalum or ceramic capacitor is the best choice. When polarized capacitors are used, the positive side of the capacitor should face the amplifier input in most applications, as the dc level there is held at $V_{DD}/4$, which is likely higher than the source dc level. It is important to confirm the capacitor polarity in the application.

APPLICATION INFORMATION (continued)

POWER SUPPLY DECOUPLING, C_S

The TPA6100A2D is a high-performance CMOS audio amplifier that requires adequate power supply decoupling to ensure that the output total harmonic distortion (THD) is as low as possible. Power supply decoupling also prevents oscillations for long lead lengths between the amplifier and the speaker. The optimum decoupling is achieved by using two capacitors of different types that target different types of noise on the power supply leads. For higher frequency transients, spikes, or digital hash on the line, a good low equivalent-series-resistance (ESR) ceramic capacitor, typically 0.1 µF, placed as close as possible to the device V_{DD} lead, works best. For filtering lower frequency noise signals, a larger aluminum electrolytic capacitor of 10 µF or greater placed near the power amplifier is recommended.

MIDRAIL BYPASS CAPACITOR, C_B

The midrail bypass capacitor (C_B) serves several important functions. During start-up, C_B determines the rate at which the amplifier starts up. This helps to push the start-up pop noise into the subaudible range (so low it can not be heard). The second function is to reduce noise produced by the power supply caused by coupling into the output drive signal. This noise is from the midrail generation circuit internal to the amplifier. The capacitor is fed from a 55-kΩ source inside the amplifier. To keep the start-up pop as low as possible, the relationship shown in Equation 6 should be maintained.

$$\frac{1}{\left(C_B \times 55\ k\Omega\right)} \leq \frac{1}{\left(C_I R_I\right)} \tag{6}$$

As an example, consider a circuit where C_B is 1 µF, C_I is 1 µF, and R_I is 20 kΩ. Inserting these values into Equation 6 results in: 18.18 ≤ 50 which satisfies the rule. Bypass capacitor (C_B) values of 0.47-µF to 1-µF ceramic or tantalum low-ESR capacitors are recommended for the best THD and noise performance.

OUTPUT COUPLING CAPACITOR, C_C

In the typical single-supply, single-ended (SE) configuration, an output coupling capacitor (C_C) is required to block the dc bias at the output of the amplifier, thus preventing dc currents in the load. As with the input coupling capacitor, the output coupling capacitor and impedance of the load form a high-pass filter governed by Equation 7.

$$f_c = \frac{1}{2\pi R_L C_C} \tag{7}$$

The main disadvantage, from a performance standpoint, is that the typically small load impedances drive the low-frequency corner higher. Large values of C_C are required to pass low frequencies into the load. Consider the example where a C_C of 68 µF is chosen and loads vary from 32 Ω to 47 kΩ. Table 1 summarizes the frequency response characteristics of each configuration.

Table 1. Common Load Impedances vs Low Frequency Output Characteristics in SE Mode

R_L	C_C	LOWEST FREQUENCY
32 Ω	68 µF	73 Hz
10,000 Ω	68 µF	0.23 Hz
47,000 Ω	68 µF	0.05 Hz

As Table 1 indicates, headphone response is adequate and drive into line level inputs (a home stereo for example) is good.

The output coupling capacitor required in single-supply, SE mode also places additional constraints on the selection of other components in the amplifier circuit. With the rules described earlier still valid, add the following relationship:

$$\frac{1}{\left(C_B \times 55\ k\Omega\right)} \leq \frac{1}{\left(C_I R_I\right)} \ll \frac{1}{R_L C_C} \tag{8}$$

USING LOW-ESR CAPACITORS

Low-ESR capacitors are recommended throughout this application. A real capacitor can be modeled simply as a resistor in series with an ideal capacitor. The voltage drop across this resistor minimizes the beneficial effects of the capacitor in the circuit. The lower the equivalent value of this resistance, the more the real capacitor behaves like an ideal capacitor.

3.3-V VERSUS 1.6-V OPERATION

The TPA6100A2D was designed for operation over a supply range of 1.6 V to 3.6 V. There are no special considerations for 1.6-V versus 3.3-V operation as far as supply bypassing, gain setting, or stability. The most important consideration is that of output power. Each amplifier can produce a maxium output voltage swing within a few hundred millivolts of the rails with a 10-kΩ load. However, this voltage swing decreases as the load resistance decreases and the $r_{DS(on)}$ as the output stage transistors becomes more significant. For example, for a 32-Ω load, the maximum peak output voltage with V_{DD} = 1.6 V is approximately 0.7 V with no clipping distortion. This reduced voltage swing effectively reduces the maximum undistorted output power.

PACKAGING INFORMATION

Orderable Device	Status [1]	Package Type	Package Drawing	Pins	Package Qty	Eco Plan [2]	Lead/ Ball Finish	MSL Peak Temp [3]	Samples (Requires Login)
TPA6100A2D	ACTIVE	SOIC	D	8	75	Green (RoHS & no Sb/Br)	CU NIPDAU	Level-1-260C-UNLIM	
TPA6100A2DG4	ACTIVE	SOIC	D	8	75	Green (RoHS & no Sb/Br)	CU NIPDAU	Level-1-260C-UNLIM	
TPA6100A2DGK	ACTIVE	VSSOP	DGK	8	80	Green (RoHS & no Sb/Br)	CU NIPDAU	Level-1-260C-UNLIM	
TPA6100A2DGKG4	ACTIVE	VSSOP	DGK	8	80	Green (RoHS & no Sb/Br)	CU NIPDAU	Level-1-260C-UNLIM	
TPA6100A2DGKR	ACTIVE	VSSOP	DGK	8	2500	Green (RoHS & no Sb/Br)	CU NIPDAU	Level-1-260C-UNLIM	
TPA6100A2DGKRG4	ACTIVE	VSSOP	DGK	8	2500	Green (RoHS & no Sb/Br)	CU NIPDAU	Level-1-260C-UNLIM	
TPA6100A2DR	ACTIVE	SOIC	D	8	2500	Green (RoHS & no Sb/Br)	CU NIPDAU	Level-1-260C-UNLIM	
TPA6100A2DRG4	ACTIVE	SOIC	D	8	2500	Green (RoHS & no Sb/Br)	CU NIPDAU	Level-1-260C-UNLIM	

[1] The marketing status values are defined as follows:
ACTIVE: Product device recommended for new designs.
LIFEBUY: TI has announced that the device will be discontinued, and a lifetime-buy period is in effect.
NRND: Not recommended for new designs. Device is in production to support existing customers, but TI does not recommend using this part in a new design.
PREVIEW: Device has been announced but is not in production. Samples may or may not be available.
OBSOLETE: TI has discontinued the production of the device.

[2] Eco Plan - The planned eco-friendly classification: Pb-Free (RoHS), Pb-Free (RoHS Exempt), or Green (RoHS & no Sb/Br) - please check http://www.ti.com/productcontent for the latest availability information and additional product content details.
TBD: The Pb-Free/Green conversion plan has not been defined.
Pb-Free (RoHS): TI's terms "Lead-Free" or "Pb-Free" mean semiconductor products that are compatible with the current RoHS requirements for all 6 substances, including the requirement that lead not exceed 0.1% by weight in homogeneous materials. Where designed to be soldered at high temperatures, TI Pb-Free products are suitable for use in specified lead-free processes.
Pb-Free (RoHS Exempt): This component has a RoHS exemption for either 1) lead-based flip-chip solder bumps used between the die and package, or 2) lead-based die adhesive used between the die and leadframe. The component is otherwise considered Pb-Free (RoHS compatible) as defined above.
Green (RoHS & no Sb/Br): TI defines "Green" to mean Pb-Free (RoHS compatible), and free of Bromine (Br) and Antimony (Sb) based flame retardants (Br or Sb do not exceed 0.1% by weight in homogeneous material)

[3] MSL, Peak Temp. -- The Moisture Sensitivity Level rating according to the JEDEC industry standard classifications, and peak solder temperature.

Important Information and Disclaimer: The information provided on this page represents TI's knowledge and belief as of the date that it is provided. TI bases its knowledge and belief on information provided by third parties, and makes no representation or warranty as to the accuracy of such information. Efforts are underway to better integrate information from third parties. TI has taken and continues to take reasonable steps to provide representative and accurate information but may not have conducted destructive testing or chemical analysis on incoming materials and chemicals. TI and TI suppliers consider certain information to be proprietary, and thus CAS numbers and other limited information may not be available for release.

In no event shall TI's liability arising out of such information exceed the total purchase price of the TI part(s) at issue in this document sold by TI to Customer on an annual basis.

TAPE AND REEL INFORMATION

REEL DIMENSIONS

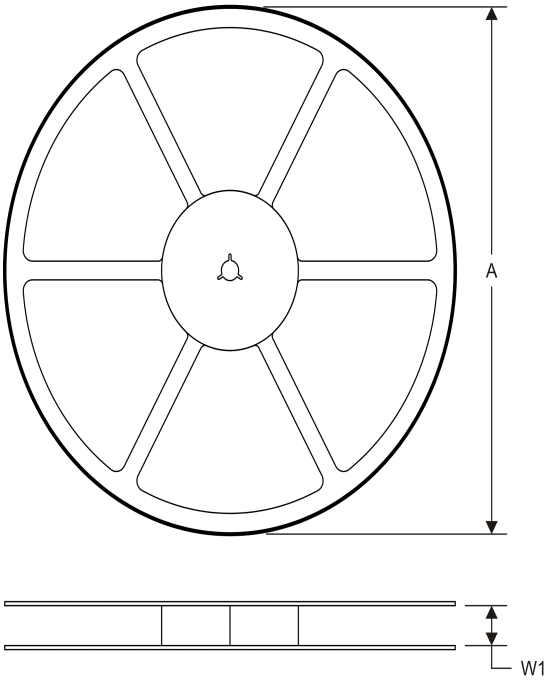

TAPE DIMENSIONS

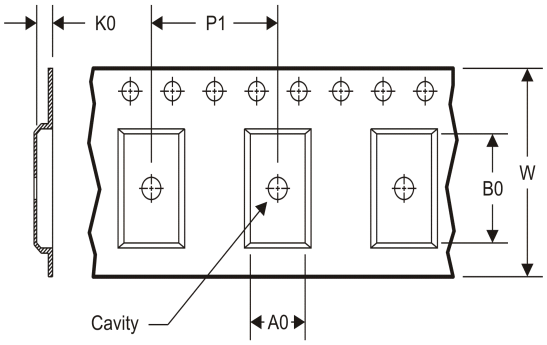

A0	Dimension designed to accommodate the component width
B0	Dimension designed to accommodate the component length
K0	Dimension designed to accommodate the component thickness
W	Overall width of the carrier tape
P1	Pitch between successive cavity centers

TAPE AND REEL INFORMATION

*All dimensions are nominal

Device	Package Type	Package Drawing	Pins	SPQ	Reel Diameter (mm)	Reel Width W1 (mm)	A0 (mm)	B0 (mm)	K0 (mm)	P1 (mm)	W (mm)	Pin1 Quadrant
TPA6100A2DGKR	VSSOP	DGK	8	2500	330.0	12.4	5.3	3.4	1.4	8.0	12.0	Q1
TPA6100A2DR	SOIC	D	8	2500	330.0	12.4	6.4	5.2	2.1	8.0	12.0	Q1

TAPE AND REEL BOX DIMENSIONS

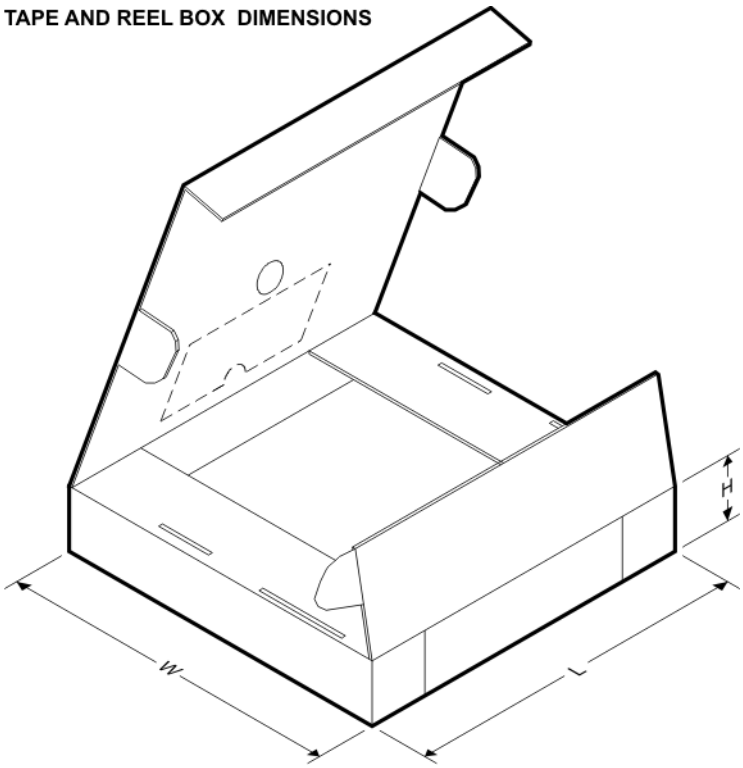

*All dimensions are nominal

Device	Package Type	Package Drawing	Pins	SPQ	Length (mm)	Width (mm)	Height (mm)
TPA6100A2DGKR	VSSOP	DGK	8	2500	358.0	335.0	35.0
TPA6100A2DR	SOIC	D	8	2500	367.0	367.0	35.0

DGK (S–PDSO–G8) PLASTIC SMALL–OUTLINE PACKAGE

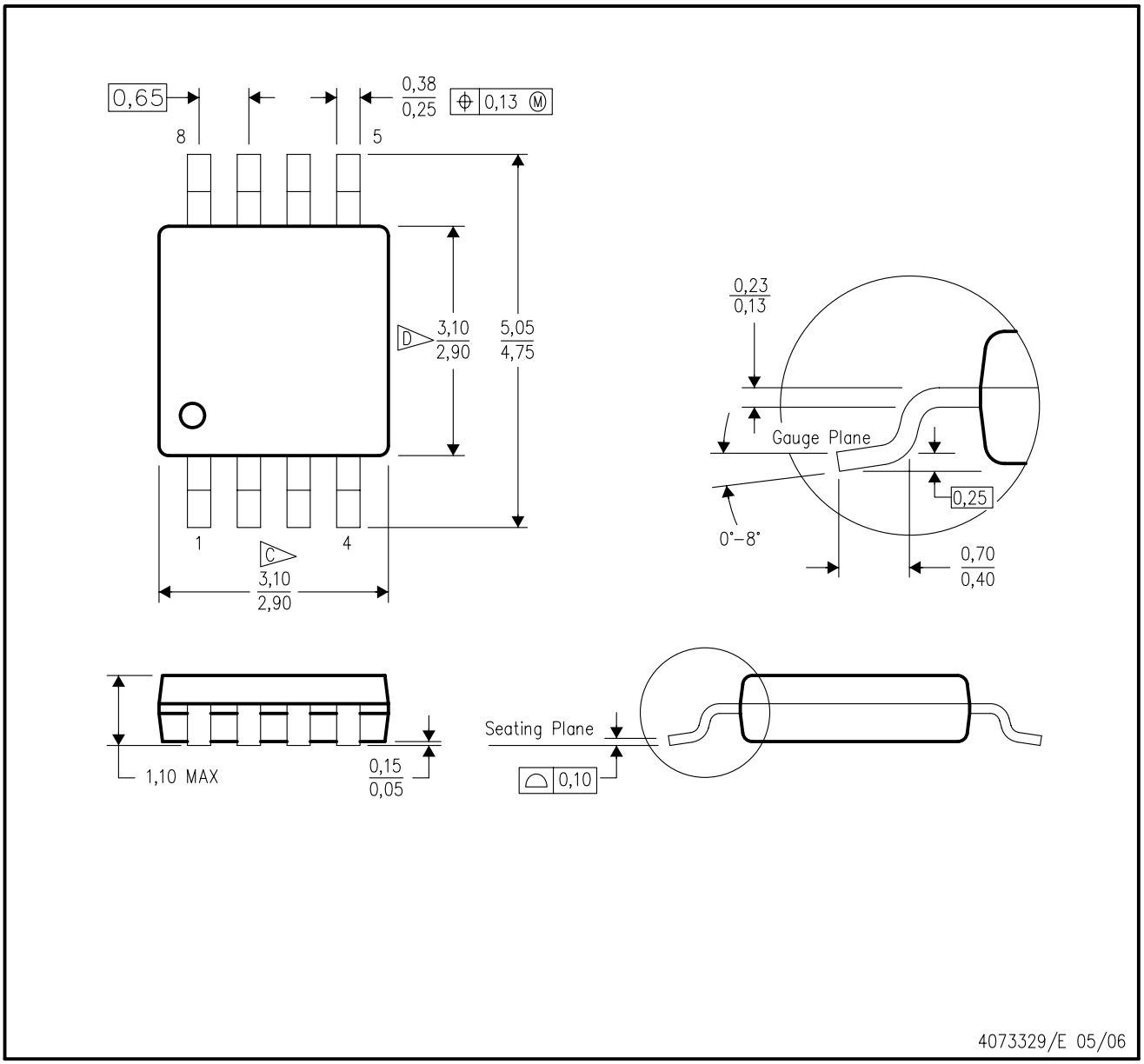

NOTES:
A. All linear dimensions are in millimeters.
B. This drawing is subject to change without notice.
C. Body length does not include mold flash, protrusions, or gate burrs. Mold flash, protrusions, or gate burrs shall not exceed 0.15 per end.
D. Body width does not include interlead flash. Interlead flash shall not exceed 0.50 per side.
E. Falls within JEDEC MO–187 variation AA, except interlead flash.

D (R–PDSO–G8) PLASTIC SMALL OUTLINE

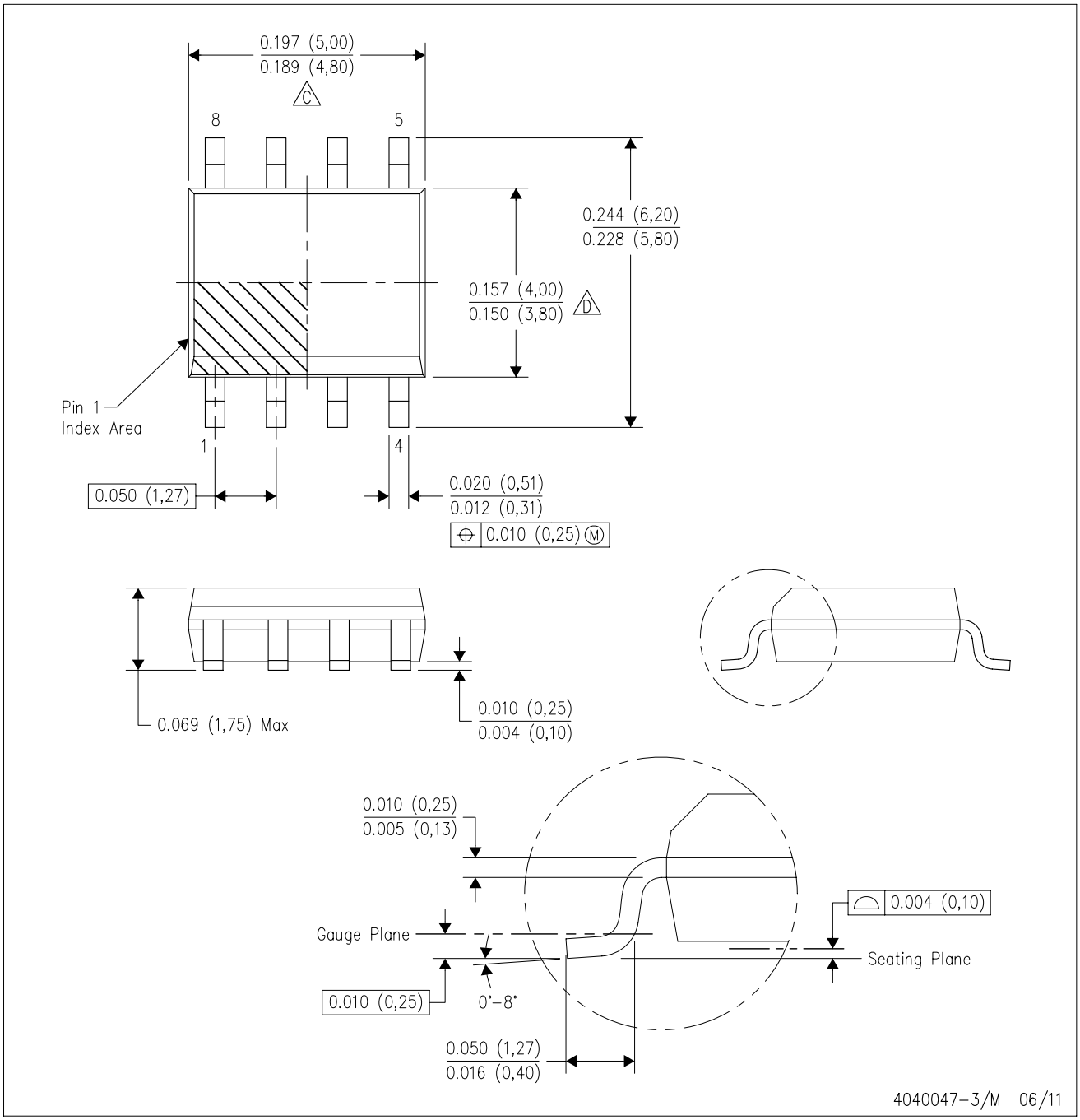

NOTES:
A. All linear dimensions are in inches (millimeters).
B. This drawing is subject to change without notice.
C. Body length does not include mold flash, protrusions, or gate burrs. Mold flash, protrusions, or gate burrs shall not exceed 0.006 (0,15) each side.
D. Body width does not include interlead flash. Interlead flash shall not exceed 0.017 (0,43) each side.
E. Reference JEDEC MS–012 variation AA.

D (R–PDSO–G8) PLASTIC SMALL OUTLINE

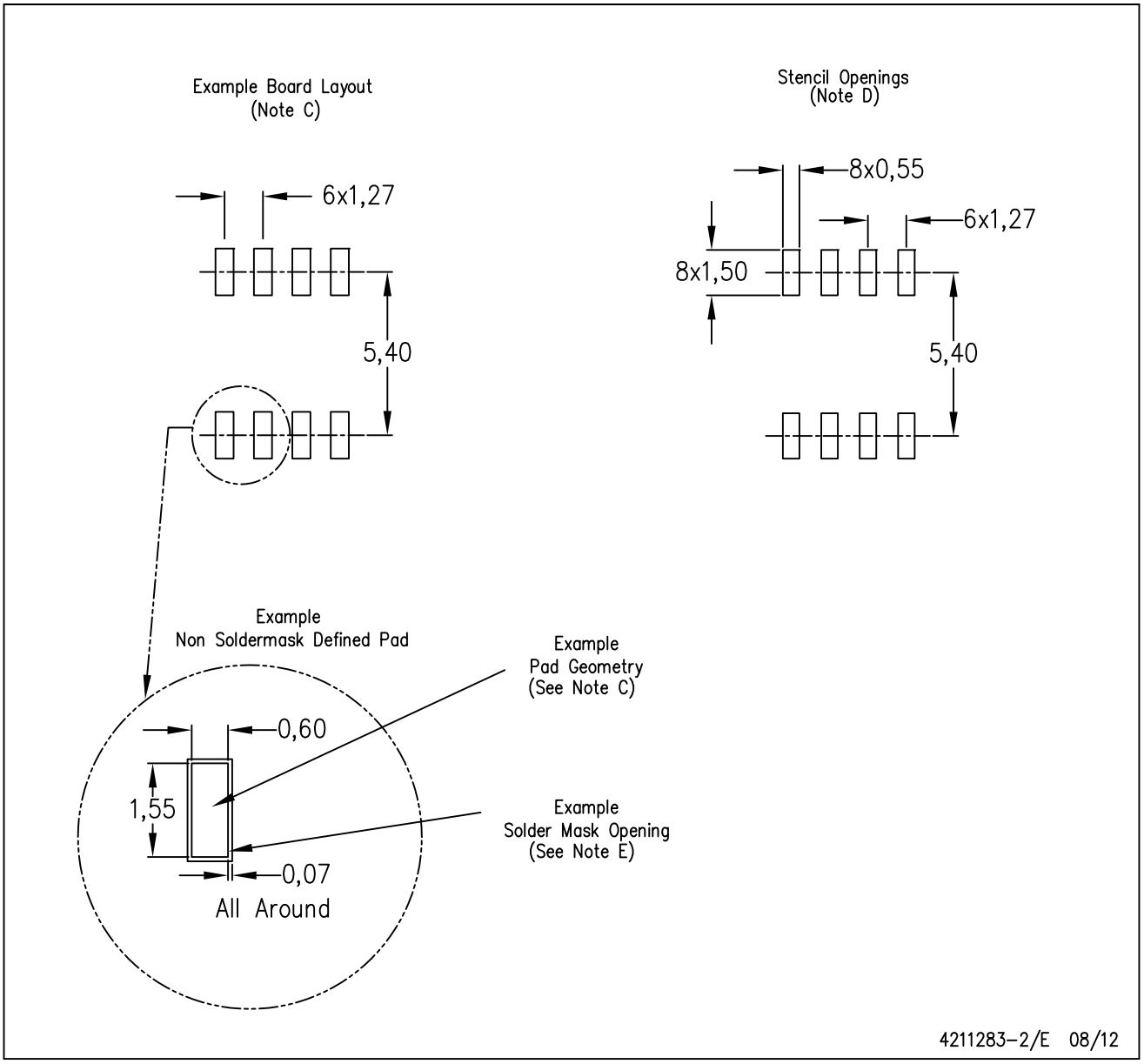

NOTES:
A. All linear dimensions are in millimeters.
B. This drawing is subject to change without notice.
C. Publication IPC–7351 is recommended for alternate designs.
D. Laser cutting apertures with trapezoidal walls and also rounding corners will offer better paste release. Customers should contact their board assembly site for stencil design recommendations. Refer to IPC–7525 for other stencil recommendations.
E. Customers should contact their board fabrication site for solder mask tolerances between and around signal pads.

IMPORTANT NOTICE

Texas Instruments Incorporated and its subsidiaries (TI) reserve the right to make corrections, enhancements, improvements and other changes to its semiconductor products and services per JESD46, latest issue, and to discontinue any product or service per JESD48, latest issue. Buyers should obtain the latest relevant information before placing orders and should verify that such information is current and complete. All semiconductor products (also referred to herein as “components”) are sold subject to TI’s terms and conditions of sale supplied at the time of order acknowledgment.

TI warrants performance of its components to the specifications applicable at the time of sale, in accordance with the warranty in TI’s terms and conditions of sale of semiconductor products. Testing and other quality control techniques are used to the extent TI deems necessary to support this warranty. Except where mandated by applicable law, testing of all parameters of each component is not necessarily performed.

TI assumes no liability for applications assistance or the design of Buyers’ products. Buyers are responsible for their products and applications using TI components. To minimize the risks associated with Buyers’ products and applications, Buyers should provide adequate design and operating safeguards.

TI does not warrant or represent that any license, either express or implied, is granted under any patent right, copyright, mask work right, or other intellectual property right relating to any combination, machine, or process in which TI components or services are used. Information published by TI regarding third-party products or services does not constitute a license to use such products or services or a warranty or endorsement thereof. Use of such information may require a license from a third party under the patents or other intellectual property of the third party, or a license from TI under the patents or other intellectual property of TI.

Reproduction of significant portions of TI information in TI data books or data sheets is permissible only if reproduction is without alteration and is accompanied by all associated warranties, conditions, limitations, and notices. TI is not responsible or liable for such altered documentation. Information of third parties may be subject to additional restrictions.

Resale of TI components or services with statements different from or beyond the parameters stated by TI for that component or service voids all express and any implied warranties for the associated TI component or service and is an unfair and deceptive business practice. TI is not responsible or liable for any such statements.

Buyer acknowledges and agrees that it is solely responsible for compliance with all legal, regulatory and safety-related requirements concerning its products, and any use of TI components in its applications, notwithstanding any applications-related information or support that may be provided by TI. Buyer represents and agrees that it has all the necessary expertise to create and implement safeguards which anticipate dangerous consequences of failures, monitor failures and their consequences, lessen the likelihood of failures that might cause harm and take appropriate remedial actions. Buyer will fully indemnify TI and its representatives against any damages arising out of the use of any TI components in safety-critical applications.

In some cases, TI components may be promoted specifically to facilitate safety-related applications. With such components, TI’s goal is to help enable customers to design and create their own end-product solutions that meet applicable functional safety standards and requirements. Nonetheless, such components are subject to these terms.

No TI components are authorized for use in FDA Class III (or similar life-critical medical equipment) unless authorized officers of the parties have executed a special agreement specifically governing such use.

Only those TI components which TI has specifically designated as military grade or “enhanced plastic” are designed and intended for use in military/aerospace applications or environments. Buyer acknowledges and agrees that any military or aerospace use of TI components which have ***not*** been so designated is solely at the Buyer's risk, and that Buyer is solely responsible for compliance with all legal and regulatory requirements in connection with such use.

TI has specifically designated certain components which meet ISO/TS16949 requirements, mainly for automotive use. Components which have not been so designated are neither designed nor intended for automotive use; and TI will not be responsible for any failure of such components to meet such requirements.

Products		**Applications**	
Audio	www.ti.com/audio	Automotive and Transportation	www.ti.com/automotive
Amplifiers	amplifier.ti.com	Communications and Telecom	www.ti.com/communications
Data Converters	dataconverter.ti.com	Computers and Peripherals	www.ti.com/computers
DLP® Products	www.dlp.com	Consumer Electronics	www.ti.com/consumer-apps
DSP	dsp.ti.com	Energy and Lighting	www.ti.com/energy
Clocks and Timers	www.ti.com/clocks	Industrial	www.ti.com/industrial
Interface	interface.ti.com	Medical	www.ti.com/medical
Logic	logic.ti.com	Security	www.ti.com/security
Power Mgmt	power.ti.com	Space, Avionics and Defense	www.ti.com/space-avionics-defense
Microcontrollers	microcontroller.ti.com	Video and Imaging	www.ti.com/video
RFID	www.ti-rfid.com		
OMAP Applications Processors	www.ti.com/omap	**TI E2E Community**	e2e.ti.com
Wireless Connectivity	www.ti.com/wirelessconnectivity		

Mailing Address: Texas Instruments, Post Office Box 655303, Dallas, Texas 75265
Copyright © 2012, Texas Instruments Incorporated