20-W Stereo Digital-Audio Power Amplifier With EQ and DRC

FEATURES

- **Audio Input/Output**
  - **20 W Into an 8-Ω Load From an 18-V Supply**
  - **Two Serial Audio Inputs (Four Audio Channels)**
  - **Supports Multiple Output Configurations:**
    - **2-Ch Bridged Outputs (20 W × 2)**
    - **4-Ch Single-Ended Outputs (10 W × 4)**
    - **2-Ch Single-Ended + 1-Ch Bridged (2.1) (10 W × 2 + 20 W)**
- **Closed-Loop Power-Stage Architecture**
  - **Improved PSRR Reduces Power Supply Performance Requirements**
  - **Higher Damping Factor Provides for Tighter, More Accurate Sound With Improved Bass Response**
  - **Constant Output Power Over Variation in Supply**
- **Wide PVCC Range From (10 V to 26 V)**
  - **No Separate Supply Required for Gate Drive**
- **Supports 32-kHz–192-kHz Sample Rates (LJ/RJ/I^2S)**
- **Headphone PWM Outputs**
- **Subwoofer PWM Outputs**
- **AM Interference Avoidance Support**
- **Audio/PWM Processing**
  - **Independent Channel Volume Controls With 24-dB to –100-dB Range—Soft Mute (50% Duty Cycle)**
  - **Programmable Dynamic Range Control**
  - **16 Programmable Biquads for Speaker Equalization**
  - **Adaptive Biquad Coefficients for EQ and DRC Filters**
  - **Programmable Input and Output Mixers**
  - **Loudness Compensation for Subwoofer**
  - **Automatic Sample-Rate Detection and Coefficient Banking**
  - **3D Support**
  - **Pseudo-Bass Support**
- **General Features**
  - **Serial Control Interface Operational Without MCLK**
  - **Factory-Trimmed Internal Oscillator Avoids the Need for External Crystal**
  - **Surface Mount, 64-Terminal, 10-mm × 10-mm HTQFP Package**
  - **Thermal and Short-Circuit Protection**

DESCRIPTION

The TAS5716 is a 20-W, efficient, digital-audio power amplifier for driving stereo bridged-tied speakers. Two serial data inputs allow processing of up to four discrete audio channels and seamless integration to most digital audio processors and MPEG decoders, accepting a wide range of input data and clock rates. A fully programmable data path allows these channels to be routed to the internal speaker drivers or output via the subwoofer or headphone PWM outputs.

The TAS5716 is a slave-only device receiving all clocks from external sources. The TAS5716 operates at a 384-kHz switching rate for 32-, 48-, 96-, and 192-kHz data, and at a 352.8 kHz switching rate for 44.1-, 88.2-, and 176.4-kHz data. The 8× oversampling combined with the fourth-order noise shaper provides a flat noise floor and excellent dynamic range from 20 Hz to 20 kHz.

Please be aware that an important notice concerning availability, standard warranty, and use in critical applications of Texas Instruments semiconductor products and disclaimers thereto appears at the end of this data sheet.

PurePath Digital is a trademark of Texas Instruments.
All other trademarks are the property of their respective owners.

PRODUCTION DATA information is current as of publication date. Products conform to specifications per the terms of the Texas Instruments standard warranty. Production processing does not necessarily include testing of all parameters.

Copyright © 2009, Texas Instruments Incorporated

These devices have limited built-in ESD protection. The leads should be shorted together or the device placed in conductive foam during storage or handling to prevent electrostatic damage to the MOS gates.

SIMPLIFIED APPLICATION DIAGRAMS

Bridge-Tied Load (BTL) Mode

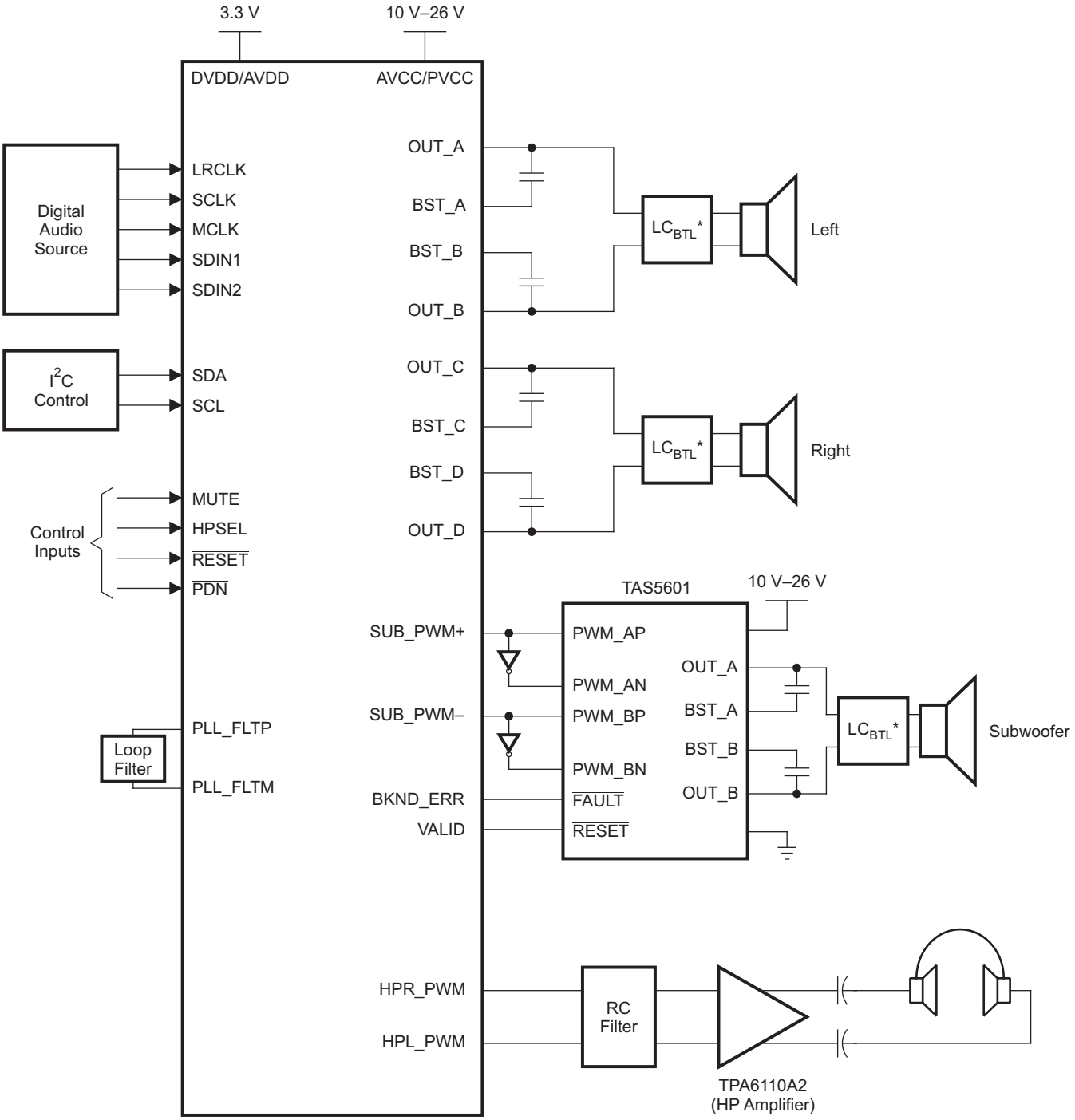

* Refer to TI Application Note (SLOA119) on LC filter design for BTL (AD/BD mode) configuration.

B0264-02

Copyright © 2009, Texas Instruments Incorporated

Single-Ended (SE) 2.1 Mode

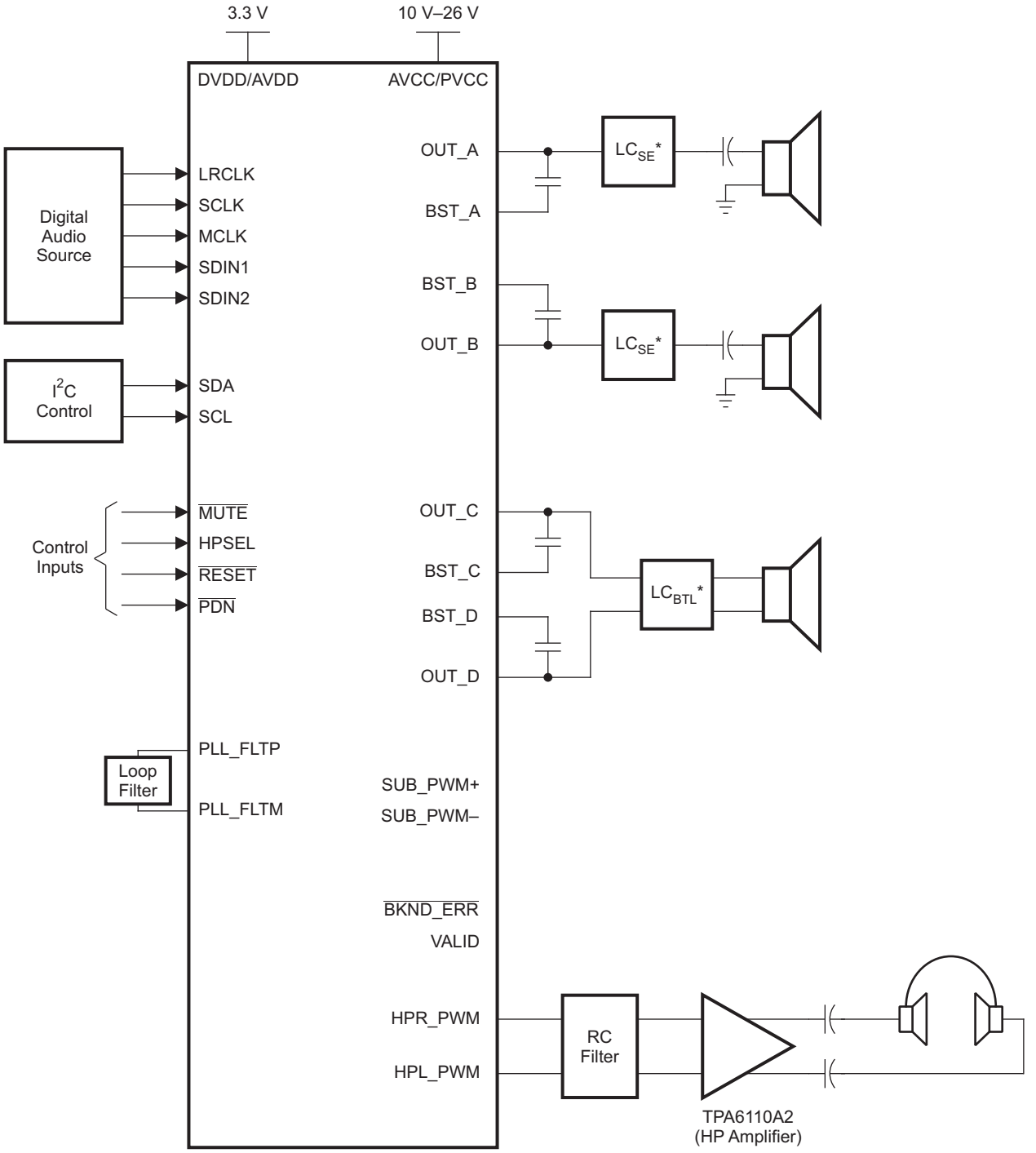

* Refer to TI Application Note (SLOA119) on LC filter design for SE or BTL configuration.

B0264-05

Single-Ended (SE) 4.0 Mode

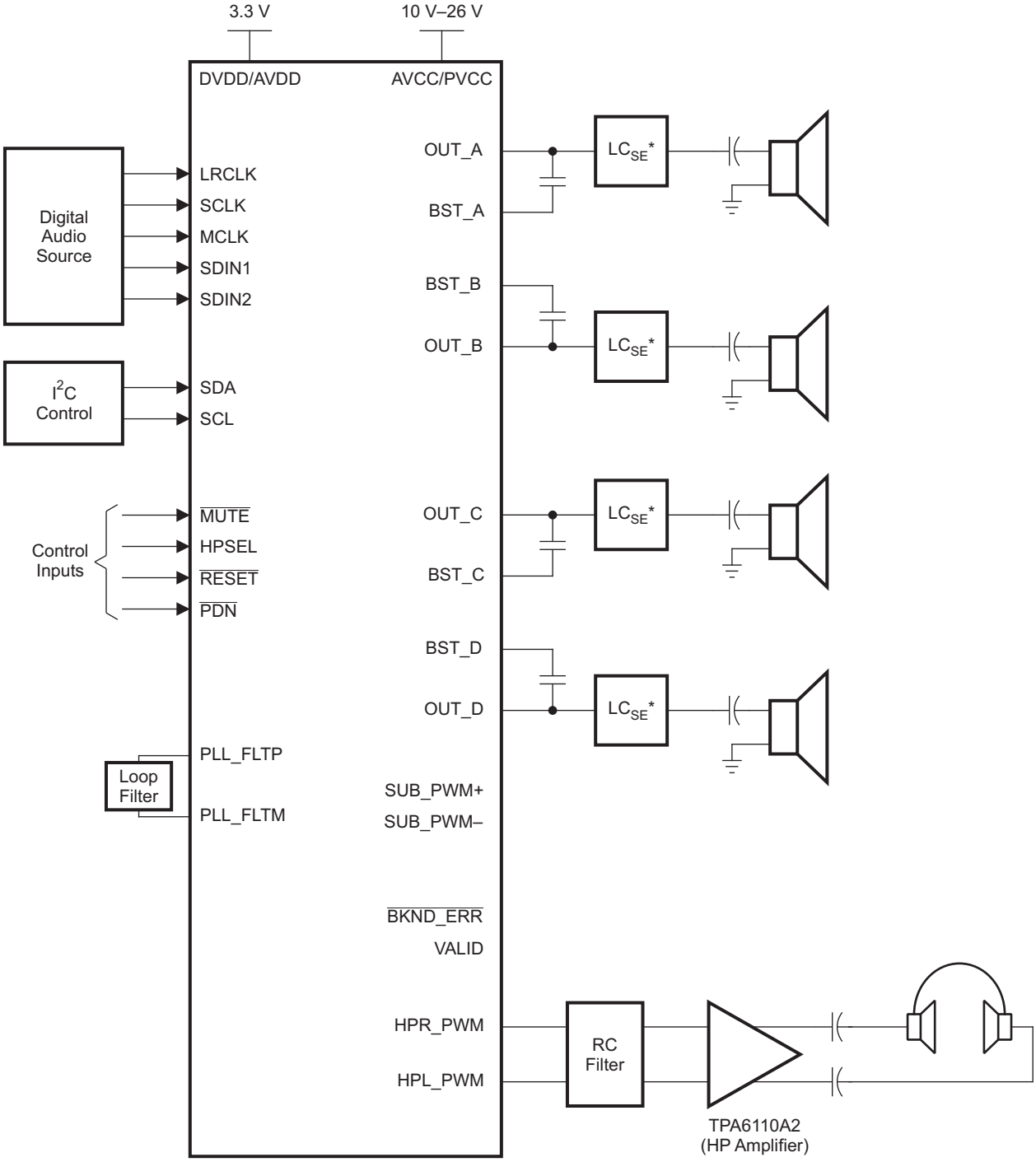

* Refer to TI Application Note (SLOA119) on LC filter design for SE configuration.

B0264-04

Copyright © 2009, Texas Instruments Incorporated

FUNCTIONAL VIEW

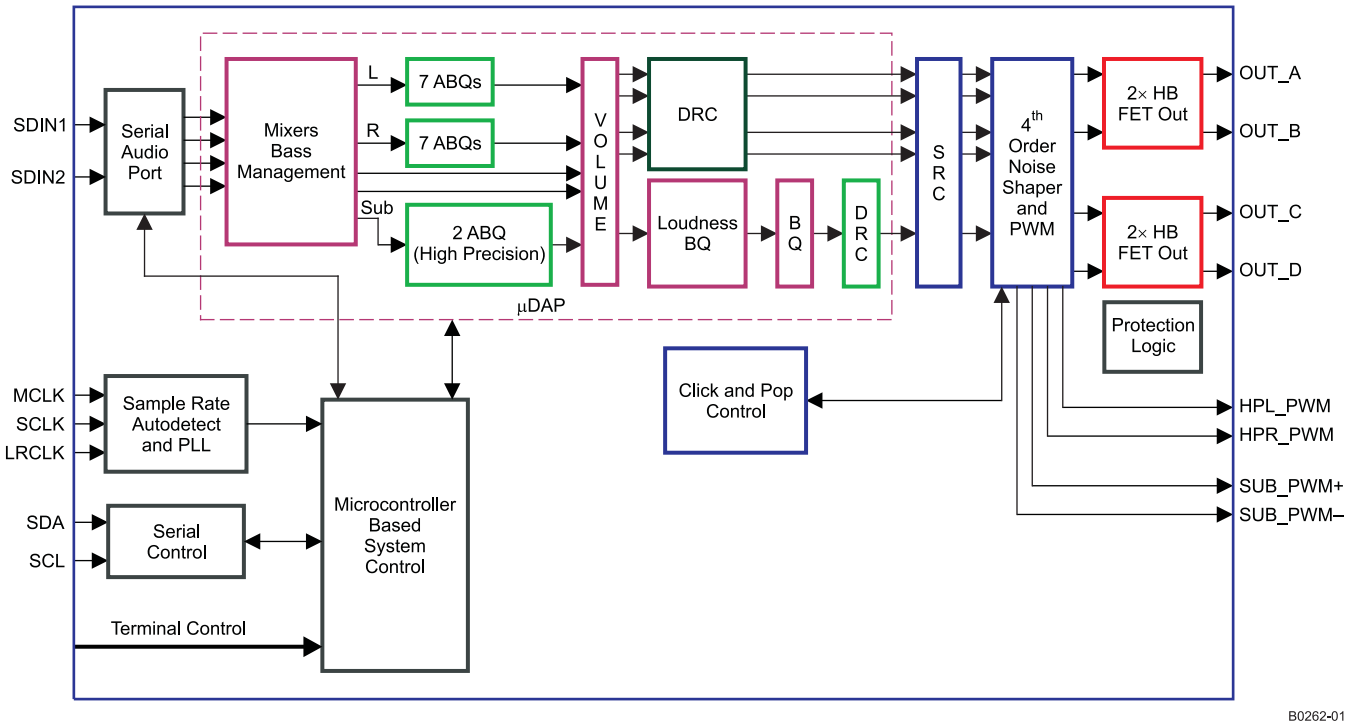

DAP Process Flow

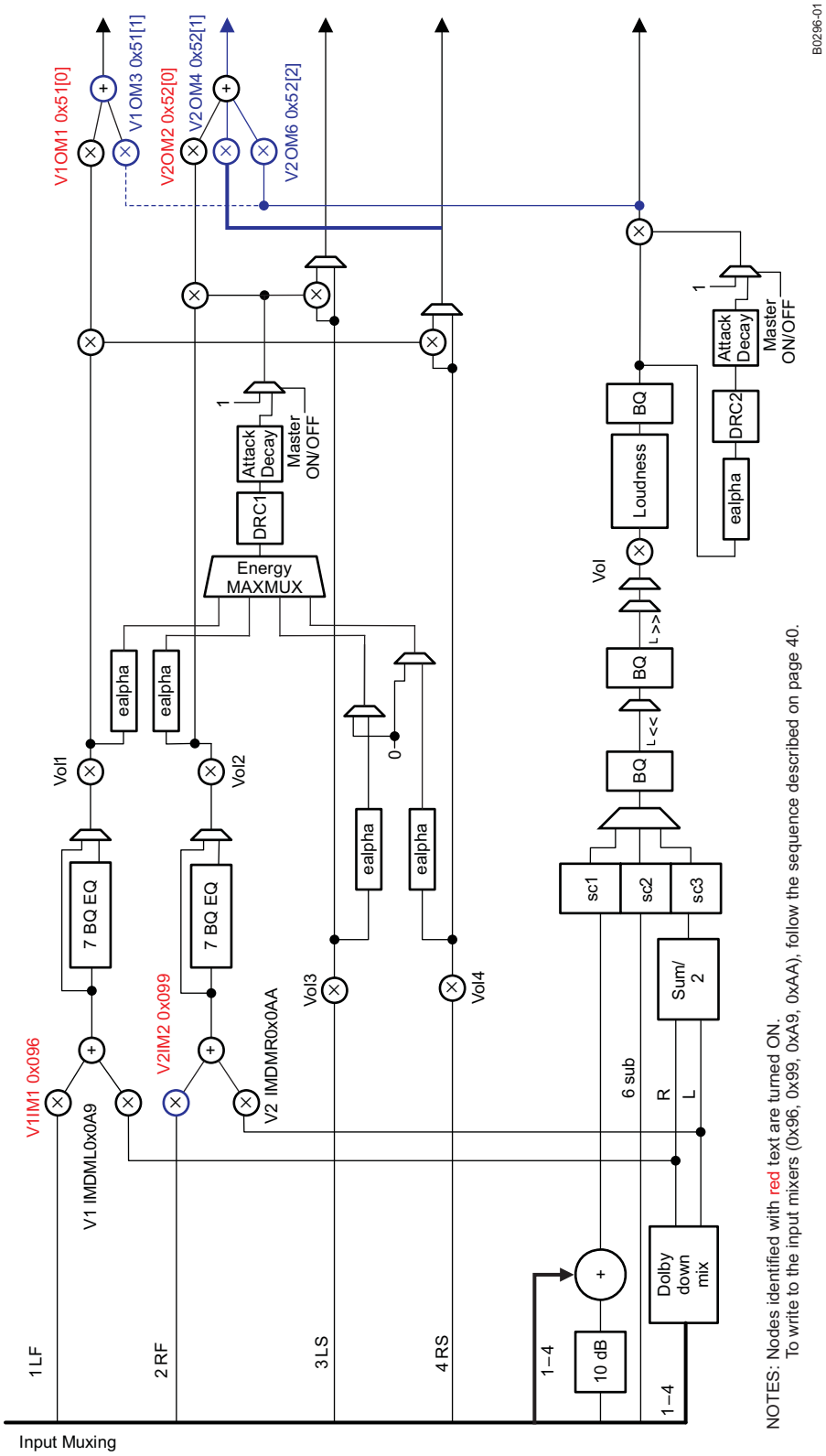

Copyright © 2009, Texas Instruments Incorporated

64-PIN, HTQFP PACKAGE

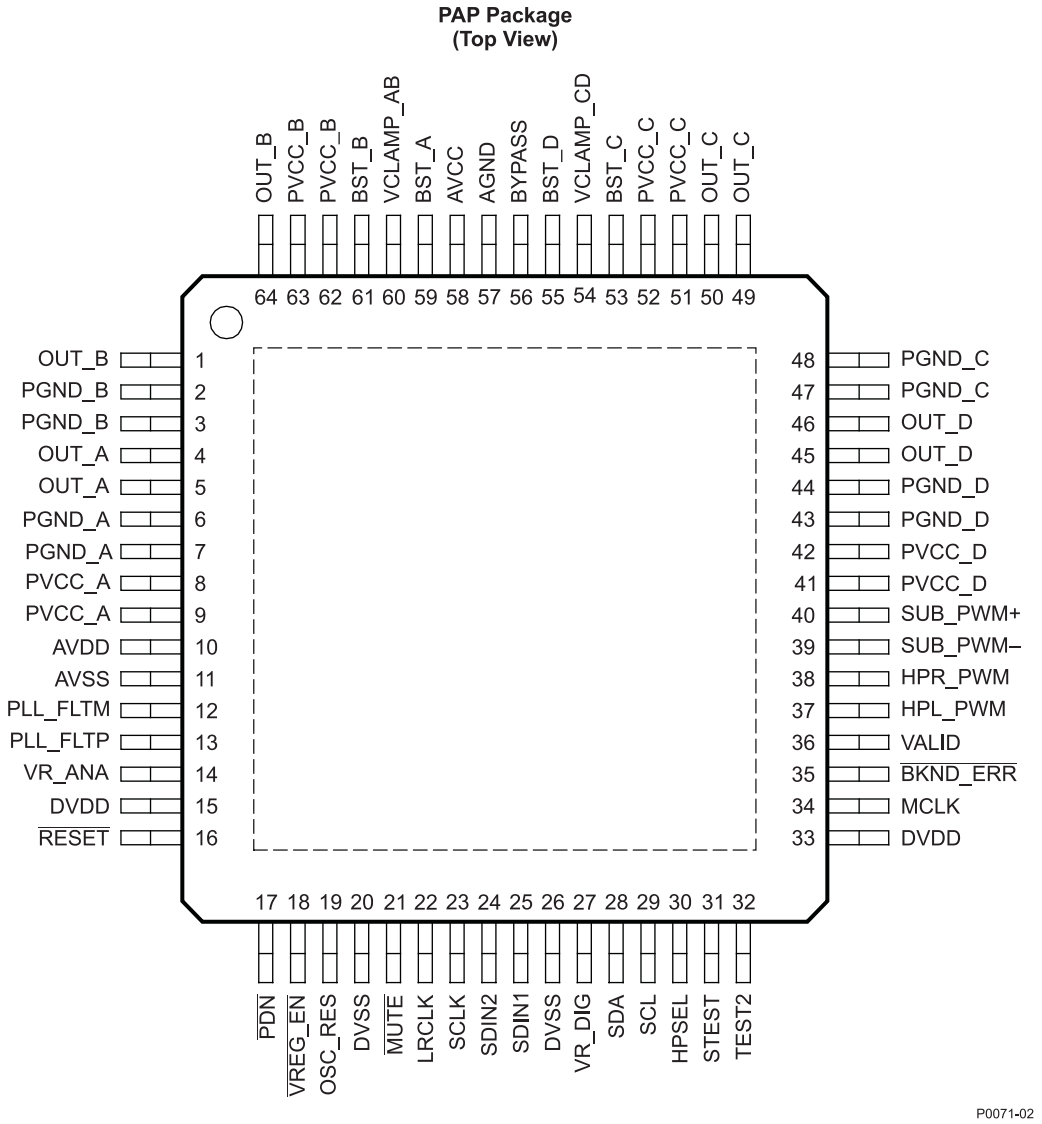

PIN FUNCTIONS

PIN		TYPE (1)	5-V TOLERANT	TERMINATION (2)	DESCRIPTION
NAME	NO.				
AGND	57	P			Analog ground for power stage
AVCC	58	P			Analog power supply for power stage. Connect externally to same potential as PVCC.
AVDD	10	P			3.3-V analog power supply
AVSS	11	P			Analog 3.3-V supply ground
$\overline{\text{BKND_ERR}}$	35	DI		Pullup	Active-low. A back-end error sequence is generated by applying logic LOW to this terminal. This terminal is connected to an external power stage. If no external power stage is used, connect this terminal directly to DVDD.

(1) TYPE: A = analog; D = 3.3-V digital; P = power/ground/decoupling; I = input; O = output
(2) All pullups are 20-µA weak pullups and all pulldowns are 20-µA weak pulldowns. The pullups and pulldowns are included to assure proper input logic levels if the terminals are left unconnected (pullups → logic 1 input; pulldowns → logic 0 input). Devices that drive inputs with pullups must be able to sink 20 µA while maintaining a logic-0 drive level. Devices that drive inputs with pulldowns must be able to source 20 µA while maintaining a logic-1 drive level.

Copyright © 2009, Texas Instruments Incorporated

PIN FUNCTIONS (continued)

PIN		TYPE (1)	5-V TOLERANT	TERMINATION (2)	DESCRIPTION
NAME	NO.				
BST_A	59	P			High-side bootstrap supply for half-bridge A
BST_B	61	P			High-side bootstrap supply for half-bridge B
BST_C	53	P			High-side bootstrap supply for half-bridge C
BST_D	55	P			High-side bootstrap supply for half-bridge D
BYPASS	56	O			Nominally equal to V_{CC}/8. Internal reference voltage for analog cells
DVDD	15, 33	P			3.3-V digital power supply
DVSS	20, 26	P			Digital ground
HPL_PWM	37	DO			Headphone left-channel PWM output
HPR_PWM	38	DO			Headphone right-channel PWM output
HPSEL	30	DI	5-V		Headphone select, active high. When a logic HIGH is applied, device enters headphone mode and speakers are hard-muted. When a logic LOW is applied, device is in speaker mode and headphone outputs become line outputs or are disabled.
LRCLK	22	DI	5-V		Input serial audio data left/right clock (sampling rate clock)
MCLK	34	DI	5-V		MCLK is the clock master input. The input frequency of this clock can range from 2.822 MHz to 49 MHz.
$\overline{\text{MUTE}}$	21	DI	5-V	Pullup	Performs a soft mute of outputs, active-low. A logic low on this terminal sets the outputs equal to 50% duty cycle. A logic high on this terminal allows normal operation. The mute control provides a noiseless volume ramp to silence. Releasing mute provides a noiseless ramp to previous volume.
OSC_RES	19	AO			Oscillator trim resistor. Connect an 18.2-kΩ resistor to GND.
OUT_A	4, 5	O			Output, half-bridge A
OUT_B	1, 64	O			Output, half-bridge B
OUT_C	49, 50	O			Output, half-bridge C
OUT_D	45, 46	O			Output, half-bridge D
$\overline{\text{PDN}}$	17	DI	5-V	Pullup	Power down, active-low. $\overline{\text{PDN}}$ powers down all logic, stops all clocks, and outputs stops switching. When $\overline{\text{PDN}}$ is released, the device powers up all logic, starts all clocks, and performs a soft start that returns to the previous configuration determined by register settings.
PGND_A	6, 7	P			Power ground for half-bridge A
PGND_B	2, 3	P			Power ground for half-bridge B
PGND_C	47, 48	P			Power ground for half-bridge C
PGND_D	43, 44	P			Power ground for half-bridge D
PLL_FLTM	12	AO			PLL negative input
PLL_FLTP	13	AI			PLL positive input
PVCC_A	8, 9	P			Power supply input for half-bridge output A
PVCC_B	62, 63	P			Power supply input for half-bridge output B
PVCC_C	51, 52	P			Power supply input for half-bridge output C
PVCC_D	41, 42	P			Power supply input for half-bridge output D

Copyright © 2009, Texas Instruments Incorporated

PIN FUNCTIONS (continued)

PIN		TYPE (1)	5-V TOLERANT	TERMINATION (2)	DESCRIPTION
NAME	NO.				
$\overline{\text{RESET}}$	16	DI	5-V	Pullup	Reset, active-low. A system reset is generated by applying a logic low to this terminal. $\overline{\text{RESET}}$ is an asynchronous control signal that restores the DAP to its default conditions, sets the VALID outputs low, and places the PWM in the hard-mute state (stops switching). Master volume is immediately set to full attenuation. Upon the release of $\overline{\text{RESET}}$, if $\overline{\text{PDN}}$ is high, the system performs a 4- to 5-ms device initialization and sets the volume at mute.
SCL	29	DI	5-V		I^2C serial-control clock input
SCLK	23	DI	5-V		Serial audio data clock (shift clock). SCLK is the serial audio-port input data-bit clock.
SDA	28	DIO	5-V		I^2C serial-control data-interface input/output
SDIN1	25	DI	5-V		Serial audio data-1 input is one of the serial data input ports. SDIN1 supports three discrete (stereo) data formats.
SDIN2	24	DI	5-V		Serial audio data-2 input is one of the serial data input ports. SDIN2 supports three discrete (stereo) data formats.
STEST	31	DI			Test terminal. Connect directly to GND.
SUB_PWM–	39	DO			Subwoofer negative PWM output
SUB_PWM+	40	DO			Subwoofer positive PWM output
TEST2	32	DI			Test terminal. Connect directly to DVDD.
VALID	36	DO			Output indicating validity of ALL PWM channels, active-high. This terminal is connected to an external power stage. If no external power stage is used, leave this terminal floating.
VCLAMP_AB	60	P			Internally generated voltage supply for channels A and B gate drive. Not to be used as a supply or connected to any component other than the decoupling capacitor
VCLAMP_CD	54	P			Internally generated voltage supply for channels C and D gate drive. Not to be used as a supply or connected to any component other than the decoupling capacitor
VR_ANA	14	P			Internally regulated 1.8-V analog supply voltage. This terminal must not be used to power external devices.
VR_DIG	27	P			Internally regulated 1.8-V digital supply voltage. This terminal must not be used to power external devices.
$\overline{\text{VREG_EN}}$	18	DI		Pulldown	Voltage regulator enable. Connect directly to GND.

ABSOLUTE MAXIMUM RATINGS

over operating free-air temperature range (unless otherwise noted) (1)

		VALUE	UNIT
Supply voltage	DVDD, AVDD	–0.3 to 3.6	V
	PVCC	–0.3 to 30	V
Input voltage	3.3-V digital input	–0.5 to DVDD + 0.5	V
	5-V tolerant(2) digital input	–0.5 to 6	V
Input clamp current, I_{IK} (V_I < 0 or V_I > 1.8 V		±20	mA
Output clamp current, I_{OK} (V_O < 0 or V_O > 1.8 V		±20	mA
Operating free-air temperature		0 to 85	°C
Operating junction temperature range		0 to 150	°C
Storage temperature range, T_{stg}		–40 to 125	°C

(1) Stresses beyond those listed under *absolute ratings* may cause permanent damage to the device. These are stress ratings only and functional operation of the device at these or any other conditions beyond those indicated under *recommended operation conditions* are not implied. Exposure to absolute-maximum conditions for extended periods may affect device reliability.
(2) 5-V tolerant inputs are $\overline{\text{PDN}}$, $\overline{\text{RESET}}$, $\overline{\text{MUTE}}$, SCLK, LRCLK, MCLK, SDIN1, SDIN2, SDA, SCL, and HPSEL.

Copyright © 2009, Texas Instruments Incorporated

DISSIPATION RATINGS

PACKAGE(1)	DERATING FACTOR	T_A = 25°C POWER RATING	T_A = 45°C POWER RATING	T_A = 70°C POWER RATING
10-mm × 10-mm QFP	29 mW/°C	2.89 W	2.31 W	1.59 W

(1) For the most current package and ordering information, see the Package Option Addendum at the end of this document, or see the TI website at www.ti.com.

RECOMMENDED OPERATING CONDITIONS

over operating free-air temperature range (unless otherwise noted)

			MIN	NOM	MAX	UNIT
	Digital/analog supply voltage	DVDD	3	3.3	3.6	V
	Half-bridge supply voltage	PVCC_xx	10		26	V
V_{IH}	High-level input voltage	3.3-V TTL, 5-V tolerant	2			V
V_{IL}	Low-level input voltage	3.3-V TTL, 5-V tolerant			0.8	V
T_A	Operating ambient temperature range		0		85	°C
T_J	Operating junction temperature range		0		150	°C
R_L (BTL)	Load impedance	Output filter: L = 22 µH, C = 680 nF	6.0	8		Ω
R_L (SE)			3.2	4		
R_L (PBTL)			3.2	4		
L_O (BTL)	Output-filter inductance	Minimum output inductance under short-circuit condition		10		µH
L_O (SE)				10		
L_O (PBTL)				10		

PWM OPERATION AT RECOMMENDED OPERATING CONDITIONS

PARAMETER	TEST CONDITIONS	MODE	VALUE	UNITS
Output sample rate 2×–1× oversampled	32-kHz data rate ±2%	12× sample rate	384	kHz
	44.1-, 88.2-, 176.4-kHz data rate ±2%	8×, 4×, and 2× sample rates	352.8	kHz
	48-, 96-, 192-kHz data rate ±2%	8×, 4×, and 2× sample rates	384	kHz

PLL INPUT PARAMETERS AND EXTERNAL FILTER COMPONENTS

PARAMETER		TEST CONDITIONS	MIN	TYP	MAX	UNIT
f_{MCLKI}	Frequency, MCLK (1 / t_{cyc2})		2.822		49	MHz
	MCLK duty cycle		40%	50%	60%	
	MCLK minimum high time	≥2-V MCLK = 49.152 MHz, within the minimum and maximum duty-cycle constraints	8			ns
	MCLK minimum low time	≤0.8-V MCLK = 49.152 MHz, within the minimum and maximum duty-cycle constraints	8			ns
	LRCLK allowable drift before LRCLK reset				10	MCLKs
	External PLL filter capacitor C1	SMD 0603 Y5V		47		nF
	External PLL filter capacitor C2	SMD 0603 Y5V		4.7		nF
	External PLL filter resistor R	SMD 0603, metal film		470		Ω

Copyright © 2009, Texas Instruments Incorporated

ELECTRICAL CHARACTERISTICS

DC Characteristics, T_A = 25°C, PVCC_X, AVCC = 18 V, R_L = 8 Ω (unless otherwise noted)

PARAMETER			TEST CONDITIONS	MIN	TYP	MAX	UNIT
V_{OH}	High-level output voltage	3.3-V TTL and 5-V tolerant (1)	I_{OH} = –4 mA	2.4			V
V_{OL}	Low-level output voltage	3.3-V TTL and 5-V tolerant (1)	I_{OL} = 4 mA			0.5	V
| VOS |	Class-D output offset voltage				±26		mV
V_{BYPASS}	PVCC/8 reference for analog section		No load	2.2	2.26	2.3	V
I_{IL}	Low-level input current	3.3-V TTL	$V_I = V_{IL}$			±2	µA
		5-V tolerant(1)	V_I = 0 V, DVDD = 3 V			±2	
I_{IH}	High-level input current	3.3-V TTL	$V_I = V_{IH}$			±2	µA
		5-V tolerant	V_I = 5.5 V, DVDD = 3 V			±20	
I_{DD}	Input supply current	Supply voltage (DVDD, AVDD)	Normal mode	43	65	80	mA
			Power down ($\overline{PDNZ}$ = LOW)	2	8	16	
			Reset ($\overline{RESET}$ = LOW)	11	23	33	
I_{CC}	Quiescent supply current		No load	14	33	57	mA
$I_{CC(\overline{RESET})}$	Quiescent supply current in reset mode		No load		58	176	µA
$I_{CC(\overline{PDNZ})}$	Quiescent supply current in power-down mode		No load		58	176	µA
PSRR	DC power-supply rejection ratio		PVCC = 17.5 V to 18.5 V		60		dB
$R_{DS(on)}$	Drain-source on-state resistance, high-side		V_{CC} = 18 V , I_O = 500 mA, T_J = 25°C		240		mΩ
	Low-side				240		
	Total				480	850	
t_{ON}	Turnon time (SE mode) (Set Reg 0x1A bit 7 to 1)		$C_{(BYPASS)}$ = 1 µF, Time required for $C_{(BYPASS)}$ to reach its final value		500		ms
	Turnon time (BTL mode) (Set Reg 0x1A bit 7 to 0)				30		
t_{OFF}	Turnoff time (SE mode) (Set Reg 0X1A bit 7 to 1)				500		ms
	Turnoff time (BTL mode) (Set Reg 0X1A bit 7 to 0)				30		

(1) 5-V tolerant pins are $\overline{PDN}$, $\overline{RESET}$, $\overline{MUTE}$, SCLK, LRCLK, MCLK, SDIN1, SDIN2, SDA, SCL, and HPSEL.

Copyright © 2009, Texas Instruments Incorporated

AC Characteristics, T_A = 25°C, PVCC_X, AVCC = 18 V, AVDD, DVDD = 3.3 V, R_L = 8 Ω (unless otherwise noted)(1)

PARAMETER		TEST CONDITIONS	MIN	TYP	MAX	UNIT
KSVR	Supply ripple rejection	100-mV_{PP} ripple at 20 Hz–20 kHz, BTL, 50% duty cycle PWM		–60		dB
P_O	Continuous output power	BTL (R_L = 8 Ω, THD+N = 10%, f = 1 kHz, PVCC = 18 V)		20.6		W
		BTL (R_L = 8 Ω, THD+N = 7%, f = 1 kHz, PVCC = 18 V)		19.3		W
		SE (R_L = 4 Ω, THD+N = 10%, f = 1 kHz, PVCC = 24 V)		18.1		W
		SE (R_L = 4 Ω, THD+N = 7%, f = 1 kHz, PVCC = 24 V)		17.3		W
THD+N	Total harmonic distortion + noise (SE)	V_{CC} = 24 V, R_L = 4 Ω, f = 1 kHz, P_O = 10 W (half-power)		0.08%		
	Total harmonic distortion + noise (BTL)	V_{CC} = 18 V, R_L = 8 Ω, f = 1 kHz, P_O = 10 W (half-power)		0.05%		
V_n	Output integrated noise	20 Hz to 22 kHz (BD mode)		115		µV
		A-weighted filter; $\overline{MUTE}$ = LOW		–82		dBV
Crosstalk		P_O = 1 W, f = 1 kHz		–69		dB
SNR	Signal-to-noise ratio	Maximum output at THD+N < 1%, f = 1 kHz, A-weighted		99		dB
	Thermal trip point (output shut down, unlatched fault)			150		°C
	Thermal hysteresis			15		°C

(1) All measurement in AD mode.

AC Characteristics, T_A = 25°C, PVCC_X, AVCC = 12 V, AVDD, DVDD = 3.3 V, R_L = 8 Ω (unless otherwise noted)(1)

PARAMETER		TEST CONDITIONS	MIN	TYP	MAX	UNIT
KSVR	Supply ripple rejection	100-mVpp ripple at 20 Hz–20 kHz, BTL, 50% duty cycle PWM		–60		dB
P_O	Continuous output power	BTL (R_L = 8 Ω, THD+N = 10%, f = 1 kHz)		9.2		W
		BTL (R_L = 8 Ω, THD+N = 7%, f = 1 kHz)		8.7		W
		SE (R_L = 4 Ω, THD+N = 10%, f = 1 kHz)		4.5		W
		SE (R_L = 4 Ω, THD+N = 7%, f = 1 kHz)		4.2		W
THD+N	Total harmonic distortion + noise (BTL)	V_{CC} = 12 V, R_L = 8 Ω, f = 1 kHz, P_O = 5 W (half-power)		0.07%		
V_n	Output integrated noise	20 Hz to 22 kHz (BD mode)		115		µV
		A-weighted filter		–82		dBV
Crosstalk		P_O = 1 W, f = 1 kHz		–75		dB
SNR	Signal-to-noise ratio	Maximum output at THD+N < 1%, f = 1 kHz, A-weighted		96		dB
	Thermal trip point (output shutdown, unlatched fault)			150		°C
	Thermal hysteresis			15		°C

(1) All measurement in AD mode.

Copyright © 2009, Texas Instruments Incorporated

SERIAL AUDIO PORTS SLAVE MODE

over recommended operating conditions (unless otherwise noted)

PARAMETER		TEST CONDITIONS	MIN	TYP	MAX	UNIT
f_{SCLKIN}	Frequency, SCLK 32 × f_S, 48 × f_S, 64 × f_S	C_L = 30 pF	1.024		12.288	MHz
t_{su1}	Setup time, LRCLK to SCLK rising edge		10			ns
t_{h1}	Hold time, LRCLK from SCLK rising edge		10			ns
t_{su2}	Setup time, SDIN to SCLK rising edge		10			ns
t_{h2}	Hold time, SDIN from SCLK rising edge		10			ns
	LRCLK frequency		32	48	192	kHz
	SCLK duty cycle		40%	50%	60%	
	LRCLK duty cycle		40%	50%	60%	
	SCLK rising edges between LRCLK rising edges		32		64	SCLK edges
$t_{(edge)}$	LRCLK clock edge with respect to the falling edge of SCLK		–1/4		1/4	SCLK period

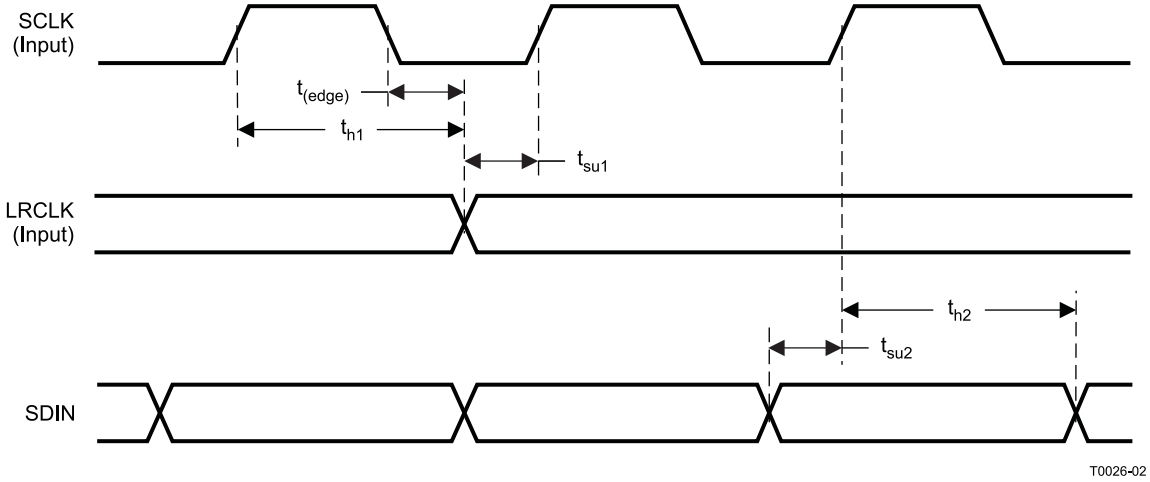

Figure 1. Slave-Mode Serial-Data Interface Timing

I²C SERIAL CONTROL PORT OPERATION

Timing characteristics for I²C Interface signals over recommended operating conditions (unless otherwise noted)

PARAMETER		TEST CONDITIONS	MIN	MAX	UNIT
f_{SCL}	Frequency, SCL	No wait states		400	kHz
$t_{w(H)}$	Pulse duration, SCL high		0.6		µs
$t_{w(L)}$	Pulse duration, SCL low		1.3		µs
t_r	Rise time, SCL and SDA			300	ns
t_f	Fall time, SCL and SDA			300	ns
t_{su1}	Setup time, SDA to SCL		100		ns
t_{h1}	Hold time, SCL to SDA		0		ns
$t_{(buf)}$	Bus free time between stop and start conditions		1.3		µs
t_{su2}	Setup time, SCL to start condition		0.6		µs
t_{h2}	Hold time, start condition to SCL		0.6		µs
t_{su3}	Setup time, SCL to stop condition		0.6		µs
C_L	Load capacitance for each bus line			400	pF

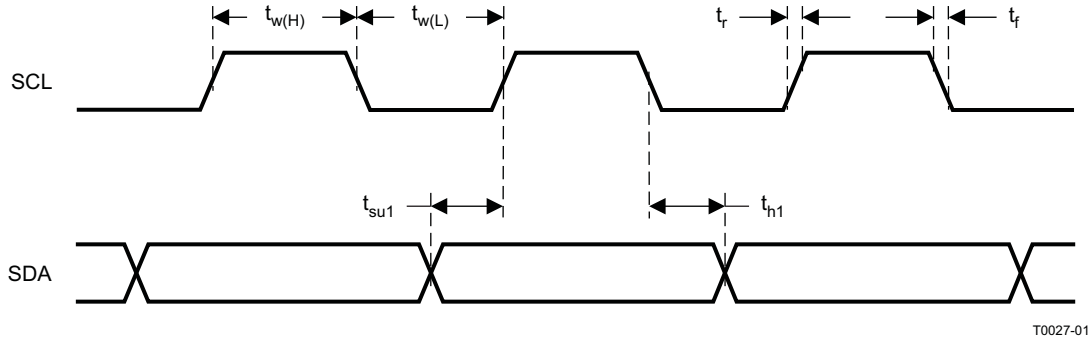

Figure 2. SCL and SDA Timing

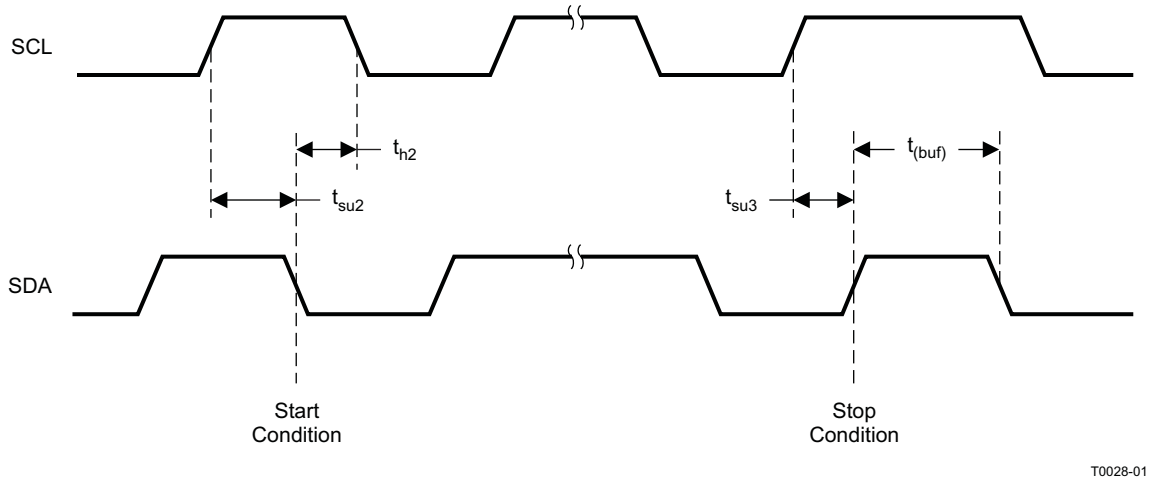

Figure 3. Start and Stop Conditions Timing

Copyright © 2009, Texas Instruments Incorporated

RESET TIMING ($\overline{\text{RESET}}$)

Control signal parameters over recommended operating conditions (unless otherwise noted)

PARAMETER		MIN	TYP	MAX	UNIT
$t_{d(VALID_LOW)}$	Time to assert VALID (reset to power stage) low		300		ns
$t_{w(RESET)}$	Pulse duration, $\overline{\text{RESET}}$ active		1		ms
$t_{d(I2C_ready)}$	Time to enable I^2C		3.5		ms
$t_{d(run)}$	Device start-up time (after start-up command via I^2C)	10			ms

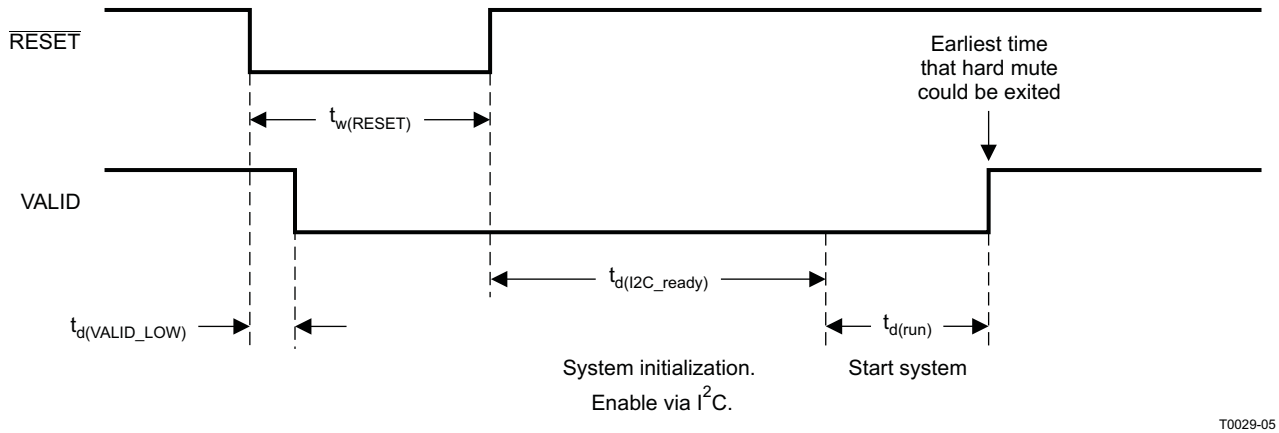

Figure 4. Reset Timing

POWER-DOWN ($\overline{\text{PDN}}$) TIMING

Control signal parameters over recommended operating conditions (unless otherwise noted)

PARAMETER		MIN	TYP	MAX	UNIT
$t_{d(VALID_LOW)}$	Time to assert VALID (reset to power stage) low		725		µs
$t_{d(STARTUP)}$	Device startup time		120		ms
t_w	Minimum pulse duration required		800		ns

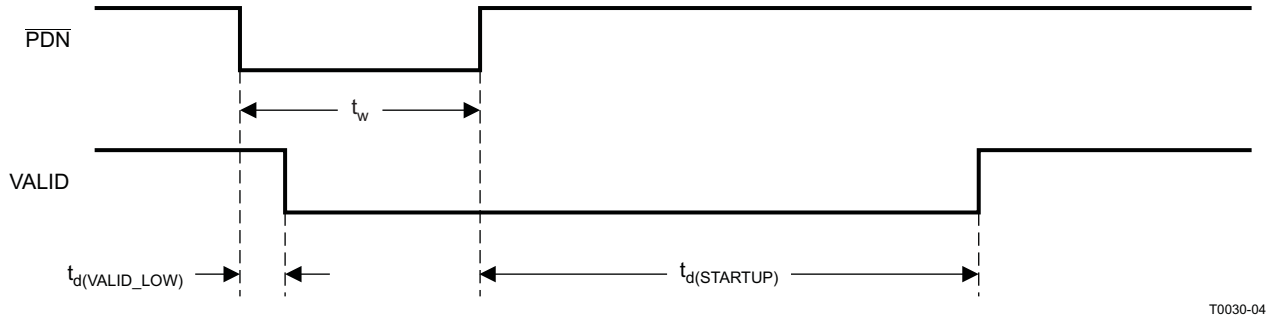

Figure 5. Power-Down Timing

BACK-END ERROR ($\overline{\text{BKND_ERR}}$)

Control signal parameters over recommended operating conditions (unless otherwise noted)

PARAMETER		MIN	TYP	MAX	UNIT
$t_{w(ER)}$	Pulse duration, $\overline{\text{BKND_ERR}}$ active (active-low)		350	None	ns
$t_{p(valid_high)}$	Programmable. Time to stay in the OUT_x low state. After $t_{p(valid_high)}$, the TAS5716 attempts to bring the system out of the OUT_x low state if $\overline{\text{BKND_ERR}}$ is high. See register 0x1C.				ms
$t_{p(valid_low)}$	Time TAS5716 takes to bring OUT_x low after $\overline{\text{BKND_ERR}}$ assertion.		350		ns

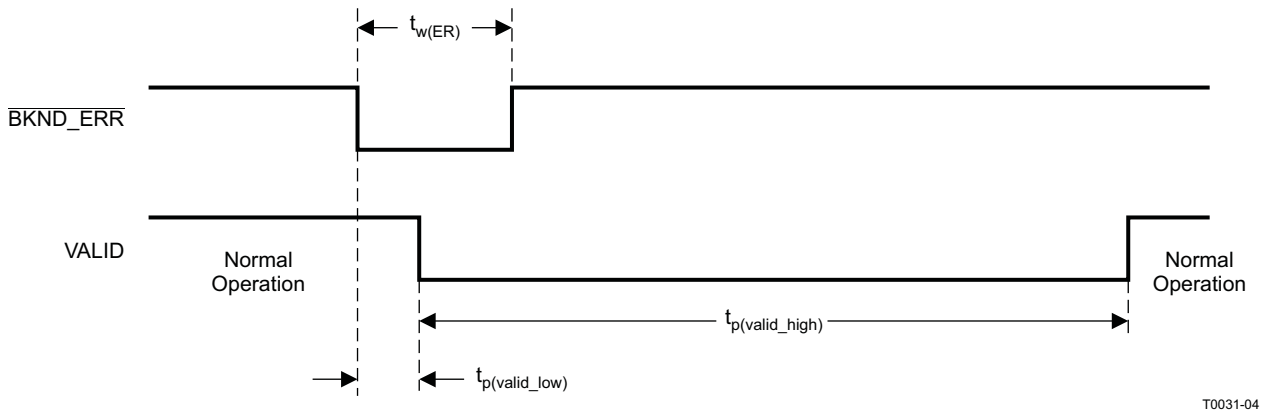

Figure 6. Error Recovery Timing

MUTE TIMING ($\overline{\text{MUTE}}$)

Control signal parameters over recommended operating conditions (unless otherwise noted)

PARAMETER		MIN	TYP	MAX	UNIT
$t_{d(VOL)}$	Volume ramp time. Ramp time = number of steps (programmable number of steps, see register 0x0E) × step size[(1)]		1024		steps

(1) Stepsize = 4 LRCLKs (for 32–48 kHz sample rate); 8 LRCLKs (for 88.2–96 kHz sample rate); 16 LRCLKs (for 176.4–192 kHz sample rate)

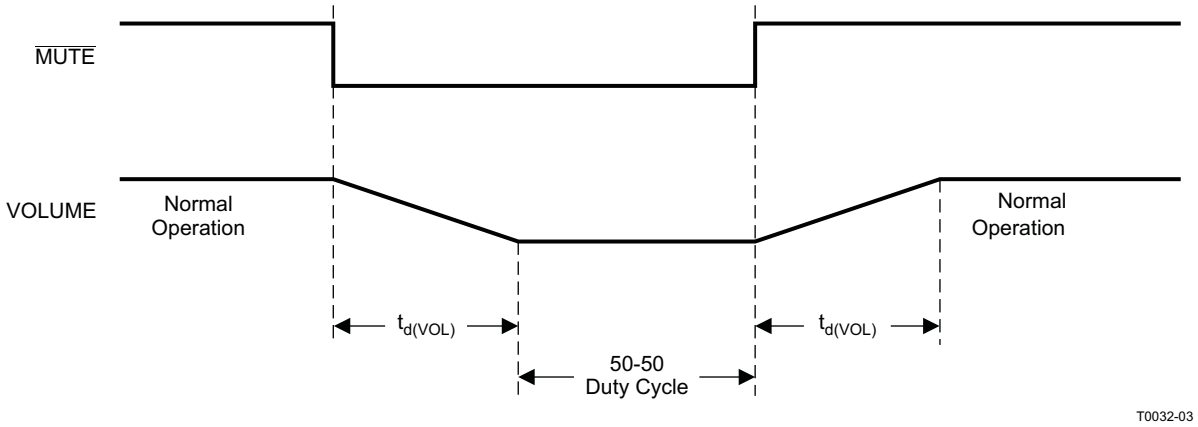

Figure 7. Mute Timing

Copyright © 2009, Texas Instruments Incorporated

HEADPHONE SELECT (HPSEL)

PARAMETER		MIN	MAX	UNIT
$t_{w(MUTE)}$	Pulse duration, HPSEL active	350	None	ns
$t_{d(VOL)}$	Soft volume update time	See (1)		ms
$t_{(SW)}$	Switch-over time	0.2	1	ms

(1) Defined by rate setting. See the Volume Configuration Register section.
Figure 8 and Figure 9 show functionality when bit 4 in HP configuration register is set to DISABLE line output from HP_PWM outputs. If bit 4 is not set, than the HP PWM outputs are not disabled when HPSEL is brought low.

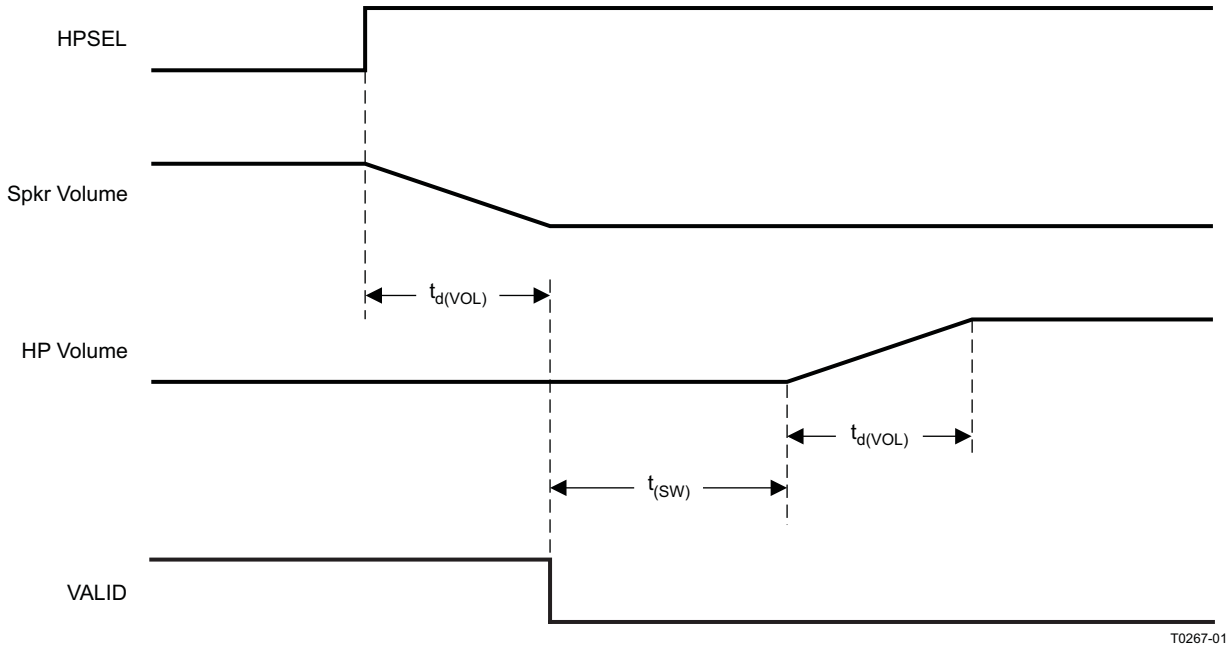

Figure 8. HPSEL Timing for Headphone Insertion

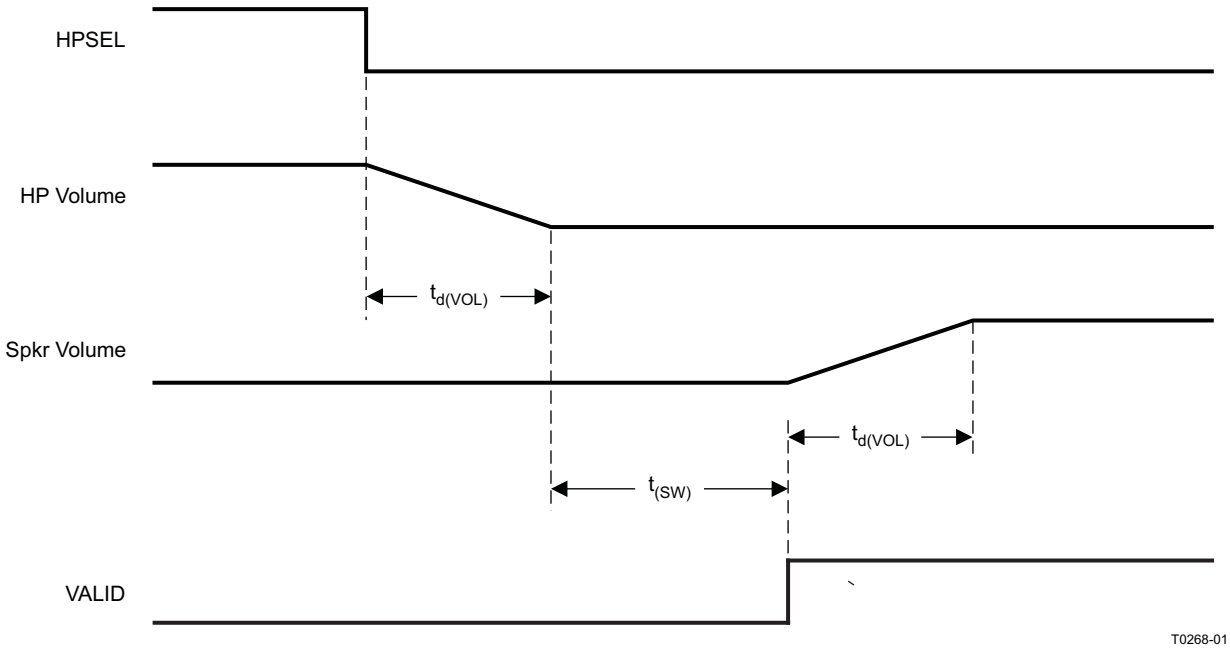

Figure 9. HPSEL Timing for Headphone Extraction

TYPICAL CHARACTERISTICS, BTL CONFIGURATION

TOTAL HARMONIC DISTORTION + NOISE (BTL) vs FREQUENCY

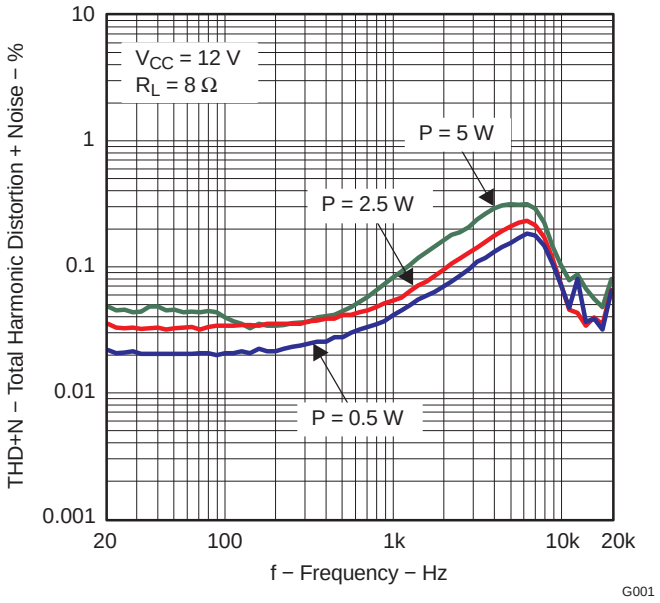

Figure 10.

TOTAL HARMONIC DISTORTION + NOISE (BTL) vs FREQUENCY

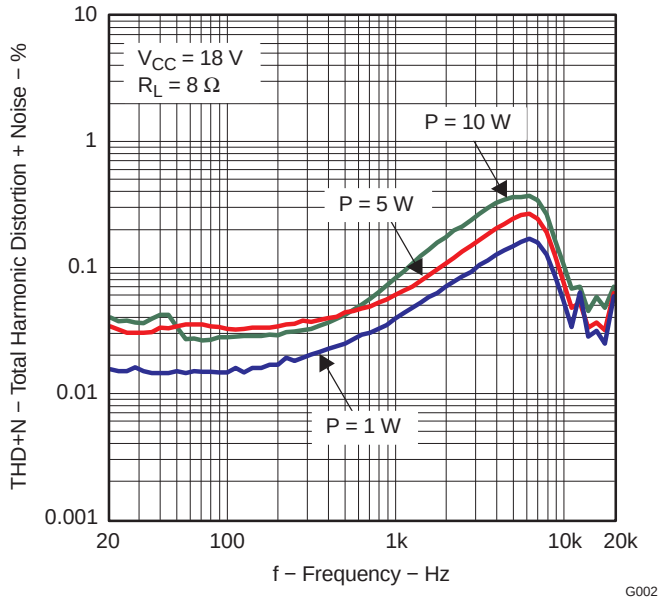

Figure 11.

TOTAL HARMONIC DISTORTION + NOISE (BTL) vs FREQUENCY

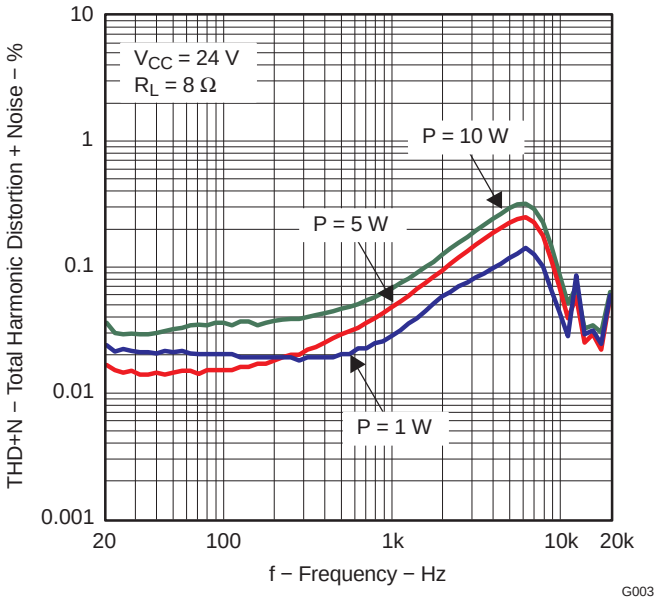

Figure 12.

TOTAL HARMONIC DISTORTION + NOISE (BTL) vs OUTPUT POWER

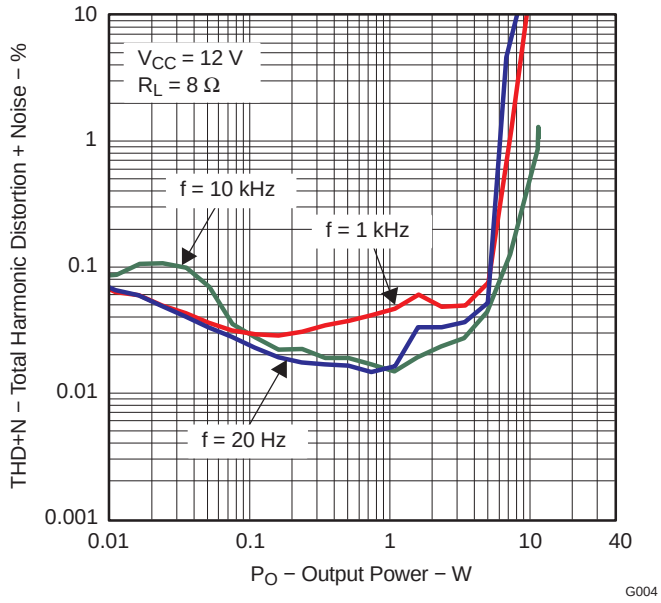

Figure 13.

Copyright © 2009, Texas Instruments Incorporated

TYPICAL CHARACTERISTICS, BTL CONFIGURATION (continued)

TOTAL HARMONIC DISTORTION + NOISE (BTL) vs OUTPUT POWER

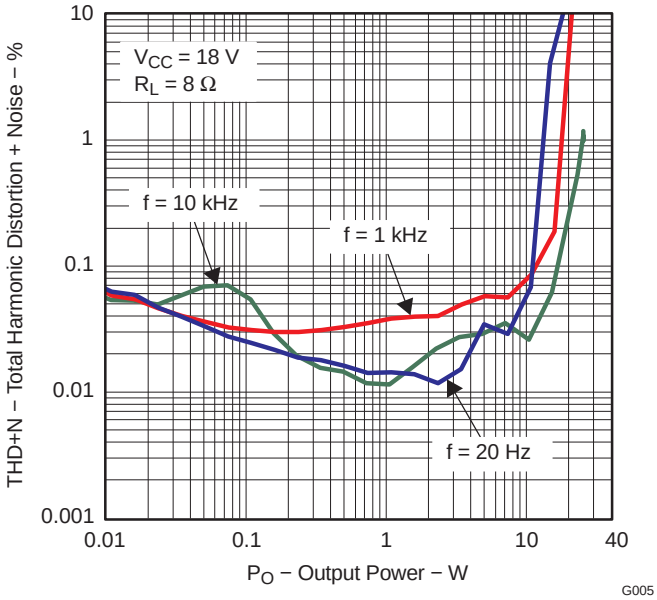

Figure 14.

TOTAL HARMONIC DISTORTION + NOISE (BTL) vs OUTPUT POWER

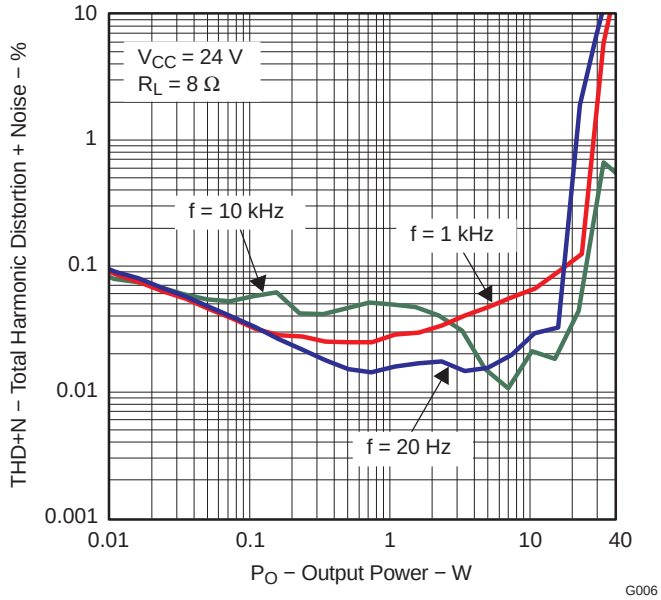

Figure 15.

EFFICIENCY vs OUTPUT POWER

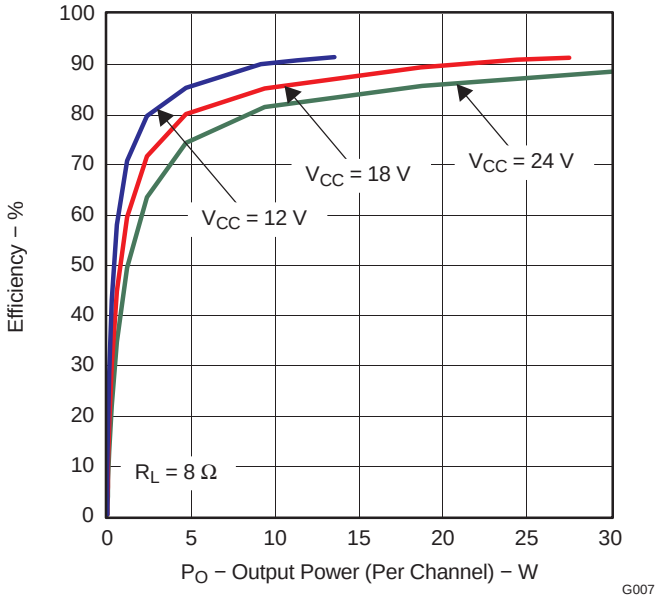

Figure 16.

SUPPLY CURRENT vs TOTAL OUTPUT POWER

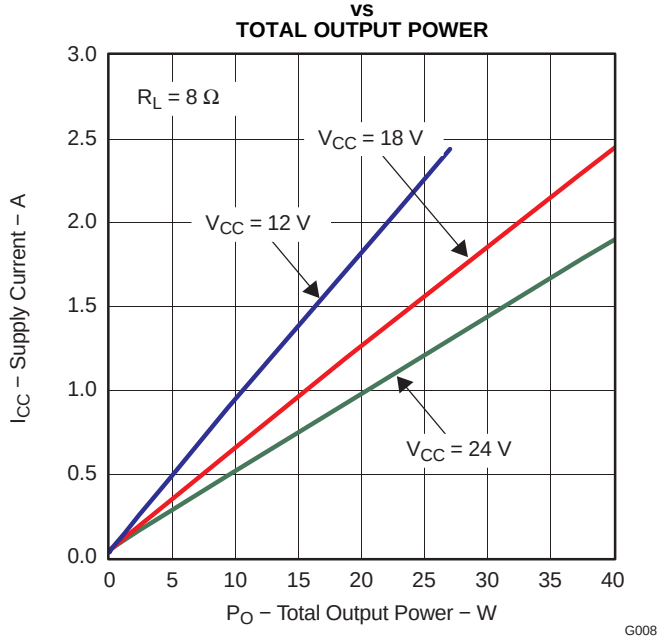

Figure 17.

TYPICAL CHARACTERISTICS, BTL CONFIGURATION (continued)

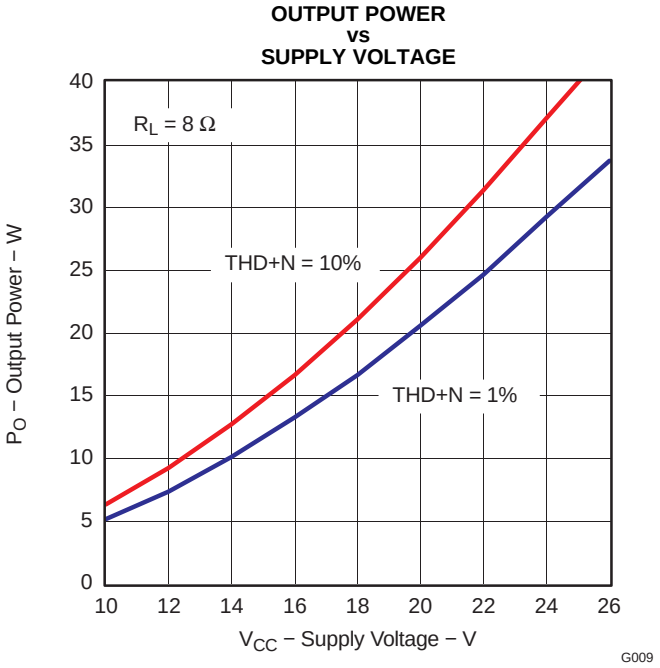

Figure 18.

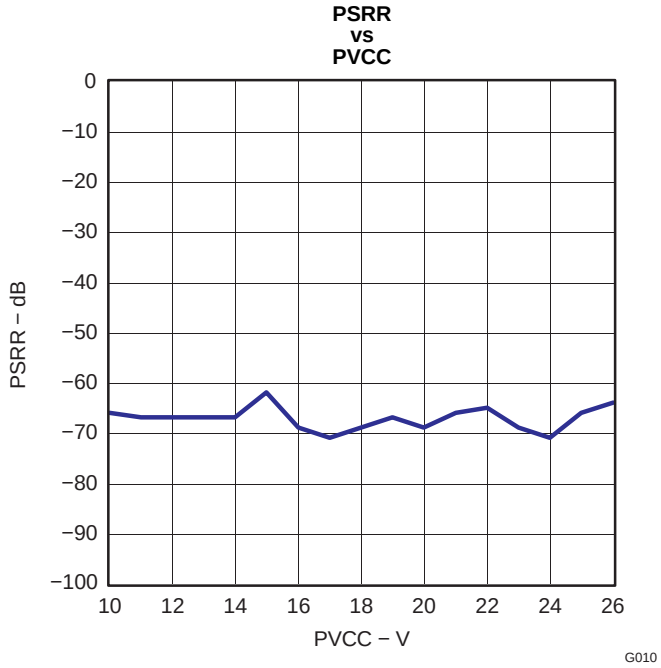

Figure 19.

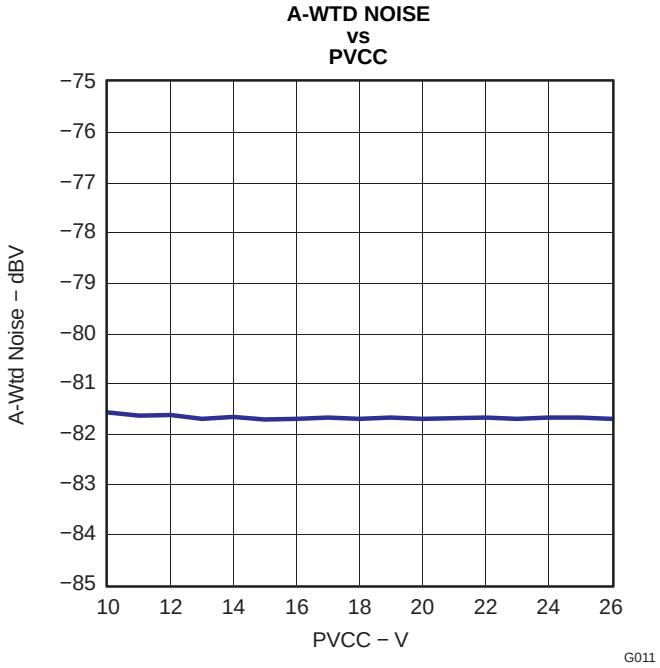

Figure 20.

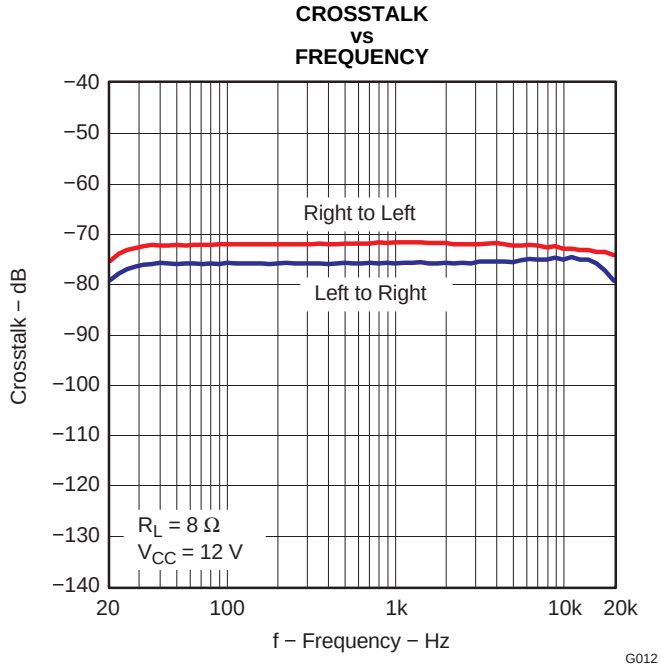

Figure 21.

Copyright © 2009, Texas Instruments Incorporated

TYPICAL CHARACTERISTICS, BTL CONFIGURATION (continued)

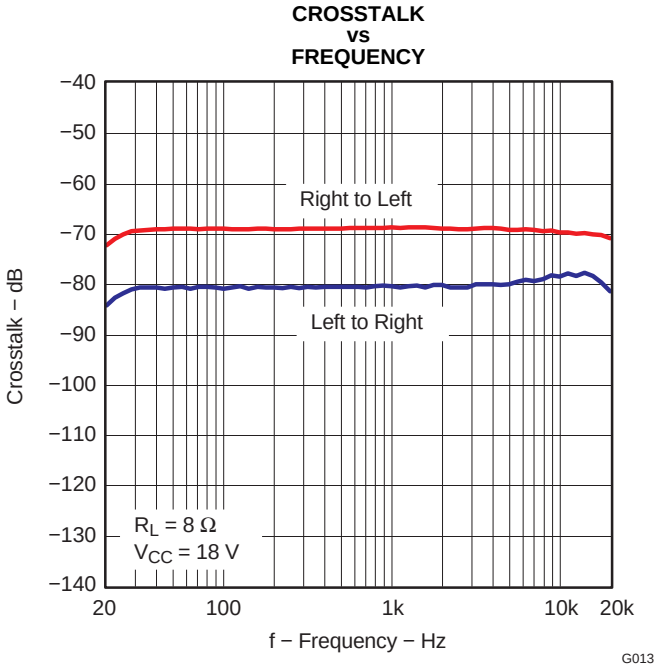

Figure 22.

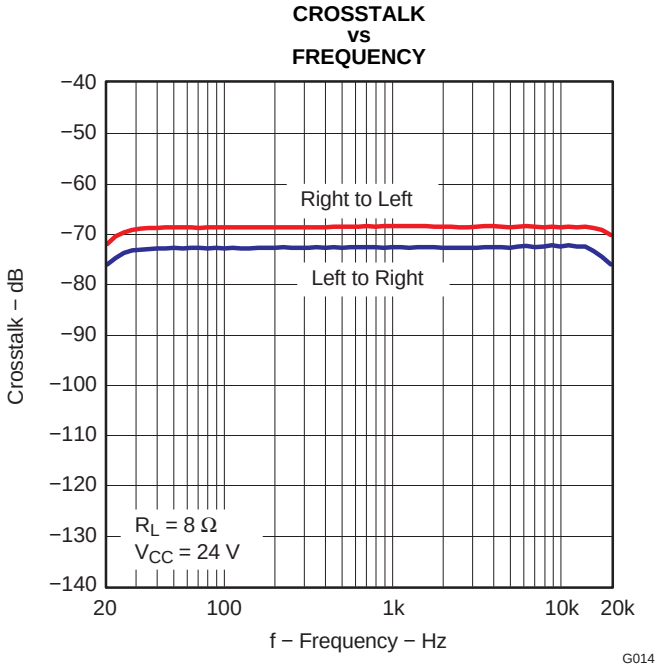

Figure 23.

TYPICAL CHARACTERISTICS, SE CONFIGURATION

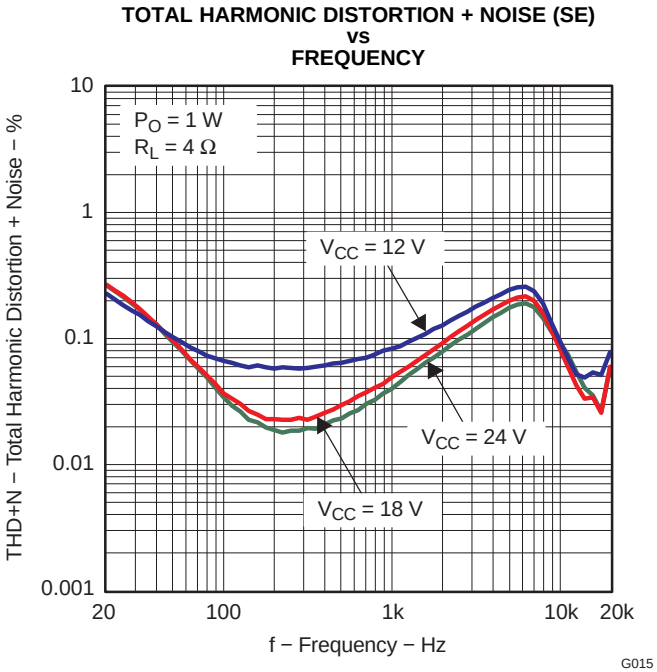

Figure 24.

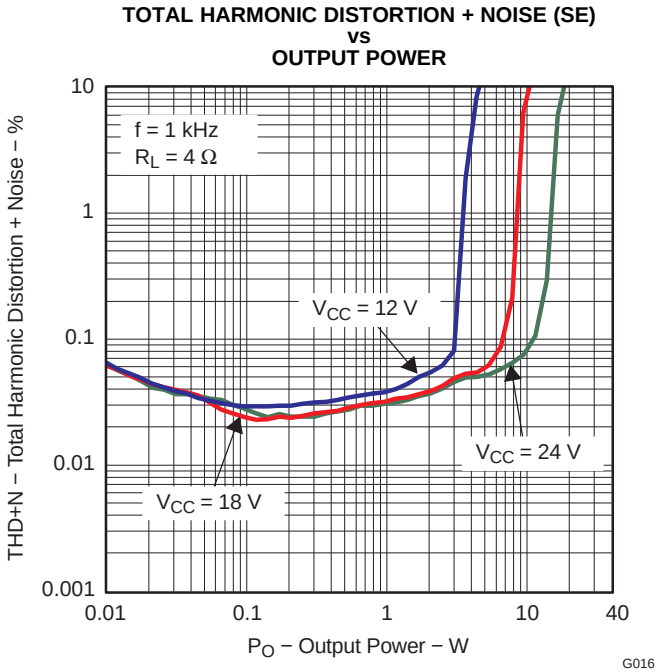

Figure 25.

TYPICAL CHARACTERISTICS, SE CONFIGURATION (continued)

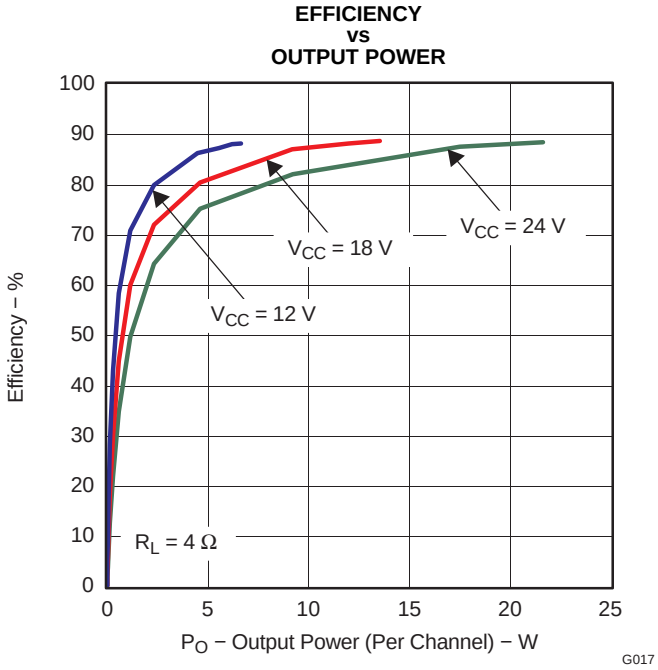

Figure 26.

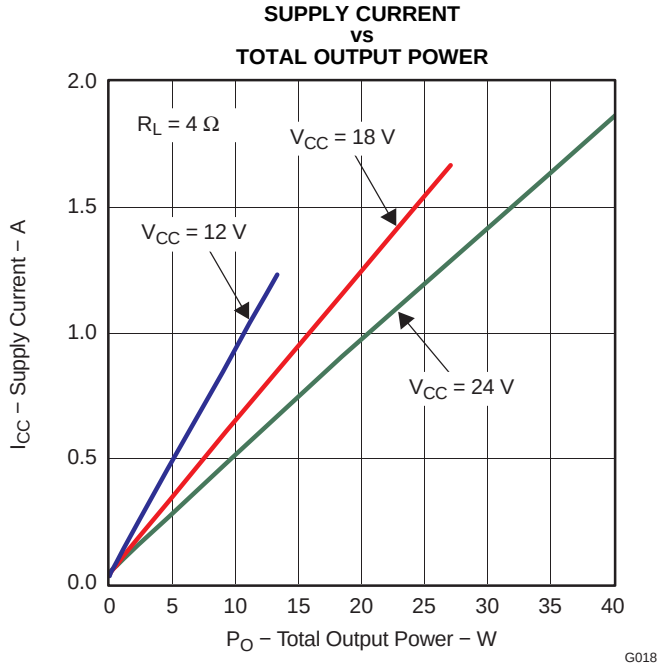

Figure 27.

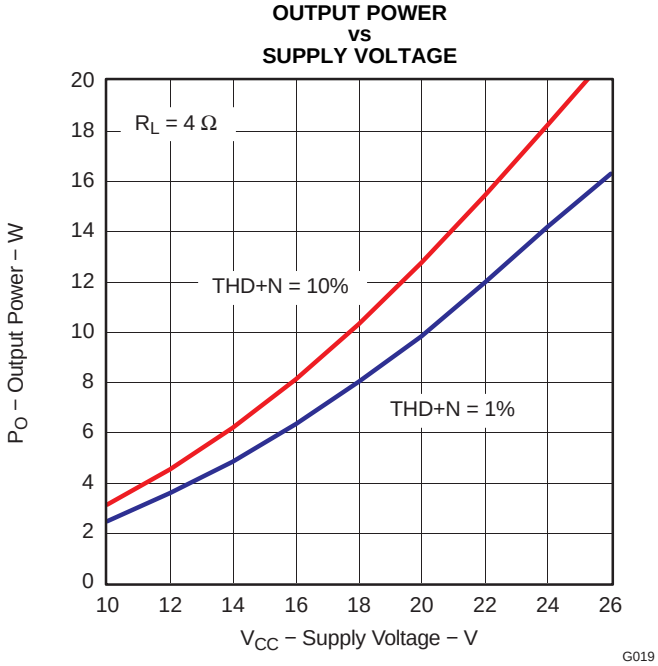

Figure 28.

Copyright © 2009, Texas Instruments Incorporated

DETAILED DESCRIPTION

POWER SUPPLY

The digital portion of the chip requires 3.3 V, and the power stages can work from 10 V to 26 V.

CLOCK, AUTO DETECTION, AND PLL

The TAS5716 DAP is a slave device. It accepts MCLK, SCLK, and LRCLK. The digital audio processor (DAP) supports all the sample rates and MCLK rates that are defined in the clock control register.

The TAS5716 checks to verify that SCLK is a specific value of 32 f_S, 48 f_S, or 64 f_S. The DAP only supports a 1 × f_S LRCLK. The timing relationship of these clocks to SDIN1/2 is shown in subsequent sections. The clock section uses MCLK or the internal oscillator clock (when MCLK is unstable or absent) to produce the internal clock.

The DAP can autodetect and set the internal clock-control logic to the appropriate settings for the frequencies of 32 kHz, normal speed (44.1 or 48 kHz), double speed (88.2 kHz or 96 kHz), and quad speed (176.4 kHz or 192 kHz). The automatic sample rate detection can be disabled and the values set via I^2C in the clock control register.

The DAP also supports an AM interference-avoidance mode during which the clock rate is adjusted, in concert with the PWM sample rate converter, to produce a PWM output at 7 × f_S, 8 × f_S, or 6 × f_S.

The sample rate must be set manually during AM interference avoidance and when de-emphasis is enabled.

SERIAL DATA INTERFACE

Serial data is input on SDIN1/2. The PWM outputs are derived from SDIN1/2. The TAS5716 DAP accepts 32-, 44.1-, 48-, 88.2-, 96-, 176.4-, and 192-kHz serial data as 16-, 18-, 20-, or 24-bit data in left-justified, right-justified, or I^2S serial-data format.

PWM SECTION

The TAS5716 DAP device uses noise-shaping and sophisticated error correction algorithms to achieve high power efficiency and high-performance digital audio reproduction. The DAP uses a fourth-order noise shaper that has >100-dB SNR performance from 20 Hz to 20 kHz. The PWM section accepts 24-bit PCM data from the DAP and outputs four PWM audio output channels. The TAS5716 PWM section output supports bridge-tied loads.

The PWM section has individual channel dc-blocking filters that can be enabled and disabled. The filter cutoff frequency is less than 1 Hz. Individual channel de-emphasis filters for 32-, 44.1-, and 48-kHz are included and can be enabled and disabled.

Finally, the PWM section has an adjustable maximum modulation limit of 93.8% to 99.2%.

I^2C COMPATIBLE SERIAL-CONTROL INTERFACE

The TAS5716 DAP has an I^2C serial-control slave interface to receive commands from a system controller. The serial-control interface supports both normal-speed (100-kHz) and high-speed (400-kHz) operations without wait states. As an added feature, this interface operates even if MCLK is absent.

The serial-control interface supports both single-byte and multiple-byte read and write operations for status registers and the general control registers associated with the PWM.

The I^2C interface supports a special mode which permits I^2C write operations to be broken up into multiple data-write operations that are multiples of 4 data bytes. These are 6-, 10-, 14-, 18-, ... etc., -byte write operations that are composed of a device address, read/write bit, subaddress, and any multiple of 4 bytes of data. This permits the system to write large register values incrementally without blocking other I^2C transactions.

Copyright © 2009, Texas Instruments Incorporated

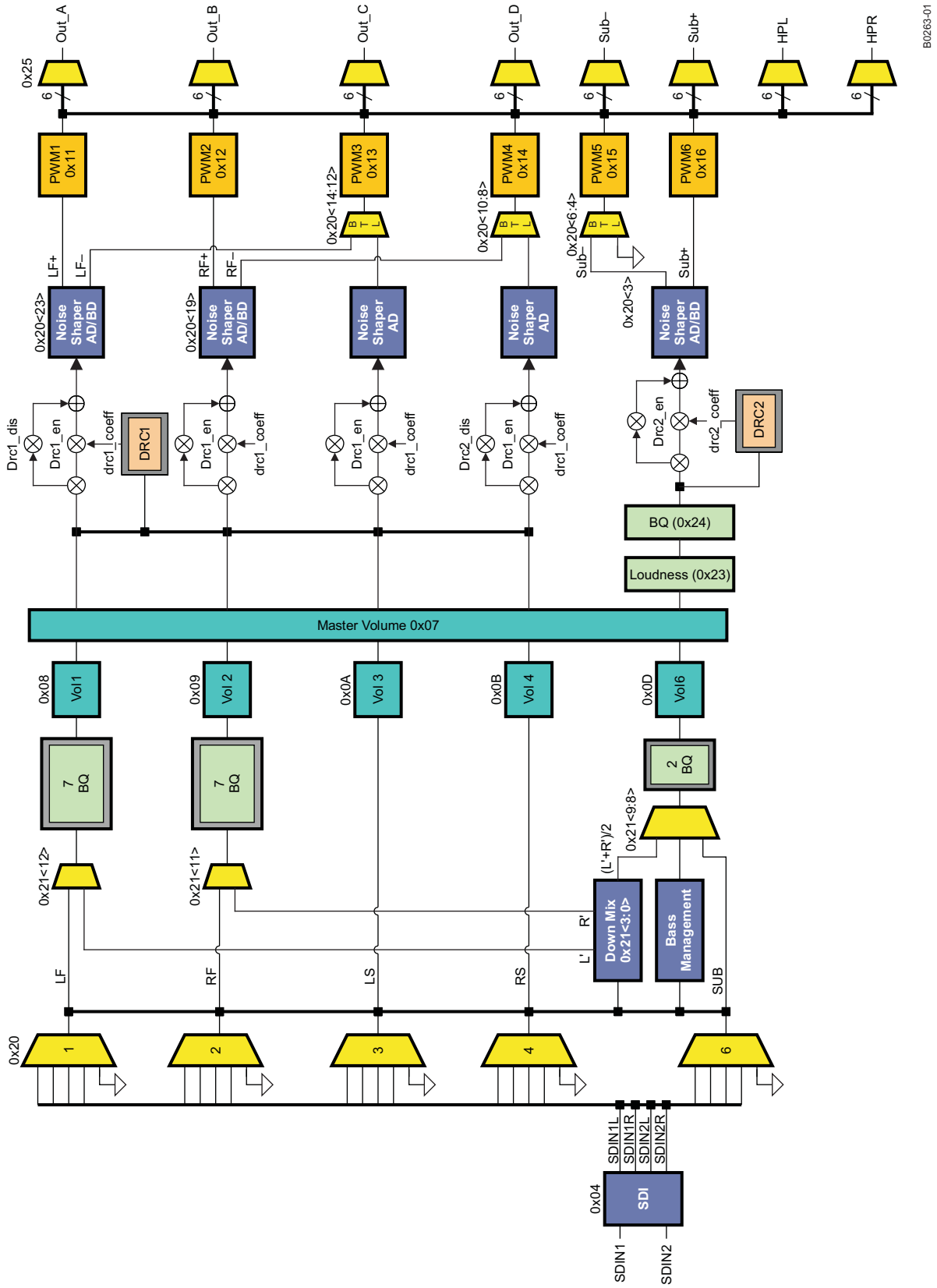

Figure 29. TAS5716 DAP Data Flow Diagram With I²C Registers

Copyright © 2009, Texas Instruments Incorporated

I²S TIMING

I²S timing uses LRCLK to define when the data being transmitted is for the left channel and when it is for the right channel. LRCLK is low for the left channel and high for the right channel. A bit clock running at 32, 48, or 64 × f_S is used to clock in the data. There is a delay of one bit clock from the time the LRCLK signal changes state to the first bit of data on the data lines. The data is written MSB-first and is valid on the rising edge of bit clock. The DAP masks unused trailing data-bit positions.

2-Channel I²S (Philips Format) Stereo Input

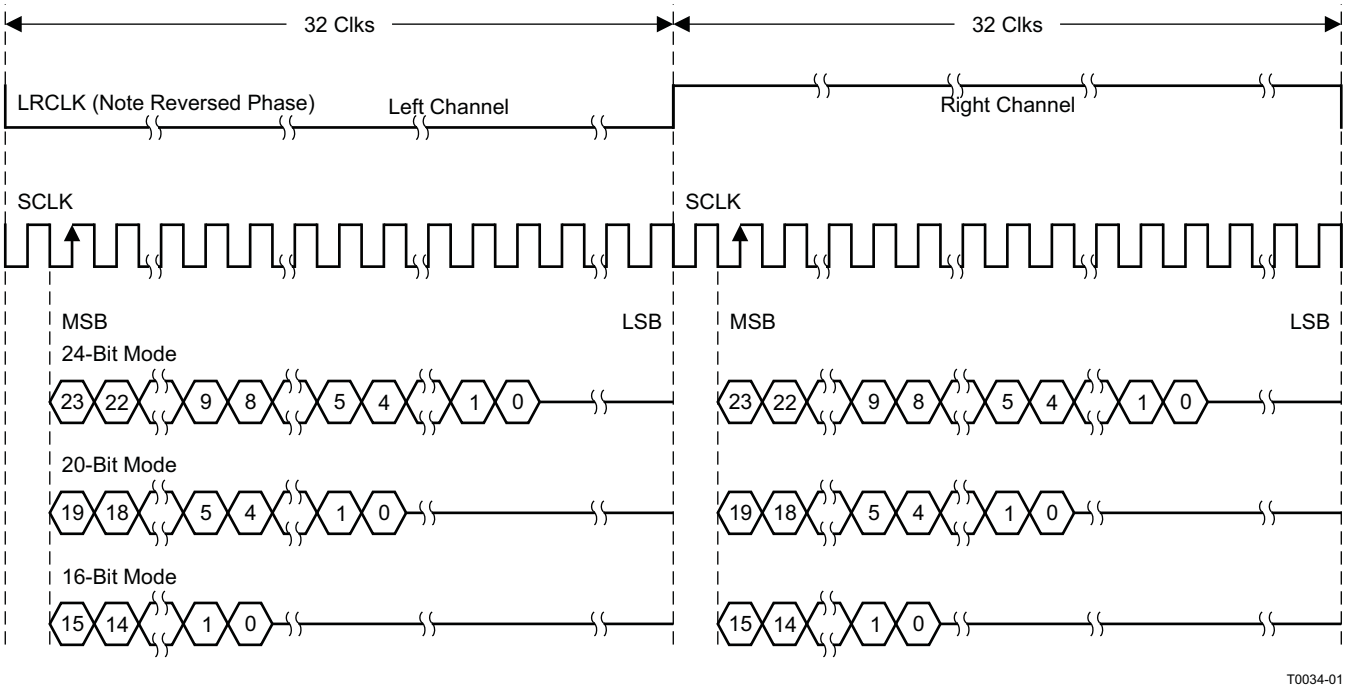

NOTE: All data presented in 2s-complement form with MSB first.

Figure 30. I²S 64-f_S Format

2-Channel I^{2}S (Philips Format) Stereo Input/Output (24-Bit Transfer Word Size)

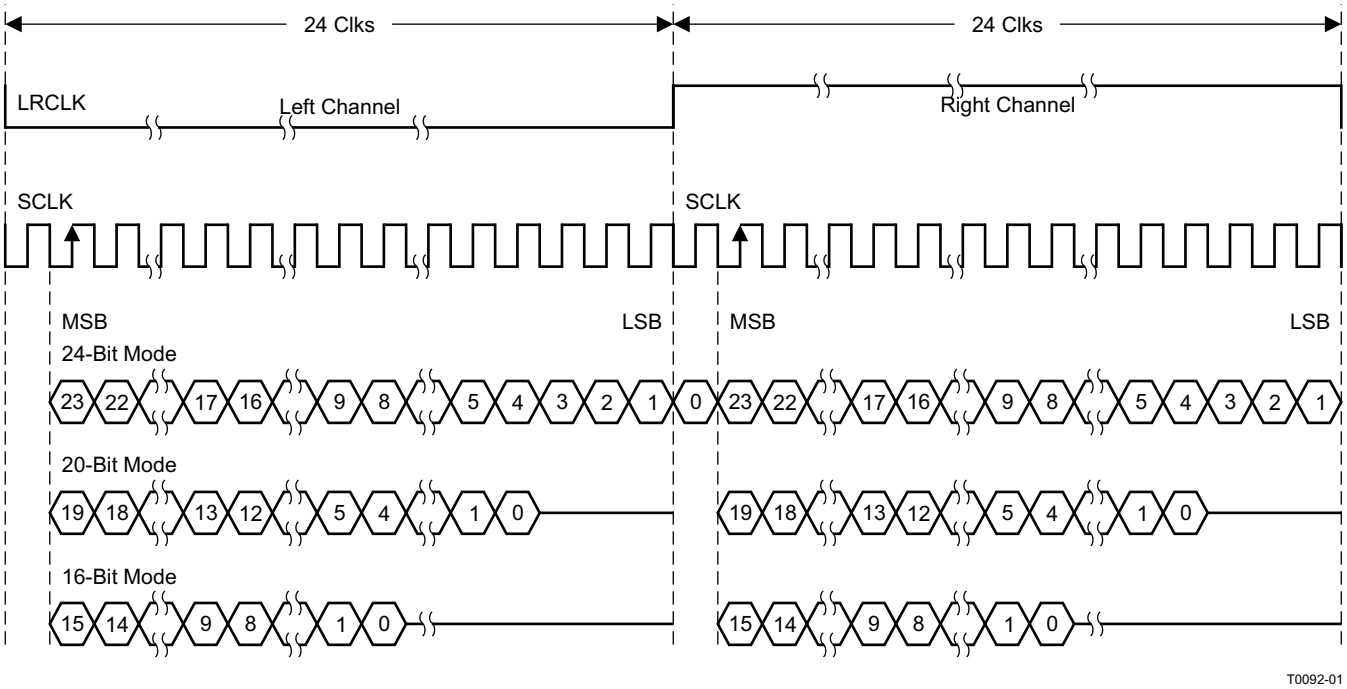

NOTE: All data presented in 2s-complement form with MSB first.

Figure 31. I^{2}S 48-f_S Format

2-Channel I^{2}S (Philips Format) Stereo Input

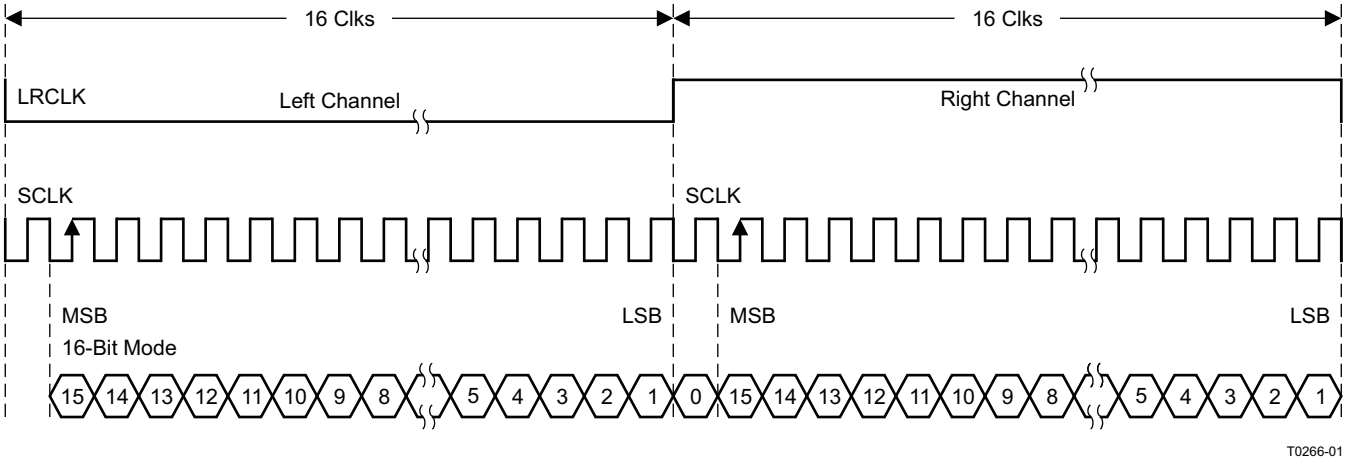

NOTE: All data presented in 2s-complement form with MSB first.

Figure 32. I^{2}S 32-f_S Format

Copyright © 2009, Texas Instruments Incorporated

LEFT-JUSTIFIED

Left-justified (LJ) timing uses LRCLK to define when the data being transmitted is for the left channel and when it is for the right channel. LRCLK is high for the left channel and low for the right channel. A bit clock running at 32, 48, or 64 × f_S is used to clock in the data. The first bit of data appears on the data lines at the same time LRCLK toggles. The data is written MSB-first and is valid on the rising edge of the bit clock. The DAP masks unused trailing data-bit positions.

2-Channel Left-Justified Stereo Input

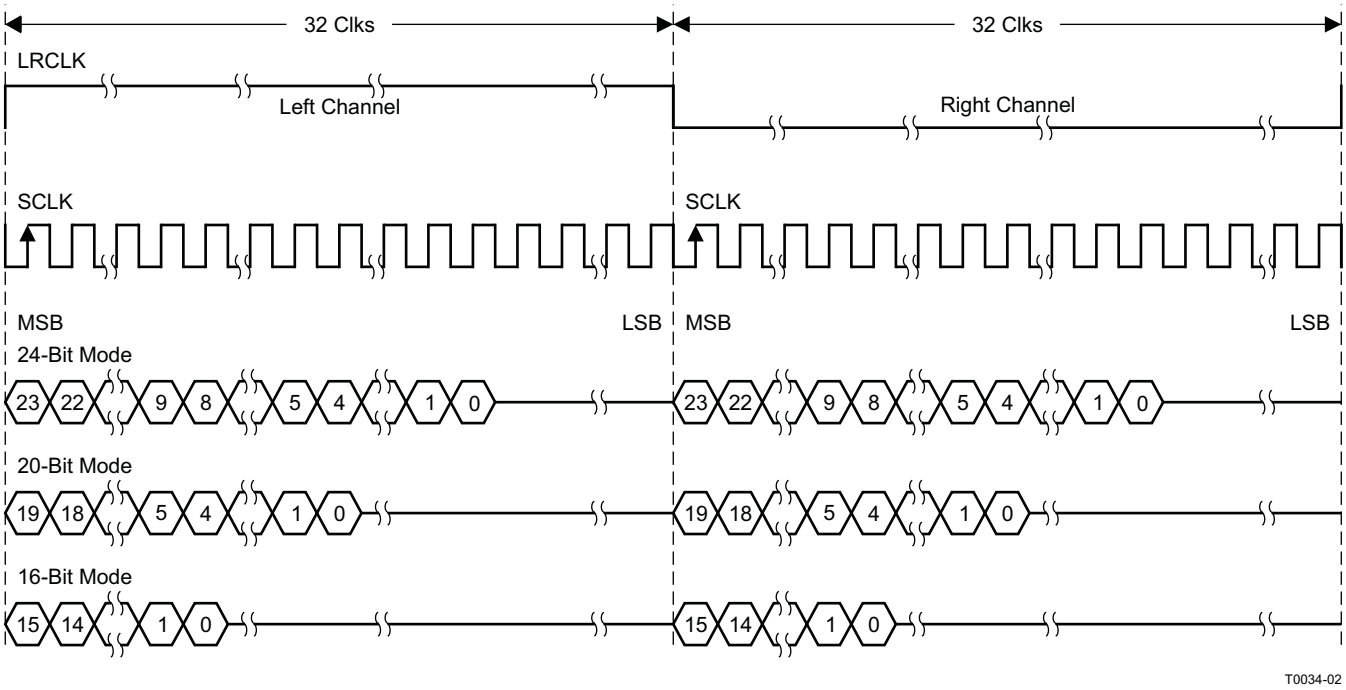

NOTE: All data presented in 2s-complement form with MSB first.

Figure 33. Left-Justified 64-f_S Format

2-Channel Left-Justified Stereo Input (24-Bit Transfer Word Size)

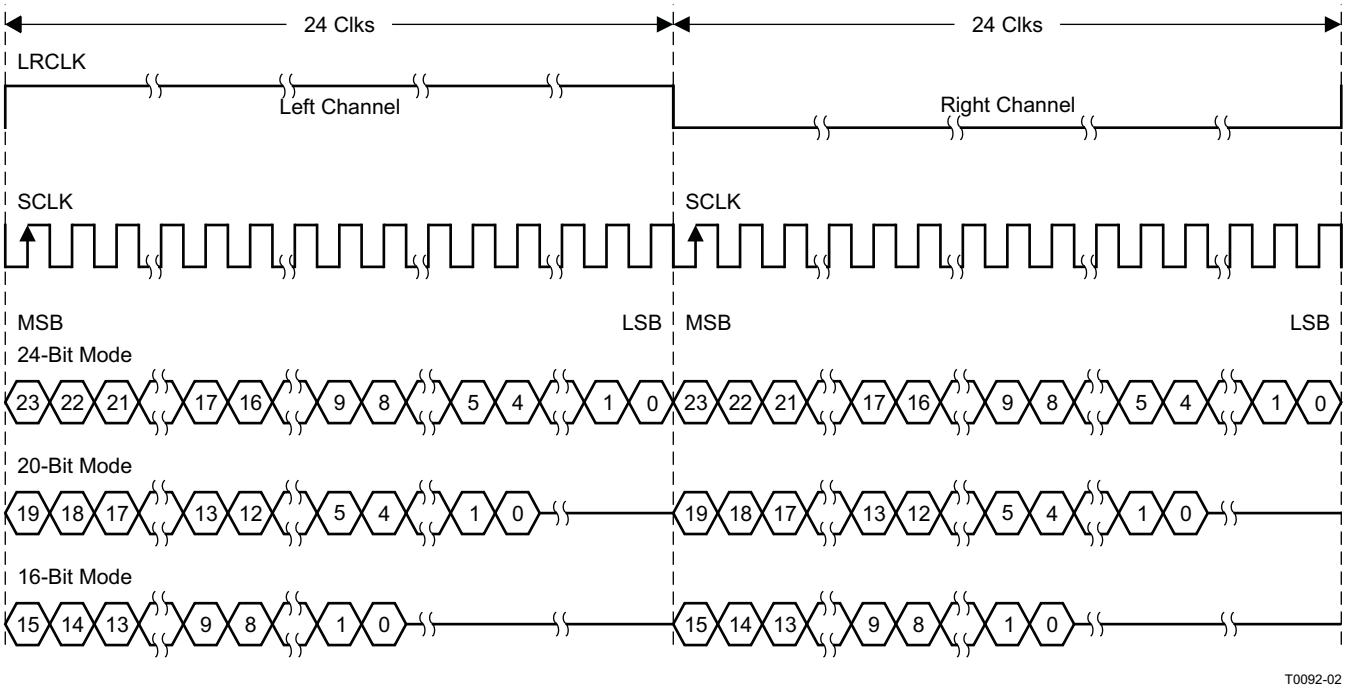

NOTE: All data presented in 2s-complement form with MSB first.

Figure 34. Left-Justified 48-f_S Format

2-Channel Left-Justified Stereo Input

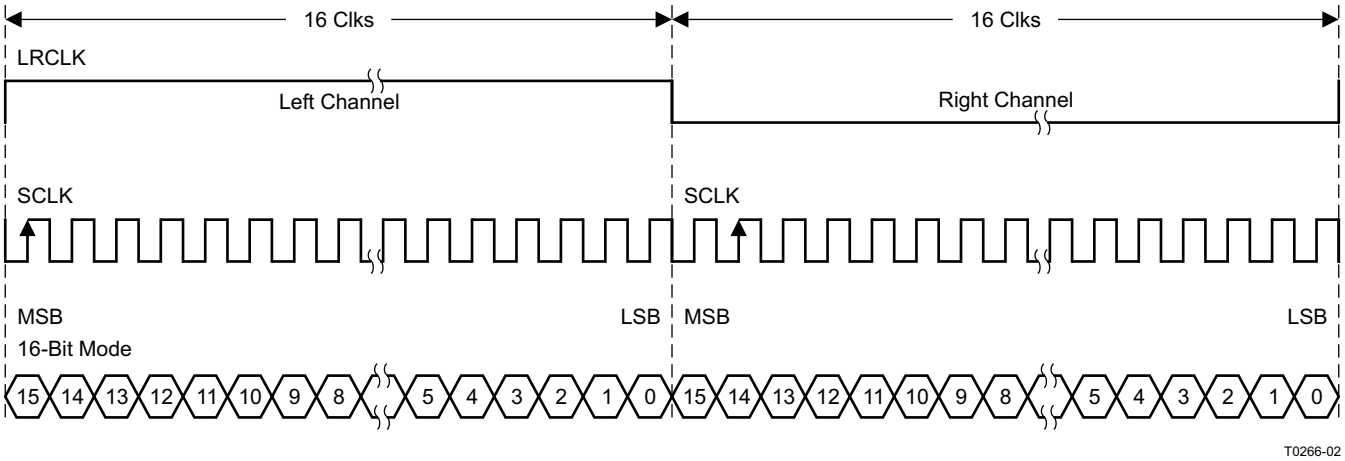

NOTE: All data presented in 2s-complement form with MSB first.

Figure 35. Left-Justified 32-f_S Format

Copyright © 2009, Texas Instruments Incorporated

RIGHT-JUSTIFIED

Right-justified (RJ) timing uses LRCLK to define when the data being transmitted is for the left channel and when it is for the right channel. LRCLK is high for the left channel and low for the right channel. A bit clock running at 32, 48, or 64 × f_S is used to clock in the data. The first bit of data appears on the data lines 8 bit-clock periods (for 24-bit data) after LRCLK toggles. In RJ mode, the LSB of data is always clocked by the last bit clock before LRCLK transitions. The data is written MSB-first and is valid on the rising edge of the bit clock. The DAP masks unused leading data-bit positions.

2-Channel Right-Justified (Sony Format) Stereo Input

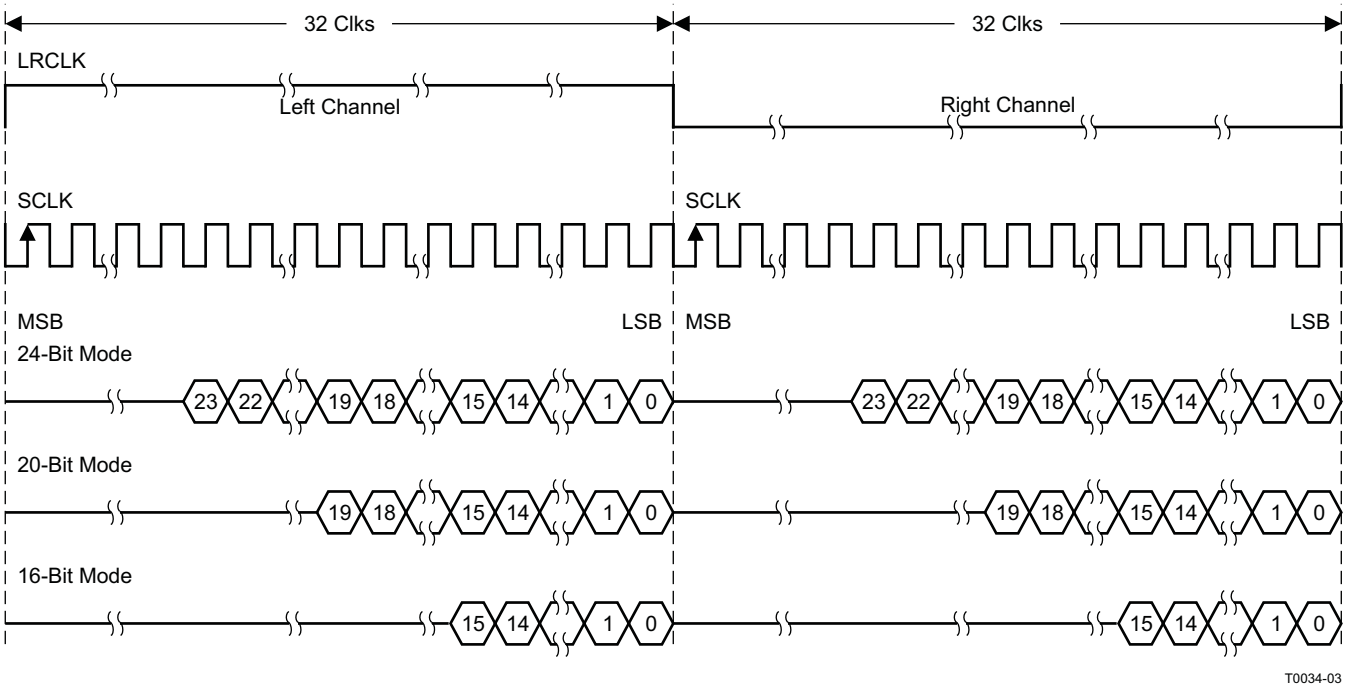

Figure 36. Right-Justified 64-f_S Format

2-Channel Right-Justified Stereo Input (24-Bit Transfer Word Size)

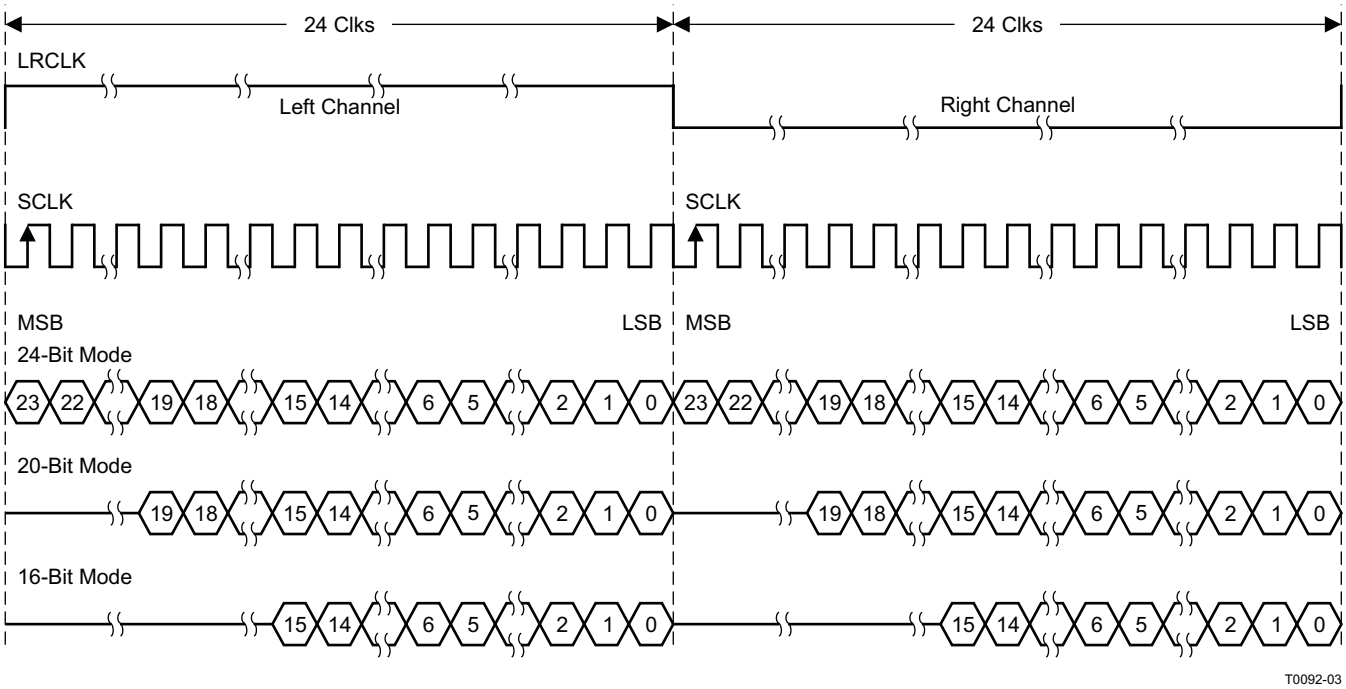

Figure 37. Right-Justified 48-f_S Format

2-Channel Right-Justified (Sony Format) Stereo Input

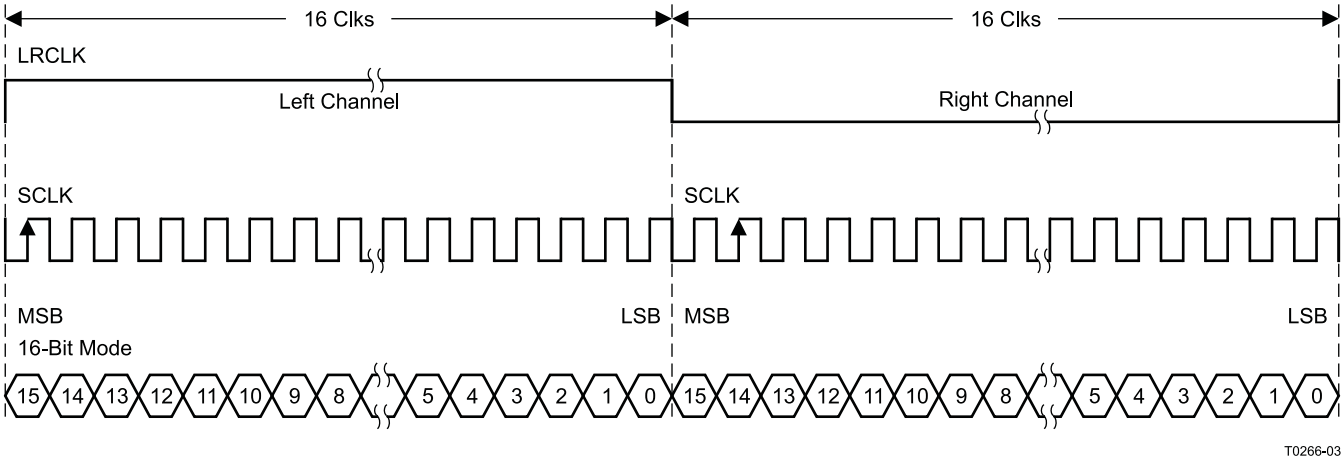

Figure 38. Right-Justified 32-f_S Format

Copyright © 2009, Texas Instruments Incorporated

I²C SERIAL CONTROL INTERFACE

The TAS5716 DAP has a bidirectional I²C interface that compatible with the I²C (Inter IC) bus protocol and supports both 100-kHz and 400-kHz data transfer rates for single- and multiple-byte write and read operations. This is a slave-only device that does not support a multimaster bus environment or wait-state insertion. The control interface is used to program the registers of the device and to read device status.

The DAP supports the standard-mode I²C bus operation (100 kHz maximum) and the fast I²C bus operation (400 kHz maximum). The DAP performs all I²C operations without I²C wait cycles.

General I²C Operation

The I²C bus employs two signals; SDA (data) and SCL (clock), to communicate between integrated circuits in a system. Data is transferred on the bus serially, one bit at a time. The address and data can be transferred in byte (8-bit) format, with the most-significant bit (MSB) transferred first. In addition, each byte transferred on the bus is acknowledged by the receiving device with an acknowledge bit. Each transfer operation begins with the master device driving a start condition on the bus and ends with the master device driving a stop condition on the bus. The bus uses transitions on the data terminal (SDA) while the clock is high to indicate start and stop conditions. A high-to-low transition on SDA indicates a start, and a low-to-high transition indicates a stop. Normal data-bit transitions must occur within the low time of the clock period. These conditions are shown in Figure 39. The master generates the 7-bit slave address and the read/write (R/$\overline{W}$) bit to open communication with another device and then waits for an acknowledge condition. The TAS5716 holds SDA low during the acknowledge clock period to indicate an acknowledgment. When this occurs, the master transmits the next byte of the sequence. Each device is addressed by a unique 7-bit slave address plus R/$\overline{W}$ bit (1 byte). All compatible devices share the same signals via a bidirectional bus using a wired-AND connection. An external pullup resistor must be used for the SDA and SCL signals to set the high level for the bus.

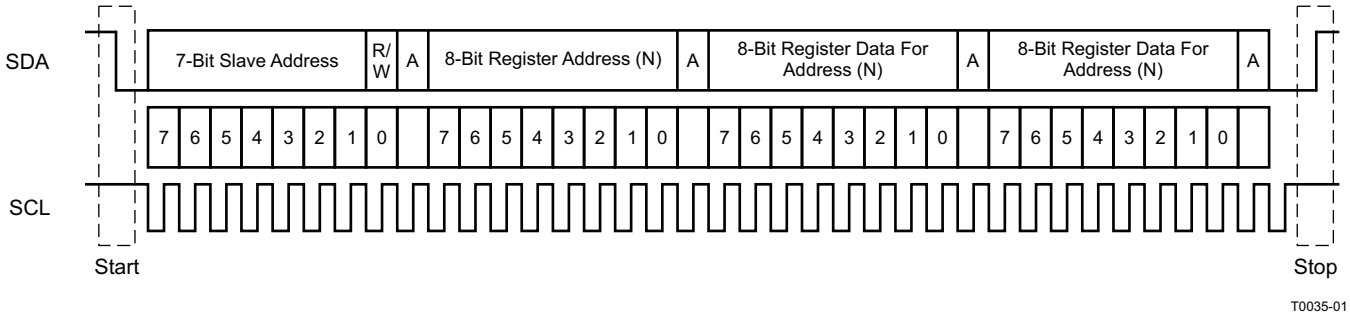

Figure 39. Typical I²C Sequence

There is no limit on the number of bytes that can be transmitted between start and stop conditions. When the last word transfers, the master generates a stop condition to release the bus. A generic data-transfer sequence is shown in Figure 39.

The 7-bit address for the TAS5716 is 0011 011 (0x36).

Single- and Multiple-Byte Transfers

The serial-control interface supports both single-byte and multiple-byte read/write operations for status registers and the general control registers associated with the PWM. However, for the DAP data processing registers, the serial-control interface supports only multiple-byte (4-byte) read/write operations.

During multiple-byte read operations, the DAP responds with data, a byte at a time, starting at the subaddress assigned, as long as the master device continues to respond with acknowledges. If a particular subaddress does not contain 32 bits, the unused bits are read as logic 0.

During multiple-byte write operations, the DAP compares the number of bytes transmitted to the number of bytes that are required for each specific subaddress. If a write command is received for a biquad subaddress, the DAP expects to receive five 32-bit words. If fewer than five 32-bit data words have been received when a stop command (or another start command) is received, the data received is discarded. Similarly, if a write command is received for a mixer coefficient, the DAP expects to receive one 32-bit word.

Copyright © 2009, Texas Instruments Incorporated

Supplying a subaddress for each subaddress transaction is referred to as random I^{2}C addressing. The TAS5716 also supports sequential I^{2}C addressing. For write transactions, if a subaddress is issued followed by data for that subaddress and the 15 subaddresses that follow, a sequential I^{2}C write transaction has taken place, and the data for all 16 subaddresses is successfully received by the TAS5716. For I^{2}C sequential write transactions, the subaddress then serves as the start address, and the amount of data subsequently transmitted, before a stop or start is transmitted, determines how many subaddresses are written. As was true for random addressing, sequential addressing requires that a complete set of data be transmitted. If only a partial set of data is written to the last subaddress, the data for the last subaddress is discarded. However, all other data written is accepted; only the incomplete data is discarded.

Single-Byte Write

As shown in Figure 40, a single-byte data-write transfer begins with the master device transmitting a start condition followed by the I^{2}C device address and the read/write bit. The read/write bit determines the direction of the data transfer. For a write-data transfer, the read/write bit is 0. After receiving the correct I^{2}C device address and the read/write bit, the DAP responds with an acknowledge bit. Next, the master transmits the address byte or bytes corresponding to the TAS5716 internal memory address being accessed. After receiving the address byte, the TAS5716 again responds with an acknowledge bit. Next, the master device transmits the data byte to be written to the memory address being accessed. After receiving the data byte, the TAS5716 again responds with an acknowledge bit. Finally, the master device transmits a stop condition to complete the single-byte data-write transfer.

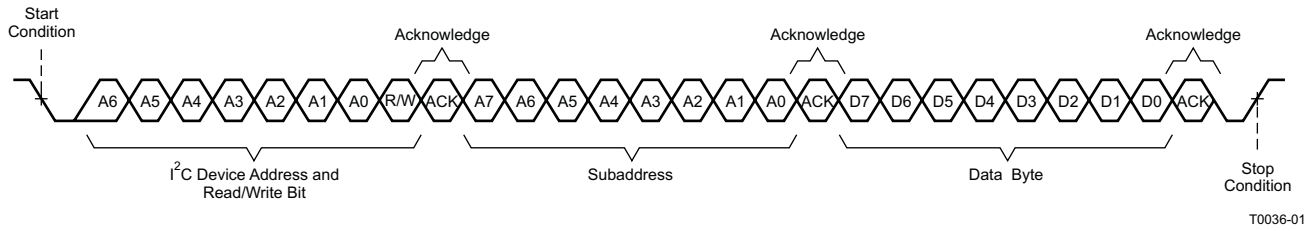

Figure 40. Single-Byte Write Transfer

Multiple-Byte Write

A multiple-byte data-write transfer is identical to a single-byte data-write transfer except that multiple data bytes are transmitted by the master device to the DAP as shown in Figure 41. After receiving each data byte, the TAS5716 responds with an acknowledge bit.

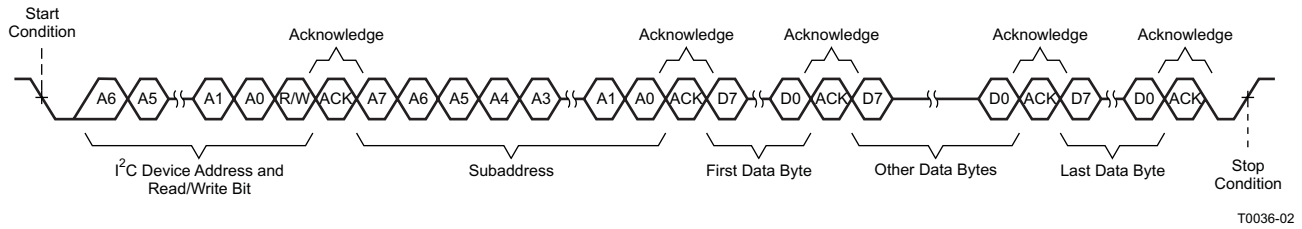

Figure 41. Multiple-Byte Write Transfer

Copyright © 2009, Texas Instruments Incorporated

Single-Byte Read

As shown in Figure 42, a single-byte data-read transfer begins with the master device transmitting a start condition followed by the I^{2}C device address and the read/write bit. For the data-read transfer, both a write followed by a read are actually done. Initially, a write is done to transfer the address byte or bytes of the internal memory address to be read. As a result, the read/write bit becomes a 0. After receiving the TAS5716 address and the read/write bit, TAS5716 responds with an acknowledge bit. In addition, after sending the internal memory address byte or bytes, the master device transmits another start condition followed by the TAS5716 address and the read/write bit again. This time the read/write bit becomes a 1, indicating a read transfer. After receiving the address and the read/write bit, the TAS5716 again responds with an acknowledge bit. Next, the TAS5716 transmits the data byte from the memory address being read. After receiving the data byte, the master device transmits a not-acknowledge followed by a stop condition to complete the single-byte data-read transfer.

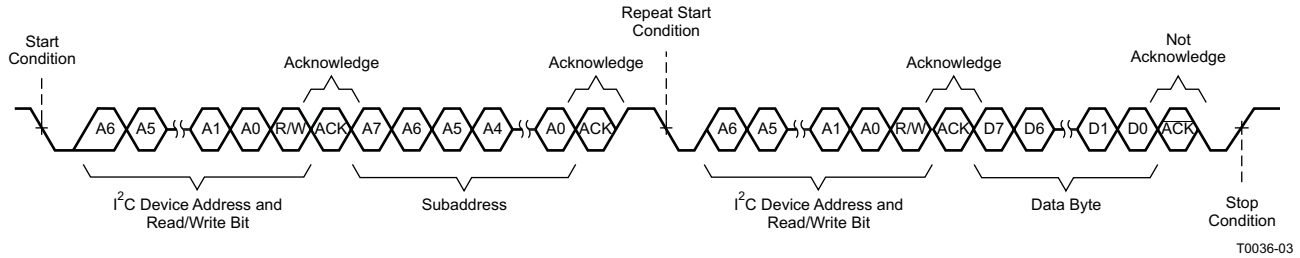

Figure 42. Single-Byte Read Transfer

Multiple-Byte Read

A multiple-byte data read transfer is identical to a single-byte data-read transfer except that multiple data bytes are transmitted by the TAS5716 to the master device as shown in Figure 43. Except for the last data byte, the master device responds with an acknowledge bit after receiving each data byte.

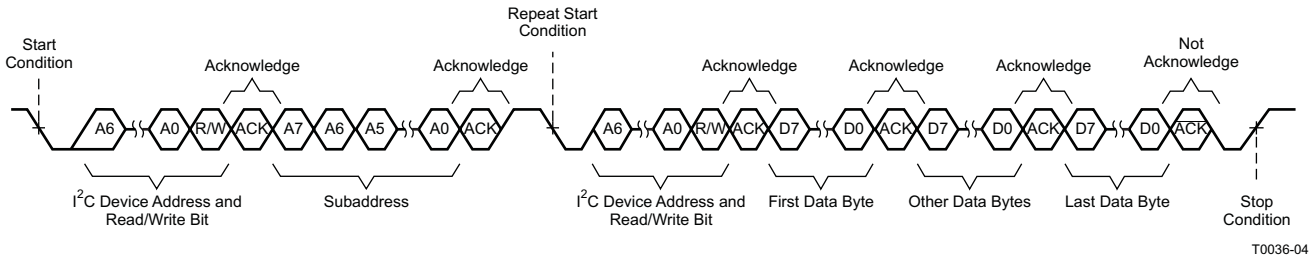

Figure 43. Multiple-Byte Read Transfer

Dynamic Range Control (DRC)

The DRC scheme has a single threshold, offset, and slope (all programmable). There is one ganged DRC for the left/right channels and one DRC for the subwoofer channel.

The DRC input/output diagram is shown in Figure 44.

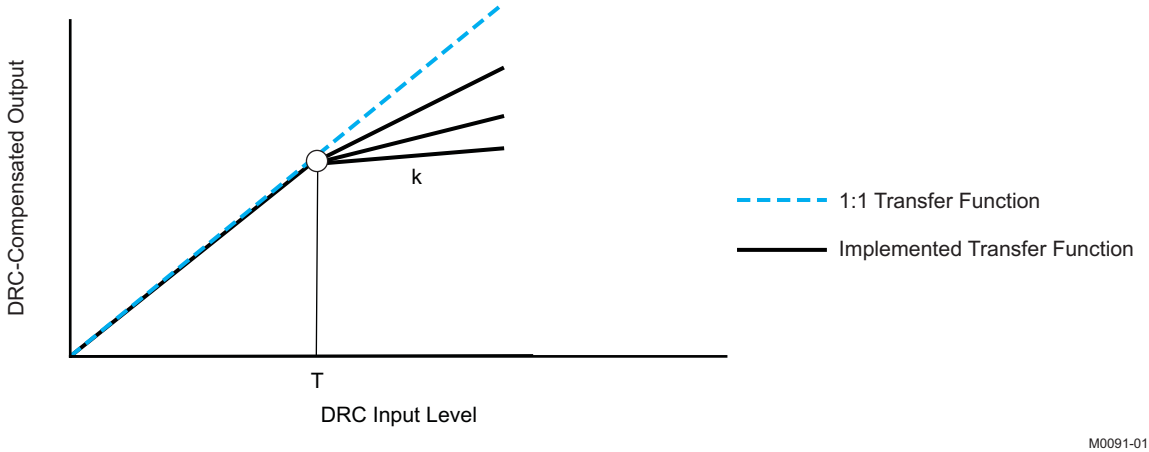

Professional-quality dynamic range compression automatically adjusts volume to flatten volume level.

- One DRC for left/right and one DRC for subwoofer
- Each DRC has adjustable threshold, offset, and compression levels
- Programmable energy, attack, and decay time constants
- *Transparent compression*: compressors can attack fast enough to avoid apparent clipping before engaging, and decay times can be set slow enough to avoid pumping.

Figure 44. Dynamic Range Control

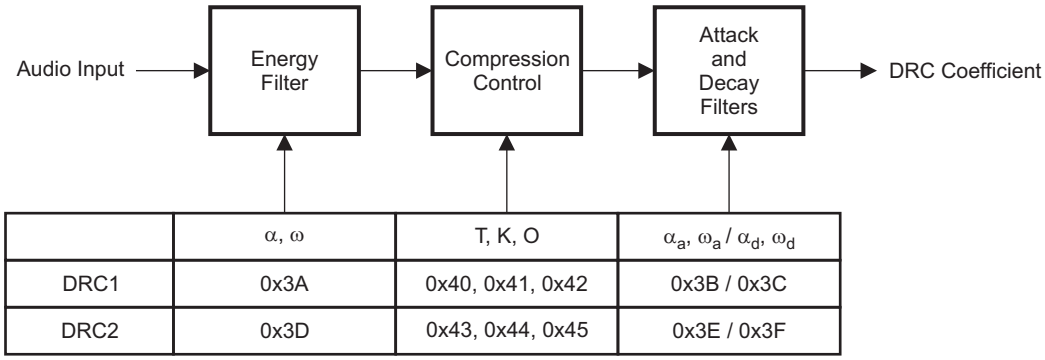

	α, ω	T, K, O	α_a, ω_a / α_d, ω_d
DRC1	0x3A	0x40, 0x41, 0x42	0x3B / 0x3C
DRC2	0x3D	0x43, 0x44, 0x45	0x3E / 0x3F

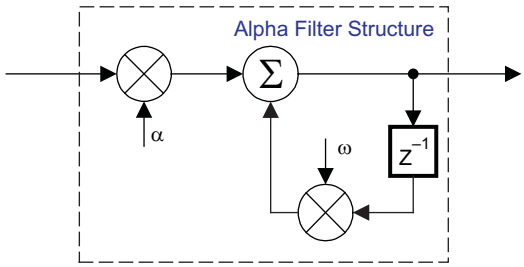

NOTE:
$\alpha = a$
$\omega = 1 - a$

Figure 45. DRC Structure

Copyright © 2009, Texas Instruments Incorporated

Loudness Function

The TAS5716 provides a direct form-I biquad for loudness on the subwoofer channel. The first biquad is contained in a gain-compensation circuit that maintains the overall system gain at 1 or less to prevent clipping at loud volume settings. This gain compensation is shown in Figure 46

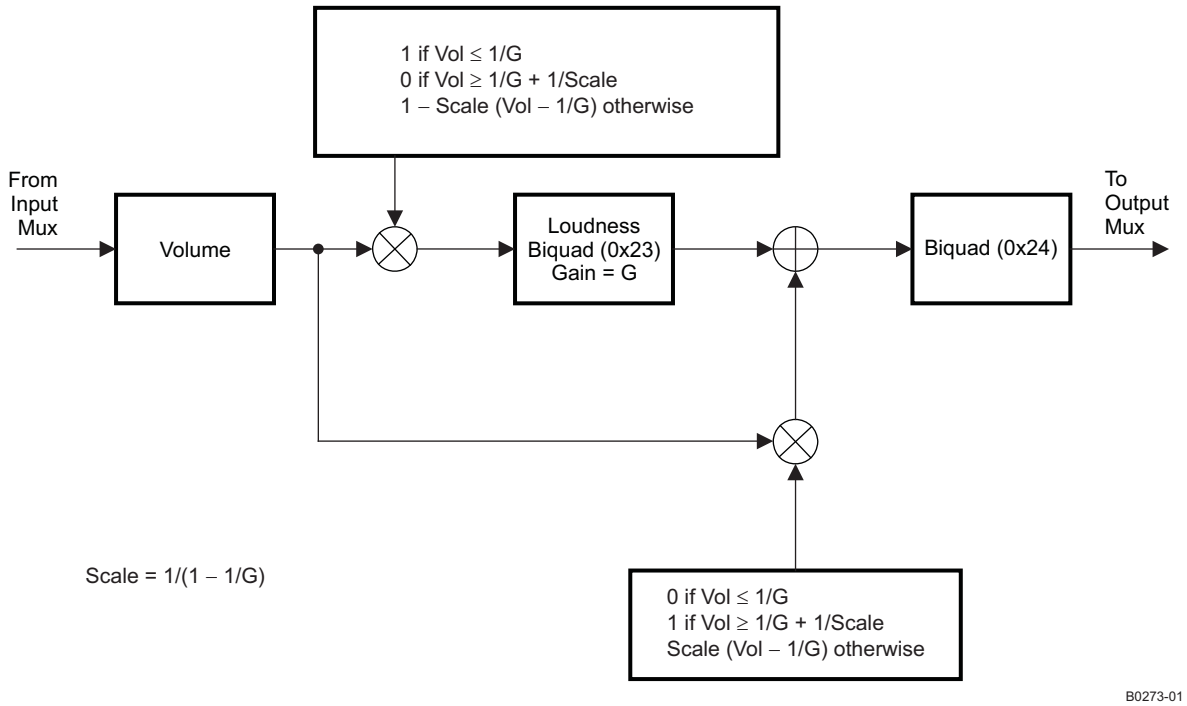

Figure 46. Biquad Gain-Control Structure

Table 1. Loudness Table Example for Gain = 4, 1/G = 0.25, Scale = 1.33

Volume	0.125	0.25	0.375	0.5	0.625	0.75	0.875	1	1.125	1.25	1.375	1.5	1.625	1.75	1.875	2
Biquad path	1	1	0.833	0.666	0.5	0.333	0.166	0	0	0	0	0	0	0	0	0
Direct path	0	0	0.166	0.333	0.5	0.666	0.833	1	1	1	1	1	1	1	1	1
Total gain	1	1	1	1	1	1	1	1	1	1	1	1	1	1	1	1

The biquads are implemented in a direct form-I architecture. The direct form-I structure provides a separate delay element and mixer (gain coefficient) for each node in the biquad filter.

The five 26-bit (3.23) coefficients for the biquad are programmable via the I^2C interface.

The following steps are involved in using a loudness biquad with the volume compensation feature:

1. Program the biquad with a loudness filter.
2. Program 0x26 (1/G) and 0x28 (scale).
3. Enable volume compensation in register 0x0E.

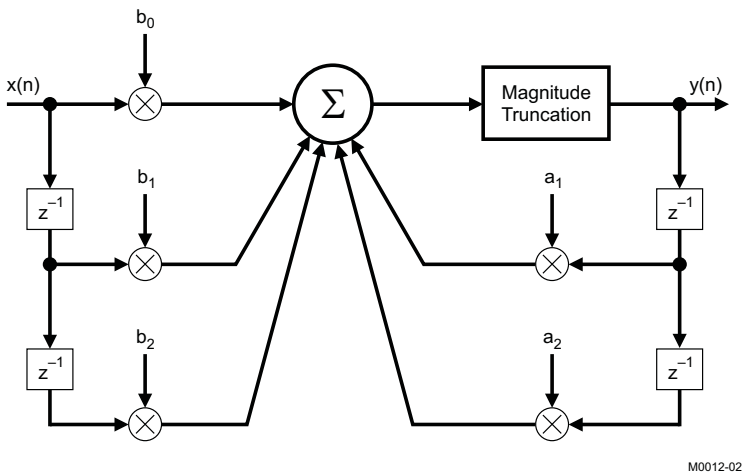

Figure 47. Biquad Filter

BANK SWITCHING

The TAS5716 uses an approach called *bank switching* together with automatic sample-rate detection. All processing features that must be changed for different sample rates are stored internally in the TAS5716. The TAS5716 has three full banks storing information, one for 32 kHz, one for 44.1/48 kHz, and one for all other data rates. Combined with the clock-rate autodetection feature, bank switching allows the TAS5716 to detect automatically a change in the input sample rate and switch to the appropriate bank without any MCU intervention.

The TAS5716 supports three banks of coefficients to be updated during the initialization. One bank is for 32 kHz, a second bank is for 44.1/48 kHz, and a third bank is for all other sample rates. An external controller updates the three banks (see the I^2C register mapping table for bankable locations) during the initialization sequence.

If the autobank switch is enabled (register 0x50, bits 2:0), then the TAS5716 automatically swaps the coefficients for subsequent sample rate changes, avoiding the need for any external controller intervention for a sample rate change.

By default, bits 2:0 have the value 000; that means the bank switch is disabled. In that state, any update to locations 0x29–0x3F goes into the DAP. A write to register 0x50 with bits 2:0 being 001, 010, or 011 brings the system into the coefficient-bank-update state *update bank1*, *update bank2,* or *update bank3*, respectively. Any subsequent write to locations 0x29–0x3F updates the coefficient banks stored outside the DAP. After updating all the three banks, the system controller should issue a write to register 0x50 with bits 2:0 being 100; this changes the system state to automatic bank update. In automatic bank update, the TAS5716 automatically swaps banks based on the sample rate.

In the headphone mode, speaker equalization and DRC are disabled, and they are restored on returning to the speaker mode.

Command sequences for initialization can be summarized as follows:

1. **Enable factory trim for internal oscillator:** Write to register 0x1B with a value 0x00.
2. **Update coefficients:** Coefficients can be loaded into DAP RAM using the manual bank mode.

   OR

   Use automatic bank mode.
   a. Enable bank-1 mode: Write to register 0x50 with 0x01. Load the 32-kHz coefficients. TI ALE can generate coefficients.
   b. Enable bank-2 mode: Write to register 0x50 with 0x02. Load the 48-kHz coefficients.
   c. Enable bank-3 mode: Write to register 0x50 with 0x03. Load the other coefficients.
   d. Enable automatic bank switching by writing to register 0x50 with 0x04.
3. **Bring the system out of all-channel shutdown:** Write 0 to bit 6 of register 0x05.
4. **Issue master volume:** Write to register 0x07 with the volume value (0 db = 0x30).

Copyright © 2009, Texas Instruments Incorporated

APPLICATION INFORMATION

Recovery From Error

Protection Mechanisms in the TAS5716

- SCP (short-circuit protection, OCP) protects against shorts across the load, to GND, and to PVCC.
- OTP turns off the device if T_{die} (typical) > 150°C.
- UVP turns off the device if PVCC (typical) < 8.4 V
- OVP turns off the device if PVCC (typical) > 27.5 V

A short-circuit condition can be detected also by an external controller. The SCP error from the external power stage is also fed into TAS5716. The VALID pin goes low in the event of a short circuit. The VALID pin can be monitored by an external microcontroller. The TAS5716 initiates a back-end error sequence by itself to recover from the error, which involves settling VALID low for a programmable amount of time and then retrying to check whether the SCP condition still exists.

- OTP turns the device back on when T_{die} (typical) < 135°C.
- UVP turns the device back on if PVCC (typical) is > 8.5 V.
- OVP turns the device back on if PVCC (typical) is < 27.2 V.

Interchannel Delay (ICD) Settings

Recommended ICD Settings

Mode	Description	ICD1	ICD2	ICD3	ICD4	ICD5	ICD6
2.0 ch BD BTL	2 BTL channels, internal power stage only, BD mode	A(L+) = 19 (0x4C)	C(R+) = 13 (0x34)	B(L–) = 7 (0x1C)	D(R–) = 25 (0x64)	SM(S–) = –12 (0xD0)	SP(S+) = –28 (0x90)
2.1 ch AD BTL	2 internal BTL channels, 1 external BTL channel using PBTL TAS5601, AD mode	A(L+) = 23 (0x5C)	C(R+) = 9 (0x24)	B(L–) = 21 (0x54)	D(R–) = 11 (0x2C)	SM(S–) = –23 (0xA4)	SP(S+) = –21 (0xAC)
2.1 ch AD SE	2 internal SE channels (2 unused), 1 external BTL channel using PBTL TAS5601, AD mode	A(L+) = 15 (0x3C)	B(R–) = –15 (0xC4)	B(0) = 0 (0x00)	D(0) = 0 (0x00)	SM(S–) = –30 (0x88)	SP(S+) = –32 (0x80)
2.1 ch BD BTL	2 internal BTL channels, 1 external BTL channel using PBTL TAS5601, BD mode	A(L+) = 19 (0x4C)	C(R+) = 13 (0x34)	B(L–) = 7 (0x1C)	D(R–) = 25 (0x64)	SM(S–) = –12 (0xD0)	SP(S+) = –28 (0x90)
3.0 ch AD 2SE + 1 BTL	2 internal SE channels + 1 internal BTL channel, AD mode	A(L+) = 15 (0x3C)	B(R–) = –16 (0xC0)	SM(0) = 0 (0x00)	SP(0) = 0 (0x00)	D(S–) = 0 (0x00)	C(S+) = 2 (0x08)
4.0 ch AD SE	4 internal SE channels	A(L1+) = 8 (=0x20)	B(R1–) = –24 (0xA0)	C(L2+) = –8 (0xE0)	D(R2–) = 24 (0x60)	SM(0) = 1 (0x04)	SP(0) = –1 (0xFC)
4.1 ch AD SE	4 internal SE channels + 1 external BTL channel, using PBTL TAS5601, AD mode.	A(L1+) = 8 (0x20)	B(R1–) = –24 (0xA0)	C(L2+) = –8 (xE0)	D(R2–)= 24 (0x60)	SM(S–) = 1 (0x04)	SP(S+) = –1 (0xFC)

Copyright © 2009, Texas Instruments Incorporated

Calculation of Output Signal Level of TAS5716 Feedback Power Stage (Gain Is Independent of PVCC)

The gain of the TAS5716 is the total digital gain of the controller multiplied by the gain of the power stage.

For a half-bridge channel of the TAS5716 power stage, the gain is simply:

Power stage gain = 13 × V_{RMS} / modulation level

Modulation level = fraction of full-scale modulation of the PWM signal at the input of the power stage

V_{RMS} = Audio voltage level at the output of the power stage = 13 × modulation level

For the TAS5716 controller, the gain is the programmed digital gain multiplied by a scaling factor, called the *maximum modulation level*. The maximum modulation level is derived from the modulation limit programmed in the controller, which limits duty cycle to a set number of percent above 0% and below 100%. Setting the modulation limit to 97.7% (default) limits the duty cycle between 2.3% and 97.7%.

Controller gain = digital gain × maximum modulation level × (modulation level/digital FFS)

Digital FFS = digital input fraction of full scale

Modulation limit = 97.7%

Maximum modulation level = 2 × modulation limit – 1 = 0.954

The output signal level of the TAS5716 can now be calculated.

V_{RMS} = digital FFS × digital gain × maximum modulation level × 13

With the modulation limit set at the default level of 97.7%, this becomes:

V_{RMS} = digital FFS × digital gain × 12.4	(Single-ended)
V_{RMS} = digital FFS × digital gain × 24.8	(BTL)

Example: Input = –20 dbFS; volume = 0 dB; biquads = ALL PASS; modulation index = 97.7%; mode = BTL

Output V_{RMS} = 24.8 × 0.1 × 1 = 2.48 V

I²C SERIAL-CONTROL COMMAND CHARACTERISTICS

The DAP has two groups of I²C commands. One set is commands that are designed specifically to be operated while audio is streaming and that have built-in mechanisms to prevent noise, clicks, and pops. The other set does not have this built-in protection.

Commands that are designed to be adjusted while audio is streaming:

- Master volume
- Master mute
- Individual channel volume
- Individual channel mute

Commands that are normally issued as part of initialization:

- Serial-data interface format
- De-emphasis
- Sample-rate conversion
- Input multiplexer
- Output multiplexer
- Biquads
- Channel-6 multiplexer-2
- Channel delay
- Enable/disable dc blocking
- Hard/soft unmute from clock error
- Enable/disable headphone outputs

Start-up sequence for correct device operation

This sequence must be followed to ensure proper operation.

Copyright © 2009, Texas Instruments Incorporated

1. Hold ALL logic inputs low. Power up AVDD/DVDD and wait for the inputs to settle in the allowed range.
2. Drive $\overline{\text{PDN}}$ = 1, $\overline{\text{MUTE}}$ = 1, and drive other logic inputs to the desired state.
3. Provide a stable MCLK, LRCLK, and SCLK (clock errors must be avoided during the initialization sequence) .
4. After completing step 3, wait 100 µs, then drive $\overline{\text{RESET}}$ = 1, and wait 13.5 ms after $\overline{\text{RESET}}$ goes high.
5. Trim the internal oscillator (write 0x00 to register 0x1B).
6. Wait 50 ms while the part acquires lock.
7. Configure the DAP via I^2C, e.g.:
   – Downmix control (0x21)
   – Biquads (0x23–0x24 and 0x29–0x38)
   – DRC parameters and controls (0x3A–0x46)
   – Bank select (0x50)

   NOTE: User may not issue any I^2C reads or writes to the above registers after this step is complete.
8. Configure remaining I^2C registers, e.g.:
   – Shutdown group
   – De-emphasis
   – Input multiplexers
   – Output multiplexers
   – Channel delays
   – DC blocking
   – Hard/soft unmute from clock error
   – Serial data interface format
   – Clock register (manual clock mode only)

   NOTE: The BKND_ERR register (0x1C) can only be written once with a value that is not reserved (00 and 01 are reserved values).
9. Exit all-channel shutdown (write 0 to bit 6 of register 0x05).
10. This completes the initialization sequence. From this step on, no further constraints are imposed on $\overline{\text{PDN}}$, $\overline{\text{MUTE}}$, and clocks.
11. During normal operation the user may do the following:
    a. Write to the master or individual-channel volume registers.
    b. Write to the soft-mute register.
    c. Write to the clock and serial-data interface-format registers (in manual clock mode only).
    d. Write to bit 6 of register 0x05 to enter/exit all-channel shutdown. No other bits of register 0x05 may be altered. After issuing the all-channel shutdown command, no further I^2C transactions that address this device are allowed for a period of at least: 1 ms + 1.3 × (period specified in start/stop register 0x1A) .
    e. $\overline{\text{PDN}}$ may be asserted (low) at any time. Once $\overline{\text{PDN}}$ is asserted, no I^2C transactions that address this device may be issued until $\overline{\text{PDN}}$ has been deasserted and the part has returned to active mode.

    NOTE: When the device is in a power-down state (initiated via $\overline{\text{PDN}}$), the part is not reset if $\overline{\text{RESET}}$ is asserted.

    NOTE: Once $\overline{\text{RESET}}$ is asserted, and as long as the part is in a reset state, the part does not power down if $\overline{\text{PDN}}$ is asserted. For powering the part down, a negative edge on $\overline{\text{PDN}}$ must be issued when $\overline{\text{RESET}}$ is high and the part is not in a reset state.

    NOTE: No registers besides those explicitly listed in Steps a.–d. should be altered during normal operation (i.e., after exiting all-channel shutdown).

    NOTE: No registers should be read during normal operation (i.e., after exiting all-channel shutdown) .
12. To reconfigure registers:
    a. Return to all-channel shutdown (observe the shutdown wait time as specified in Step 11.d.).
    b. Drive $\overline{\text{PDN}}$ = 1, and hold $\overline{\text{MUTE}}$ stable.
    c. Provide a stable MCLK, LRCLK, and SCLK.
    d. Repeat configuration starting from step (6).

Copyright © 2009, Texas Instruments Incorporated

Writing of Input Mixers

Writing of input mixers must follow the guidelines on updating DAP coefficients.

The sequence for writing of input mixers, which are internal coefficients, is as follows:

1. Enable input mixer write. Write to register 0xF8: A5 A5 A5 A5 {4 bytes}.
2. Write to input mixer address register 0xF9: 00 00 00 ADDR {4 bytes} (where ADDR = 0x96, 0x99, 0xAA, or 0xA9).
3. Write the mixer value (3.23 format) to 0xFA: {zeros[37:0], mixer_value[25:0]} {total 8 bytes}.

The MSBs (38 bits) are zeros and LSBs (26 bits) comprise the mixer value in 3.23 format.

Sample Calculation for 3.23 Format

db	Linear	Decimal	Hex (3.23 Format)
0	1	8,388,608	0080 0000
5	1.7782794	14,917,288	00E3 9EA8
–5	0.5623413	4,717,260	0047 FACC
X	$L = 10^{(X/20)}$	D = 8,388,608 × L	H = dec2hex (D, 8)

Table 2. Serial Control Interface Register Summary(1)

SUBADDRESS	REGISTER NAME	NO. OF BYTES	CONTENTS	INITIALIZATION VALUE
			A u indicates unused bits.	
0x00	Clock control register	1	Description shown in subsequent section	0x6C
0x01	Device ID register	1	Description shown in subsequent section	0x28
0x02	Error status register	1	Description shown in subsequent section	0x00
0x03	System control register 1	1	Description shown in subsequent section	0xA0
0x04	Serial-data interface register	1	Description shown in subsequent section	0x05
0x05	System-control register 2	1	Description shown in subsequent section	0x40
0x06	Soft-mute register	1	Description shown in subsequent section	0x00
0x07	Master volume	1	Description shown in subsequent section	0xFF (mute)
0x08	Channel 1 vol	1	Description shown in subsequent section	0x30 (0 dB)
0x09	Channel 2 vol	1	Description shown in subsequent section	0x30 (0 dB)
0x0A	Channel 3 vol	1	Description shown in subsequent section	0x30 (0 dB)
0x0B	Channel 4 vol	1	Description shown in subsequent section	0x30 (0 dB)
0x0C	HP volume	1	Description shown in subsequent section	0x30 (0 dB)
0x0D	Channel-6 vol	1	Description shown in subsequent section	0x30 (0 dB)
0x0E	Volume configuration register	1	Description shown in subsequent section	0x91
0x0F		1	Reserved(2)	
0x10	Modulation-limit register	1	Description shown in subsequent section	0x02
0x11	IC delay channel 1	1	Description shown in subsequent section	0x4C
0x12	IC delay channel 2	1	Description shown in subsequent section	0x34
0x13	IC delay channel 3	1	Description shown in subsequent section	0x1C
0x14	IC delay channel 4	1	Description shown in subsequent section	0x64
0x15	IC delay channel 5	1	Description shown in subsequent section	0xB0
0x16	IC delay channel 6	1	Description shown in subsequent section	0x90
0x17	Offset register	1	Reserved	0x00
0x18		1	Reserved(2)	

(1) Biquad definition is given in Figure 47.
(2) Reserved registers should not be accessed.

Copyright © 2009, Texas Instruments Incorporated

Table 2. Serial Control Interface Register Summary (continued)

SUBADDRESS	REGISTER NAME	NO. OF BYTES	CONTENTS	INITIALIZATION VALUE
0x19	PWM shutdown group register	1		0x30
0x1A	Start/stop period register	1		0x0A
0x1B	Oscillator trim register	1		0x82
0x1C	BKND_ERR register	1		0x02
0x1D–0x1F			Reserved (2)	
0x20	Input MUX register	4	Description shown in subsequent section	0x0089 777A
0x21	Ch-6 input mux-2 register	4	Description shown in subsequent section	0x0000 4203
0x22	AM tuned frequency	4	Description shown in subsequent section	0x0000 0000
0x23	ch6_bq[2] (loudness BQ)	20	u[31:26], b0[25:0]	0x0080 0000
			u[31:26], b1[25:0]	0x0000 0000
			u[31:26], b2[25:0]	0x0000 0000
			u[31:26], a1[25:0]	0x0000 0000
			u[31:26], a2[25:0]	0x0000 0000
0x24	ch6_bq[3] (post volume BQ)	20	u[31:26], b0[25:0]	0x0080 0000
			u[31:26], b1[25:0]	0x0000 0000
			u[31:26], b2[25:0]	0x0000 0000
			u[31:26], a1[25:0]	0x0000 0000
			u[31:26], a2[25:0]	0x0000 0000
0x25	PWM MUX register		Description shown in subsequent section	0x0102 1345
0x26	1/G register	4	u[31:26], x[25:0]	0x0080 0000
0x27		1	Reserved (3)	
0x28	Scale register	4	u[31:26], x[25:0]	0x0080 0000
0x29	ch1_bq[0]	20	u[31:26], b0[25:0]	0x0080 0000
			u[31:26], b1[25:0]	0x0000 0000
			u[31:26], b2[25:0]	0x0000 0000
			u[31:26], a1[25:0]	0x0000 0000
			u[31:26], a2[25:0]	0x0000 0000
0x2A	ch1_bq[1]	20	u[31:26], b0[25:0]	0x0080 0000
			u[31:26], b1[25:0]	0x0000 0000
			u[31:26], b2[25:0]	0x0000 0000
			u[31:26], a1[25:0]	0x0000 0000
			u[31:26], a2[25:0]	0x0000 0000
0x2B	ch1_bq[2]	20	u[31:26], b0[25:0]	0x0080 0000
			u[31:26], b1[25:0]	0x0000 0000
			u[31:26], b2[25:0]	0x0000 0000
			u[31:26], a1[25:0]	0x0000 0000
			u[31:26], a2[25:0]	0x0000 0000
0x2C	ch1_bq[3]	20	u[31:26], b0[25:0]	0x0080 0000
			u[31:26], b1[25:0]	0x0000 0000
			u[31:26], b2[25:0]	0x0000 0000
			u[31:26], a1[25:0]	0x0000 0000
			u[31:26], a2[25:0]	0x0000 0000

(3) Reserved registers should not be accessed.

Table 2. Serial Control Interface Register Summary (continued)

SUBADDRESS	REGISTER NAME	NO. OF BYTES	CONTENTS	INITIALIZATION VALUE
0x2D	ch1_bq[4]	20	u[31:26], b0[25:0]	0x0080 0000
			u[31:26], b1[25:0]	0x0000 0000
			u[31:26], b2[25:0]	0x0000 0000
			u[31:26], a1[25:0]	0x0000 0000
			u[31:26], a2[25:0]	0x0000 0000
0x2E	ch1_bq[5]	20	u[31:26], b0[25:0]	0x0080 0000
			u[31:26], b1[25:0]	0x0000 0000
			u[31:26], b2[25:0]	0x0000 0000
			u[31:26], a1[25:0]	0x0000 0000
			u[31:26], a2[25:0]	0x0000 0000
0x2F	ch1_bq[6]	20	u[31:26], b0[25:0]	0x0080 0000
			u[31:26], b1[25:0]	0x0000 0000
			u[31:26], b2[25:0]	0x0000 0000
			u[31:26], a1[25:0]	0x0000 0000
			u[31:26], a2[25:0]	0x0000 0000
0x30	ch2_bq[0]	20	u[31:26], b0[25:0]	0x0080 0000
			u[31:26], b1[25:0]	0x0000 0000
			u[31:26], b2[25:0]	0x0000 0000
			u[31:26], a1[25:0]	0x0000 0000
			u[31:26], a2[25:0]	0x0000 0000
0x31	ch2_bq[1]	20	u[31:26], b0[25:0]	0x0080 0000
			u[31:26], b1[25:0]	0x0000 0000
			u[31:26], b2[25:0]	0x0000 0000
			u[31:26], a1[25:0]	0x0000 0000
			u[31:26], a2[25:0]	0x0000 0000
0x32	ch2_bq[2]	20	u[31:26], b0[25:0]	0x0080 0000
			u[31:26], b1[25:0]	0x0000 0000
			u[31:26], b2[25:0]	0x0000 0000
			u[31:26], a1[25:0]	0x0000 0000
			u[31:26], a2[25:0]	0x0000 0000
0x33	ch2_bq[3]	20	u[31:26], b0[25:0]	0x0080 0000
			u[31:26], b1[25:0]	0x0000 0000
			u[31:26], b2[25:0]	0x0000 0000
			u[31:26], a1[25:0]	0x0000 0000
			u[31:26], a2[25:0]	0x0000 0000
0x34	ch2_bq[4]	20	u[31:26], b0[25:0]	0x0080 0000
			u[31:26], b1[25:0]	0x0000 0000
			u[31:26], b2[25:0]	0x0000 0000
			u[31:26], a1[25:0]	0x0000 0000
			u[31:26], a2[25:0]	0x0000 0000
0x35	ch2_bq[5]	20	u[31:26], b0[25:0]	0x0080 0000
			u[31:26], b1[25:0]	0x0000 0000
			u[31:26], b2[25:0]	0x0000 0000
			u[31:26], a1[25:0]	0x0000 0000
			u[31:26], a2[25:0]	0x0000 0000

Copyright © 2009, Texas Instruments Incorporated

Table 2. Serial Control Interface Register Summary (continued)

SUBADDRESS	REGISTER NAME	NO. OF BYTES	CONTENTS	INITIALIZATION VALUE
0x36	ch2_bq[6]	20	u[31:26], b0[25:0]	0x0080 0000
			u[31:26], b1[25:0]	0x0000 0000
			u[31:26], b2[25:0]	0x0000 0000
			u[31:26], a1[25:0]	0x0000 0000
			u[31:26], a2[25:0]	0x0000 0000
0x37	ch6_bq[0]	20	u[31:26], b0[25:0]	0x0080 0000
			u[31:26], b1[25:0]	0x0000 0000
			u[31:26], b2[25:0]	0x0000 0000
			u[31:26], a1[25:0]	0x0000 0000
			u[31:26], a2[25:0]	0x0000 0000
0x38	ch6_bq[1]	20	u[31:26], b0[25:0]	0x0080 0000
			u[31:26], b1[25:0]	0x0000 0000
			u[31:26], b2[25:0]	0x0000 0000
			u[31:26], a1[25:0]	0x0000 0000
			u[31:26], a2[25:0]	0x0000 0000
0x39		4	Reserved(4)	
0x3A	DRC1 ae	8	u[31:26], ae[25:0]	0x0080 0000
	DRC1 (1 – ae)		u[31:26], (1 – ae)[25:0]	0x0000 0000
0x3B	DRC1 aa	8	u[31:26], aa[25:0]	0x0080 0000
	DRC1 (1 – aa)		u[31:26], (1 – aa)[25:0]	0x0000 0000
0x3C	DRC1 ad	8	u[31:26], ad[25:0]	0x0080 0000
	DRC1 (1 – ad)		u[31:26], (1 – ad)[25:0]	0x0000 0000
0x3D	DRC2 ae	8	u[31:26], ae[25:0]	0x0080 0000
	DRC 2 (1 – ae)		u[31:26], (1 – ae)[25:0]	0x0000 0000
0x3E	DRC2 aa	8	u[31:26], aa[25:0]	0x0080 0000
	DRC2 (1 – aa)		u[31:26], (1 – aa)[25:0]	0x0000 0000
0x3F	DRC2 ad	8	u[31:26], ad[25:0]	0x0080 0000
	DRC2 (1 – ad)		u[31:26], (1 – ad)[27::0]	0x0000 0000
0x40	DRC1-T	4	T1[31:0]	0xFDA2 1490
0x41	DRC1-K	4	u[31:26], k1[25:0]	0x0384 2109
0x42	DRC1-O	4	u[31:24], O[23:16], O1[15:0]	0x0008 4210
0x43	DRC2-T	4	T2[31:0]	0xFDA2 1490
0x44	DRC2-K	4	u[31:24], k2'[22:0]	0x0384 2109
0x45	DRC2-O	4	u[31:24], O2[25:0]	0x0008 4210
0x46	DRC control	4	u[31:2], ch6[1], ch1_5[0]	0x0000 0000
0x47–0x49		4	Reserved(4)	0x0000 0000
0x50		4	Bank update command register	0x0000 0000
0x51		8	V1OM3[31:0]	0x0000 0000
			V1OM1[31:0]	0x0080 0000
0x52		12	V2OM6[31:0]	0x0000 0000
			V2OM4[31:0]	0x0000 0000
			V2OM2[31:0]	0x0080 0000
0x53–0xFF		4	Reserved(4)	0x0000 0000

(4) Reserved registers should not be accessed.

Copyright © 2009, Texas Instruments Incorporated

CLOCK CONTROL REGISTER (0x00)

In the manual mode, the clock control register provides a way for the system microprocessor to update the data and clock rates based on the sample rate and associated clock frequencies. In the auto-detect mode, the clocks are automatically determined by the TAS5716. In this case, the clock control register contains the auto-detected clock status as automatically detected (D7–D2). Bits D7–D5 select the sample rate. Bits D4–D2 select the MCLK frequency. Bit D0 is used in manual mode only. In this mode, when the clocks are updated a 1 must be written to D0 to inform the DAP that the written clocks are valid.

Table 3. Clock Control Register (0x00)

D7	D6	D5	D4	D3	D2	D1	D0	FUNCTION
0	0	0	–	–	–	–	–	f_S = 32-kHz sample rate
0	0	1	–	–	–	–	–	f_S = 38-kHz sample rate
0	1	0	–	–	–	–	–	f_S = 44.1-kHz sample rate
0	**1**	**1**	**–**	**–**	**–**	–	**–**	**f_S = 48-kHz sample rate(1)**
1	0	0	–	–	–	–	–	f_S = 88.2-kHz sample rate
1	0	1	–	–	–	–	–	f_S = 96-kHz sample rate
1	1	0	–	–	–	–	–	f_S = 176.4-kHz sample rate
1	1	1	–	–	–	–	–	f_S = 192-kHz sample rate
–	–	–	0	0	0	–	–	MCLK frequency = 64 × f_S(2)
–	–	–	0	0	1	–	–	MCLK frequency = 128 × f_S(3)
–	–	–	0	1	0	–	–	MCLK frequency = 192 × f_S
–	**–**	**–**	**0**	**1**	**1**	**–**	**–**	**MCLK frequency = 256 × f_S** (1)
–	–	–	1	0	0	–	–	MCLK frequency = 384 × f_S(4)
–	–	–	1	0	1	–	–	MCLK frequency = 512 × f_S(4)
–	–	–	1	1	0	–	–	Reserved
–	–	–	1	1	1	–	–	Reserved
–	–	–	–	–	–	**0**	–	**Bit clock (SCLK) frequency = 64 × f_S or 32 × f_S (selected in register 0x04)(1)**
–	–	–	–	–	–	1	–	Bit clock (SCLK) frequency = 48 × f_S(5)
–	**–**	**–**	–	**–**	**–**	**–**	**0**	**Clock not valid (in manual mode only)(1)**
–	–	–				–	1	Clock valid (in manual mode only)

(1) Default values are in **bold**.
(2) Rate not available for 32-KHz data rate or in AM avoidance mode
(3) Rate not available for 32-kHz data rate
(4) Rate not available for 176.4-kHz and 192-kHz data rates
(5) Rate only available for 192-f_S and 384-f_S MCLK frequencies

DEVICE ID REGISTER (0x01)

The device ID register contains the ID code for the firmware revision.

Table 4. General Status Register (0x01)

D7	D6	D5	D4	D3	D2	D1	D0	FUNCTION
0	–	–	–	–	–	–	–	**Default(1)**
–	0	1	0	1	0	0	0	Identification code

(1) Default values are in **bold**.

Copyright © 2009, Texas Instruments Incorporated

ERROR STATUS REGISTER (0x02)

Note that the error bits are sticky bits that are not cleared by the hardware. This means that the software must clear the register (write zeroes) and then read them to determine if there are any persistent errors.

Table 5. Error Status Register (0x02)

D7	D6	D5	D4	D3	D2	D1	D0	FUNCTION
1	–	–	–	–	–	–	–	MCLK error
–	1	–	–	–	–	–	–	PLL autolock error
–	–	1	–	–	–	–	–	SCLK error
–	–	–	1	–	–	–	–	LRCLK error
–	–	–	–	1	–	–	–	Frame slip
0	**0**	**0**	**0**	**0**	**0**	**0**	**0**	**No errors**(1)

(1) Default values are in **bold**.

Note that the error bits are sticky bits that are not cleared by the hardware. This means that the software must clear the register (write zeroes) and then read them to determine if there are any persistent errors.

Table 6. Error Status Register (0x02)

D7	D6	D5	D4	D3	D2	D1	D0	FUNCTION
–	1	–	–	–	–	–	–	PLL autolock error
–	–	1	–	–	–	–	–	SCLK error
–	–	–	1	–	–	–	–	LRCLK error
–	–	–	–	1	–	–	–	Frame slip
0	**0**	**0**	**0**	**0**	**0**	**0**	**0**	**No errors**(1)

(1) Default values are in **bold**.

SYSTEM CONTROL REGISTER 1 (0x03)

The system control register 1 has several functions:

Bit D7: If 0, the dc-blocking filter for each channel is disabled.
If 1, the dc-blocking filter (–3 dB cutoff < 1 Hz) for each channel is enabled (default).

Bit D5: If 0, use soft unmute on recovery from clock error. This is a slow recovery.
If 1, use hard unmute on recovery from clock error (default). This is a fast recovery.

Bit D3: If 0, clock autodetect is enabled (default).
If 1, clock autodetect is disabled.

Bit D2: If 0, soft start is enabled (default).
If 1, soft start is disabled.

Bits D1–D0: Select de-emphasis

Table 7. System Control Register 1 (0x03)

D7	D6	D5	D4	D3	D2	D1	D0	FUNCTION
0	–	–	–	–	–	–	–	PWM high-pass (dc blocking) disabled
1	–	–	–	–	–	–	–	**PWM high-pass (dc blocking) enabled**(1)
–	**0**	–	–	–	–	–	–	**Reserved**(1)
–	–	0	–	–	–	–	–	Soft unmute on recovery from clock error
–	–	**1**	–	–	–	–	–	**Hard unmute on recovery from clock error**(1)
–	–	–	**0**	–	–	–	–	**Reserved**(1)
–	–	–	–	**0**	–	–	–	**Enable clock autodetect**(1)

(1) Default values are in **bold**.

Copyright © 2009, Texas Instruments Incorporated

Table 7. System Control Register 1 (0x03) (continued)

D7	D6	D5	D4	D3	D2	D1	D0	FUNCTION
–	–	–	–	1	–	–	–	Disable clock autodetect
–	–	–	–	–	**0**	–	–	**Enable soft start**(1)
–	–	–	–	–	1	–	–	Disable soft start
–	–	–	–	–	–	**0**	**0**	**No de-emphasis**(1)
–	–	–	–	–	–	0	1	Reserved
–	–	–	–	–	–	1	0	De-emphasis for f_S = 44.1 kHz
–	–	–	–	–	–	1	1	De-emphasis for f_S = 48 kHz

SERIAL DATA INTERFACE REGISTER (0x04)

As shown in Table 8, the TAS5716 supports 12 serial data modes. The default is 24-bit, I^2S mode.

Table 8. Serial Data Interface Control Register (0x04) Format

RECEIVE SERIAL DATA INTERFACE FORMAT	WORD LENGTH	D7–D5	D4	D3	D2	D1	D0
Right-justified	16	000	0	0	0	0	0
Right-justified	20	000	0	0	0	0	1
Right-justified	24	000	0	0	0	1	0
I^2S	16	000	0	0	0	1	1
I^2S	20	000	0	0	1	0	0
I^2S (1)	**24**	**000**	**0**	**0**	**1**	**0**	**1**
Left-justified	16	000	0	0	1	1	0
Left-justified	20	000	0	0	1	1	1
Left-justified	24	000	0	1	0	0	0
Reserved		000	0	1	0	0	1
Right-justified	18	000	0	1	0	1	0
Reserved		000	0	1	0	1	1
Reserved		000	0	1	1	0	0
Reserved		000	0	1	1	0	1
Reserved		000	0	1	1	1	0
Reserved		000	0	1	1	1	1
Reserved		000	1	0	0	0	0
Reserved		000	1	0	0	0	1
Reserved		000	1	0	0	1	0
I^2S (32 f_S SCLK)	16	000	1	0	0	1	1
Reserved		000	1	0	1	0	0
Reserved		000	1	0	1	0	1
Left-justified (32 f_S SCLK)	16	000	1	0	1	1	0
Reserved		000	1	0	1	1	1
Reserved		000	1	1	X	X	X

(1) Default values are in **bold**.

Copyright © 2009, Texas Instruments Incorporated

SYSTEM CONTROL REGISTER 2 (0x05)

Bit D6 is a **control** bit and bit D5 is a **configuration** bit.

When bit D6 is set low, the system starts playing; otherwise, the outputs are shut down.

Bit D5 defines the configuration of the system, that is, it determines what configuration the system runs in when bit D6 is set low. When this bit is asserted, all channels are switching. Otherwise, only a subset of the PWM channels can run. The channels to shut down are defined in the shutdown group register (0x19). Bit D5 should only be changed when bit D6 is set, meaning that it is only possible to switch configurations by resetting the DAP and then restarting it again in the new configuration.

Bit D3 defines which volume register is used to control the volume of the HP_PWMx outputs when in headphone mode. When set to 0, the HP volume register (0x0C) controls the volume of the headphone outputs when in headphone mode. When bit D3 is set to 1, the channel volume registers (0x08–0x0B, 0x0D) are used for all modes (line out, headphone, speaker).

Bits D2–D1 define the output modes. The default is speaker mode with the headphone mode selectable via the external **HPSEL** terminal. The device can also be forced into headphone mode by asserting bit D1 (all other PWM channels are muted). Asserting bit D2 puts the device into a pseudo-line-out mode where the HP_PWMx and all other PWM channels are active. Bit D3 must also be asserted in this mode, and the HP_PWMx volume is controlled with the main speaker output volume controls via registers 0x08–0x0B and 0x0D..

Table 9. System Control Register 2 (0x05)

D7	D6	D5	D4	D3	D2	D1	D0	FUNCTION
0	–	–	–	–	–	–	–	**Reserved**(1)
–	1	0	–	–	–	–	–	All channels are shut down (hard mute). VALID1 = 0.
–	**1**	**1**	–	–	–	–	–	**All channels are shut down (hard mute). VALID1 = 0**(2)
–	0	0	–	–	–	–	–	When D6 is deasserted, all channels not belonging to shutdown group (SDG) are started. SDG register is 0x19.
–	0	1	–	–	–	–	–	When D6 is deasserted, all channels are started. VALID1 = 1. No channels in SDG1.
–	–	–	**0**	–	–	–	–	**Reserved**(2)
–	–	–	–	**0**	–	–	–	**Use HP volume register (0x0C) for adjusting headphone volume when in headphone mode.**(2)
–	–	–	–	1	–	–	–	Use channel volume registers (0x08–0x0B, 0x0D) for all modes.
–	–	–	–	–	**0**	**0**	–	**Speaker mode. Hardware pin, HPSEL = 1, forces device into headphone mode.**(2)
–	–	–	–	–	0	1	–	HP mode. This setting is logically ORed with external HPSEL pin.
–	–	–	–	–	1	0	–	Line out mode. Hardware pin, HPSEL, is ignored for this setting. HP_PWMx pins are active.
–	–	–	–	–	1	1	–	Reserved
–	–	–	–	–	–	–	**0**	**Reserved**(2)

(1) Default values are in **bold**.
(2) Default values are in **bold**.

SOFT MUTE REGISTER (0x06)

Writing a 1 to any of the following bits sets the output of the respective channel to 50% duty cycle. Default is 0x00.

Table 10. Soft Mute Register (0x06)

D7	D6	D5	D4	D3	D2	D1	D0	FUNCTION
–	–	–	–	–	–	–	1	Soft mute channel 1
–	–	–	–	–	–	1	–	Soft mute channel 2
–	–	–	–	–	1	–	–	Soft mute channel 3
–	–	–	–	1	–	–	–	Soft mute channel 4
–	–	1	–	–	–	–	–	Soft mute subwoofer channel (channel 6)
0	**0**	**0**	**0**	**0**	**0**	**0**	0	**Unmute all channels**(1)

(1) Default values are in **bold**.

VOLUME REGISTERS (0x07, 0x08, 0x09, 0x0A, 0x0B, 0x0C, 0x0D)

Step size is 0.5 dB.

Master volume	– 0x07 (default is mute)
Channel-1 volume	– 0x08 (default is 0 dB)
Channel-2 volume	– 0x09 (default is 0 dB)
Channel-3 volume	– 0x0A (default is 0 dB)
Channel-4 volume	– 0x0B (default is 0 dB)
Headphone volume	– 0x0C (default is 0 dB)
Channel-6 volume (subwoofer)	– 0x0D (default is 0 dB)

Table 11. Volume Register

D7	D6	D5	D4	D3	D2	D1	D0	FUNCTION
0	0	0	0	0	0	0	0	24 dB
0	**0**	**1**	**1**	**0**	**0**	**0**	**0**	**0 dB (default for individual channel volume)**(1)
1	1	1	1	1	1	1	0	–100 dB
1	**1**	**1**	**1**	**1**	**1**	**1**	**1**	**MUTE (default for master volume); 50% duty cycle at output – SOFT MUTE**(1)

(1) Default values are in **bold**.

Copyright © 2009, Texas Instruments Incorporated

VOLUME CONFIGURATION REGISTER (0x0E)

Bit D7:	Reserved = 1
Bit D6:	If 0, then biquad 1 (BQ1) volume compensation part only is disabled (default). If 1, then BQ1 volume compensation is enabled.
Bit D4:	Reserved = 1
Bit D3:	Reserved
Bits D2–D0:	Volume slew rate (Used to control volume change and MUTE ramp rates)

Table 12. Volume Control Register (0x0E)

D7	D6	D5	D4	D3	D2	D1	D0	FUNCTION
1	–	–	–	–	–	–	–	**Reserved (must be 1)** (1)
–	**0**	–	–	–	–	–	–	**Disable biquad volume compensation**(1)
–	1	–	–	–	–	–	–	Enable biquad volume compensation
–	–	**0**	–	–	–	–	–	**Reserved**(1)
–	–	–	**1**	–	–	–	–	**Reserved (must be 1)**(1)
–	–	–	–	**0**	–	–	–	**Reserved**(1)
–	–	–	–	–	0	0	0	Volume slew 512 steps (44 ms volume ramp time)
–	–	–	–	–	**0**	**0**	**1**	**Volume slew 1024 steps**(1) **(88 ms volume ramp time)**
–	–	–	–	–	0	1	0	Volume slew 2048 steps (176 ms volume ramp time)
–	–	–	–	–	0	1	1	Volume slew 256 steps (22 ms volume ramp time)
–	–	–	–	–	1	X	X	Reserved

(1) Default values are in **bold**.

MODULATION LIMIT REGISTER (0x10)

Set modulation limit. See the appropriate power stage data sheet for recommended modulation limits.

Table 13. Modulation Limit Register (0x10)

D7	D6	D5	D4	D3	D2	D1	D0	LIMIT [DCLKs]	MIN WIDTH [DCLKs]	MODULATION LIMIT
–	–	–	–	–	0	0	0	1	2	99.2%
–	–	–	–	–	0	0	1	2	4	98.4%
–	–	–	–	–	**0**	**1**	**0**	**3**	**6**	**97.7%** (1)
–	–	–	–	–	0	1	1	4	8	96.9%
–	–	–	–	–	1	0	0	5	10	96.1%
–	–	–	–	–	1	0	1	6	12	95.3%
–	–	–	–	–	1	1	0	7	14	94.5%
–	–	–	–	–	1	1	1	8	16	93.8%

(1) Default values are in **bold**.

Copyright © 2009, Texas Instruments Incorporated

INTERCHANNEL DELAY REGISTERS (0x11, 0x12, 0x13, 0x14, 0x15, 0x16)

Internal PWM Channels 1, 2, 3, 4, 5, and 6 are mapped into registers 0x11, 0x12 ,0x13, 0x14, 0x15, and 0x16.

Table 14. Channel Interchannel Delay Register Format

BITS DEFINITION	D7	D6	D5	D4	D3	D2	D1	D0	FUNCTION
	0	**0**	**0**	**0**	**0**	**0**	**0**	**0**	**Minimum absolute delay, 0 DCLK cycles, default for channel 0 (1)**
	0	1	1	1	1	1	0	0	Maximum positive delay, 31 × 4 DCLK cycles
	1	0	0	0	0	0	0	0	Maximum negative delay, –32 × 4 DCLK cycles
							0	0	Unused bits
SUBADDRESS	**D7**	**D6**	**D5**	**D4**	**D3**	**D2**	**D1**	**D0**	**Delay = (value) × 4 DCLKs**
0x11	**0**	**1**	**0**	**0**	**1**	**1**	**0**	**0**	**Default value for channel 1 (1) 19**
0x12	**0**	**0**	**1**	**1**	**0**	**1**	**0**	**0**	**Default value for channel 2 (1) 13**
0x13	**0**	**0**	**0**	**1**	**1**	**1**	**0**	**0**	**Default value for channel 3 (1) 7**
0x14	**0**	**1**	**1**	**0**	**0**	**1**	**0**	**0**	**Default value for channel 4 (1) 25**
0x15	**1**	**1**	**0**	**1**	**0**	**0**	**0**	**0**	**Default value for channel 5 (1) –12**
0x16	**1**	**0**	**0**	**1**	**0**	**0**	**0**	**0**	**Default value for channel 6 (1) -28**

(1) Default values are in **bold**.

OFFSET REGISTER (0x17)

The offset register is mapped into 0x17.

Table 15. Channel Offset Register Format

D7	D6	D5	D4	D3	D2	D1	D0	FUNCTION
0	**0**	**0**	**0**	**0**	**0**	**0**	**0**	**Minimum absolute offset, 0 DCLK cycles, default for channel 0 (1)**
1	1	1	1	1	1	1	1	Maximum absolute offset, 255 DCLK cycles

(1) Default values are in **bold**.

Copyright © 2009, Texas Instruments Incorporated

PWM SHUTDOWN GROUP REGISTER (0x19)

Settings of this register determine which PWM channels are active. The default is 0x30 for two BTL output channels and no external subwoofer output. The functionality of this register is tied to the state of bit D5 in the system control register.

This register defines which channels belong to the shutdown group (SDG). If a 1 is set in the shutdown group register, that particular channel is **not** started following an exit *out of all-channel shutdown* command (if bit D5 is set to 0 in system control register 2, 0x05).

Table 16. Shutdown Group Register

D7	D6	D5	D4	D3	D2	D1	D0	FUNCTION
0	–	–	–	–	–	–	–	**Reserved** (1)
–	**0**	–	–	–	–	–	–	**Reserved** (1)
–	–	0	–	–	–	–	–	Channel 6 does not belong to shutdown group.
–	–	**1**	–	–	–	–	–	**Channel 6 belongs to shut down group.** (1)
–	–	–	0	–	–	–	–	Channel 5 does not belong to shutdown group.
–	–	–	**1**	–	–	–	–	**Channel 5 belongs to shutdown group.** (1)
–	–	–	–	**0**	–	–	–	**Channel 4 does not belong to shutdown group.** (1)
–	–	–	–	1	–	–	–	Channel 4 belongs to shutdown group.
–	–	–	–	–	**0**	–	–	**Channel 3 does not belong to shutdown group.** (1)
–	–	–	–	–	1	–	–	Channel 3 belongs to shutdown group.
–	–	–	–	–	–	**0**	–	**Channel 2 does not belong to shutdown group.** (1)
–	–	–	–	–	–	1	–	Channel 2 belongs to shutdown group.
–	–	–	–	–	–	–	**0**	**Channel 1 does not belong to shutdown group.** (1)
–	–	–	–	–	–	–	1	Channel 1 belongs to shutdown group.

(1) Default values are in **bold**.

Copyright © 2009, Texas Instruments Incorporated

START/STOP PERIOD REGISTER (0x1A)

This register is used to control the soft-start and soft-stop period when starting up or shutting down channels. The value in this register determines the time for which the PWM inputs switch at 50% duty cycle. This helps reduce pops and clicks at start-up and shutdown.

D7 is used to configure the output stage in a bridge-tied mode or a single-ended mode.

Table 17. Start/Stop Period Register (0x1A)

D7	D6	D5	D4	D3	D2	D1	D0	FUNCTION
0	–	–	–	–	–	–	–	**Bridge-tied load (BTL)**(1)
1	–	–	–	–	–	–	–	Single-ended load (SE)
–	–	–	0	0	–	–	–	No 50% duty cycle start/stop period
–	–	–	0	1	0	0	0	16.5-ms 50% duty cycle start/stop period
–	–	–	0	1	0	0	1	23.9-ms 50% duty cycle start/stop period
–	–	–	**0**	**1**	**0**	**1**	**0**	**31.4-ms 50% duty cycle start/stop period**(1)
–	–	–	0	1	0	1	1	40.4-ms 50% duty cycle start/stop period
–	–	–	0	1	1	0	0	53.9-ms 50% duty cycle start/stop period
–	–	–	0	1	1	0	1	70.3-ms 50% duty cycle start/stop period
–	–	–	0	1	1	1	0	94.2-ms 50% duty cycle start/stop period
–	–	–	0	1	1	1	1	125.7-ms 50% duty cycle start/stop period
–	–	–	1	0	0	0	0	164.6-ms 50% duty cycle start/stop period
–	–	–	1	0	0	0	1	239.4-ms 50% duty cycle start/stop period
–	–	–	1	0	0	1	0	314.2-ms 50% duty cycle start/stop period
–	–	–	1	0	0	1	1	403.9-ms 50% duty cycle start/stop period
–	–	–	1	0	1	0	0	538.6-ms 50% duty cycle start/stop period
–	–	–	1	0	1	0	1	703.1-ms 50% duty cycle start/stop period
–	–	–	1	0	1	1	0	942.5-ms 50% duty cycle start/stop period
–	–	–	1	0	1	1	1	1256.6-ms 50% duty cycle start/stop period
–	–	–	1	1	0	0	0	1728.1-ms 50% duty cycle start/stop period
–	–	–	1	1	0	0	1	2513.6-ms 50% duty cycle start/stop period
–	–	–	1	1	0	1	0	3299.1-ms 50% duty cycle start/stop period
–	–	–	1	1	0	1	1	4241.7-ms 50% duty cycle start/stop period
–	–	–	1	1	1	0	0	5655.6-ms 50% duty cycle start/stop period
–	–	–	1	1	1	0	1	7383.7-ms 50% duty cycle start/stop period
–	–	–	1	1	1	1	0	9897.3-ms 50% duty cycle start/stop period
–	–	–	1	1	1	1	1	13,196.4-ms 50% duty cycle start/stop period

(1) Default values are in **bold**.

Copyright © 2009, Texas Instruments Incorporated

OSCILLATOR TRIM REGISTER (0x1B)

The TAS5716 PWM processor contains an internal oscillator for PLL reference. This reduces system cost because an external reference is not required. Currently, TI recommends a trim resistor value of 18.2 kΩ (1%). This should be connected between OSC_RES and DVSS.

The factory-trim procedure simply enables the factory trim that was previously done at the factory.

Note that trim always must be run following reset of the device.

Oscillator Trim Enable Procedure Example

Write data 0x00 to register 0x1B (enable factory trim).

Table 18. Oscillator Trim Register (0x1B)

D7	D6	D5	D4	D3	D2	D1	D0	FUNCTION
1	–	–	–	–	–	–	–	**Reserved** (1)
–	**0**	–	–	–	–	–	–	**Oscillator trim not done (read-only)**(1)
–	1	–	–	–	–	–	–	Oscillator trim done (read only)
–	–	**0**	**0**	**0**	**0**	–	–	**Reserved** (1)
–	–	–	–	–	–	0	–	Select factory trim (Write a 0 to select factory trim; default is 1.)
–	–	–	–	–	–	**1**	–	**Factory trim disabled**(1)
–	–	–	–	–	–	–	**0**	**Reserved**(1)

(1) Default values are in **bold**.

BKND_ERR REGISTER (0x1C)

When a back-end error signal is received ($\overline{\text{BKND_ERR}}$ = LOW), all the output stages are reset by setting all PWM, VALID1, and VALID2 signals LOW. Subsequently, the modulator waits approximately for the time listed in Table 19 before initiation of a reset.

Table 19. BKND_ERR Register (0x1C)

D7	D6	D5	D4	D3	D2	D1	D0	FUNCTION
–	–	–	–	0	0	0	0	Set back-end reset period to 0 ms (Reserved)
–	–	–	–	0	0	0	1	Set back-end reset period to 150 ms (Reserved)
–	–	–	–	**0**	**0**	**1**	**0**	**Set back-end reset period to 299 ms**(1)
–	–	–	–	0	0	1	1	Set back-end reset period to 449 ms
–	–	–	–	0	1	0	0	Set back-end reset period to 598 ms
–	–	–	–	0	1	0	1	Set back-end reset period to 748 ms
–	–	–	–	0	1	1	0	Set back-end reset period to 898 ms
–	–	–	–	0	1	1	1	Set back-end reset period to 1047 ms
–	–	–	–	1	0	0	0	Set back-end reset period to 1197 ms
–	–	–	–	1	0	0	1	Set back-end reset period to 1346 ms
–	–	–	–	1	0	1	0	Set back-end reset period to 1496 ms
–	–	–	–	1	0	1	1	Set back-end reset period to 1496 ms
–	–	–	–	1	1	–	–	Set back-end reset period to 1496 ms

(1) Default values are in **bold**.

Copyright © 2009, Texas Instruments Incorporated

INPUT MULTIPLEXER REGISTER (0x20)

The hex value for each nibble is the channel number. For each input multiplexer, any input from SDIN1, SDIN2 can be mapped to any internal TAS5716 channel.

Table 20. Input Multiplexer Register (0x20)

D31	D30	D29	D28	D27	D26	D25	D24	FUNCTION
0	**0**	**0**	**0**	**0**	**0**	**0**	**0**	**Reserved = 0x00**(1)
D23	**D22**	**D21**	**D20**	**D19**	**D18**	**D17**	**D16**	**FUNCTION**
0	–	–	–	–	–	–	–	Channel-1 AD mode
1	–	–	–	–	–	–	–	**Channel-1 BD mode**(1)
–	**0**	**0**	**0**	–	–	–	–	**SDIN1-L to channel 1**(1)
–	0	0	1	–	–	–	–	SDIN1-R to channel 1
–	0	1	0	–	–	–	–	SDIN2-L to channel 1
–	0	1	1	–	–	–	–	SDIN2-R to channel 1
–	1	0	0	–	–	–	–	Reserved
–	1	0	1	–	–	–	–	Reserved
–	1	1	0	–	–	–	–	Ground (0) to channel 1
–	1	1	1	–	–	–	–	Reserved
–	–	–	–	0	–	–	–	Channel 2 AD mode
–	–	–	–	**1**	–	–	–	**Channel 2 BD mode**(1)
–	–	–	–	–	0	0	0	SDIN1-L to channel 2
–	–	–	–	–	**0**	**0**	**1**	**SDIN1-R to channel 2**(1)
–	–	–	–	–	0	1	0	SDIN2-L to channel 2
–	–	–	–	–	0	1	1	SDIN2-R to channel 2
–	–	–	–	–	1	0	0	Reserved
–	–	–	–	–	1	0	1	Reserved
–	–	–	–	–	1	1	0	Ground (0) to channel 2
–	–	–	–	–	1	1	1	Reserved

(1) Default values are in **bold**.

Copyright © 2009, Texas Instruments Incorporated

Table 20. Input Multiplexer Register (0x20) (continued)

D15	D14	D13	D12	D11	D10	D9	D8	FUNCTION
0	–	–	–	–	–	–	–	**Reserved**(2)
–	0	0	0	–	–	–	–	SDIN1-L to channel 3
–	0	0	1	–	–	–	–	SDIN1-R to channel 3
–	0	1	0	–	–	–	–	SDIN2-L to channel 3
–	0	1	1	–	–	–	–	SDIN2-R to channel 3
–	1	0	0	–	–	–	–	Reserved
–	1	0	1	–	–	–	–	Reserved
–	1	1	0	–	–	–	–	Ground (0) to channel 3
–	**1**	**1**	**1**	–	–	–	–	**Ch1 (BTL–) to channel 3—BTL pair for channel 1**(2)
–	–	–	–	**0**	–	–	–	**Reserved**(2)
–	–	–	–	–	0	0	0	SDIN1-L to channel 4
–	–	–	–	–	0	0	1	SDIN1-R to channel 4
–	–	–	–	–	0	1	0	SDIN2-L to channel 4
–	–	–	–	–	0	1	1	SDIN2-R to channel 4
–	–	–	–	–	1	0	0	Reserved
–	–	–	–	–	1	0	1	Reserved
–	–	–	–	–	1	1	0	Ground (0) to channel 4
–	–	–	–	–	**1**	**1**	**1**	**Ch2 (BTL–) to channel 4—BTL pair for channel 2**(2)
D7	**D6**	**D5**	**D4**	**D3**	**D2**	**D1**	**D0**	**FUNCTION**
0	–	–	–	–	–	–	–	**Reserved**(2)
–	1	0	0	–	–	–	–	Reserved
–	1	0	1	–	–	–	–	Reserved
–	1	1	0	–	–	–	–	Ground (0) to channel 5
–	**1**	**1**	**1**	–	–	–	–	**Ch6 (BTL–) to channel 5—BTL pair to channel 6**(2)
–	–	–	–	0	–	–	–	Channel 6 AD mode
–	–	–	–	**1**	–	–	–	**Channel 6 BD mode**(2)
–	–	–	–	–	0	0	0	SDIN1-L to channel 6
–	–	–	–	–	0	0	1	SDIN1-R to channel 6
–	–	–	–	–	**0**	**1**	**0**	**SDIN2-L to channel 6** (2)
–	–	–	–	–	0	1	1	SDIN2-R to channel 6
–	–	–	–	–	1	0	0	Reserved
–	–	–	–	–	1	0	1	Reserved
–	–	–	–	–	1	1	0	Ground (0) to channel 6
–	–	–	–	–	1	1	1	Reserved

(2) Default values are in **bold**.

CHANNEL-6 INPUT MULTIPLEXER-2 REGISTER (0x21)

Bits D31–D16: Unused

Bits D15–D10: Reserved

Bits D7–D0: Reserved

Table 21. Downmix Input Multiplexer Register

D31	D30	D29	D28	D27	D26	D25	D24	FUNCTION
–	–	–	–	–	–	–	–	Unused
D23	**D22**	**D21**	**D20**	**D19**	**D18**	**D17**	**D16**	**FUNCTION**
–	–	–	–	–	–	–	–	Unused
D15	**D14**	**D13**	**D12**	**D11**	**D10**	**D9**	**D8**	**FUNCTION**
0	**1**	**0**	**0**	**0**	**0**	–	–	**Reserved (1)**
–	–	–	–	–	–	0	0	Enable channel 6 data to channel 6
–	–	–	–	–	–	0	1	Enable bass management on channel 6
–	–	–	–	–	–	**1**	**0**	**Enable (L+R)/2 TO channel 6 (1)**
–	–	–	–	–	–	1	1	Reserved
D7	**D6**	**D5**	**D4**	**D3**	**D2**	**D1**	**D0**	**FUNCTION**
0	**0**	**0**	**0**	**0**	**0**	**1**	**1**	**Reserved (1)**

(1) Default values are in **bold**.

Copyright © 2009, Texas Instruments Incorporated

AM MODE REGISTER (0x22)

See the *PurePath Digital™ AM Interference Avoidance* application note (SLEA040).

Table 22. AM Mode Register (0x22)

D20	D19	D18	D17	D16	FUNCTION
0	–	–	–	–	**AM mode disabled**(1)
1	–	–	–	–	AM mode enabled
–	**0**	**0**	–	–	**Select sequence 1**(1)
–	0	1	–	–	Select sequence 2
–	1	0	–	–	Select sequence 3
–	1	1	–	–	Select sequence 4
–	–	–	**0**	–	**IF frequency = 455 kHz**(1)
–	–	–	1	–	IF frequency = 262.5 kHz
–	–	–	–	**0**	**Use BCD tuned frequency**(1)
–	–	–	–	1	Use binary tuned frequency

(1) Default values are in **bold**.

Table 23. AM Tuned Frequency Register in BCD Mode

D15	D14	D13	D12	D11	D10	D9	D8	FUNCTION
0	0	0	X	–	–	–	–	BCD frequency (1000s kHz)
–	–	–	–	X	X	X	X	BCD frequency (100s kHz)
0	**0**	**0**	**0**	**0**	**0**	**0**	**0**	**Default value**(1)
D7	**D6**	**D5**	**D4**	**D3**	**D2**	**D1**	**D0**	**FUNCTION**
X	X	X	X	–	–	–	–	BCD frequency (10s kHz)
–	–	–	–	X	X	X	X	BCD frequency (1s kHz)
0	**0**	**0**	**0**	**0**	**0**	**0**	**0**	**Default value**(1)

(1) Default values are in **bold**.

OR

Table 24. AM Tuned Frequency Register in Binary Mode

D15	D14	D13	D12	D11	D10	D9	D8	FUNCTION
0	0	0	0	0	X	X	X	Binary frequency
0	**0**	**0**	**0**	**0**	**0**	**0**	**0**	**Default value**(1)
D7	**D6**	**D5**	**D4**	**D3**	**D2**	**D1**	**D0**	**FUNCTION**
X	X	X	X	X	X	X	X	Binary frequency
0	**0**	**0**	**0**	**0**	**0**	**0**	**0**	**Default value**(1)

(1) Default values are in **bold**.

Copyright © 2009, Texas Instruments Incorporated

PWM OUTPUT MUX REGISTER (0x25)

This DAP output multiplexer selects which internal PWM channel is output to the external pins. Any channel can be output to any external output pin.

Bits D30–D25: Selects which PWM channel is output to HPL_PWM and HPR_PWM

Bits D23–D20: Selects which PWM channel is output to OUT_A

Bits D19–D16: Selects which PWM channel is output to OUT_B

Bits D15–D12: Selects which PWM channel is output to OUT_C

Bits D11–D08: Selects which PWM channel is output to OUT_D

Bits D07–D04: Selects which PWM channel is output to SUB_PWM–

Bits D03–D00: Selects which PWM channel is output to SUB_PWM+

Note that channels are encoded so that channel 1 = 0x00, channel 2 = 0x01, …, channel 6 = 0x05.

Table 25. PWM Output Mux Register (0x25)

D31	D30	D29	D28	D27	D26	D25	D24	FUNCTION
0	–	–	–	–	–	–	–	**Reserved (1)**
–	**0**	**0**	**0**	–	–	–	–	**Multiplex channel 1 to HPL_PWM (1)**
–	0	0	1	–	–	–	–	Multiplex channel 2 to HPL_PWM
–	0	1	0	–	–	–	–	Multiplex channel 3 to HPL_PWM
–	0	1	1	–	–	–	–	Multiplex channel 4 to HPL_PWM
–	1	0	0	–	–	–	–	Multiplex channel 5 to HPL_PWM
–	1	0	1	–	–	–	–	Multiplex channel 6 to HPL_PWM
–	–	–	–	**0**	–	–	–	**Reserved**
–	–	–	–	–	0	0	0	Multiplex channel 1 to HPR_PWM
–	–	–	–	–	**0**	**0**	**1**	**Multiplex channel 2 to HPR_PWM (1)**
–	–	–	–	–	0	1	0	Multiplex channel 3 to HPR_PWM
–	–	–	–	–	0	1	1	Multiplex channel 4 to HPR_PWM
–	–	–	–	–	1	0	0	Multiplex channel 5 to HPR_PWM
–	–	–	–	–	1	0	1	Multiplex channel 6 to HPR_PWM
D23	**D22**	**D21**	**D20**	**D19**	**D18**	**D17**	**D16**	**FUNCTION**
0	**0**	**0**	**0**	–	–	–	–	**Multiplex channel 1 to OUT_A (1)**
0	0	0	1	–	–	–	–	Multiplex channel 2 to OUT_A
0	0	1	0	–	–	–	–	Multiplex channel 3 to OUT_A
0	0	1	1	–	–	–	–	Multiplex channel 4 to OUT_A
0	1	0	0	–	–	–	–	Multiplex channel 5 to OUT_A
0	1	0	1	–	–	–	–	Multiplex channel 6 to OUT_A
–	–	–	–	0	0	0	0	Multiplex channel 1 to OUT_B
–	–	–	–	0	0	0	1	Multiplex channel 2 to OUT_B
–	–	–	–	**0**	**0**	**1**	**0**	**Multiplex channel 3 to OUT_B (1)**
–	–	–	–	0	0	1	1	Multiplex channel 4 to OUT_B
–	–	–	–	0	1	0	0	Multiplex channel 5 to OUT_B
–	–	–	–	0	1	0	1	Multiplex channel 6 to OUT_B

(1) Default values are in **bold**.

Copyright © 2009, Texas Instruments Incorporated

Table 25. PWM Output Mux Register (0x25) (continued)

D15	D14	D13	D12	D11	D10	D9	D8	FUNCTION
0	0	0	0	–	–	–	–	Multiplex channel 1 to OUT_C
0	**0**	**0**	**1**	–	–	–	–	**Multiplex channel 2 to OUT_C**(2)
0	0	1	0	–	–	–	–	Multiplex channel 3 to OUT_C
0	0	1	1	–	–	–	–	Multiplex channel 4 to OUT_C
0	1	0	0	–	–	–	–	Multiplex channel 5 to OUT_C
0	1	0	1	–	–	–	–	Multiplex channel 6 to OUT_C
–	–	–	–	0	0	0	0	Multiplex channel 1 to OUT_D
–	–	–	–	0	0	0	1	Multiplex channel 2 to OUT_D
–	–	–	–	0	0	1	0	Multiplex channel 3 to OUT_D
–	–	–	–	**0**	**0**	**1**	**1**	**Multiplex channel 4 to OUT_D**(2)
–	–	–	–	0	1	0	0	Multiplex channel 5 to OUT_D
–	–	–	–	0	1	0	1	Multiplex channel 6 to OUT_D
D7	D6	D5	D4	D3	D2	D1	D0	FUNCTION
0	0	0	0	–	–	–		Multiplex channel 1 to SUB_PWM–
0	0	0	1	–	–	–	–	Multiplex channel 2 to SUB_PWM–
0	0	1	0	–	–	–	–	Multiplex channel 3 to SUB_PWM–
0	0	1	1	–	–	–	–	Multiplex channel 4 to SUB_PWM–
0	**1**	**0**	**0**	–	–	–	–	**Multiplex channel 5 to SUB_PWM–**(2)
0	1	0	1	–	–	–	–	Multiplex channel 6 to SUB_PWM–
–	–	–	–	0	0	0	0	Multiplex channel 1 to SUB_PWM+
–	–	–	–	0	0	0	1	Multiplex channel 2 to SUB_PWM+
–	–	–	–	0	0	1	0	Multiplex channel 3 to SUB_PWM+
–	–	–	–	0	0	1	1	Multiplex channel 4 to SUB_PWM+
–	–	–	–	0	1	0	0	Multiplex channel 5 to SUB_PWM+
–	–	–	–	**0**	**1**	**0**	**1**	**Multiplex channel 6 to SUB_PWM+**(2)

(2) Default values are in **bold**.

LOUDNESS BIQUAD GAIN INVERSE REGISTER (0x26)

Bit D6 of the volume configuration register (0x0E) enables/disables gain compensation for BQ1. D6 = 0 disables gain compensation (default); D6 = 1 enables gain compensation. Max/min biquad gain = ±4.

Table 26. Loudness Biquad Gain Inverse Register (3.23 Format)

CONTENT	DEFINITION
u[31:26], x[25:0]	1/G(1)

(1) G = gain of the biquad

LOUDNESS SCALE REGISTER (0x28)

Table 27. Loudness Scale Register (3.23 Format)

CONTENT	DEFINITION
u[31:26], x[25:0]	Scale = 1/(1 – 1/G)(1)

(1) G = gain of the biquad

Copyright © 2009, Texas Instruments Incorporated

DRC CONTROL (0x46)

D7	D6	D5	D4	D3	D2	D1	D0	FUNCTION
–	–	–	–	**0**	–	–	–	**DRC1 independent of channel 4**(1)
–	–	–	–	1	–	–	–	DRC1 dependent of channel 4
–	–	–	–	–	**0**	–	–	**DRC1 independent of channel 3**(1)
–	–	–	–	–	1	–	–	DRC1 dependent of channel 3
–	–	–	–	–	–	**0**	–	**DRC2 (subchannel) turned OFF**(1)
–	–	–	–	–	–	1	–	DRC2 (subchannel) turned ON
–	–	–	–	–	–	–	**0**	**DRC1 (satellite channels) turned OFF**(1)
–	–	–	–	–	–	–	1	DRC1 (satellite channels) turned ON

(1) Default values are in **bold**.

BANK SWITCH AND HEADPHONE DRC/EQ CONTROL (0x50)

Table 28. Bank Switching Command

D7	D6	D5	D4	D3	D2	D1	D0	FUNCTION
0	–	–	–	–	–	–	–	**EQ disabled in headphone mode**(1)
1	–	–	–	–	–	–	–	EQ enabled in headphone mode
–	**0**	–	–	–	–	–	–	**DRC disabled in headphone mode**(1)
–	1	–	–	–	–	–	–	DRC enabled in headphone mode
–	–	**0**	**0**	**0**	–	–	–	**Reserved**(1)
–	–	–	–	–	**0**	**0**	**0**	**No bank switching. All updates to DAP**(1)
–	–	–	–	–	0	0	1	Configure bank 1 (32 kHz)
–	–	–	–	–	0	1	0	Configure bank 2 (44.1/48 kHz)
–	–	–	–	–	0	1	1	Configure bank 3 (88.2/96 kHz and above)
–	–	–	–	–	1	0	0	Automatic bank selection

(1) Default values are in **bold**.

Copyright © 2009, Texas Instruments Incorporated

PAP (S–PQFP–G64) PowerPAD™ PLASTIC QUAD FLATPACK

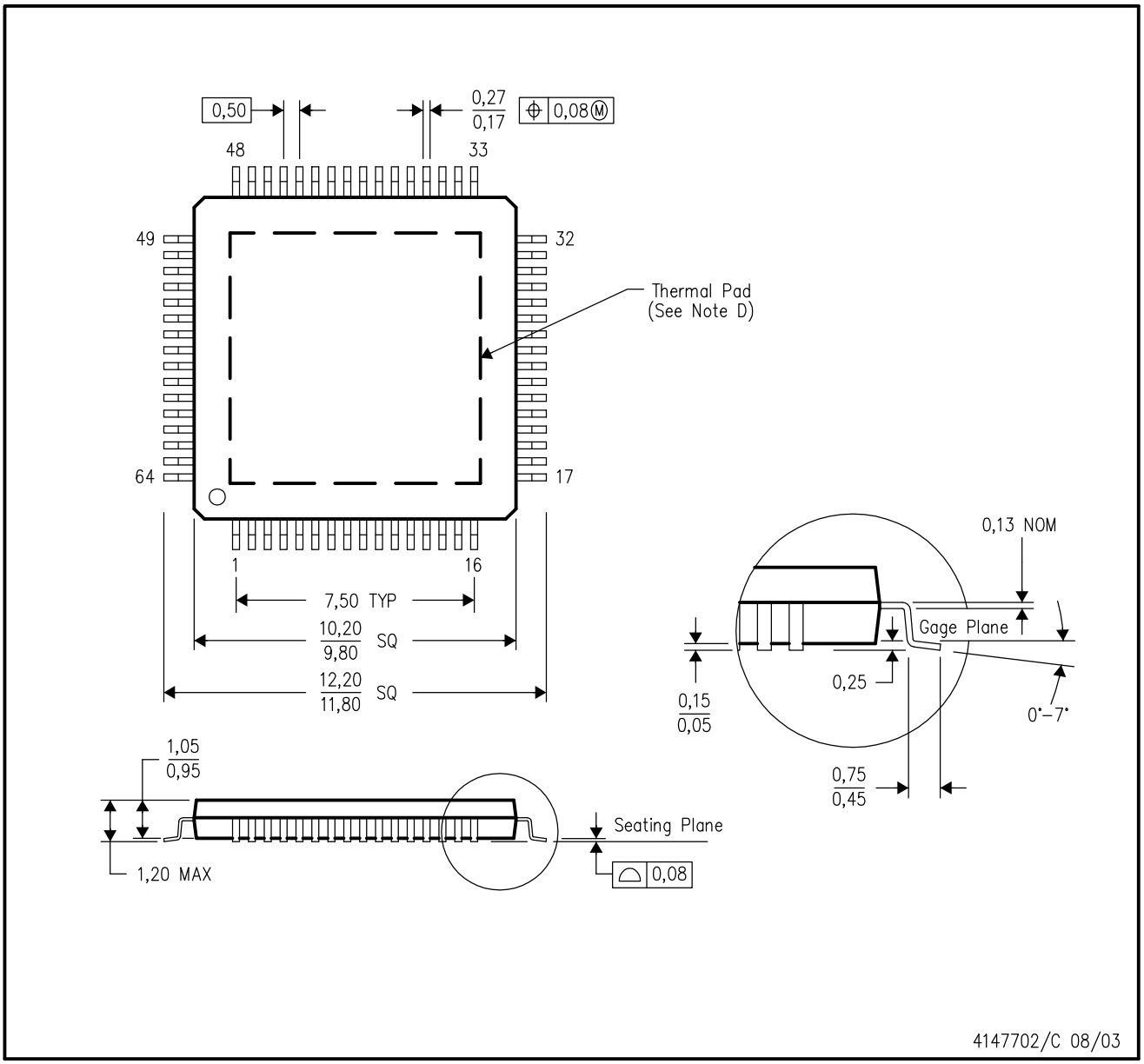

NOTES:
A. All linear dimensions are in millimeters.
B. This drawing is subject to change without notice.
C. Body dimensions do not include mold flash or protrusion
D. This package is designed to be soldered to a thermal pad on the board. Refer to Technical Brief, PowerPad Thermally Enhanced Package, Texas Instruments Literature No. SLMA002 for information regarding recommended board layout. This document is available at www.ti.com <http://www.ti.com>.
E. Falls within JEDEC MS–026

PowerPAD is a trademark of Texas Instruments.

PAP (S–PQFP–G64) PowerPAD™ PLASTIC QUAD FLATPACK

THERMAL INFORMATION

This PowerPAD™ package incorporates an exposed thermal pad that is designed to be attached to a printed circuit board (PCB). The thermal pad must be soldered directly to the PCB. After soldering, the PCB can be used as a heatsink. In addition, through the use of thermal vias, the thermal pad can be attached directly to the appropriate copper plane shown in the electrical schematic for the device, or alternatively, can be attached to a special heatsink structure designed into the PCB. This design optimizes the heat transfer from the integrated circuit (IC).

For additional information on the PowerPAD package and how to take advantage of its heat dissipating abilities, refer to Technical Brief, PowerPAD Thermally Enhanced Package, Texas Instruments Literature No. SLMA002 and Application Brief, PowerPAD Made Easy, Texas Instruments Literature No. SLMA004. Both documents are available at www.ti.com.

The exposed thermal pad dimensions for this package are shown in the following illustration.

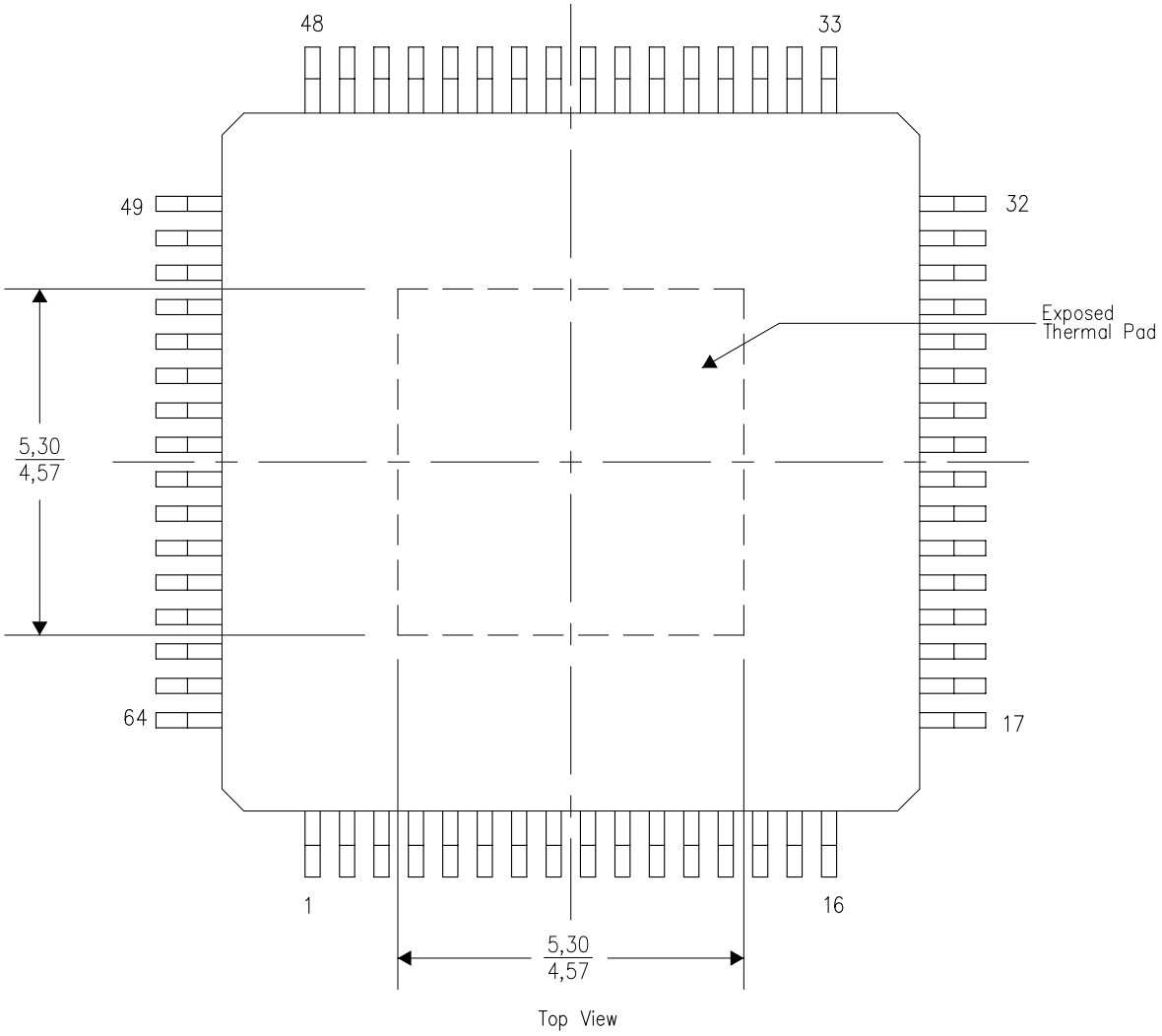

Exposed Thermal Pad Dimensions

4206326–8/M 09/10

NOTES: A. All linear dimensions are in millimeters

PowerPAD is a trademark of Texas Instruments

PAP (S–PQFP–G64) PowerPAD™ PLASTIC QUAD FLATPACK

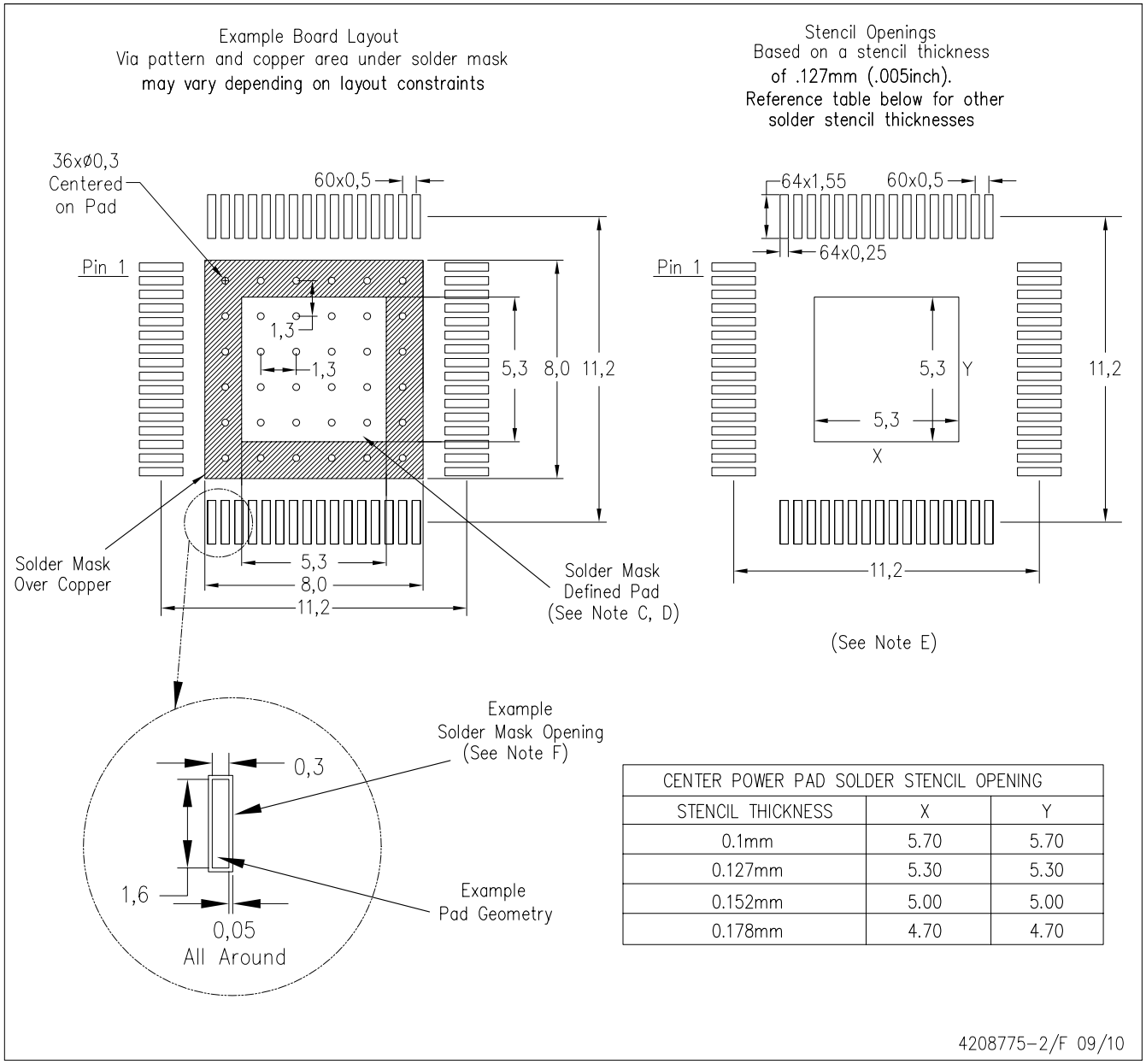

CENTER POWER PAD SOLDER STENCIL OPENING		
STENCIL THICKNESS	X	Y
0.1mm	5.70	5.70
0.127mm	5.30	5.30
0.152mm	5.00	5.00
0.178mm	4.70	4.70

NOTES:
- A. All linear dimensions are in millimeters.
- B. This drawing is subject to change without notice.
- C. Customers should place a note on the circuit board fabrication drawing not to alter the center solder mask defined pad.
- D. This package is designed to be soldered to a thermal pad on the board. Refer to Technical Brief, PowerPad Thermally Enhanced Package, Texas Instruments Literature No. SLMA002, SLMA004, and also the Product Data Sheets for specific thermal information, via requirements, and recommended board layout. These documents are available at www.ti.com <http://www.ti.com>. Publication IPC–7351 is recommended for alternate designs.
- E. Laser cutting apertures with trapezoidal walls and also rounding corners will offer better paste release. Customers should contact their board assembly site for stencil design recommendations. Example stencil design based on a 50% volumetric metal load solder paste. Refer to IPC–7525 for other stencil recommendations.
- F. Customers should contact their board fabrication site for solder mask tolerances between and around signal pads.

PowerPAD is a trademark of Texas Instruments

IMPORTANT NOTICE

Texas Instruments Incorporated and its subsidiaries (TI) reserve the right to make corrections, modifications, enhancements, improvements, and other changes to its products and services at any time and to discontinue any product or service without notice. Customers should obtain the latest relevant information before placing orders and should verify that such information is current and complete. All products are sold subject to TI's terms and conditions of sale supplied at the time of order acknowledgment.

TI warrants performance of its hardware products to the specifications applicable at the time of sale in accordance with TI's standard warranty. Testing and other quality control techniques are used to the extent TI deems necessary to support this warranty. Except where mandated by government requirements, testing of all parameters of each product is not necessarily performed.

TI assumes no liability for applications assistance or customer product design. Customers are responsible for their products and applications using TI components. To minimize the risks associated with customer products and applications, customers should provide adequate design and operating safeguards.

TI does not warrant or represent that any license, either express or implied, is granted under any TI patent right, copyright, mask work right, or other TI intellectual property right relating to any combination, machine, or process in which TI products or services are used. Information published by TI regarding third-party products or services does not constitute a license from TI to use such products or services or a warranty or endorsement thereof. Use of such information may require a license from a third party under the patents or other intellectual property of the third party, or a license from TI under the patents or other intellectual property of TI.

Reproduction of TI information in TI data books or data sheets is permissible only if reproduction is without alteration and is accompanied by all associated warranties, conditions, limitations, and notices. Reproduction of this information with alteration is an unfair and deceptive business practice. TI is not responsible or liable for such altered documentation. Information of third parties may be subject to additional restrictions.

Resale of TI products or services with statements different from or beyond the parameters stated by TI for that product or service voids all express and any implied warranties for the associated TI product or service and is an unfair and deceptive business practice. TI is not responsible or liable for any such statements.

TI products are not authorized for use in safety-critical applications (such as life support) where a failure of the TI product would reasonably be expected to cause severe personal injury or death, unless officers of the parties have executed an agreement specifically governing such use. Buyers represent that they have all necessary expertise in the safety and regulatory ramifications of their applications, and acknowledge and agree that they are solely responsible for all legal, regulatory and safety-related requirements concerning their products and any use of TI products in such safety-critical applications, notwithstanding any applications-related information or support that may be provided by TI. Further, Buyers must fully indemnify TI and its representatives against any damages arising out of the use of TI products in such safety-critical applications.

TI products are neither designed nor intended for use in military/aerospace applications or environments unless the TI products are specifically designated by TI as military-grade or "enhanced plastic." Only products designated by TI as military-grade meet military specifications. Buyers acknowledge and agree that any such use of TI products which TI has not designated as military-grade is solely at the Buyer's risk, and that they are solely responsible for compliance with all legal and regulatory requirements in connection with such use.

TI products are neither designed nor intended for use in automotive applications or environments unless the specific TI products are designated by TI as compliant with ISO/TS 16949 requirements. Buyers acknowledge and agree that, if they use any non-designated products in automotive applications, TI will not be responsible for any failure to meet such requirements.

Following are URLs where you can obtain information on other Texas Instruments products and application solutions:

Products		**Applications**	
Amplifiers	amplifier.ti.com	Audio	www.ti.com/audio
Data Converters	dataconverter.ti.com	Automotive	www.ti.com/automotive
DLP® Products	www.dlp.com	Communications and Telecom	www.ti.com/communications
DSP	dsp.ti.com	Computers and Peripherals	www.ti.com/computers
Clocks and Timers	www.ti.com/clocks	Consumer Electronics	www.ti.com/consumer-apps
Interface	interface.ti.com	Energy	www.ti.com/energy
Logic	logic.ti.com	Industrial	www.ti.com/industrial
Power Mgmt	power.ti.com	Medical	www.ti.com/medical
Microcontrollers	microcontroller.ti.com	Security	www.ti.com/security
RFID	www.ti-rfid.com	Space, Avionics & Defense	www.ti.com/space-avionics-defense
RF/IF and ZigBee® Solutions	www.ti.com/lprf	Video and Imaging	www.ti.com/video
		Wireless	www.ti.com/wireless-apps

Mailing Address: Texas Instruments, Post Office Box 655303, Dallas, Texas 75265
Copyright © 2010, Texas Instruments Incorporated