LM4916 Boomer® Audio Power Amplifier Series 1.5V, Mono 85mW BTL Output, 14mW Stereo Headphone Audio Amplifier

Check for Samples: LM4916

FEATURES

- **Single-Cell 0.9V to 2.5V Battery Operation**
- **BTL Mode for Mono Speaker**
- **Single-Ended Headphone Operation with Coupling Capacitors**
- **Unity-Gain Stable**
- **"Click and Pop" Suppression Circuitry**
- **Active-Low Micropower Shutdown**
- **Low Current, Active-Low Mute Mode**
- **Thermal Shutdown Protection Circuitry**

APPLICATIONS

- **Portable One-Cell Audio Products**
- **Portable One-Cell Electronic Devices**

KEY SPECIFICATIONS

- **Mono-BTL Output Power**
- **(R_L=8Ω, V_{DD}=1.5V, THD+N=1%), 85mW (typ)**
- **Stereo Headphone Output Power**
- **(R_L=16Ω, V_{DD}=1.5V, THD+N=1%), 14mW (typ)**
- **Micropower Shutdown Current, 0.02µA (typ)**
- **Supply Voltage Operating Range, 0.9V<V_{DD}<2.5V**
- **PSRR 1kHz, V_{DD}=1.5V, 66dB (typ)**

DESCRIPTION

The unity gain stable LM4916 is both a mono differential output (for bridge-tied loads or BTL) audio power amplifier and a Single Ended (SE) stereo headphone amplifier. Operating on a single 1.5V supply, the mono BTL mode delivers 85mW into an 8Ω load at 1% THD+N. In Single Ended stereo headphone mode, the amplifier delivers 14mW per channel into a 16Ω load at 1% THD+N.

With the LM4916 packaged in the MM and WSON packages, the customer benefits include low profile and small size. These packages minimize PCB area and maximizes output power.

The LM4916 features circuitry that reduces output transients ("clicks" and "pops") during device turn-on and turn-off, an externally controlled, low-power consumption, active-low shutdown mode, and thermal shutdown. Boomer audio power amplifiers are designed specifically to use few external components and provide high quality output power in a surface mount package.

Typical Application

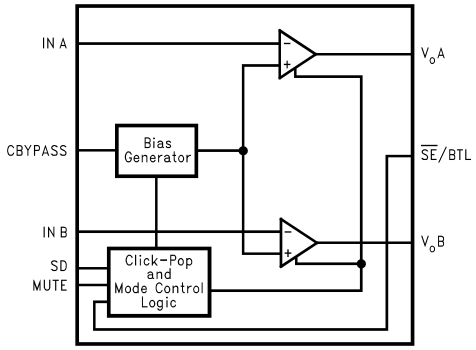

Figure 1. Block Diagram

Please be aware that an important notice concerning availability, standard warranty, and use in critical applications of Texas Instruments semiconductor products and disclaimers thereto appears at the end of this data sheet.

All trademarks are the property of their respective owners.

PRODUCTION DATA information is current as of publication date. Products conform to specifications per the terms of the Texas Instruments standard warranty. Production processing does not necessarily include testing of all parameters.

Copyright © 2003–2013, Texas Instruments Incorporated

Connection Diagrams

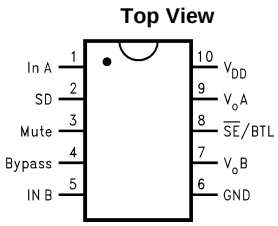

Figure 2. VSSOP Package
See Package Number DGS0010A

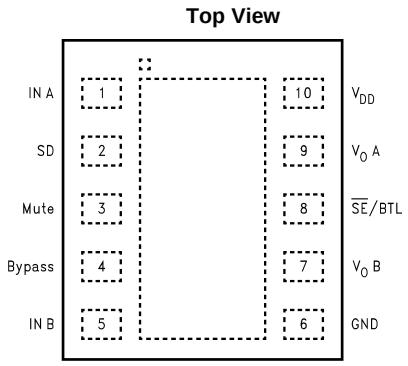

Figure 3. WSON Package
See Package Number NGY0010A

Typical Connections

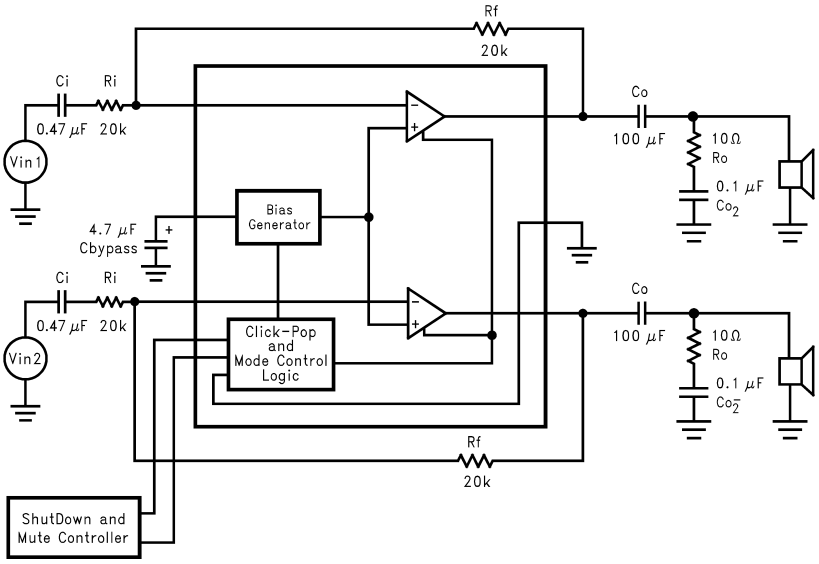

Figure 4. Typical Single Ended Output Configuration Circuit

Copyright © 2003–2013, Texas Instruments Incorporated

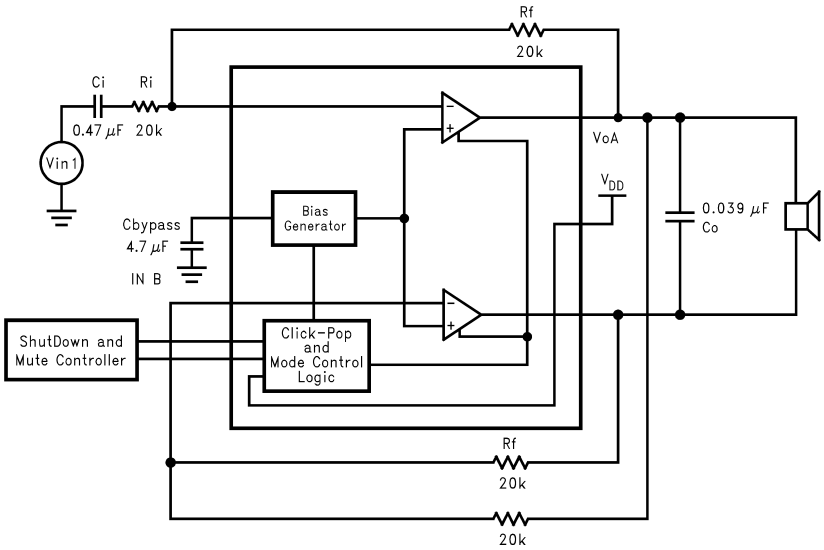

Figure 5. Typical BTL Speaker Configuration Circuit

These devices have limited built-in ESD protection. The leads should be shorted together or the device placed in conductive foam during storage or handling to prevent electrostatic damage to the MOS gates.

ABSOLUTE MAXIMUM RATINGS[1][2]

Supply Voltage		3.6V
Storage Temperature		−65°C to +150°C
Input Voltage		−0.3V to V_{DD} +0.3V
Power Dissipation[3]		Internally limited
ESD Susceptibility[4]		2000V
ESD Susceptibility[5]		200V
Junction Temperature		150°C
Soldering Information	Small Outline Package Vapor Phase (60sec)	215°C
	Infrared (15 sec)	220°C
Thermal Resistance	θ_{JA} (typ) DGS0010A	175°C/W
	θ_{JA} (typ) NGY0010A	73°C/W

(1) Absolute Maximum Ratings indicate limits beyond which damage to the device may occur. Operating Ratings indicate conditions for which the device is functional, but do not ensure specific performance limits. Electrical Characteristics state DC and AC electrical specifications under particular test conditions which ensure specific performance limits. This assumes that the device is within the Operating Ratings. Specifications are not ensured for parameters where no limit is given, however, the typical value is a good indication of device performance.
(2) If Military/Aerospace specified devices are required, please contact the Texas Instruments Sales Office/Distributors for availability and specifications.
(3) The maximum power dissipation is dictated by T_{JMAX}, θ_{JA}, and the ambient temperature T_A and must be derated at elevated temperatures. The maximum allowable power dissipation is $P_{DMAX} = (T_{JMAX} - T_A)/\theta_{JA}$. For the LM4916, T_{JMAX} = 150°C. For the θ_{JA}s, please see the APPLICATION INFORMATION section or the ABSOLUTE MAXIMUM RATINGS[00] section.
(4) Human body model, 100pF discharged through a 1.5kΩ resistor.
(5) Machine model, 220pF–240pF discharged through all pins.

OPERATING RATINGS

Temperature Range	$T_{MIN} \le T_A \le T_{MAX}$	−40°C ≤ T_A ≤ 85°C
Supply Voltage[1]		0.9V ≤ V_{DD} ≤ 2.5V

(1) When operating on a power supply voltage of 0.9V, the LM4916 willl not function below 0°C. At a power supply voltage of 1V or greater, the LM4916 will operate down to -40°C.

Copyright © 2003–2013, Texas Instruments Incorporated

ELECTRICAL CHARACTERISTICS FOR THE LM4916 (1) (2)

The following specifications apply for the circuit shown in Figure 38 operating with V_{DD} = 1. 5V, unless otherwise specified. Limits apply for T_A = 25°C.

Parameter		Test Conditions	LM4916		Units (Limits)
			Typ (3)	Limit (4)	
V_{DD}	Supply Voltage (5) (6))			0.9	V (min)
				2.5	V (max)
I_{DD}	Quiescent Power Supply Current	V_{IN} = 0V, I_O = 0A, R_L = ∞ See (7)	1.0	1.4	mA (max)
I_{SD}	Shutdown Current	$V_{SHUTDOWN}$ = GND	0.02		µA (max)
V_{OS}	Output Offset Voltage	BTL	5	50	mV (max)
P_O	Output Power (8)	f = 1kHz			
		R_L = 8Ω BTL, THD+N = 1%	85	70	mW (min)
		R_L = 16Ω SE, THD+N = 1%	14		mW
THD+N	Total Harmonic Distortion + Noise	R_L = 8Ω, BTL, P_O = 25mW, f = 1kHz	0.1	0.5	%
		R_L = 16Ω, SE, P_O = 5mW, f = 1kHz	0.2		
V_{NO}	Output Voltage Noise	20Hz to 20kHz, A-weighted	10		μV_{RMS}
I_{MUTE}	Mute Current	V_{MUTE} = 0, SE	15		µA
Crosstalk		R_L = 16Ω, SE	55		dB (min)
PSRR	Power Supply Rejection Ratio	V_{RIPPLE} = 200mV_{P-P} C_{BYPASS} = 4.7µF, R_L = 8Ω f = 1kHz, BTL	62		dB
		V_{RIPPLE} = 200mV_{P-P} sine wave C_{BYPASS} = 4.7µF, R_L = 16Ω f = 1kHz, SE	66		dB (min)
V_{IH}	Control Logic High		0.7		V (min)
V_{IL}	Control Logic Low		0.3		V (max)

(1) Absolute Maximum Ratings indicate limits beyond which damage to the device may occur. Operating Ratings indicate conditions for which the device is functional, but do not ensure specific performance limits. Electrical Characteristics state DC and AC electrical specifications under particular test conditions which ensure specific performance limits. This assumes that the device is within the Operating Ratings. Specifications are not ensured for parameters where no limit is given, however, the typical value is a good indication of device performance.
(2) All voltages are measured with respect to the ground (GND) pins unless otherwise specified.
(3) Typicals are measured at 25°C and represent the parametric norm.
(4) Datasheet min/max specification limits are specified by design, test, or statistical analysis.
(5) When operating on a power supply voltage of 0.9V, the LM4916 willl not function below 0°C. At a power supply voltage of 1V or greater, the LM4916 will operate down to -40°C.
(6) Ripple on power supply line should not exceed 400mV_{pp}.
(7) The quiescent power supply current depends on the offset voltage when a practical load is connected to the amplifier.
(8) Output power is measured at the device terminals.

Copyright © 2003–2013, Texas Instruments Incorporated

TYPICAL PERFORMANCE CHARACTERISTICS

THD+N vs Frequency V_{DD} = 1.5V, P_O = 5mW, R_L = 16Ω BW < 80kHz, Single Ended Output

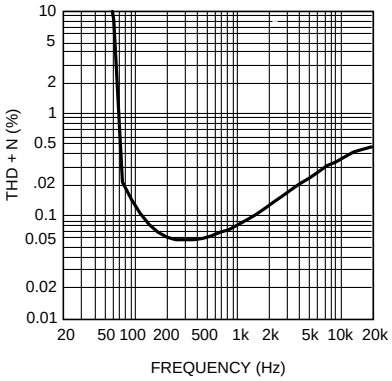

Figure 6.

THD+N vs Frequency V_{DD} = 1.5V, R_L = 8Ω, P_O = 25mW BTL Output, A_V = -1

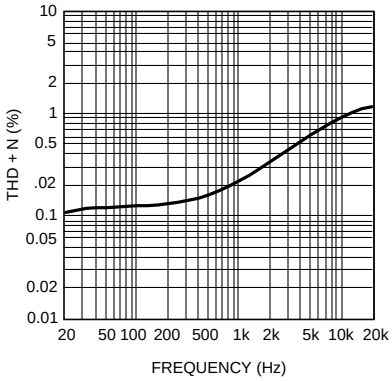

Figure 7.

THD+N vs Frequency V_{DD} = 1.2V, P_O = 5mW R_L = 16Ω, Single Ended Output, A_V = -1

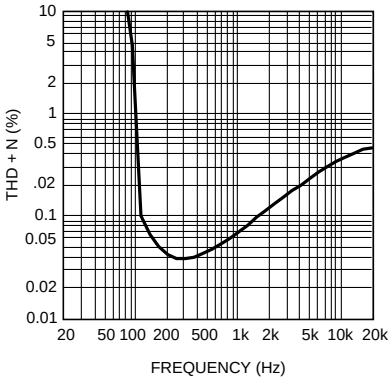

Figure 8.

THD+N vs Frequency V_{DD} = 1.2V, R_L = 8Ω, P_O = 25mW BTL Output, A_V = -1

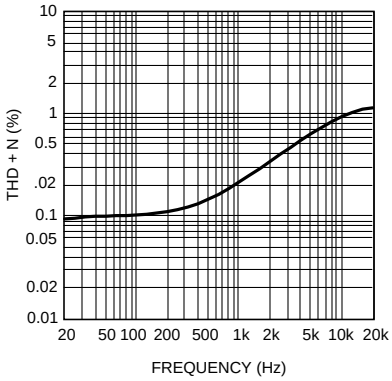

Figure 9.

THD+N vs Output Power V_{DD} = 1.5V, R_L = 16Ω, f = 1kHz Single Ended Output, A_V = -1

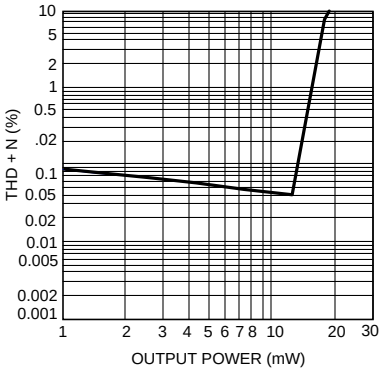

Figure 10.

THD+N vs Output Power V_{DD} = 1.5V, R_L = 8Ω, f = 1kHz BTL Output, A_V = -1

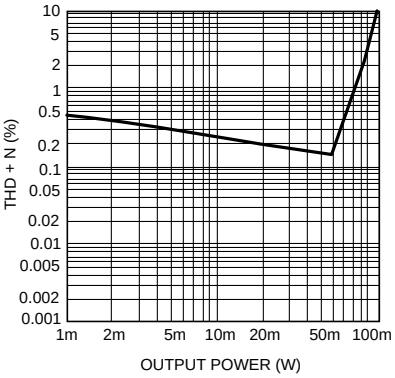

Figure 11.

TYPICAL PERFORMANCE CHARACTERISTICS (continued)

THD+N vs Output Power V_{DD} = 1.2V, R_L = 16Ω, f = 1kHz Single Ended Output, A_V = -1

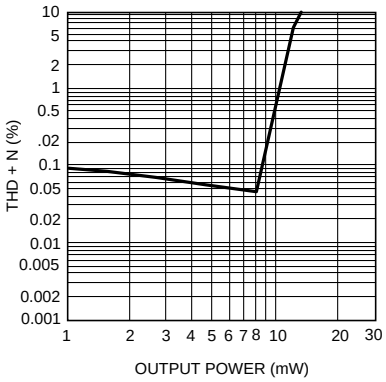

Figure 12.

THD+N vs Output Power V_{DD} = 1.2V, R_L = 8Ω, f = 1kHz BTL Output, A_V = -1

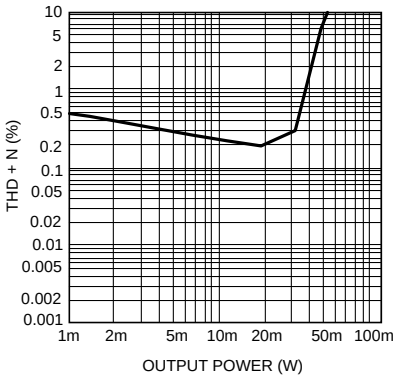

Figure 13.

Output Power vs Supply Voltage f = 1kHz, R_L = 16Ω, Single Ended Output, A_V = -1

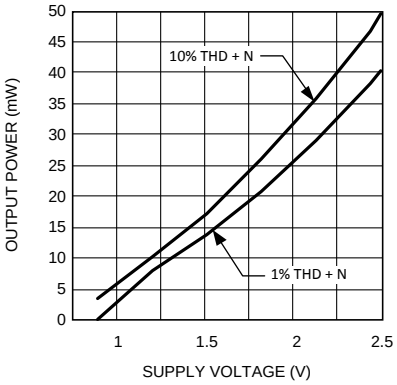

Figure 14.

Output Power vs Supply Voltage f = 1kHz, R_L = 8Ω, BTL Output, A_V = -1

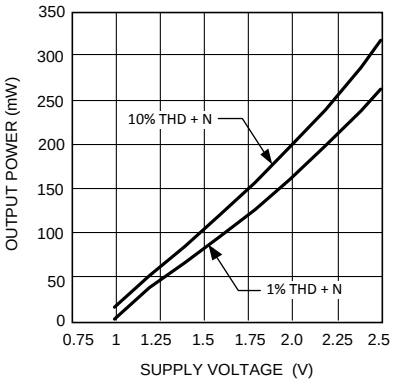

Figure 15.

Output Power vs Load Resistance V_{DD} = 1.5V, f = 1kHz Single Ended Output, A_V = -1

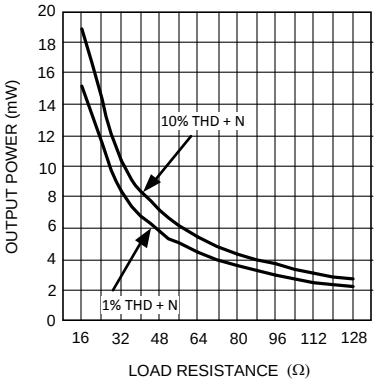

Figure 16.

Output Power vs Load Resistance V_{DD} = 1.5V, f = 1kHz BTL Output, A_V = -1

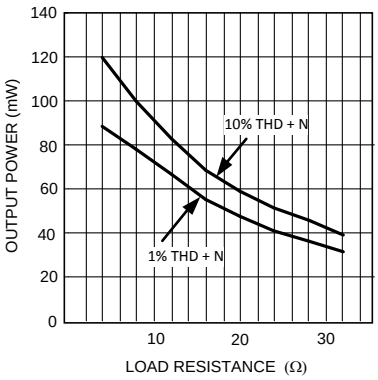

Figure 17.

Copyright © 2003–2013, Texas Instruments Incorporated

TYPICAL PERFORMANCE CHARACTERISTICS (continued)

Output Power vs Load Resistance V_{DD} = 1.2V, f = 1kHz Single Ended Output, A_V = -1

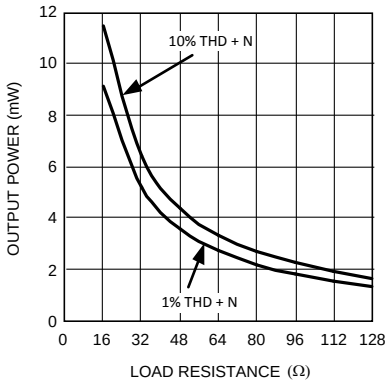

Figure 18.

Output Power vs Load Resistance V_{DD} = 1.2V, f = 1kHz BTL Output, A_V = -1

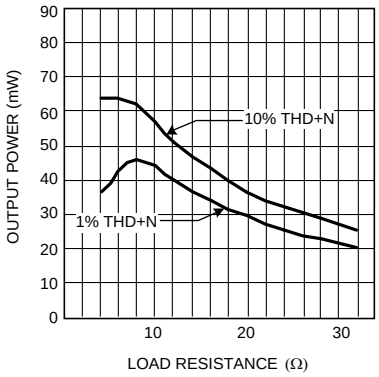

Figure 19.

Power Dissipation vs Output Power f = 1kHz, THD+N < 1%, A_V = -1 Single Ended Output, Both Channels

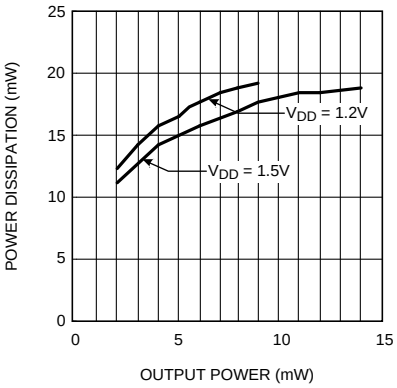

Figure 20.

Power Dissipation vs Output Power f = 1kHz, THD+N < 1% BTL Output, A_V = -1

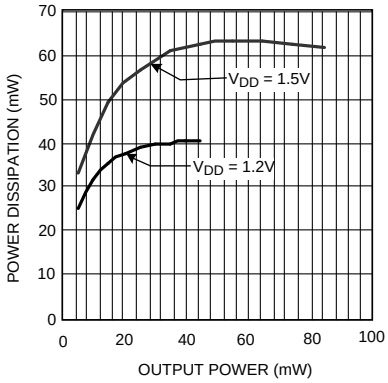

Figure 21.

Channel Separation R_L = 16Ω, P_O = 5mW Single Ended Output, A_V = -1

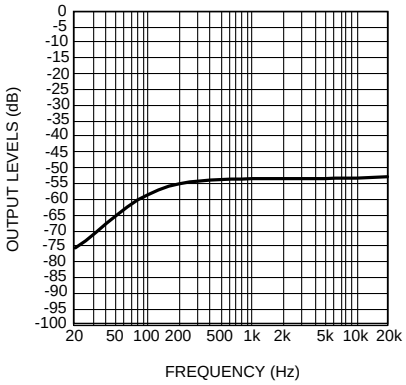

Figure 22.

Power Supply Rejection Ratio V_{DD} = 1.5V, V_{RIPPLE} = 200mV_{PP} R_L = 16Ω, Single Ended Output Input Terminated into 10Ω

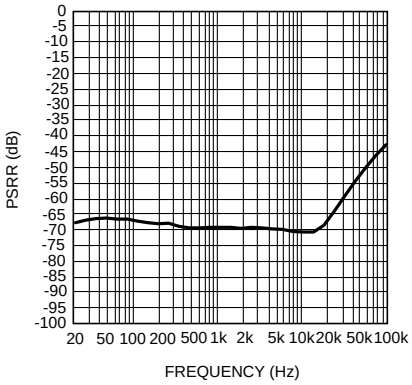

Figure 23.

TYPICAL PERFORMANCE CHARACTERISTICS (continued)

Power Supply Rejection Ratio
V_{DD} = 1.5V, V_{RIPPLE} = 200mV_{PP}
R_L = 8Ω, BTL
Input Terminated into 10Ω

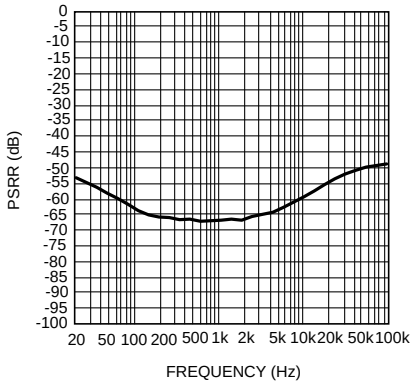

Figure 24.

Power Supply Rejection Ratio
V_{DD} = 1.2V, V_{RIPPLE} = 200mV_{PP}
R_L = 16Ω, Single Ended Output
Input Terminated into 10Ω

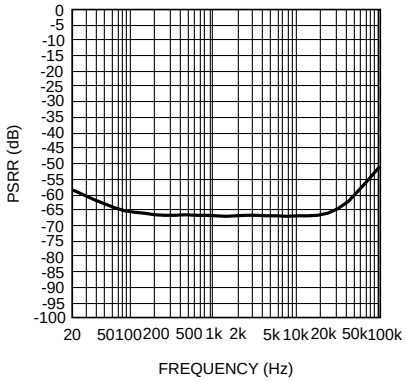

Figure 25.

Power Supply Rejection Ratio
V_{DD} = 1.2V, V_{RIPPLE} = 200mV_{PP}
R_L = 8Ω, BTL
Input Terminated into 10Ω

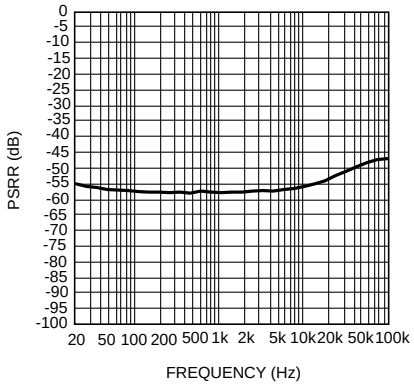

Figure 26.

Frequency Response
vs Input Capacitor Size
V_{DD} = 1.5V, R_L = 16Ω
AV = -1, BW < 80kHz, Single Ended Output

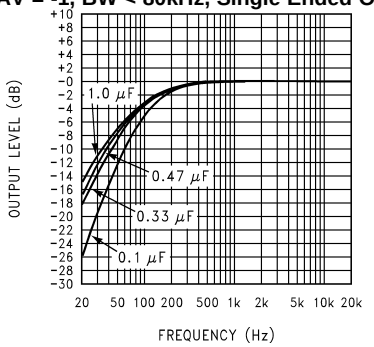

Figure 27.

Frequency Response
vs Input Capacitor Size
V_{DD} = 1.5V, R_L = 8Ω
AV = -1, BW < 80kHz, BTL Output

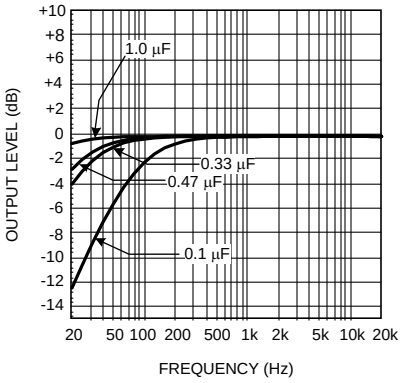

Figure 28.

Open Loop Frequency Response
VDD = 1.5V, No load

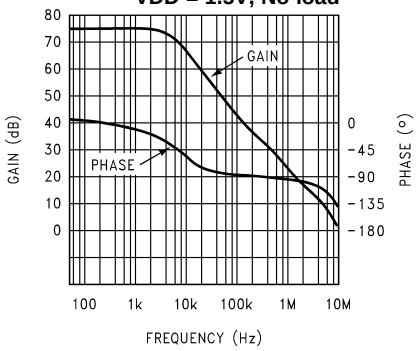

Figure 29.

Copyright © 2003–2013, Texas Instruments Incorporated

TYPICAL PERFORMANCE CHARACTERISTICS (continued)

Supply Voltage vs Supply Current

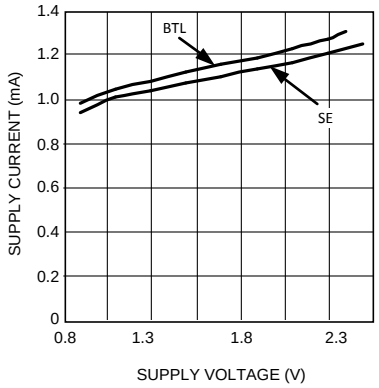

Figure 30.

Clipping Voltage vs Supply Voltage

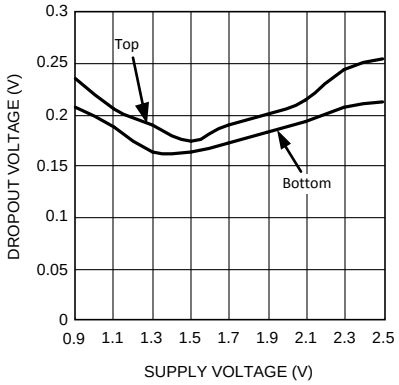

Figure 31.

Noise Floor
VDD = 1.5V, Single Ended Output
16Ω, 80kHz Bandwith

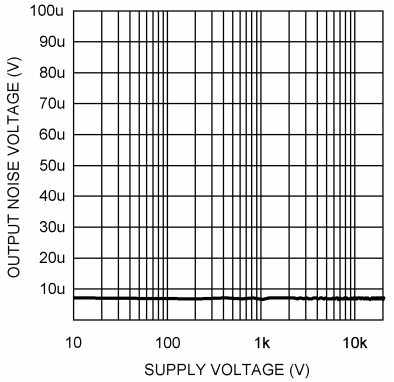

Figure 32.

Noise Floor
V_{DD} = 1.5V, BTL Output
8Ω, 80kHz Bandwith

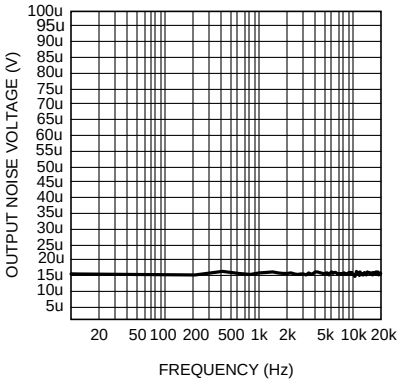

Figure 33.

Shutdown Hystresis Voltage
V_{DD} = 1.5V

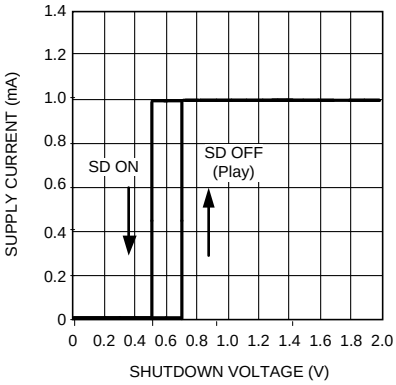

Figure 34.

Power Derating Curve
V_{DD} = 1.5V

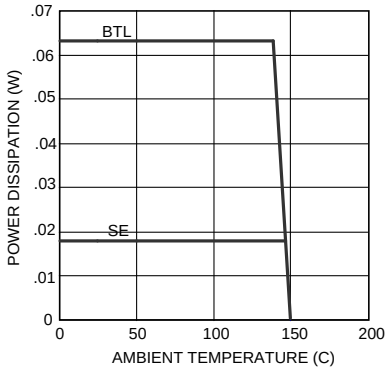

Figure 35.

TYPICAL PERFORMANCE CHARACTERISTICS (continued)

Mute Attenuation vs Load Resistance

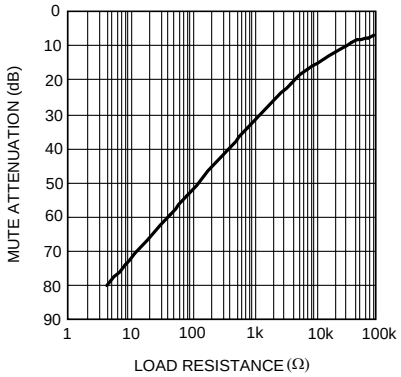

Figure 36.

Shutdown Current Distribution

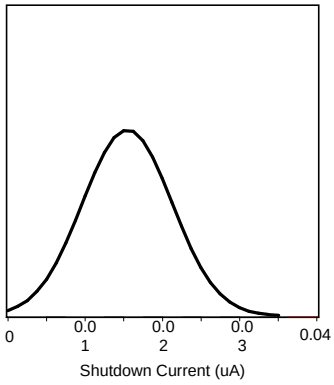

Figure 37.

Copyright © 2003–2013, Texas Instruments Incorporated

APPLICATION INFORMATION

SINGLE ENDED (SE) CONFIGURATION EXPLANATION

As shown in Figure 4, the LM4916 has two operational amplifiers internally, which have externally configurable gain. The closed loop gain of the two configurable amplifiers is set by selecting the ratio of Rf to Ri. Consequently, the gain for each channel of the IC is

$$A_{VD} = -(R_f / R_i) \quad (1)$$

When the LM4916 operates in Single Ended mode, coupling capacitors are used on each output (VoA and VoB) and the SE/BTL pin (Pin 8) is connected to ground. These output coupling capacitors blocks the half supply voltage to which the output amplifiers are typically biased and couples the audio signal to the headphones or other single-ended (SE) loads. The signal return to circuit ground is through the headphone jack's sleeve.

BRIDGED (BTL) CONFIGURATION EXPLANATION

As shown in Figure 5, the LM4916 has two internal operational amplifiers. The first amplifier's gain is externally configurable, while the second amplifier should be externally fixed in a unity-gain, inverting configuration. The closed-loop gain of the first amplifier is set by selecting the ratio of R_f to $R_i$while the second amplifier's gain should be fixed by the two external 20kΩ resistors. Figure 5 shows that the output of amplifier one serves as the input to amplifier two which results in both amplifiers producing signals identical in magnitude, but out of phase by 180°. Consequently, the differential gain for the IC is

$$A_{VD} = 2 *(R_f / R_i). \quad (2)$$

By driving the load differentially through outputs Vo1 and Vo2, an amplifier configuration commonly referred to as "bridged mode" is established. Bridged mode operation is different from the classical single-ended amplifier configuration where one side of the load is connected to ground. A bridge amplifier design has a few distinct advantages over the single-ended configuration. It provides a differential drive to the load, thus doubling output swing for a specified supply voltage. Four times the output power is possible as compared to a single-ended amplifier under the same conditions. This increase in attainable output power assumes that the amplifier is not current limited or clipped. In order to choose an amplifier's closed-loop gain without causing excessive clipping, please refer to the AUDIO POWER AMPLIFIER DESIGN section.

A bridge configuration, such as the one used in LM4916, also creates a second advantage over single-ended amplifiers. Since the differential outputs, Vo1 and Vo2, are biased at half-supply, no net DC voltage exists across the load. This eliminates the need for an output coupling capacitor which is required in a single supply, single-ended amplifier configuration.

MODE SELECT DETAIL

The LM4916 can be configured in either Single Ended or BTL mode (see Figure 4 and Figure 5). The default state of the LM4916 at power up is single ended. During initial power up or return from shutdown, the LM4916 must detect the correct mode of operation by sensing the status of the SE/BTL pin. When the bias voltage of the part ramps up to 60mV (as seen on the Bypass pin), an internal comparator detects the status of SE/BTL; and at 10mV, latches that value in place. Ramp up of the bias voltage will proceed at a different rate from this point on depending upon operating mode. BTL mode will ramp up about 11 times faster than Single Ended mode. Shutdown is not a valid command during this time period (T_{WU}) and should not enabled to ensure a proper power on reset (POR) signal. In addition, the slew rate of V_{DD} must be greater than 2.5V/ms to ensure reliable POR. Recommended power up timing is shown in Figure 39 along with proper usage of Shutdown and Mute. The mode-select circuit is suspended during C_B discharge time. The circuit shown in Figure 38 presents an applications solution to the problem of using different supply voltages with different turn-on times in a system with the LM4916. This circuit shows the LM4916 with a 25-50kΩ. Pull-up resistor connected from the shutdown pin to V_{DD}. The shutdown pin of the LM4916 is also being driven by an open drain output of an external microcontroller

Copyright © 2003–2013, Texas Instruments Incorporated

on a separate supply. This circuit ensures that shutdown is disabled when powering up the LM4916 by either allowing shutdown to be high before the LM4916 powers on (the microcontroller powers up first) or allows shutdown to ramp up with V_{DD} (the LM4916 powers up first). This will ensure the LM4916 powers up properly and enters the correct mode of operation. Please note that the $\overline{SE}$/BTL pin (Pin 8) should be tied to GND for Single Ended mode, and to V_{DD} for BTL mode.

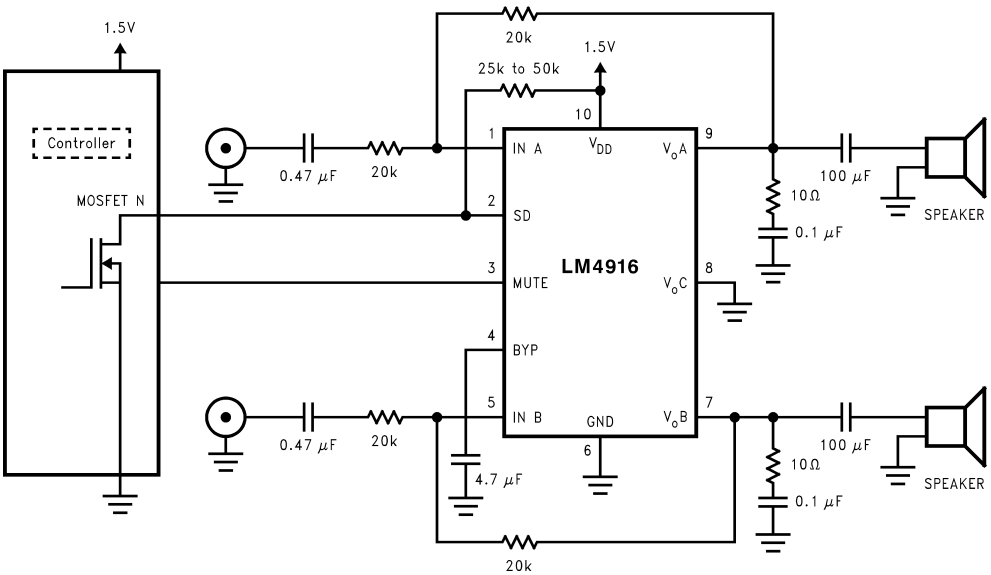

Figure 38. Recommended Circuit for Different Supply Turn-On Timing

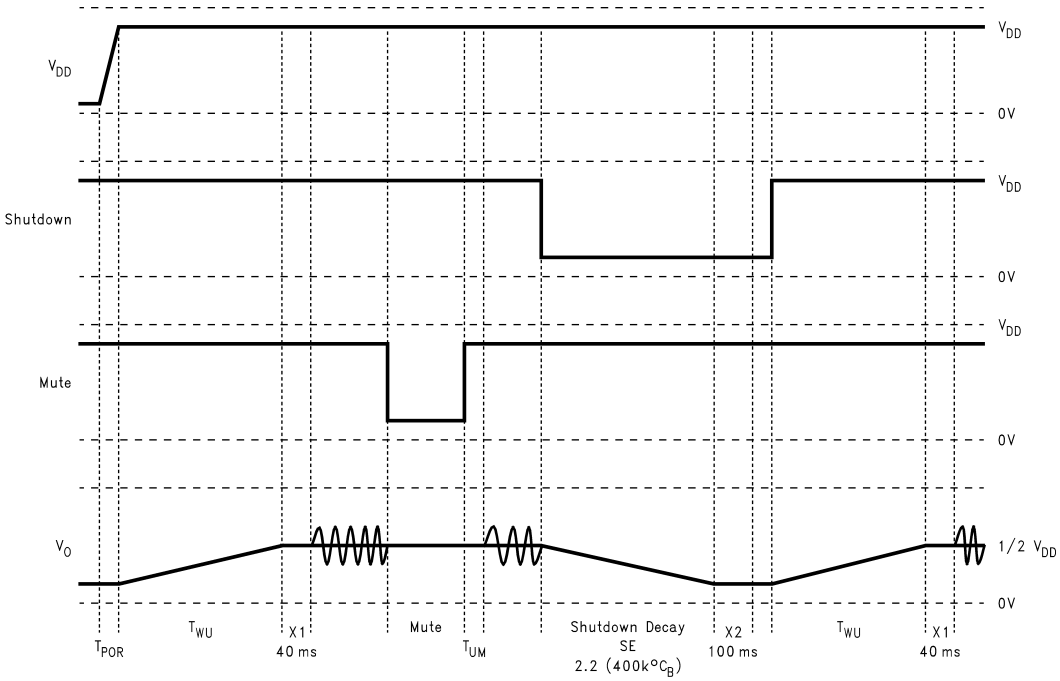

Figure 39. Turn-On, Shutdown, and Mute Timing for Cap-Coupled Mode

Copyright © 2003–2013, Texas Instruments Incorporated

POWER DISSIPATION

Power dissipation is a major concern when designing a successful amplifier, whether the amplifier is bridged or single-ended. A direct consequence of the increased power delivered to the load by a bridge amplifier is an increase in internal power dissipation. Since the LM4916 has two operational amplifiers in one package, the maximum internal power dissipation is 4 times that of a single-ended amplifier. The maximum power dissipation for a given BTL application can be derived from the power dissipation graphs or from Equation 3.

$$P_{DMAX} = 4*(V_{DD})^2 / (2\pi^2 R_L) \quad (3)$$

When operating in Single Ended mode, Equation 4 states the maximum power dissipation point for a single-ended amplifier operating at a given supply voltage and driving a specified output load.

$$P_{DMAX} = (V_{DD})^2 / (2\pi^2 R_L) \quad (4)$$

Since the LM4916 has two operational amplifiers in one package, the maximum internal power dissipation point is twice that of the number that results from Equation 4. From Equation 4, assuming a 1.5V power supply and a 16Ω load, the maximum power dissipation point is 7mW per amplifier. Thus the maximum package dissipation point is 14mW.

The maximum power dissipation point obtained from either Equation 3 or Equation 4must not be greater than the power dissipation that results from Equation 5:

$$P_{DMAX} = (T_{JMAX} - T_A) / \theta_{JA} \quad (5)$$

For package DGS0010A, θ_{JA} = 175°C/W. T_{JMAX} = 150°C for the LM4916. Depending on the ambient temperature, T_A, of the system surroundings, Equation 5 can be used to find the maximum internal power dissipation supported by the IC packaging. If the result of Equation 3 or Equation 4 is greater than that of Equation 5, then either the supply voltage must be decreased, the load impedance increased or T_A reduced. For the typical application of a 1.5V power supply, with a 16Ω load, the maximum ambient temperature possible without violating the maximum junction temperature is approximately 146°C provided that device operation is around the maximum power dissipation point. Thus, for typical applications, power dissipation is not an issue. Power dissipation is a function of output power and thus, if typical operation is not around the maximum power dissipation point, the ambient temperature may be increased accordingly. Refer to the Typical Performance Characteristics curves for power dissipation information for lower output powers.

EXPOSED-DAP PACKAGE PCB MOUNTING CONSIDERATIONS

The LM4916's exposed-DAP (die attach paddle) package (LD) provides a low thermal resistance between the die and the PCB to which the part is mounted and soldered. This allows rapid heat transfer from the die to the surrounding PCB copper traces, ground plane, and surrounding air.

The LD package should have its DAP soldered to a copper pad on the PCB. The DAP's PCB copper pad may be connected to a large plane of continuous unbroken copper. This plane forms a thermal mass, heat sink, and radiation area. Further detailed and specific information concerning PCB layout, fabrication, and mounting an LD (WSON) package is available from Texas Instruments' Package Engineering Group under application note AN-1187.

POWER SUPPLY BYPASSING

As with any amplifier, proper supply bypassing is important for low noise performance and high power supply rejection. The capacitor location on the power supply pins should be as close to the device as possible. Typical applications employ a battery (or 1.5V regulator) with 10µF tantalum or electrolytic capacitor and a ceramic bypass capacitor that aid in supply stability. This does not eliminate the need for bypassing the supply nodes of the LM4916. A bypass capacitor value in the range of 0.1µF to 1µF is recommended.

Copyright © 2003–2013, Texas Instruments Incorporated

MICRO POWER SHUTDOWN

The voltage applied to the SHUTDOWN pin controls the LM4916's shutdown function. Activate micro-power shutdown by applying a logic-low voltage to the SHUTDOWN pin. When active, the LM4916's micro-power shutdown feature turns off the amplifier's bias circuitry, reducing the supply current. The trigger point varies depending on supply voltage and is shown in the Shutdown Hysteresis Voltage graphs in the Typical Performance Characteristics section. The low 0.02µA (typ) shutdown current is achieved by applying a voltage that is as near as ground as possible to the SHUTDOWN pin. A voltage that is higher than ground may increase the shutdown current. There are a few ways to control the micro-power shutdown. These include using a single-pole, single-throw switch, a microprocessor, or a microcontroller. When using a switch, connect an external 100kΩ pull-up resistor between the SHUTDOWN pin and V_{DD}. Connect the switch between the SHUTDOWN pin and ground. Select normal amplifier operation by opening the switch. Closing the switch connects the SHUTDOWN pin to ground, activating micro-power shutdown. The switch and resistor ensure that the SHUTDOWN pin will not float. This prevents unwanted state changes. In a system with a microprocessor or microcontroller, use a digital output to apply the control voltage to the SHUTDOWN pin. Driving the SHUTDOWN pin with active circuitry eliminates the pull-up resistor.

MUTE

When in single ended mode, the LM4916 also features a mute function that enables extremely fast turn-on/turn-off with a minimum of output pop and click with a low current consumption (≤20µA, typical). The mute function leaves the outputs at their bias level, thus resulting in higher power consumption than shutdown mode, but also provides much faster turn on/off times. Providing a logic low signal on the MUTE pin enables mute mode. Threshold voltages and activation techniques match those given for the shutdown function as well. Mute may not appear to function when the LM4916 is used to drive high impedance loads. This is because the LM4916 relies on a typical headphone load (16-32Ω) to reduce input signal feed-through through the input and feedback resistors. Mute attenuation can thus be calculated by the following formula:

$$\text{Mute Attenuation (dB)} = 20\text{Log}[R_L / (R_i + R_F)]$$

Parallel load resistance may be necessary to achieve satisfactory mute levels when the application load is known to be high impedance. The mute function, described above, is not necessary when the LM4916 is operating in BTL mode since the shutdown function operates quickly in BTL mode with less power consumption than mute. In these modes, the Mute signal is equivalent to the Shutdown signal. Mute may be enabled during shutdown transitions, but should not be toggled for a brief period immediately after exiting or entering shutdown. These brief time periods are labeled X1 (time after returning from shutdown) and X2 (time after entering shutdown) and are shown in the timing diagram given in Figure 39. X1 occurs immediately following a return from shutdown (TWU) and lasts 40ms±25%. X2 occurs after the part is placed in shutdown and the decay of the bias voltage has occurred (2.2*250k*CB) and lasts for 100ms±25%. The timing of these transition periods relative to X1 and X2 is also shown in Figure 39. While in single ended mode, mute should not be toggled during these time periods, but may be toggled during the shutdown transitions or any other time the part is in normal operation. Failure to operate mute correctly may result in much higher click and pop values or failure of the device to mute at all.

PROPER SELECTION OF EXTERNAL COMPONENTS

Proper selection of external components in applications using integrated power amplifiers is critical to optimize device and system performance. While the LM4916 is tolerant of external component combinations, consideration to component values must be used to maximize overall system quality. The LM4916 is unity-gain stable that gives the designer maximum system flexibility. The LM4916 should be used in low gain configurations to minimize THD+N values, and maximize the signal to noise ratio. Low gain configurations require large input signals to obtain a given output power. Input signals equal to or greater than $1V_{rms}$ are available from sources such as audio codecs. Very large values should not be used for the gain-setting resistors. Values for R_i and R_f should be less than 1MΩ. Please refer to the section, AUDIO POWER AMPLIFIER DESIGN, for a more complete explanation of proper gain selection. Besides gain, one of the major considerations is the closed-loop bandwidth of the amplifier. To a large extent, the bandwidth is dictated by the choice of external components shown in Figure 4 and Figure 5. The input coupling capacitor, C_i, forms a first order high pass filter that limits low frequency response. This value should be chosen based on needed frequency response and turn-on time.

 Copyright © 2003–2013, Texas Instruments Incorporated

SELECTION OF INPUT CAPACITOR SIZE

Amplifying the lowest audio frequencies requires a high value input coupling capacitor, C_i. A high value capacitor can be expensive and may compromise space efficiency in portable designs. In many cases, however, the headphones used in portable systems have little ability to reproduce signals below 60Hz. Applications using headphones with this limited frequency response reap little improvement by using a high value input capacitor. In addition to system cost and size, turn on time is affected by the size of the input coupling capacitor C_i. A larger input coupling capacitor requires more charge to reach its quiescent DC voltage. This charge comes from the output via the feedback. Thus, by minimizing the capacitor size based on necessary low frequency response, turn-on time can be minimized. A small value of C_i (in the range of 0.1µF to 0.47µF), is recommended.

Bypass Capacitor Value Selection

Besides minimizing the input capacitor size, careful consideration should be paid to value of C_B, the capacitor connected to the BYPASS pin. Since C_B determines how fast the LM4916 settles to quiescent operation, its value is critical when minimizing turn-on pops. The slower the LM4916's outputs ramp to their quiescent DC voltage (nominally $V_{DD}/2$), the smaller the turn-on pop. Choosing C_B equal to 4.7µF along with a small value of C_i (in the range of 0.1µF to 0.47µF), produces a click-less and pop-less shutdown function. As discussed above, choosing C_i no larger than necessary for the desired bandwidth helps minimize clicks and pops. This ensures that output transients are eliminated when power is first applied or the LM4916 resumes operation after shutdown.

Minimizing External Components

Operating the LM4916 at higher gain settings can minimize the use of external components. For instance, a BTL configuration with a gain setting greater than 8V/V ($A_V > 8$) makes the output capacitor C_O unnecessary. For the Single Ended configuration, a gain setting greater than 4V/V ($A_V > 4$) eliminates the need for output capacitor C_{O2} and output resistor R_O, on each output channel.

If the LM4916 is operating with a lower gain setting ($A_V < 4$), external components can be further minimized only in Single Ended mode. For each channel, output capacitor (C_{O2}) and output resistor (R_O) can be eliminated. These components need to be compensated for by adding a 7.5kΩ resistor (R_C) between the input pin and ground pin on each channel (between Pin 1 and GND, and between Pin 5 and GND).

OPTIMIZING CLICK AND POP REDUCTION PERFORMANCE

The LM4916 contains circuitry that eliminates turn-on and shutdown transients ("clicks and pops"). For this discussion, turn-on refers to either applying the power supply voltage or when the micro-power shutdown mode is deactivated.

As the $V_{DD}/2$ voltage present at the BYPASS pin ramps to its final value, the LM4916's internal amplifiers are configured as unity gain buffers. An internal current source charges the capacitor connected between the BYPASS pin and GND in a controlled, linear manner. Ideally, the input and outputs track the voltage applied to the BYPASS pin. The gain of the internal amplifiers remains unity until the voltage on the bypass pin reaches $V_{DD}/2$. As soon as the voltage on the bypass pin is stable, the device becomes fully operational and the amplifier outputs are reconnected to their respective output pins. Although the BYPASS pin current cannot be modified, changing the size of C_B alters the device's turn-on time. There is a linear relationship between the size of C_B and the turn-on time. Here are some typical turn-on times for various values of C_B:

Table 1. Single-Ended

C_B(µF)	T_{ON}
0.1	117ms
0.22	179ms
0.47	310ms
1.0	552ms
2.2	1.14s
4.7	2.4s

Copyright © 2003–2013, Texas Instruments Incorporated

Table 2. BTL

C_B(µF)	T_{ON} (ms)
0.1	72
0.22	79
0.47	89
1.0	112
2.2	163
4.7	283

In order to eliminate "clicks and pops", all capacitors must be discharged before turn-on. Rapidly switching V_{DD} may not allow the capacitors to fully discharge, which may cause "clicks and pops".

AUDIO POWER AMPLIFIER DESIGN

A 25mW/32Ω Audio Amplifier

Given:	
Power Output	10mWrms
Load Impedance	16Ω
Input Level	0.4Vrms
Input Impedance	20kΩ

A designer must first choose a mode of operation (SE or BTL) and determine the minimum supply rail to obtain the specified output power. By extrapolating from the Output Power vs. Supply Voltage graphs in the Typical Performance Characteristics section, the supply rail can be easily found. 1.5V is a standard voltage in most applications, it is chosen for the supply rail. Extra supply voltage creates headroom that allows the LM4916 to reproduce peak in excess of 10mW without producing audible distortion. At this time, the designer must make sure that the power supply choice along with the output impedance does not violate the conditions explained in the Power Dissipation section. Once the power dissipation equations have been addressed, the required gain can be determined from Equation 6.

$$A_V \geq \sqrt{(P_O R_L)}/(V_{IN}) = V_{orms}/V_{inrms} \tag{6}$$

From Equation 6, the minimum AV is 1; use $A_V = 1$. Since the desired input impedance is 20k, and with a A_V gain of 1, a ratio of 1:1 results from Equation 3 for R_f to R. The values are chosen with R_i = 20k and R_f = 20k. The final design step is to address the bandwidth requirements which must be stated as a pair of -3dB frequency points. Five times away from a -3dB point is 0.17dB down from passband response which is better than the required ± 0.25dB specified.

f_L = 100Hz/5 = 20Hz

f_H = 20kHz * 5 = 100kHz

As stated in the **Proper Selection of External Components** section, R_i in conjunction with C_i creates a

$C_i \geq 1 / (2\pi * 20k\Omega * 20Hz) = 0.397\mu F$; use 0.39µF.

Copyright © 2003–2013, Texas Instruments Incorporated

The high frequency pole is determined by the product of the desired frequency pole, fH, and the differential gain, A_V. With an AV_V = 1 and f_H = 100kHz, the resulting GBWP = 100kHz which is much smaller than the LM4916 GBWP of 3MHz. This example displays that if a designer has a need to design an amplifier with higher differential gain, the LM4916 can still be used without running into bandwidth limitations.

Revision History

Rev	Date	Description
1.0	7/11/03	Re-released the D/S to the WEB.
1.1	7/25/06	Deleted the RL labels on curves E5, E6, E3, and E4, per Allan S., then re-released the D/S to the WEB.
E	5/03/13	Changed layout of National Data Sheet to TI format.

Copyright © 2003–2013, Texas Instruments Incorporated

PACKAGING INFORMATION

Orderable Device	Status (1)	Package Type	Package Drawing	Pins	Package Qty	Eco Plan (2)	Lead/Ball Finish	MSL Peak Temp (3)	Op Temp (°C)	Device Marking (4/5)	Samples
LM4916LD/NOPB	ACTIVE	WSON	NGY	10	1000	Green (RoHS & no Sb/Br)	CU SN	Level-3-260C-168 HR	-40 to 85	L4916	Samples
LM4916LDX/NOPB	ACTIVE	WSON	NGY	10	4500	Green (RoHS & no Sb/Br)	CU SN	Level-3-260C-168 HR	-40 to 85	L4916	Samples
LM4916MM/NOPB	ACTIVE	VSSOP	DGS	10	1000	Green (RoHS & no Sb/Br)	CU SN	Level-1-260C-UNLIM	-40 to 85	GA9	Samples

(1) The marketing status values are defined as follows:
ACTIVE: Product device recommended for new designs.
LIFEBUY: TI has announced that the device will be discontinued, and a lifetime-buy period is in effect.
NRND: Not recommended for new designs. Device is in production to support existing customers, but TI does not recommend using this part in a new design.
PREVIEW: Device has been announced but is not in production. Samples may or may not be available.
OBSOLETE: TI has discontinued the production of the device.

(2) Eco Plan - The planned eco-friendly classification: Pb-Free (RoHS), Pb-Free (RoHS Exempt), or Green (RoHS & no Sb/Br) - please check http://www.ti.com/productcontent for the latest availability information and additional product content details.
TBD: The Pb-Free/Green conversion plan has not been defined.
Pb-Free (RoHS): TI's terms "Lead-Free" or "Pb-Free" mean semiconductor products that are compatible with the current RoHS requirements for all 6 substances, including the requirement that lead not exceed 0.1% by weight in homogeneous materials. Where designed to be soldered at high temperatures, TI Pb-Free products are suitable for use in specified lead-free processes.
Pb-Free (RoHS Exempt): This component has a RoHS exemption for either 1) lead-based flip-chip solder bumps used between the die and package, or 2) lead-based die adhesive used between the die and leadframe. The component is otherwise considered Pb-Free (RoHS compatible) as defined above.
Green (RoHS & no Sb/Br): TI defines "Green" to mean Pb-Free (RoHS compatible), and free of Bromine (Br) and Antimony (Sb) based flame retardants (Br or Sb do not exceed 0.1% by weight in homogeneous material)

(3) MSL, Peak Temp. -- The Moisture Sensitivity Level rating according to the JEDEC industry standard classifications, and peak solder temperature.

(4) There may be additional marking, which relates to the logo, the lot trace code information, or the environmental category on the device.

(5) Multiple Device Markings will be inside parentheses. Only one Device Marking contained in parentheses and separated by a "~" will appear on a device. If a line is indented then it is a continuation of the previous line and the two combined represent the entire Device Marking for that device.

Important Information and Disclaimer: The information provided on this page represents TI's knowledge and belief as of the date that it is provided. TI bases its knowledge and belief on information provided by third parties, and makes no representation or warranty as to the accuracy of such information. Efforts are underway to better integrate information from third parties. TI has taken and continues to take reasonable steps to provide representative and accurate information but may not have conducted destructive testing or chemical analysis on incoming materials and chemicals. TI and TI suppliers consider certain information to be proprietary, and thus CAS numbers and other limited information may not be available for release.

In no event shall TI's liability arising out of such information exceed the total purchase price of the TI part(s) at issue in this document sold by TI to Customer on an annual basis.

TAPE AND REEL INFORMATION

REEL DIMENSIONS

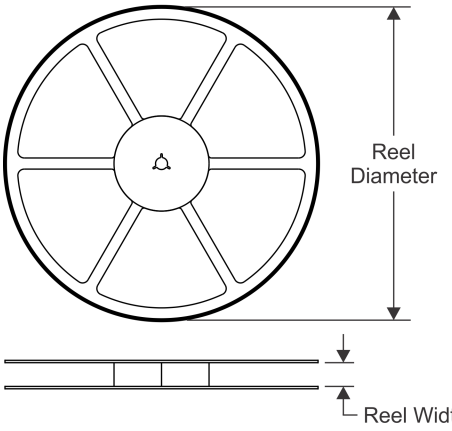

TAPE DIMENSIONS

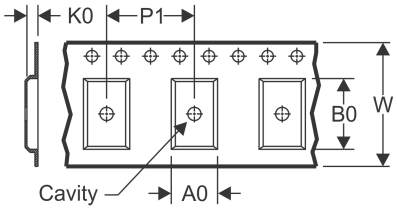

A0	Dimension designed to accommodate the component width
B0	Dimension designed to accommodate the component length
K0	Dimension designed to accommodate the component thickness
W	Overall width of the carrier tape
P1	Pitch between successive cavity centers

QUADRANT ASSIGNMENTS FOR PIN 1 ORIENTATION IN TAPE

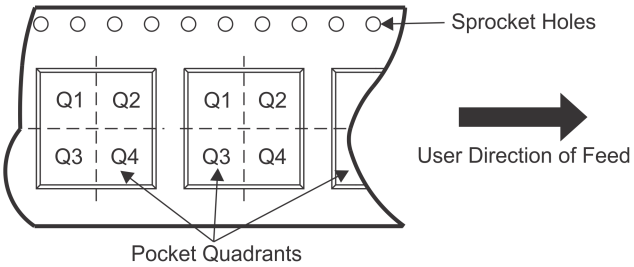

*All dimensions are nominal

Device	Package Type	Package Drawing	Pins	SPQ	Reel Diameter (mm)	Reel Width W1 (mm)	A0 (mm)	B0 (mm)	K0 (mm)	P1 (mm)	W (mm)	Pin1 Quadrant
LM4916LD/NOPB	WSON	NGY	10	1000	178.0	12.4	3.3	3.3	1.0	8.0	12.0	Q1
LM4916LDX/NOPB	WSON	NGY	10	4500	330.0	12.4	3.3	3.3	1.0	8.0	12.0	Q1
LM4916MM/NOPB	VSSOP	DGS	10	1000	178.0	12.4	5.3	3.4	1.4	8.0	12.0	Q1

TAPE AND REEL BOX DIMENSIONS

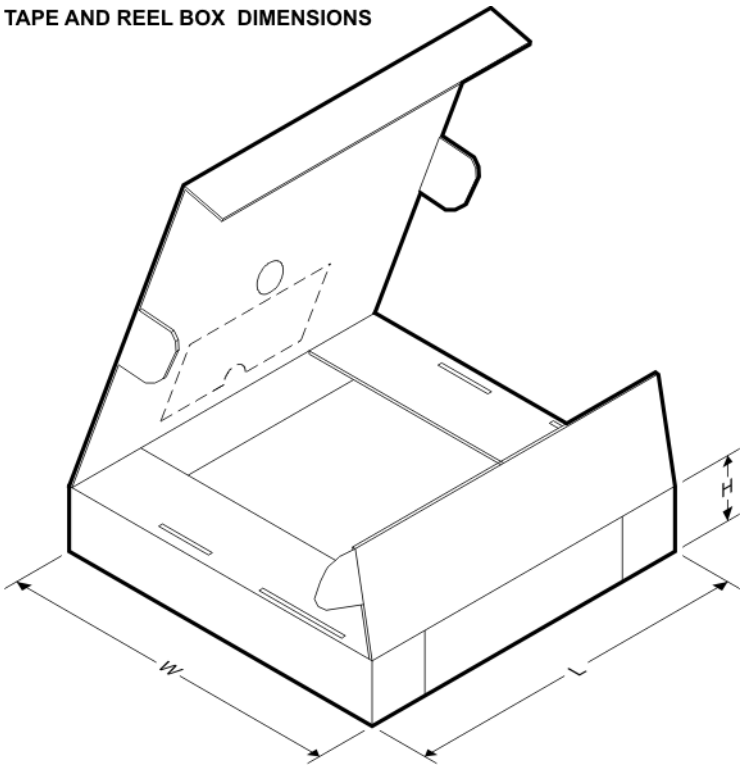

*All dimensions are nominal

Device	Package Type	Package Drawing	Pins	SPQ	Length (mm)	Width (mm)	Height (mm)
LM4916LD/NOPB	WSON	NGY	10	1000	213.0	191.0	55.0
LM4916LDX/NOPB	WSON	NGY	10	4500	367.0	367.0	35.0
LM4916MM/NOPB	VSSOP	DGS	10	1000	210.0	185.0	35.0

DGS (S–PDSO–G10) PLASTIC SMALL–OUTLINE PACKAGE

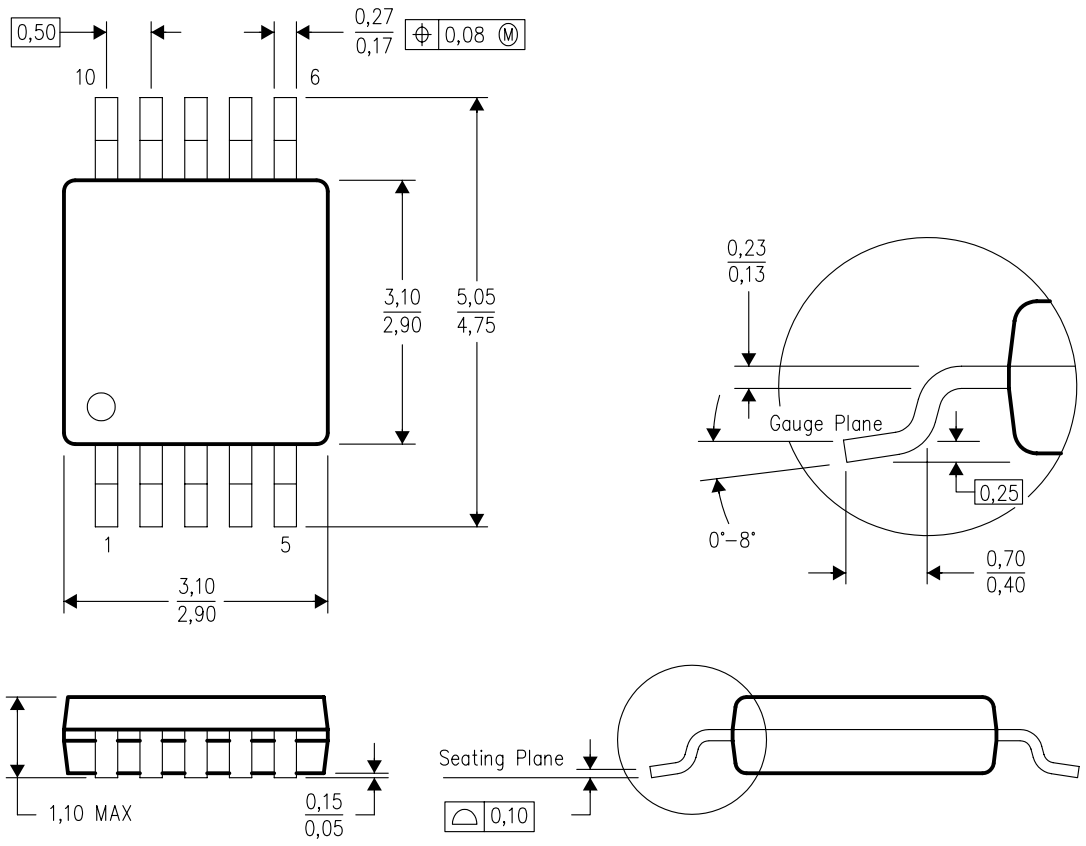

4073272/C 02/04

NOTES:
A. All linear dimensions are in millimeters.
B. This drawing is subject to change without notice.
C. Body dimensions do not include mold flash or protrusion.
D. Falls within JEDEC MO–187 variation BA.

NGY0010A

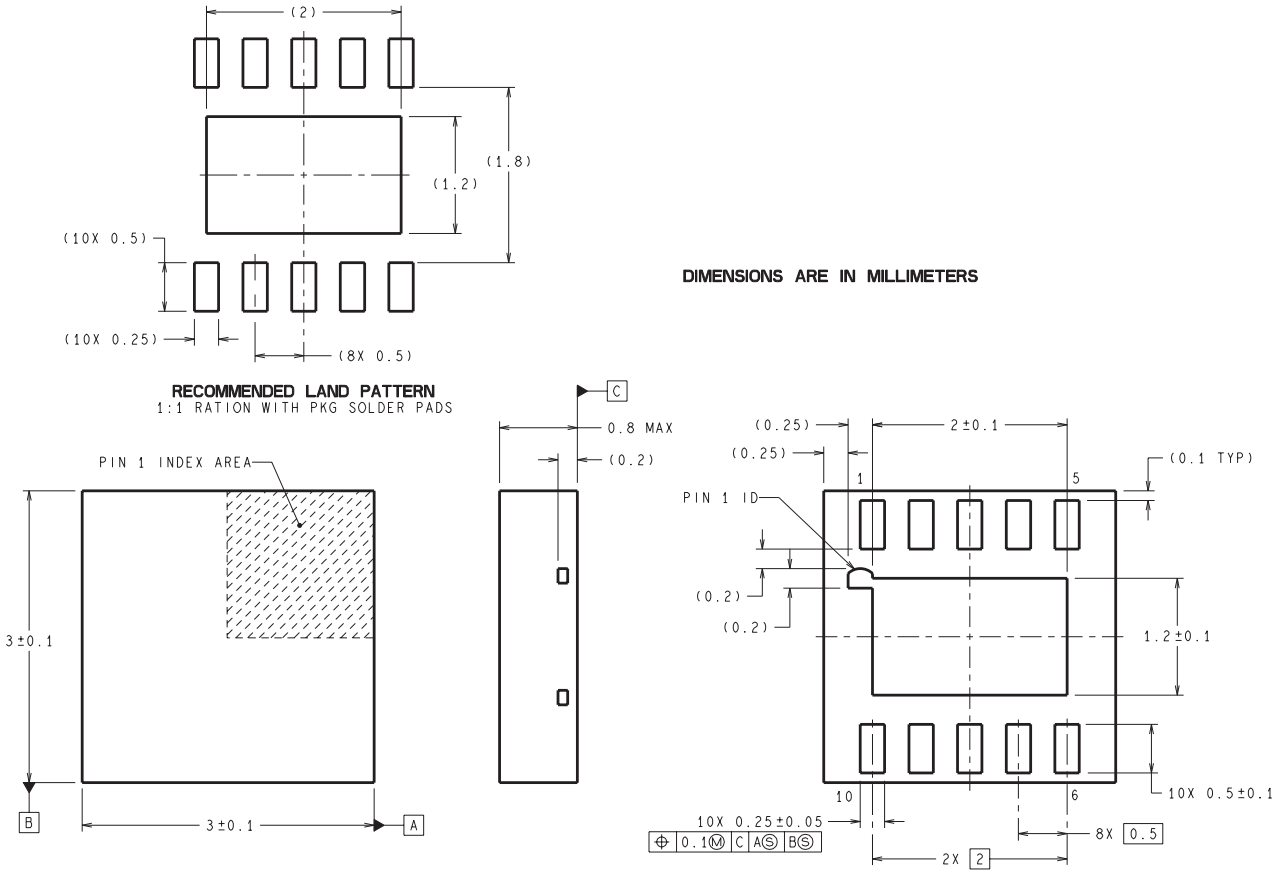

LDA10A (Rev B)

IMPORTANT NOTICE

Texas Instruments Incorporated and its subsidiaries (TI) reserve the right to make corrections, enhancements, improvements and other changes to its semiconductor products and services per JESD46, latest issue, and to discontinue any product or service per JESD48, latest issue. Buyers should obtain the latest relevant information before placing orders and should verify that such information is current and complete. All semiconductor products (also referred to herein as “components”) are sold subject to TI’s terms and conditions of sale supplied at the time of order acknowledgment.

TI warrants performance of its components to the specifications applicable at the time of sale, in accordance with the warranty in TI’s terms and conditions of sale of semiconductor products. Testing and other quality control techniques are used to the extent TI deems necessary to support this warranty. Except where mandated by applicable law, testing of all parameters of each component is not necessarily performed.

TI assumes no liability for applications assistance or the design of Buyers’ products. Buyers are responsible for their products and applications using TI components. To minimize the risks associated with Buyers’ products and applications, Buyers should provide adequate design and operating safeguards.

TI does not warrant or represent that any license, either express or implied, is granted under any patent right, copyright, mask work right, or other intellectual property right relating to any combination, machine, or process in which TI components or services are used. Information published by TI regarding third-party products or services does not constitute a license to use such products or services or a warranty or endorsement thereof. Use of such information may require a license from a third party under the patents or other intellectual property of the third party, or a license from TI under the patents or other intellectual property of TI.

Reproduction of significant portions of TI information in TI data books or data sheets is permissible only if reproduction is without alteration and is accompanied by all associated warranties, conditions, limitations, and notices. TI is not responsible or liable for such altered documentation. Information of third parties may be subject to additional restrictions.

Resale of TI components or services with statements different from or beyond the parameters stated by TI for that component or service voids all express and any implied warranties for the associated TI component or service and is an unfair and deceptive business practice. TI is not responsible or liable for any such statements.

Buyer acknowledges and agrees that it is solely responsible for compliance with all legal, regulatory and safety-related requirements concerning its products, and any use of TI components in its applications, notwithstanding any applications-related information or support that may be provided by TI. Buyer represents and agrees that it has all the necessary expertise to create and implement safeguards which anticipate dangerous consequences of failures, monitor failures and their consequences, lessen the likelihood of failures that might cause harm and take appropriate remedial actions. Buyer will fully indemnify TI and its representatives against any damages arising out of the use of any TI components in safety-critical applications.

In some cases, TI components may be promoted specifically to facilitate safety-related applications. With such components, TI’s goal is to help enable customers to design and create their own end-product solutions that meet applicable functional safety standards and requirements. Nonetheless, such components are subject to these terms.

No TI components are authorized for use in FDA Class III (or similar life-critical medical equipment) unless authorized officers of the parties have executed a special agreement specifically governing such use.

Only those TI components which TI has specifically designated as military grade or “enhanced plastic” are designed and intended for use in military/aerospace applications or environments. Buyer acknowledges and agrees that any military or aerospace use of TI components which have ***not*** been so designated is solely at the Buyer's risk, and that Buyer is solely responsible for compliance with all legal and regulatory requirements in connection with such use.

TI has specifically designated certain components as meeting ISO/TS16949 requirements, mainly for automotive use. In any case of use of non-designated products, TI will not be responsible for any failure to meet ISO/TS16949.

Products		**Applications**	
Audio	www.ti.com/audio	Automotive and Transportation	www.ti.com/automotive
Amplifiers	amplifier.ti.com	Communications and Telecom	www.ti.com/communications
Data Converters	dataconverter.ti.com	Computers and Peripherals	www.ti.com/computers
DLP® Products	www.dlp.com	Consumer Electronics	www.ti.com/consumer-apps
DSP	dsp.ti.com	Energy and Lighting	www.ti.com/energy
Clocks and Timers	www.ti.com/clocks	Industrial	www.ti.com/industrial
Interface	interface.ti.com	Medical	www.ti.com/medical
Logic	logic.ti.com	Security	www.ti.com/security
Power Mgmt	power.ti.com	Space, Avionics and Defense	www.ti.com/space-avionics-defense
Microcontrollers	microcontroller.ti.com	Video and Imaging	www.ti.com/video
RFID	www.ti-rfid.com		
OMAP Applications Processors	www.ti.com/omap	**TI E2E Community**	e2e.ti.com
Wireless Connectivity	www.ti.com/wirelessconnectivity		

Mailing Address: Texas Instruments, Post Office Box 655303, Dallas, Texas 75265
Copyright © 2013, Texas Instruments Incorporated