LM48861 Boomer® Audio Power Amplifier Series Ground-Referenced, Ultra Low Noise, Stereo Headphone Amplifier

Check for Samples: LM48861, LM48861TMBD

FEATURES

- **Ground Referenced Outputs – Eliminates Output Coupling Capacitors**
- **Common-Mode Sensing**
- **Advanced Click-and-Pop Suppression**
- **Low Supply Current**
- **Minimum External Components**
- **Micro-Power Shutdown**
- **ESD Protection of 8kV HBM Contact**
- **Available in Space-Saving 12-Bump DSBGA Package**

APPLICATIONS

- **Mobile Phones**
- **Portable Electronic Devices**
- **MP3 Players**

KEY SPECIFICATIONS

- **Output Power/Channel at V_{DD} = 1.5V,THD+N = 1%**
  - **R_L = 16Ω 12mW (typ)**
  - **R_L = 32Ω 13mW (typ)**
- **Output Power/Channel at V_{DD} = 1.8V, THD+N = 1%**
  - **R_L = 16Ω 24mW (typ)**
  - **R_L = 32Ω 22mW (typ)**
- **Quiescent Power Supply Current at 1.5V 2mA (typ)**
- **PSRR at 217Hz 83dB (typ)**
- **Shutdown Current 0.01µA (typ)**

DESCRIPTION

The LM48861 is a single supply, ground-referenced stereo headphone amplifier. Part of TI's PowerWise™ product family, the LM48861 consumes only 3mW of power, yet still provides great audio performance. The ground-referenced architecture eliminates the larger DC blocking capacitors required by traditional headphone amplifier's saving board space and reducing cost.

The LM48861 features common-mode sensing that corrects for any differences between the amplifier ground and the potential at the headphone return terminal, minimizing noise created by any ground mismatches.

The LM48861 delivers 22mW/channel into a 32Ω load with <1% THD+N with a 1.8V supply. Power supply requirements allow operation from 1.2V to 2.8V. High power supply rejection ratio (PSRR), 83dB at 217Hz, allows the device to operate in noisy environments without additional power supply conditioning. A low power shutdown mode reduces supply current consumption to 0.01µA.

Superior click and pop suppression eliminates audible transients on power-up/down and during shutdown. The LM48861 is available in an ultra-small 12-bump, 0.4mm pitch, DSBGA package (1.215mm x 1.615mm).

Please be aware that an important notice concerning availability, standard warranty, and use in critical applications of Texas Instruments semiconductor products and disclaimers thereto appears at the end of this data sheet.

PowerWise is a trademark of Texas Instruments.
All other trademarks are the property of their respective owners.

PRODUCTION DATA information is current as of publication date. Products conform to specifications per the terms of the Texas Instruments standard warranty. Production processing does not necessarily include testing of all parameters.

Copyright © 2008–2013, Texas Instruments Incorporated

Typical Application

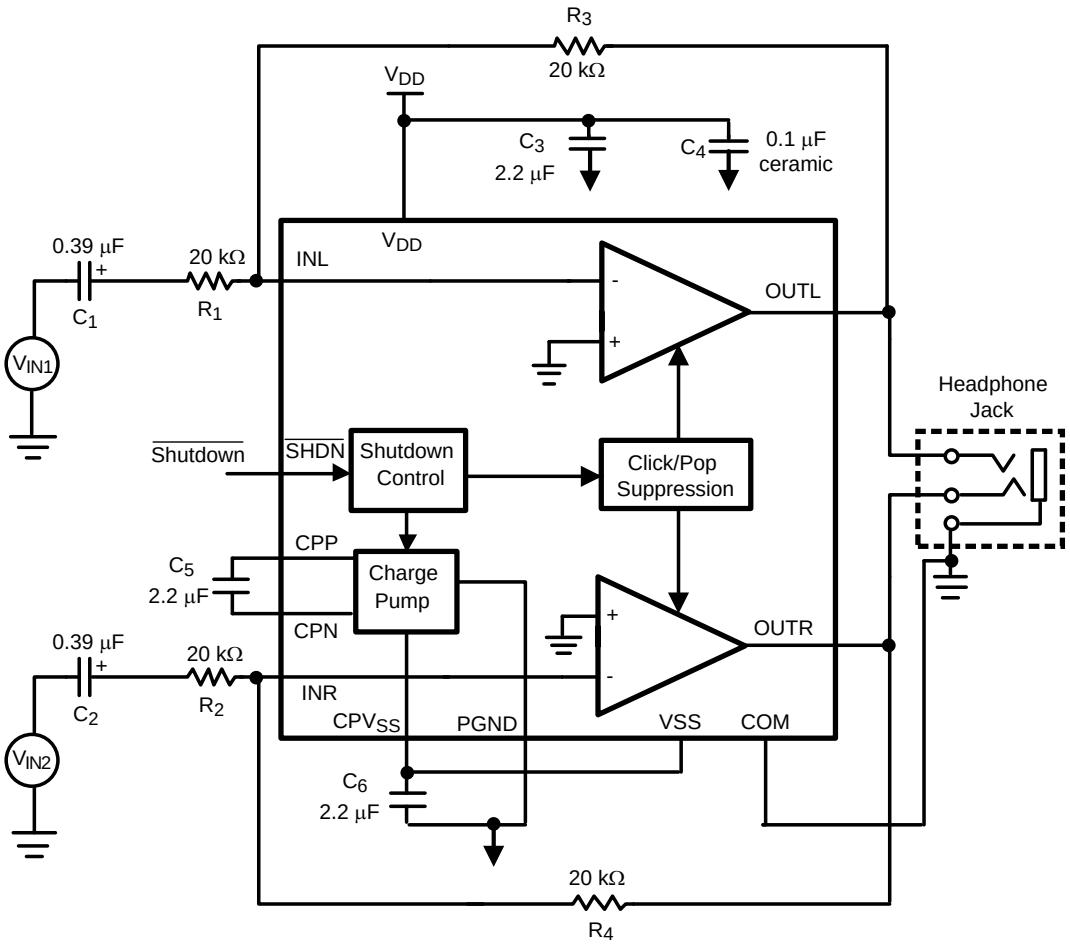

Figure 1. Typical Audio Amplifier Application Circuit

Copyright © 2008–2013, Texas Instruments Incorporated

Connection Diagrams

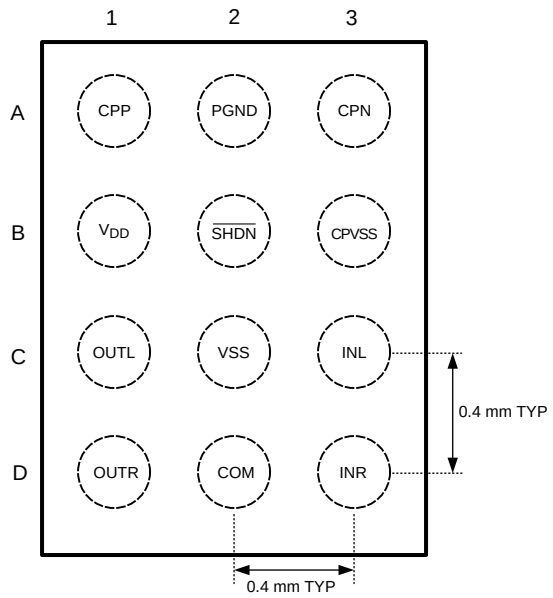

Figure 2. YFQ Package
1.215mm x 1.615mm x 0.6mm
Top View
See Package Number YFQ0012AAA

BUMP DESCRIPTION

Bump	Name	Description
A1	CPP	Charge Pump Flying Capacitor Positive Terminal
A2	PGND	Power Ground
A3	CPN	Charge Pump Flying Capacitor Negative Terminal
B1	V_{DD}	Positive Power Supply
B2	$\overline{SHDN}$	Active Low Shutdown
B3	CPV_{SS}	Charge Pump Output
C1	OUTL	Left Channel Output
C2	V_{SS}	Negative Power Supply
C3	INL	Left Channel Input
D1	OUTR	Right Channel Output
D2	COM	Ground reference for inputs and HP
D3	INR	Right Channel Input

These devices have limited built-in ESD protection. The leads should be shorted together or the device placed in conductive foam during storage or handling to prevent electrostatic damage to the MOS gates.

Absolute Maximum Ratings[1][2][3]

Supply Voltage[1]		3V
Storage Temperature		−65°C to +150°C
Input Voltage		-0.3V to V_{DD} + 0.3V
Power Dissipation[4]		Internally Limited
ESD Ratings (HBM)[5]		2000V
ESD Ratings(OUTL, OUTR)[5]		8000V
ESD Susceptibility (Machine Model)[6]		200V
Junction Temperature		150°C
Thermal Resistance	θ_{JA} (YFQ)	70°C/W (typ)

(1) *"Absolute Maximum Ratings"* indicate limits beyond which damage to the device may occur, including inoperability and degradation of device reliability and/or performance. Functional operation of the device and/or non-degradation at the *Absolute Maximum Ratings*Ratings or other conditions beyond those indicated in the *Recommended Operating Conditions* is not implied. The *Recommended Operating Conditions* indicate conditions at which the device is functional and the device should not be operated beyond such conditions. All voltages are measured with respect to the ground pin, unless otherwise specified

(2) The *Electrical Characteristics* tables list ensured specifications under the listed *Recommended Operating Conditions* except as otherwise modified or specified by the *Electrical Characteristics Conditions* and/or Notes. Typical specifications are estimations only and are not ensured.

(3) If Military/Aerospace specified devices are required, please contact the TI Sales Office/ Distributors for availability and specifications.

(4) Maximum allowable power dissipation is $P_{DMAX} = (T_{JMAX} - T_A) / \theta_{JA}$ or the number given in *Absolute Maximum Ratings*, whichever is lower.

(5) Human body model, applicable std. JESD22-A114C.

(6) Machine model, applicable std. JESD22-A115-A.

Operating Ratings

Temperature Range $T_{MIN} \le T_A \le T_{MAX}$	−40°C ≤ T_A ≤ +85°C
Supply Voltage (V_{DD})	1.2V ≤ V_{DD} ≤ 2.8V

Copyright © 2008–2013, Texas Instruments Incorporated

Electrical Characteristics V_{DD} = 1.5V(1)(2)

The following specifications apply for V_{DD} = 1.5V, A_V = –1V/V, R_L = 32kΩ, f = 1kHz, unless otherwise specified. Limits apply for T_A = 25°C.

Symbol	Parameter	Conditions	LM48861		Units (Limits)
			Typical(3)	Limit(4)	
I_{DD}	Quiescent Power Supply Current	V_{IN} = 0V, Both channels enabled	2	2.8	mA (max)
I_{SD}	Shutdown Current	Shutdown Enabled $V_{\overline{SHDN}}$ = GND	0.01	1.5	µA (max)
V_{OS}	Output Offset Voltage	V_{IN} = 0V, R_L = 32Ω Both channels enabled	0.5	1.5	mV (max)
V_{IH}	Shutdown Input Voltage High			1.4	V(min)
V_{IL}	Shutdown Input Voltage Low			0.4	V(max)
T_{WU}	Wake Up Time		500	700	µs (max)
P_O	Output Power	THD+N = 1% R_L = 32Ω, f = 1kHz, Both channels in phase and active V_{DD} = 1.5V V_{DD} = 1.8V	 13 22	 12 20	 mW (min) mW (min)
		THD+N = 1% R_L = 16Ω, f = 1kHz, Both channels in phase and active V_{DD} = 1.5V V_{DD} = 1.8V	 12 24		 mW mW
$V_{LINE-OUT}$	Output Voltage to Line Out	R_L = 10kΩ, f = 1kHz			
		V_{DD} = 1.5V, THD+N = 1%, R_L = 10kΩ	1.1	1	V_{RMS} (min)
		V_{DD} = 1.8V, THD+N = 1%, R_L = 10kΩ	1.3	1.2	V_{RMS} (min)
THD+N	Total Harmonic Distortion + Noise	P_O = 8mW, f = 1kHz, R_L = 32Ω	0.04		%
		P_O = 8mW, f = 1kHz, R_L = 16Ω	0.07		%
		V_{OLIF} = 900mV_{RMS}, f = 1kHz, R_L = 10kΩ	0.001		%
PSRR	Power Supply Rejection Ratio	V_{RIPPLE} = 200mV_{P-P} Sine, Inputs AC GND, C1 = C2 = 0.39µF			
		f_{RIPPLE} = 217Hz f_{RIPPLE} = 1kHz f_{RIPPLE} = 15kHz	83 77 57		dB dB dB
SNR	Signal-to-Noise Ratio	R_L = 32Ω, P_{OUT} = 8mW (A-weighted), f = 1kHz BW = 20Hz to 22kHz	102		dB
X_{TALK}	Crosstalk	R_L = 32Ω, P_{OUT} = 5mW, f = 1kHz	93		dB
N_{OUT}	Output Noise	A-weighted, A_V = 5.1dB R1 = R2 = 10kΩ, R3 = R4 = 18kΩ	5		µV
C-P	Click-Pop	Inputs Grounded BW = <10Hz to >500kHz	79		dB

(1) *"Absolute Maximum Ratings"* indicate limits beyond which damage to the device may occur, including inoperability and degradation of device reliability and/or performance. Functional operation of the device and/or non-degradation at the *Absolute Maximum Ratings*Ratings or other conditions beyond those indicated in the *Recommended Operating Conditions* is not implied. The *Recommended Operating Conditions* indicate conditions at which the device is functional and the device should not be operated beyond such conditions. All voltages are measured with respect to the ground pin, unless otherwise specified

(2) The *Electrical Characteristics* tables list ensured specifications under the listed *Recommended Operating Conditions* except as otherwise modified or specified by the *Electrical Characteristics Conditions* and/or Notes. Typical specifications are estimations only and are not ensured.

(3) Typical values represent most likely parametric norms at T_A = +25ºC, and at the *Recommended Operation Conditions* at the time of product characterization and are not ensured.

(4) Datasheet min/max specification limits are ensured by test or statistical analysis.

Copyright © 2008–2013, Texas Instruments Incorporated

Typical Performance Characteristics

THD+N vs Frequency
V_{DD} = 1.5V, R_L = 16Ω, P_O = 8mW

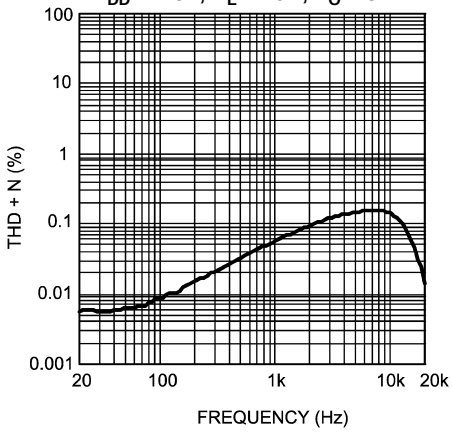

Figure 3.

THD+N vs Frequency
V_{DD} = 1.5V, R_L = 32Ω, P_O = 8mW

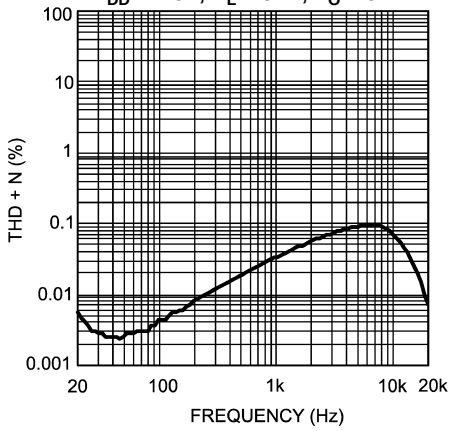

Figure 4.

THD+N vs Frequency
V_{DD} = 1.8V, R_L = 16Ω, P_O = 18mW

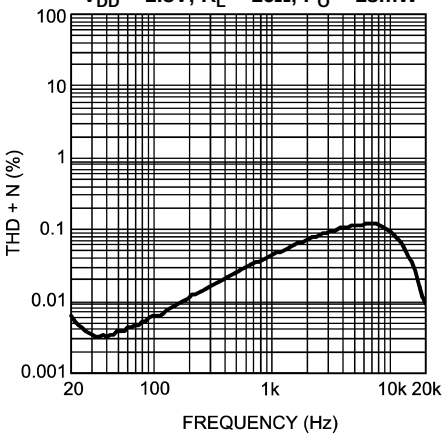

Figure 5.

THD+N vs Frequency
V_{DD} = 1.8V, R_L = 32Ω, P_O = 20mW

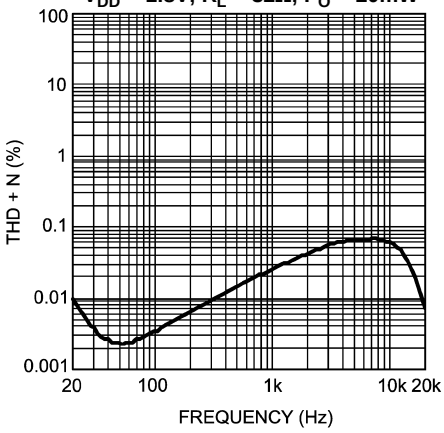

Figure 6.

THD+N vs Output Power
V_{DD} = 1.5V & 1.8V, R_L = 16Ω, f = 1kHz

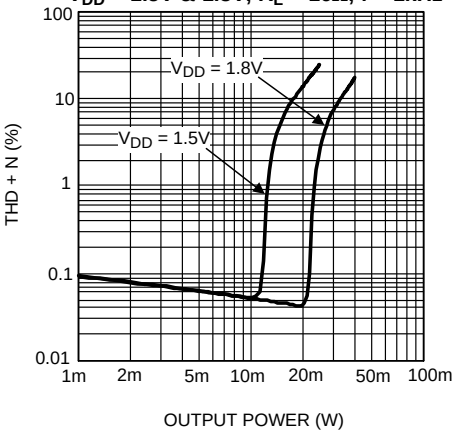

Figure 7.

THD+N vs Output Power
V_{DD} = 1.5V & 1.8V, R_L = 32Ω, f = 1kHz

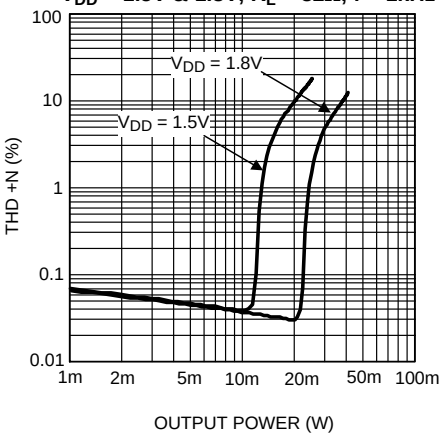

Figure 8.

Copyright © 2008–2013, Texas Instruments Incorporated

Typical Performance Characteristics (continued)

Power Dissipation vs Output Power
R_L = 16Ω, f = 1kHz

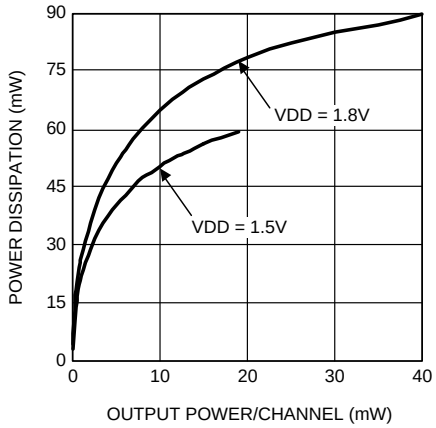

Figure 9.

Power Dissipation vs Output Power
R_L = 32Ω, f = 1kHz

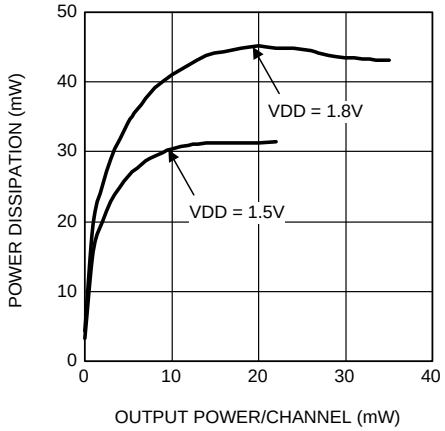

Figure 10.

PSRR vs Frequency
V_{DD} = 1.5V, V_{RIPPLE} = 200mV_{P-P}, R_L = 32Ω

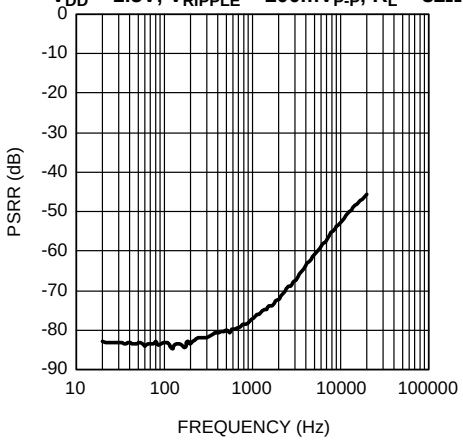

Figure 11.

Output Power vs Supply Voltage
R_L = 16Ω, f = 1kHz

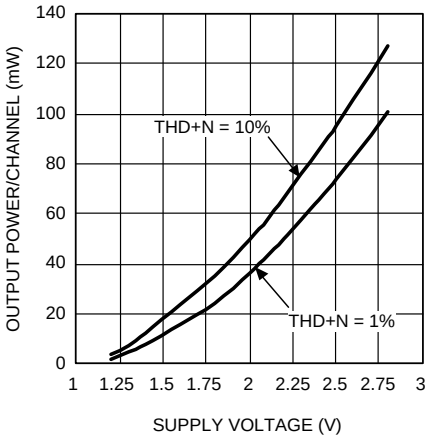

Figure 12.

Output Power vs Supply Voltage
R_L = 32Ω, f = 1kHz

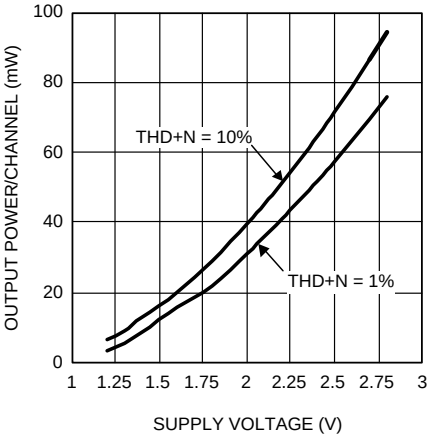

Figure 13.

Supply Current vs Supply Voltage
No Load

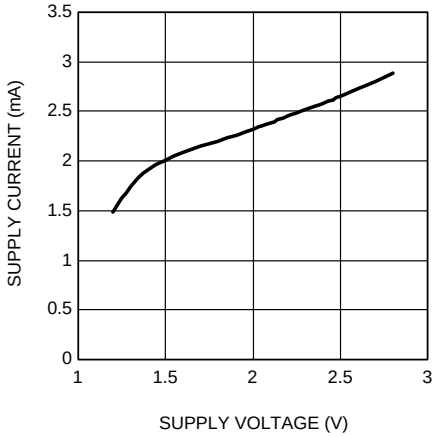

Figure 14.

Typical Performance Characteristics (continued)

Shutdown Current vs Supply Voltage
No Load

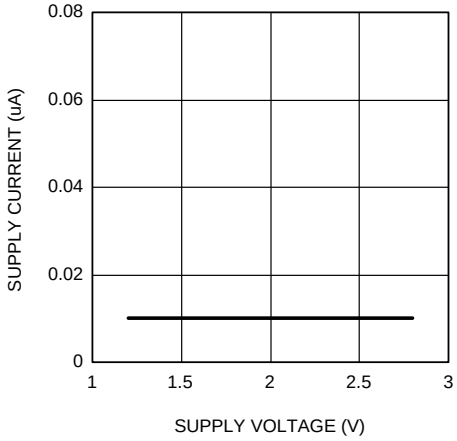

Figure 15.

Crosstalk vs Frequency
V_{DD} = 1.5V, P_{OUT} = 5mW, R_L = 32Ω

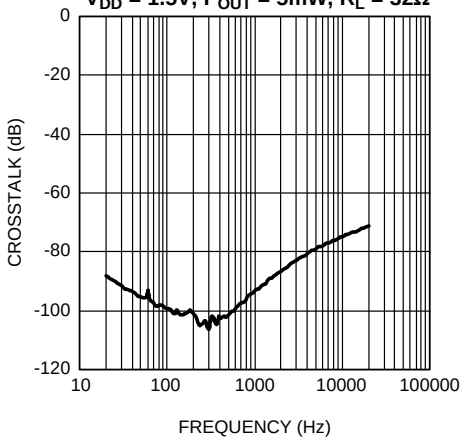

Figure 16.

Copyright © 2008–2013, Texas Instruments Incorporated

APPLICATION INFORMATION

GENERAL AMPLIFIER FUNCTION

The LM48861 headphone amplifier features TI's ground referenced architecture that eliminates the large DC-blocking capacitors required at the outputs of traditional headphone amplifiers. A low-noise inverting charge pump creates a negative supply (CPV_{SS}) from the positive supply voltage (V_{DD}). The headphone amplifiers operate from these bipolar supplies, with the amplifier outputs biased about GND, instead of a nominal DC voltage (typically $V_{DD}/2$), like traditional amplifiers. Because there is no DC component to the headphone output signals, the large DC-blocking capacitors (typically 220µF) are not necessary, conserving board space and system cost, while improving frequency response.

COMMON MODE SENSE

The LM48861 features a ground (common mode) sensing feature. In noisy applications, or where the headphone jack is used as a line out to other devices, noise pick up and ground imbalance can degrade audio quality. The LM48861 COM input senses and corrects any noise at the headphone return, or any ground imbalance between the headphone return and device ground, improving audio reproduction. Connect COM directly to the headphone return terminal of the headphone jack Figure 17. No additional external components are required. Connect COM to GND if the common-mode sense feature is not in use.

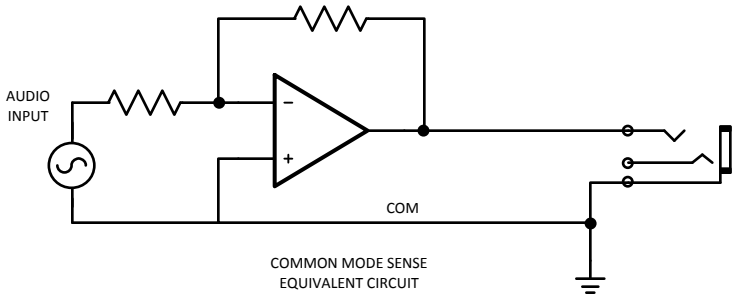

Figure 17.

MICRO POWER SHUTDOWN

The voltage applied to the shutdown ($\overline{SHDN}$) pin controls the LM48861's shutdown function. Activate micro-power shutdown by applying a logic-low voltage to the $\overline{SHDN}$ pin. When active, the LM48861's micro-power shutdown feature turns off the amplifier's bias circuitry, reducing the supply current. The trigger point is 0.4V (max) for a logic-low level, and 1.4V (min) for a logic-high level. The low 0.1µA (typ) shutdown current is achieved by applying a voltage that is as near as ground as possible to the $\overline{SHDN}$ pin. A voltage that is higher than ground may increase the shutdown current.

There are a few ways to control the micro-power shutdown. These include using a single-pole, single-throw switch, a microprocessor, or a microcontroller. When using a switch, connect an external 100kΩ pull-up resistor between the $\overline{SHDN}$ pin and GND. Connect the switch between the $\overline{SHDN}$ pin and V_{DD}. Select normal amplifier operation by closing the switch. Opening the switch connects the $\overline{SHDN}$ pin to ground, activating micro-power shutdown. The switch and resistor ensure that the $\overline{SHDN}$ pin will not float. This prevents unwanted state changes. In a system with a microprocessor or microcontroller, use a digital output to apply the control voltage to the $\overline{SHDN}$ pin. Driving the $\overline{SHDN}$ pin with active circuitry eliminates the pull-up resistor.

POWER DISSIPATION

Power dissipation is a major concern when using any power amplifier, especially one in mobile devices. In the LM48861, the power dissipation comes from the charge pump and two operational amplifiers. Refer to the Figure 10 Power Dissipation vs Output Power curve in the Typical Performance Characteristics section of the datasheet to find the power dissipation associated the output power level of the LM48861. The power dissipation should not exceed the maximum power dissipation point of the DSBGA package given in Equation 1.

$$P_{DMAX} = (T_{JMAX} - T_A) / (\theta_{JA}) \quad (1)$$

For the LM48861TM DSBGA package, θ_{JA} = 70°C/W. T_{JMAX} = 150°C, and T_A is the ambient temperature of the system surroundings.

PROPER SELECTION OF EXTERNAL COMPONENTS

Power Supply Bypassing/Filtering

Proper power supply bypassing is critical for low noise performance and high PSRR. Place the supply bypass capacitors as close to the supply pins as possible. Place a 1µF ceramic capacitor from V_{DD} to GND. Additional bulk capacitance may be added as required.

Charge Pump Capacitor Selection

Use low ESR ceramic capacitors (less than 100mΩ) for optimum performance.

Charge Pump Flying Capacitor (C5)

The flying capacitor (C5) affects the load regulation and output impedance of the charge pump. A C5 value that is too low results in a loss of current drive, leading to a loss of amplifier headroom. A higher valued C5 improves load regulation and lowers charge pump output impedance to an extent. Above 2.2µF, the $R_{DS(ON)}$ of the charge pump switches and the ESR of C5 and C6 dominate the output impedance. A lower value capacitor can be used in systems with low maximum output power requirements.

Charge Pump Hold Capacitor (C6)

The value and ESR of the hold capacitor (C6) directly affects the ripple on CPV_{SS}. Increasing the value of C6 reduces output ripple. Decreasing the ESR of C6 reduces both output ripple and charge pump output impedance. A lower value capacitor can be used in systems with low maximum output power requirements.

Power Supply Bypassing /Filtering

Proper power supply bypassing is critical for low noise performance and high PSRR. Place the supply bypass capacitors as close to the device as possible. Typical applications employ a voltage regulator with 10µF and 0.1µF bypass capacitors that increase supply stability. These capacitors do not eliminate the need for bypassing of the LM48861 supply pins. A 1µF capacitor is recommended.

Input Capacitor Selection

The LM48861 requires input coupling capacitors. Input capacitors block the DC component of the audio signal, eliminating any conflict between the DC component of the audio source and the bias voltage of the LM48861. The input capacitors create a high-pass filter with the input resistors R_{IN}. The -3dB point of the high-pass filter is found using Equation 2 below.

$$f = 1 / 2\pi R_{IN} C_{IN} \quad (2)$$

Where

- the value of R_{IN} is selected based on the gain-setting resistor selection.

In relation to Figure 1, R_{IN} = R1 = R2, C_{IN} = C1 = C2.

The input capacitors can also be used to remove low frequency content from the audio signal. Small speakers can not reproduce, and may even be damaged by low frequencies. High-pass filtering the audio signal helps protect the speakers. When the LM48861 is using a single-ended source, power supply noise on the ground is seen as an input signal. Setting the high-pass filter point above the power supply noise frequencies, 217Hz in a GSM phone, for example, filters out the noise such that it is not amplified and heard on the output. Capacitors with a tolerance of 10% or better are recommended for impedance matching and improved CMRR and PSRR.

Copyright © 2008–2013, Texas Instruments Incorporated

PCB Layout Guidelines

Minimize trace impedance of the power, ground and all output traces for optimum performance. Voltage loss due to trace resistance between the LM48861 and the load results in decreased output power and efficiency. Trace resistance between the power supply and ground has the same effect as a poorly regulated supply, increased ripple and reduced peak output power. Use wide traces for power supply inputs and amplifier outputs to minimize losses due to trace resistance, as well as route heat away from the device. Proper grounding improves audio performance, minimizes crosstalk between channels and prevents switching noise from interfering with the audio signal. Use of power and ground planes is recommended.

As described in the Common Mode Sense section, the LM48861 features a ground sensing feature. On the PCB layout, connect the COM pin (pin D2) directly to the headphone jack ground and also to the left and right input grounds. This will help correct any noise or any ground imbalance between the headphone return, input, and the device ground, therefore improving audio reproduction.

The charge pump capacitors and traces connecting the capacitor to the device should be kept away from the input and output traces to avoid any switching noise injected into the input or output.

Demo Board Schematic and Layout

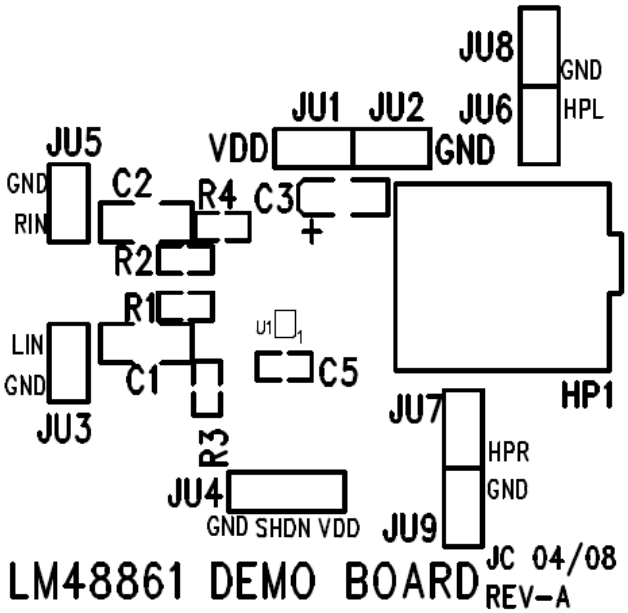

Figure 18. Top Silkscreen Layer

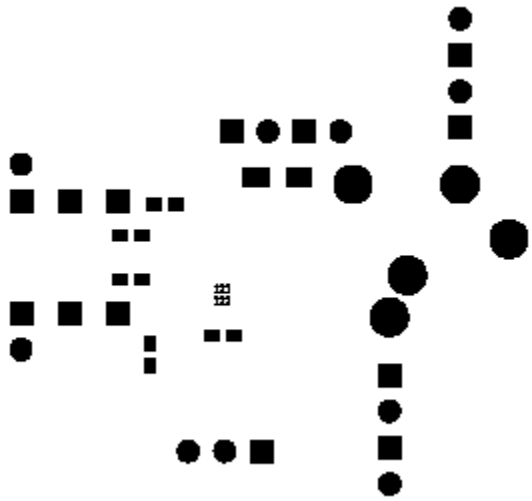

Figure 19. Top Solder Mask

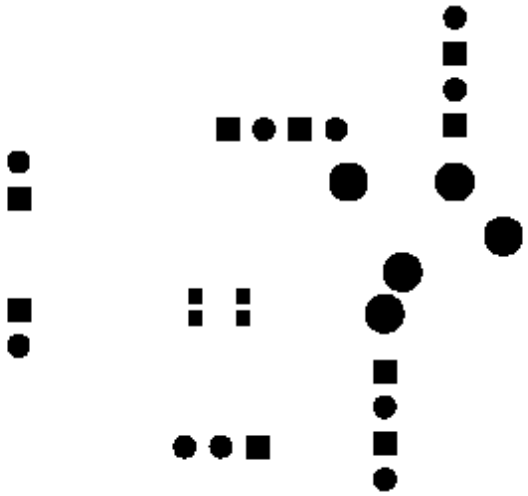

Figure 20. Bottom Solder Mask

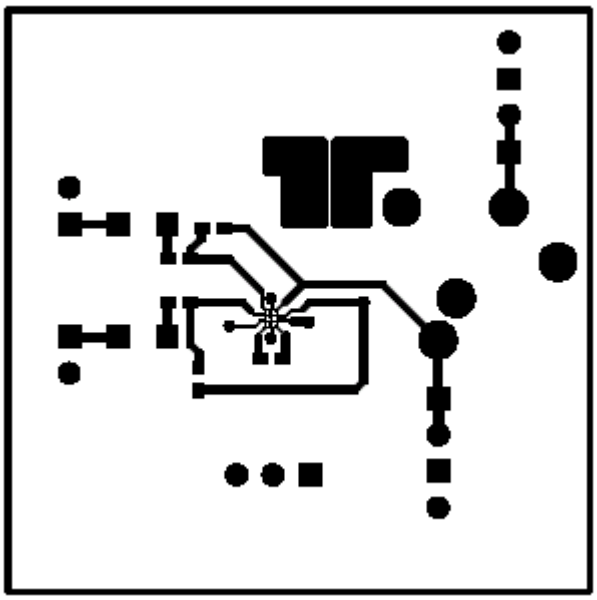

Figure 21. Top Layer

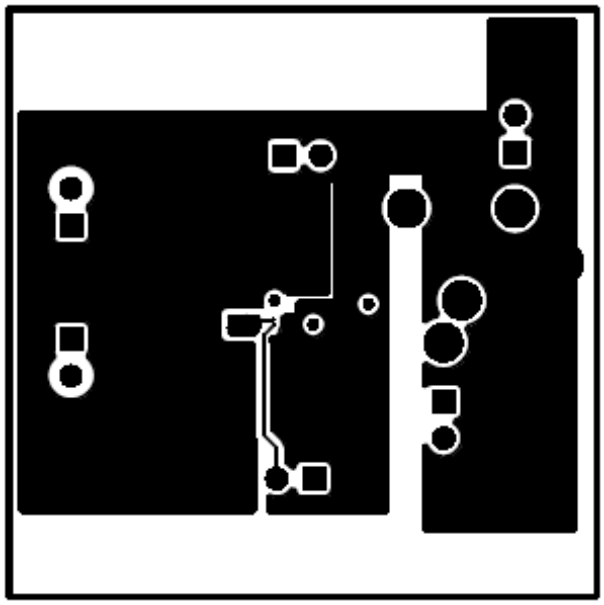

Figure 22. Layer 2

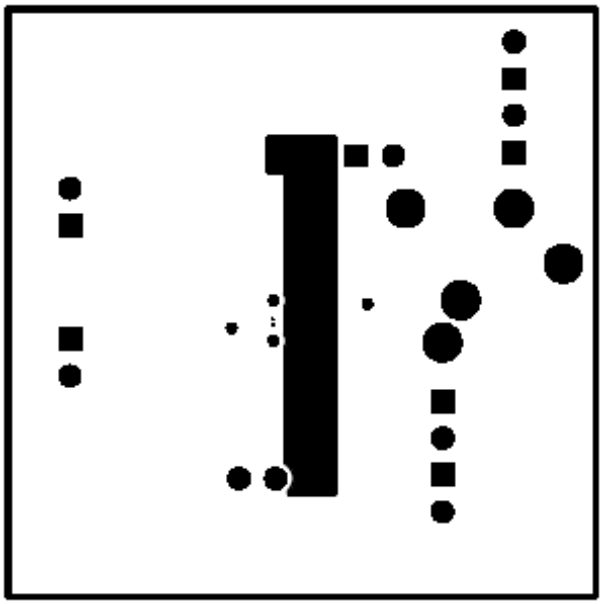

Figure 23. Layer 3

Copyright © 2008–2013, Texas Instruments Incorporated

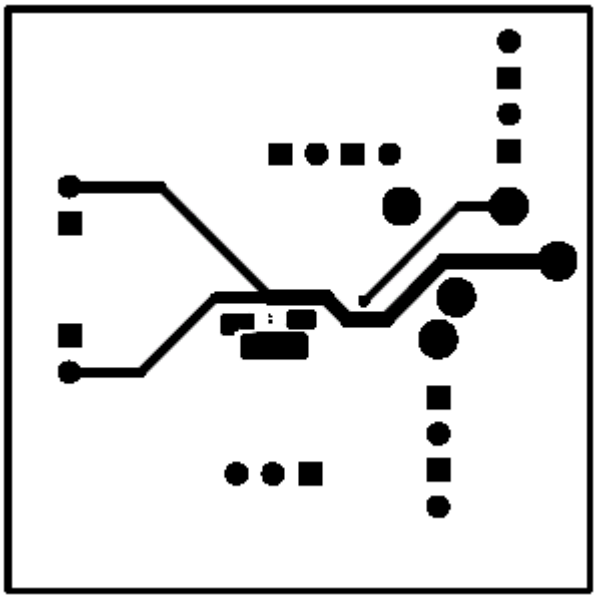

Figure 24. Bottom Layer

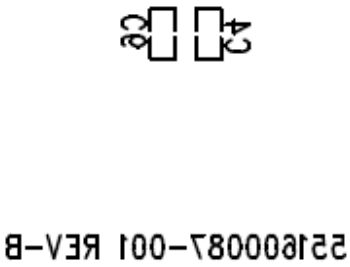

Figure 25. Bottom Silkscreen

REVISION HISTORY

Rev	Date	Description
1.0	06/11/08	Initial release.
1.01	02/08/10	Input text edits.
B	05/02/2013	Changed layout of National Data Sheet to TI format.

Copyright © 2008–2013, Texas Instruments Incorporated

PACKAGING INFORMATION

Orderable Device	Status (1)	Package Type	Package Drawing	Pins	Package Qty	Eco Plan (2)	Lead/Ball Finish	MSL Peak Temp (3)	Op Temp (°C)	Top-Side Markings (4)	Samples
LM48861TM/NOPB	ACTIVE	DSBGA	YFQ	12	250	Green (RoHS & no Sb/Br)	SNAGCU	Level-1-260C-UNLIM	-40 to 85	G K3	Samples
LM48861TMX/NOPB	ACTIVE	DSBGA	YFQ	12	3000	Green (RoHS & no Sb/Br)	SNAGCU	Level-1-260C-UNLIM	-40 to 85	G K3	Samples

(1) The marketing status values are defined as follows:
ACTIVE: Product device recommended for new designs.
LIFEBUY: TI has announced that the device will be discontinued, and a lifetime-buy period is in effect.
NRND: Not recommended for new designs. Device is in production to support existing customers, but TI does not recommend using this part in a new design.
PREVIEW: Device has been announced but is not in production. Samples may or may not be available.
OBSOLETE: TI has discontinued the production of the device.

(2) Eco Plan - The planned eco-friendly classification: Pb-Free (RoHS), Pb-Free (RoHS Exempt), or Green (RoHS & no Sb/Br) - please check http://www.ti.com/productcontent for the latest availability information and additional product content details.
TBD: The Pb-Free/Green conversion plan has not been defined.
Pb-Free (RoHS): TI's terms "Lead-Free" or "Pb-Free" mean semiconductor products that are compatible with the current RoHS requirements for all 6 substances, including the requirement that lead not exceed 0.1% by weight in homogeneous materials. Where designed to be soldered at high temperatures, TI Pb-Free products are suitable for use in specified lead-free processes.
Pb-Free (RoHS Exempt): This component has a RoHS exemption for either 1) lead-based flip-chip solder bumps used between the die and package, or 2) lead-based die adhesive used between the die and leadframe. The component is otherwise considered Pb-Free (RoHS compatible) as defined above.
Green (RoHS & no Sb/Br): TI defines "Green" to mean Pb-Free (RoHS compatible), and free of Bromine (Br) and Antimony (Sb) based flame retardants (Br or Sb do not exceed 0.1% by weight in homogeneous material)

(3) MSL, Peak Temp. -- The Moisture Sensitivity Level rating according to the JEDEC industry standard classifications, and peak solder temperature.

(4) Multiple Top-Side Markings will be inside parentheses. Only one Top-Side Marking contained in parentheses and separated by a "~" will appear on a device. If a line is indented then it is a continuation of the previous line and the two combined represent the entire Top-Side Marking for that device.

Important Information and Disclaimer: The information provided on this page represents TI's knowledge and belief as of the date that it is provided. TI bases its knowledge and belief on information provided by third parties, and makes no representation or warranty as to the accuracy of such information. Efforts are underway to better integrate information from third parties. TI has taken and continues to take reasonable steps to provide representative and accurate information but may not have conducted destructive testing or chemical analysis on incoming materials and chemicals. TI and TI suppliers consider certain information to be proprietary, and thus CAS numbers and other limited information may not be available for release.

In no event shall TI's liability arising out of such information exceed the total purchase price of the TI part(s) at issue in this document sold by TI to Customer on an annual basis.

TAPE AND REEL INFORMATION

REEL DIMENSIONS

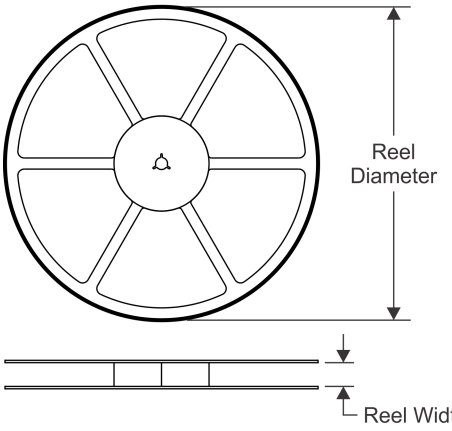

TAPE DIMENSIONS

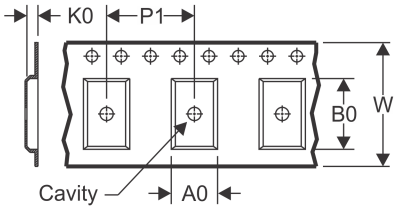

A0	Dimension designed to accommodate the component width
B0	Dimension designed to accommodate the component length
K0	Dimension designed to accommodate the component thickness
W	Overall width of the carrier tape
P1	Pitch between successive cavity centers

QUADRANT ASSIGNMENTS FOR PIN 1 ORIENTATION IN TAPE

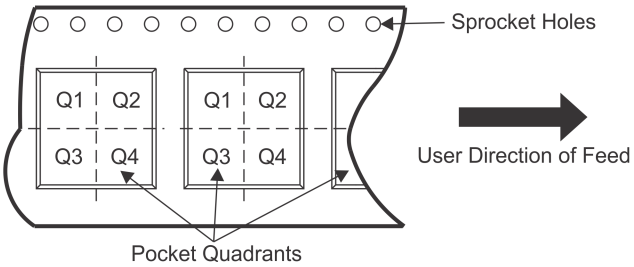

*All dimensions are nominal

Device	Package Type	Package Drawing	Pins	SPQ	Reel Diameter (mm)	Reel Width W1 (mm)	A0 (mm)	B0 (mm)	K0 (mm)	P1 (mm)	W (mm)	Pin1 Quadrant
LM48861TM/NOPB	DSBGA	YFQ	12	250	178.0	8.4	1.35	1.75	0.76	4.0	8.0	Q1
LM48861TMX/NOPB	DSBGA	YFQ	12	3000	178.0	8.4	1.35	1.75	0.76	4.0	8.0	Q1

TAPE AND REEL BOX DIMENSIONS

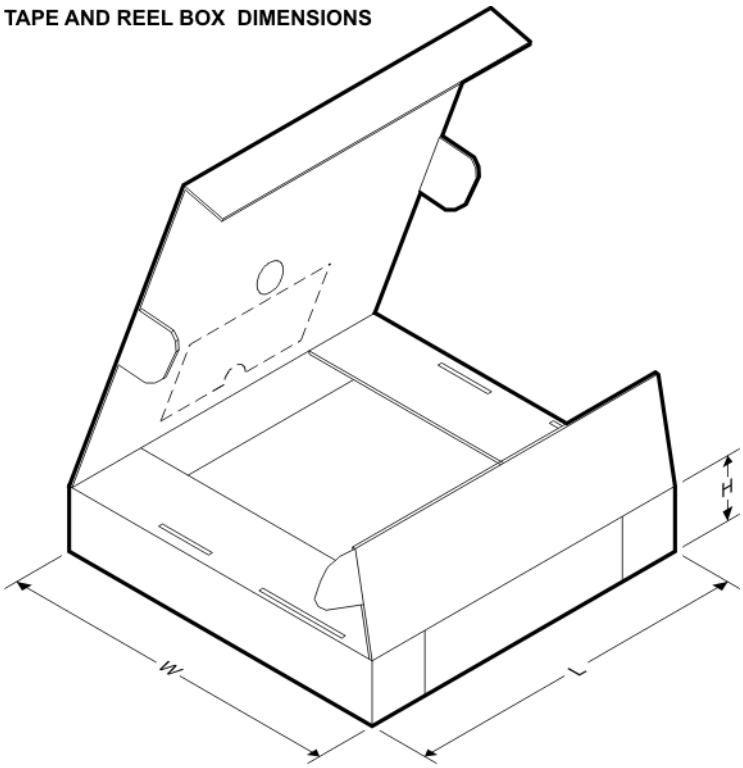

*All dimensions are nominal

Device	Package Type	Package Drawing	Pins	SPQ	Length (mm)	Width (mm)	Height (mm)
LM48861TM/NOPB	DSBGA	YFQ	12	250	210.0	185.0	35.0
LM48861TMX/NOPB	DSBGA	YFQ	12	3000	210.0	185.0	35.0

YFQ0012

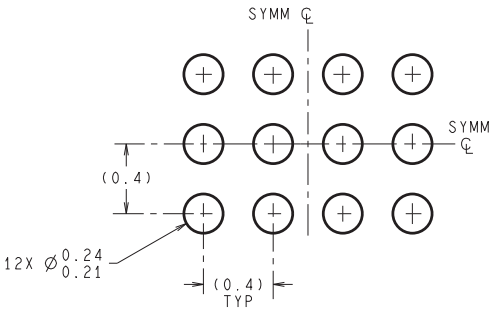

DIMENSIONS ARE IN MILLIMETERS
DIMENSIONS IN ( ) FOR REFERENCE ONLY

LAND PATTERN RECOMMENDATION

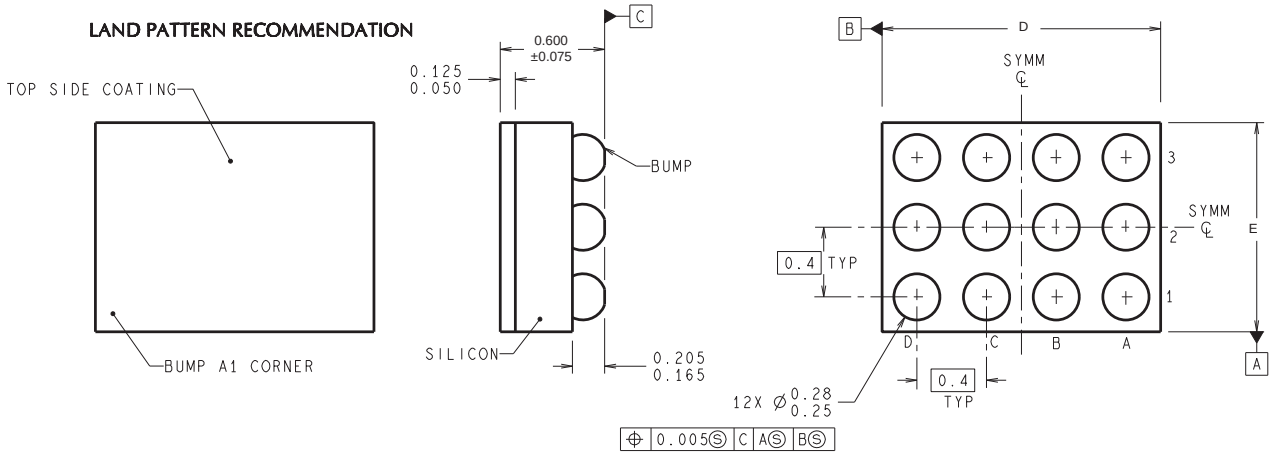

TMD12XXX (Rev B)

D: Max = 1.64 mm, Min = 1.58 mm

E: Max = 1.24 mm, Min = 1.18 mm

4215079/A 12/12

NOTES: A. All linear dimensions are in millimeters. Dimensioning and tolerancing per ASME Y14.5M-1994.
B. This drawing is subject to change without notice.

IMPORTANT NOTICE

Texas Instruments Incorporated and its subsidiaries (TI) reserve the right to make corrections, enhancements, improvements and other changes to its semiconductor products and services per JESD46, latest issue, and to discontinue any product or service per JESD48, latest issue. Buyers should obtain the latest relevant information before placing orders and should verify that such information is current and complete. All semiconductor products (also referred to herein as “components”) are sold subject to TI’s terms and conditions of sale supplied at the time of order acknowledgment.

TI warrants performance of its components to the specifications applicable at the time of sale, in accordance with the warranty in TI’s terms and conditions of sale of semiconductor products. Testing and other quality control techniques are used to the extent TI deems necessary to support this warranty. Except where mandated by applicable law, testing of all parameters of each component is not necessarily performed.

TI assumes no liability for applications assistance or the design of Buyers’ products. Buyers are responsible for their products and applications using TI components. To minimize the risks associated with Buyers’ products and applications, Buyers should provide adequate design and operating safeguards.

TI does not warrant or represent that any license, either express or implied, is granted under any patent right, copyright, mask work right, or other intellectual property right relating to any combination, machine, or process in which TI components or services are used. Information published by TI regarding third-party products or services does not constitute a license to use such products or services or a warranty or endorsement thereof. Use of such information may require a license from a third party under the patents or other intellectual property of the third party, or a license from TI under the patents or other intellectual property of TI.

Reproduction of significant portions of TI information in TI data books or data sheets is permissible only if reproduction is without alteration and is accompanied by all associated warranties, conditions, limitations, and notices. TI is not responsible or liable for such altered documentation. Information of third parties may be subject to additional restrictions.

Resale of TI components or services with statements different from or beyond the parameters stated by TI for that component or service voids all express and any implied warranties for the associated TI component or service and is an unfair and deceptive business practice. TI is not responsible or liable for any such statements.

Buyer acknowledges and agrees that it is solely responsible for compliance with all legal, regulatory and safety-related requirements concerning its products, and any use of TI components in its applications, notwithstanding any applications-related information or support that may be provided by TI. Buyer represents and agrees that it has all the necessary expertise to create and implement safeguards which anticipate dangerous consequences of failures, monitor failures and their consequences, lessen the likelihood of failures that might cause harm and take appropriate remedial actions. Buyer will fully indemnify TI and its representatives against any damages arising out of the use of any TI components in safety-critical applications.

In some cases, TI components may be promoted specifically to facilitate safety-related applications. With such components, TI’s goal is to help enable customers to design and create their own end-product solutions that meet applicable functional safety standards and requirements. Nonetheless, such components are subject to these terms.

No TI components are authorized for use in FDA Class III (or similar life-critical medical equipment) unless authorized officers of the parties have executed a special agreement specifically governing such use.

Only those TI components which TI has specifically designated as military grade or “enhanced plastic” are designed and intended for use in military/aerospace applications or environments. Buyer acknowledges and agrees that any military or aerospace use of TI components which have ***not*** been so designated is solely at the Buyer's risk, and that Buyer is solely responsible for compliance with all legal and regulatory requirements in connection with such use.

TI has specifically designated certain components as meeting ISO/TS16949 requirements, mainly for automotive use. In any case of use of non-designated products, TI will not be responsible for any failure to meet ISO/TS16949.

Products		**Applications**	
Audio	www.ti.com/audio	Automotive and Transportation	www.ti.com/automotive
Amplifiers	amplifier.ti.com	Communications and Telecom	www.ti.com/communications
Data Converters	dataconverter.ti.com	Computers and Peripherals	www.ti.com/computers
DLP® Products	www.dlp.com	Consumer Electronics	www.ti.com/consumer-apps
DSP	dsp.ti.com	Energy and Lighting	www.ti.com/energy
Clocks and Timers	www.ti.com/clocks	Industrial	www.ti.com/industrial
Interface	interface.ti.com	Medical	www.ti.com/medical
Logic	logic.ti.com	Security	www.ti.com/security
Power Mgmt	power.ti.com	Space, Avionics and Defense	www.ti.com/space-avionics-defense
Microcontrollers	microcontroller.ti.com	Video and Imaging	www.ti.com/video
RFID	www.ti-rfid.com		
OMAP Applications Processors	www.ti.com/omap	**TI E2E Community**	e2e.ti.com
Wireless Connectivity	www.ti.com/wirelessconnectivity		

Mailing Address: Texas Instruments, Post Office Box 655303, Dallas, Texas 75265
Copyright © 2013, Texas Instruments Incorporated