LM1876 *Overture*™ Audio Power Amplifier Series
Dual 20W Audio Power Amplifier with Mute and Standby Modes

Check for Samples: LM1876

FEATURES

- **SPiKe Protection**
- **Minimal Amount of External Components Necessary**
- **Quiet Fade-In/Out Mute Mode**
- **Standby-Mode**
- **Isolated 15-Lead TO-220 Package (PFM)**
- **Non-Isolated 15-lead TO-220 Package**
- **Wide Supply Range 20V - 64V**

APPLICATIONS

- **High-End Stereo TVs**
- **Component Stereo**
- **Compact Stereo**

KEY SPECIFICATIONS

- **THD+N at 1kHz at 2 x 15W continuous averageoutput power into 4Ω or 8Ω: 0.1% (max)**
- **THD+N at 1kHz at continuous average output power of 2 x 20W into 8Ω: 0.009% (typ)**
- **Standby current: 4.2mA (typ)**

DESCRIPTION

The LM1876 is a stereo audio amplifier capable of delivering typically 20W per channel of continuous average output power into a 4Ω or 8Ω load with less than 0.1% THD+N.

Each amplifier has an independent smooth transition fade-in/out mute and a power conserving standby mode which can be controlled by external logic.

The performance of the LM1876, utilizing its Self Peak Instantaneous Temperature (°Ke) (SPiKe™) protection circuitry, places it in a class above discrete and hybrid amplifiers by providing an inherently, dynamically protected Safe Operating Area (SOA). SPiKe protection means that these parts are safeguarded at the output against overvoltage, undervoltage, overloads, including thermal runaway and instantaneous temperature peaks.

Connection Diagram

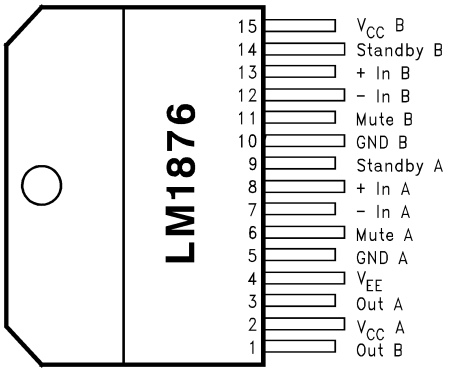

Figure 1. Plastic Package- Top View
Isolated Package (PFM)
See Package Number NDB0015B
Non-Isolated Package
See Package Number NDL0015A

Please be aware that an important notice concerning availability, standard warranty, and use in critical applications of Texas Instruments semiconductor products and disclaimers thereto appears at the end of this data sheet.

Overture, SPiKe are trademarks of dcl_owner.
All other trademarks are the property of their respective owners.

PRODUCTION DATA information is current as of publication date. Products conform to specifications per the terms of the Texas Instruments standard warranty. Production processing does not necessarily include testing of all parameters.

Copyright © 1999–2013, Texas Instruments Incorporated

Typical Application

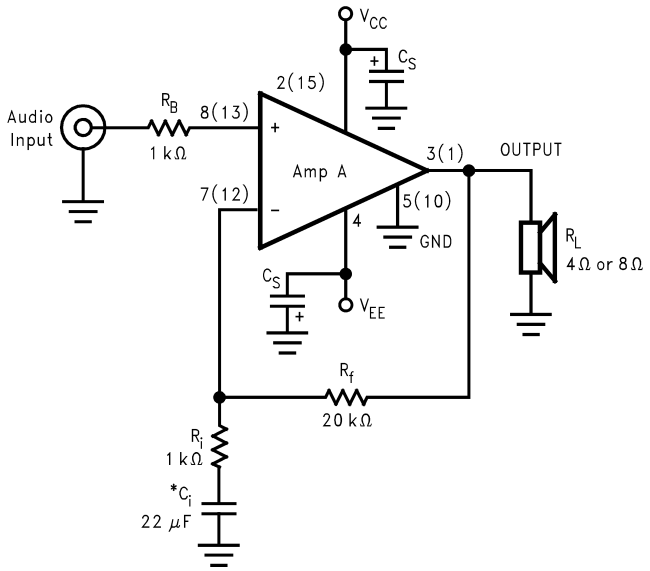

Numbers in parentheses represent pinout for amplifier B.

*Optional component dependent upon specific design requirements.

Figure 2. Typical Audio Amplifier Application Circuit

Copyright © 1999–2013, Texas Instruments Incorporated

These devices have limited built-in ESD protection. The leads should be shorted together or the device placed in conductive foam during storage or handling to prevent electrostatic damage to the MOS gates.

Absolute Maximum Ratings (1)(2)(3)

Supply Voltage $\|V_{CC}\| + \|V_{EE}\|$ (No Input)			64V
Supply Voltage $\|V_{CC}\| + \|V_{EE}\|$ (with Input)			64V
Common Mode Input Voltage			(V_{CC} or V_{EE}) and $\|V_{CC}\| + \|V_{EE}\| \le 54V$
Differential Input Voltage			54V
Output Current			Internally Limited
Power Dissipation (4)			62.5W
ESD Susceptability (5)			2000V
Junction Temperature (6)			150°C
Thermal Resistance	Isolated NDB-Package	θ_{JC}	2°C/W
	Non-Isolated NDL-Package	θ_{JC}	1°C/W
Soldering Information	NDB Package (10 sec.)		260°C
Storage Temperature			−40°C to +150°C

(1) Absolute Maximum Ratings indicate limits beyond which damage to the device may occur. Operating Ratings indicate conditions for which the device is functional, but do not ensure specific performance limits. Electrical Characteristics state DC and AC electrical specifications under particular test conditions which specify performance limits. This assumes that the device is within the Operating Ratings. Specifications are not ensure for parameters where no limit is given, however, the typical value is a good indication of device performance.
(2) All voltages are measured with respect to the GND pins (5, 10), unless otherwise specified.
(3) If Military/Aerospace specified devices are required, please contact the Texas Instruments Sales Office/ Distributors for availability and specifications.
(4) For operating at case temperatures above 25°C, the device must be derated based on a 150°C maximum junction temperature and a thermal resistance of θ_{JC} = 2°C/W (junction to case) for the NDB package and θ_{JC} = 1°C/W for the NDL package. Refer to DETERMINING THE CORRECT HEAT SINK in Application Information.
(5) Human body model, 100 pF discharged through a 1.5 kΩ resistor.
(6) The operating junction temperature maximum is 150°C, however, the instantaneous Safe Operating Area temperature is 250°C.

Operating Ratings (1)(2)

Temperature Range	$T_{MIN} \le T_A \le T_{MAX}$	−20°C ≤ T_A ≤ +85°C
Supply Voltage $\|V_{CC}\| + \|V_{EE}\|$ (3)		20V to 64V

(1) All voltages are measured with respect to the GND pins (5, 10), unless otherwise specified.
(2) Absolute Maximum Ratings indicate limits beyond which damage to the device may occur. Operating Ratings indicate conditions for which the device is functional, but do not ensure specific performance limits. Electrical Characteristics state DC and AC electrical specifications under particular test conditions which specify performance limits. This assumes that the device is within the Operating Ratings. Specifications are not ensure for parameters where no limit is given, however, the typical value is a good indication of device performance.
(3) Operation is specified up to 64V, however, distortion may be introduced from SPiKe Protection Circuitry if proper thermal considerations are not taken into account. Refer to Application Information for a complete explanation.

Copyright © 1999–2013, Texas Instruments Incorporated

Electrical Characteristics [1][2]

The following specifications apply for V_{CC} = +22V, V_{EE} = −22V with R_L = 8Ω unless otherwise specified. Limits apply for T_A = 25°C.

Symbol	Parameter	Conditions	LM1876		Units (Limits)
			Typical [3]	Limit [4]	
$\|V_{CC}\|$ + $\|V_{EE}\|$	Power Supply Voltage [5]	GND − V_{EE} ≥ 9V		20 64	V (min) V (max)
P_O [6]	Output Power (Continuous Average)	THD + N = 0.1% (max), f = 1 kHz $\|V_{CC}\|$ = $\|V_{EE}\|$ = 22V, R_L = 8Ω $\|V_{CC}\|$ = $\|V_{EE}\|$ = 20V, R_L = 4Ω [7]	 20 22	 15 15	 W/ch (min) W/ch (min)
THD + N	Total Harmonic Distortion Plus Noise	15 W/ch, R_L = 8Ω 15 W/ch, R_L = 4Ω, $\|V_{CC}\|$ = $\|V_{EE}\|$ = 20V 20 Hz ≤ f ≤ 20 kHz, A_V = 26 dB	0.08 0.1		% %
X_{talk}	Channel Separation	f = 1 kHz, V_O = 10.9 Vrms	80		dB
SR [6]	Slew Rate	V_{IN} = 1.414 Vrms, t_{rise} = 2 ns	18	12	V/µs (min)
I_{total} [8]	Total Quiescent Power Supply Current	Both Amplifiers V_{CM} = 0V, V_O = 0V, I_O = 0 mA Standby: Off Standby: On	 50 4.2	 80 6	 mA (max) mA (max)
V_{OS} [8]	Input Offset Voltage	V_{CM} = 0V, I_O = 0 mA	2.0	15	mV (max)
I_B	Input Bias Current	V_{CM} = 0V, I_O = 0 mA	0.2	0.5	µA (max)
I_{OS}	Input Offset Current	V_{CM} = 0V, I_O = 0 mA	0.002	0.2	µA (max)
I_O	Output Current Limit	$\|V_{CC}\|$ = $\|V_{EE}\|$ = 10V, t_{ON} = 10 ms, V_O = 0V	3.5	2.9	Apk (min)
V_{OD} [8]	Output Dropout Voltage [9]	$\|V_{CC}–V_O\|$, V_{CC} = 20V, I_O = +100 mA $\|V_O–V_{EE}\|$, V_{EE} = −20V, I_O = −100 mA	1.8 2.5	2.3 3.2	V (max) V (max)
PSRR [8]	Power Supply Rejection Ratio	V_{CC} = 25V to 10V, V_{EE} = −25V, V_{CM} = 0V, I_O = 0 mA V_{CC} = 25V, V_{EE} = −25V to −10V V_{CM} = 0V, I_O = 0 mA	115 110	85 85	dB (min) dB (min)
CMRR [8]	Common Mode Rejection Ratio	V_{CC} = 35V to 10V, V_{EE} = −10V to −35V, V_{CM} = 10V to −10V, I_O = 0 mA	110	80	dB (min)
A_{VOL} [8]	Open Loop Voltage Gain	R_L = 2 kΩ, Δ V_O = 20 V	110	90	dB (min)
GBWP	Gain Bandwidth Product	f_O = 100 kHz, V_{IN} = 50 mVrms	7.5	5	MHz (min)

(1) All voltages are measured with respect to the GND pins (5, 10), unless otherwise specified.
(2) Absolute Maximum Ratings indicate limits beyond which damage to the device may occur. Operating Ratings indicate conditions for which the device is functional, but do not ensure specific performance limits. Electrical Characteristics state DC and AC electrical specifications under particular test conditions which specify performance limits. This assumes that the device is within the Operating Ratings. Specifications are not ensure for parameters where no limit is given, however, the typical value is a good indication of device performance.
(3) Typicals are measured at 25°C and represent the parametric norm.
(4) Limits are ensure that all parts are tested in production to meet the stated values.
(5) V_{EE} must have at least −9V at its pin with reference to ground in order for the under-voltage protection circuitry to be disabled. In addition, the voltage differential between V_{CC} and V_{EE} must be greater than 14V.
(6) AC Electrical Test; Refer to Test Circuit #2 (AC Electrical Test Circuit).
(7) For a 4Ω load, and with ±20V supplies, the LM1876 can deliver typically 22W of continuous average output power with less than 0.1% (THD + N). With supplies above ±20V, the LM1876 cannot deliver more than 22W into a 4Ω due to current limiting of the output transistors. Thus, increasing the power supply above ±20V will only increase the internal power dissipation, not the possible output power. Increased power dissipation will require a larger heat sink as explained in Application Information.
(8) DC Electrical Test; Refer to Test Circuit #1 (DC Electrical Test Circuit).
(9) The output dropout voltage, V_{OD}, is the supply voltage minus the clipping voltage. Refer to Figure 16, Figure 17, and Figure 18 in Typical Performance Characteristics.

Copyright © 1999–2013, Texas Instruments Incorporated

Electrical Characteristics [1][2] (continued)

The following specifications apply for V_{CC} = +22V, V_{EE} = −22V with R_L = 8Ω unless otherwise specified. Limits apply for T_A = 25°C.

Symbol	Parameter	Conditions	LM1876		Units (Limits)
			Typical [3]	Limit [4]	
e_{IN} [6]	Input Noise	IHF—A Weighting Filter R_{IN} = 600Ω (Input Referred)	2.0	8	μV (max)
SNR	Signal-to-Noise Ratio	P_O = 1W, A—Weighted, Measured at 1 kHz, R_S = 25Ω P_O = 15W, A—Weighted Measured at 1 kHz, R_S = 25Ω	98 108		dB dB
A_M	Mute Attenuation	Pin 6,11 at 2.5V	115	80	dB (min)
Standby Pin					
V_{IL}	Standby Low Input Voltage	Not in Standby Mode		0.8	V (max)
V_{IH}	Standby High Input Voltage	In Standby Mode	2.0	2.5	V (min)
Mute pin					
V_{IL}	Mute Low Input Voltage	Outputs Not Muted		0.8	V (max)
V_{IH}	Mute High Input Voltage	Outputs Muted	2.0	2.5	V (min)

Copyright © 1999–2013, Texas Instruments Incorporated

Test Circuit #1 (DC Electrical Test Circuit)

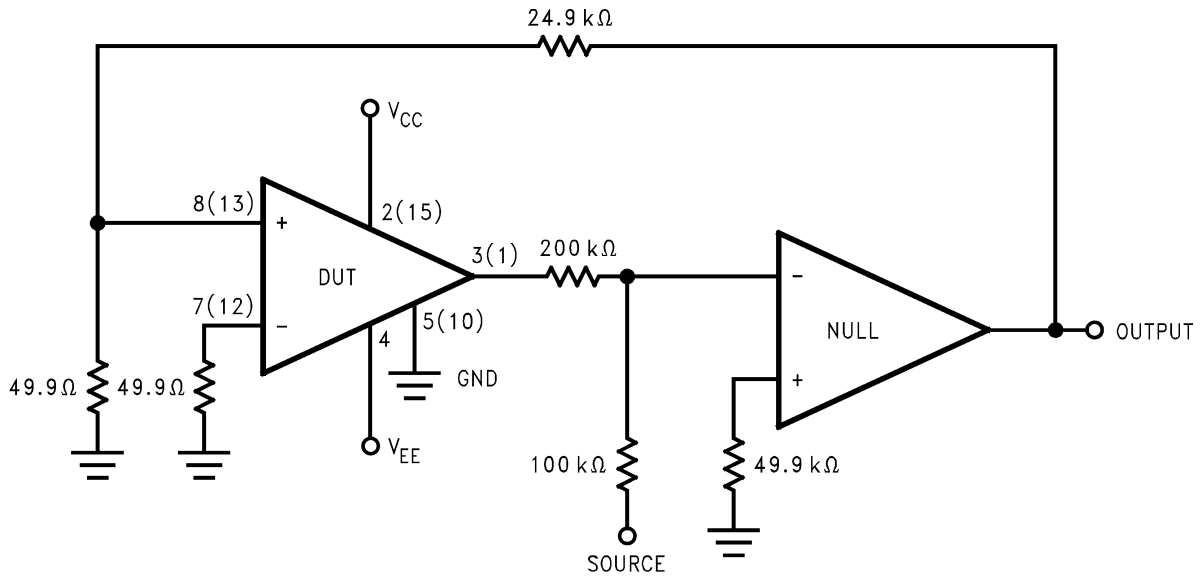

Test Circuit #2 (AC Electrical Test Circuit)

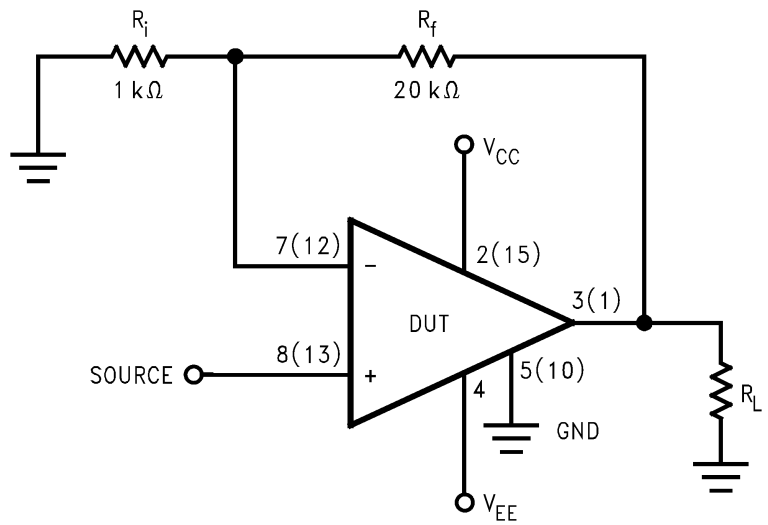

Copyright © 1999–2013, Texas Instruments Incorporated

Bridged Amplifier Application Circuit

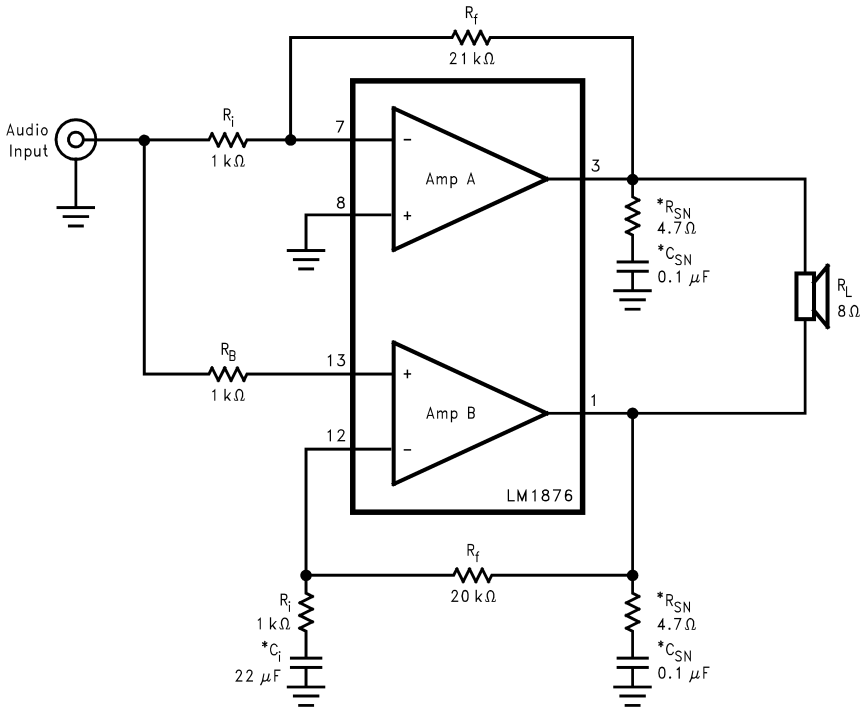

Figure 3. Bridged Amplifier Application Circuit

Single Supply Application Circuit

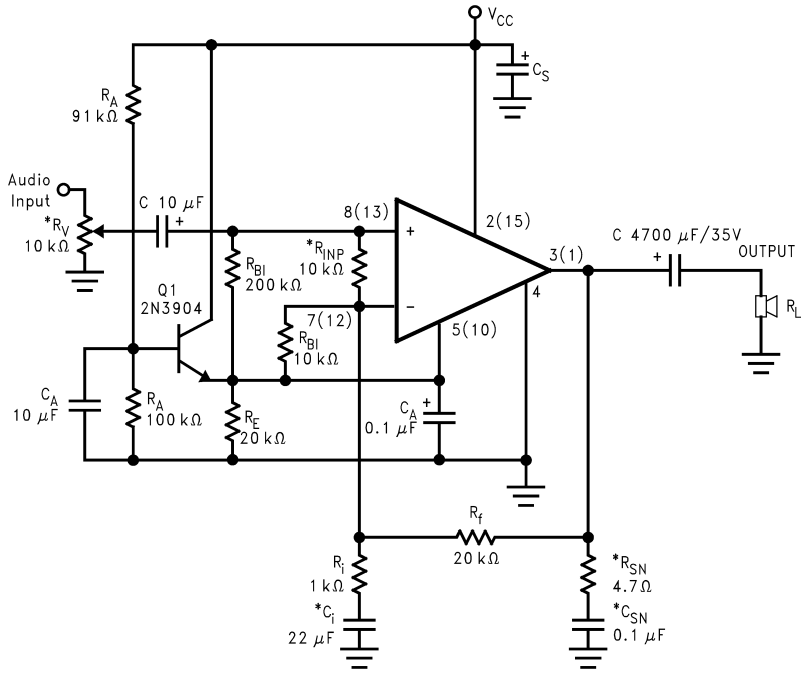

*Optional components dependent upon specific design requirements.

Figure 4. Single Supply Amplifier Application Circuit

Auxiliary Amplifier Application Circuit

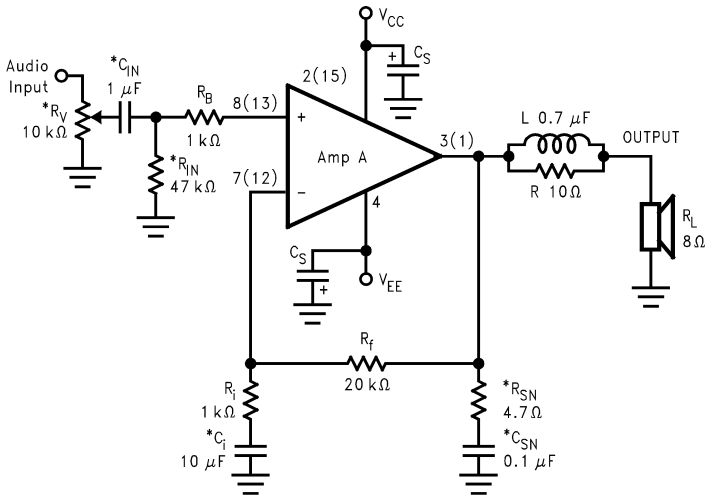

Figure 5. Special Audio Amplifier Application Circuit

Equivalent Schematic

(excluding active protection circuitry)

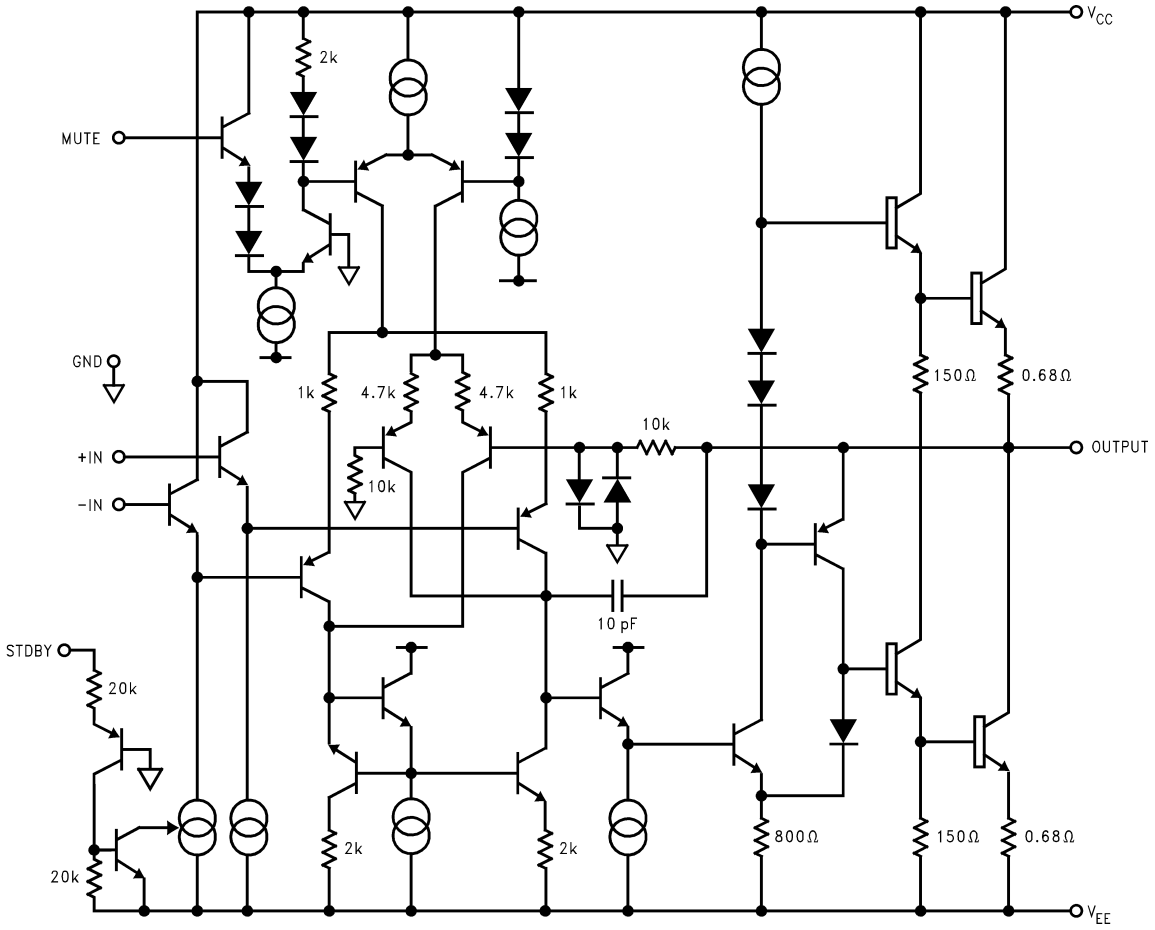

Figure 6. LM1876 (per Amp)

Copyright © 1999–2013, Texas Instruments Incorporated

(excluding active protection circuitry)

External Components Description

Components		Functional Description
1	R_B	Prevents currents from entering the amplifier's non-inverting input which may be passed through to the load upon power down of the system due to the low input impedance of the circuitry when the undervoltage circuitry is off. This phenomenon occurs when the supply voltages are below 1.5V.
2	R_i	Inverting input resistance to provide AC gain in conjunction with R_f.
3	R_f	Feedback resistance to provide AC gain in conjunction with R_i.
4	C_i (1)	Feedback capacitor which ensures unity gain at DC. Also creates a highpass filter with R_i at $f_C = 1/(2\pi R_i C_i)$.
5	C_S	Provides power supply filtering and bypassing. Refer to SUPPLY BYPASSING for proper placement and selection of bypass capacitors.
6	R_V (1)	Acts as a volume control by setting the input voltage level.
7	R_{IN} (1)	Sets the amplifier's input terminals DC bias point when C_{IN} is present in the circuit. Also works with C_{IN} to create a highpass filter at $f_C = 1/(2\pi R_{IN} C_{IN})$. Refer to Figure 5.
8	C_{IN} (1)	Input capacitor which blocks the input signal's DC offsets from being passed onto the amplifier's inputs.
9	R_{SN} (1)	Works with C_{SN} to stabilize the output stage by creating a pole that reduces high frequency instabilities.
10	C_{SN} (1)	Works with R_{SN} to stabilize the output stage by creating a pole that reduces high frequency instabilities. The pole is set at $f_C = 1/(2\pi R_{SN} C_{SN})$. Refer to Figure 5.
11	L (1)	Provides high impedance at high frequencies so that R may decouple a highly capacitive load and reduce the Q of the series resonant circuit. Also provides a low impedance at low frequencies to short out R and pass audio signals to the load. Refer to Figure 5.
12	R (1)	
13	R_A	Provides DC voltage biasing for the transistor Q1 in single supply operation.
14	C_A	Provides bias filtering for single supply operation.
15	R_{INP} (1)	Limits the voltage difference between the amplifier's inputs for single supply operation. Refer to CLICKS AND POPS for a more detailed explanation of the function of R_{INP}.
16	R_{BI}	Provides input bias current for single supply operation. Refer to CLICKS AND POPS for a more detailed explanation of the function of R_{BI}.
17	R_E	Establishes a fixed DC current for the transistor Q1 in single supply operation. This resistor stabilizes the half-supply point along with C_A.

(1) Optional components dependent upon specific design requirements.

Copyright © 1999–2013, Texas Instruments Incorporated

Typical Performance Characteristics

THD + N vs Frequency

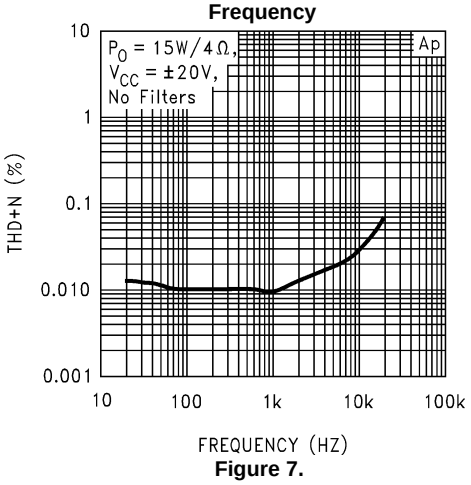

Figure 7.

THD + N vs Frequency

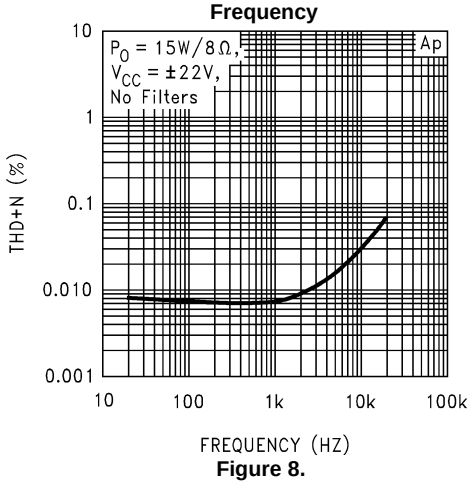

Figure 8.

THD + N vs Frequency

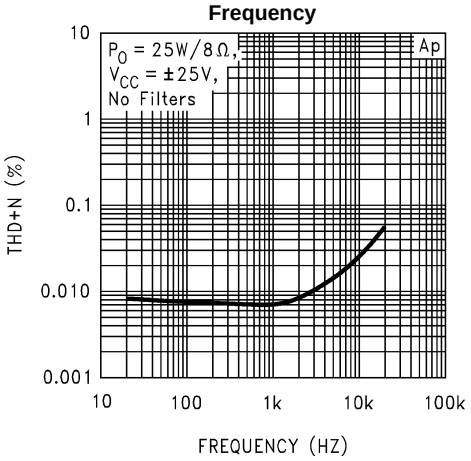

Figure 9.

THD + N vs Output Power

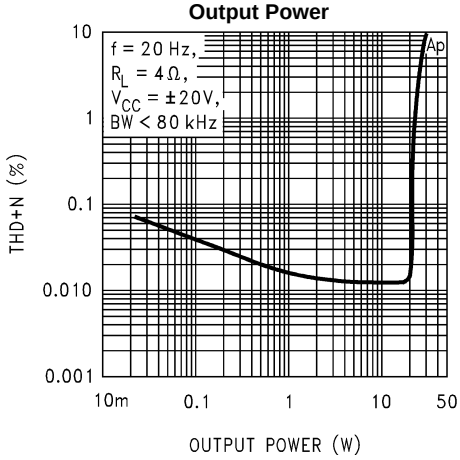

Figure 10.

THD + N vs Output Power

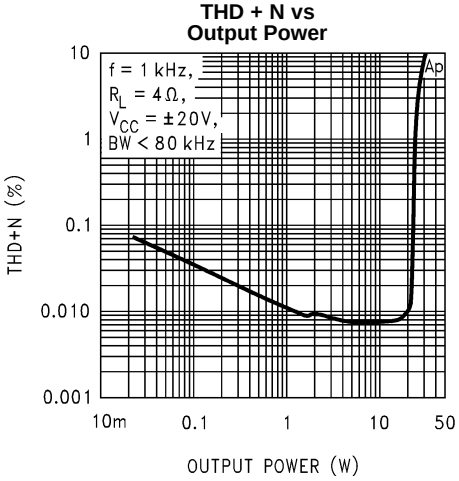

Figure 11.

THD + N vs Output Power

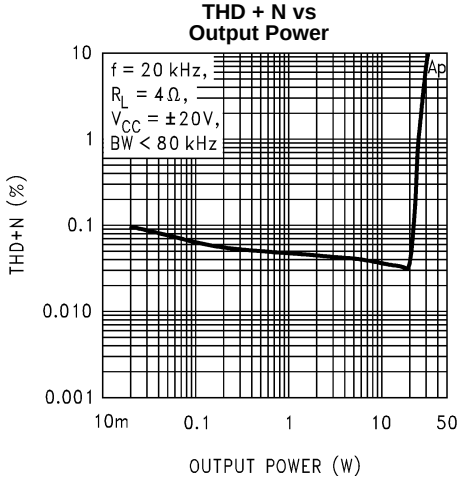

Figure 12.

Copyright © 1999–2013, Texas Instruments Incorporated

Typical Performance Characteristics (continued)

THD + N vs Output Power

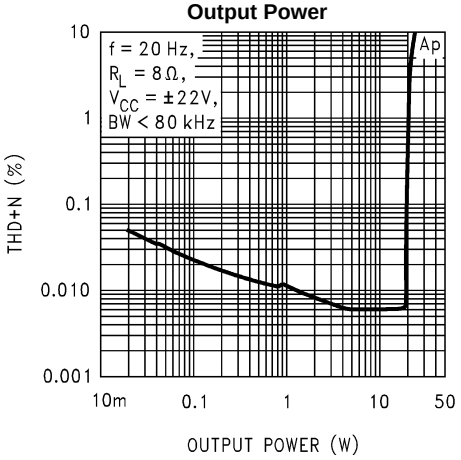

Figure 13.

THD + N vs Output Power

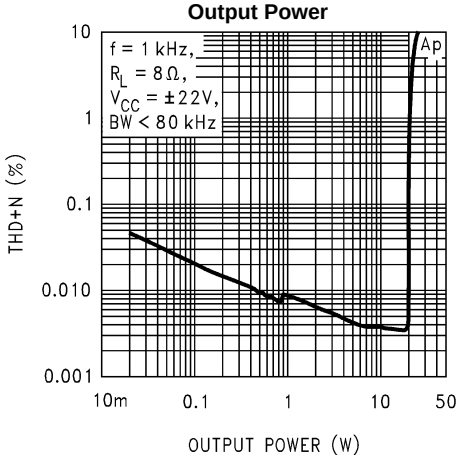

Figure 14.

THD + N vs Output Power

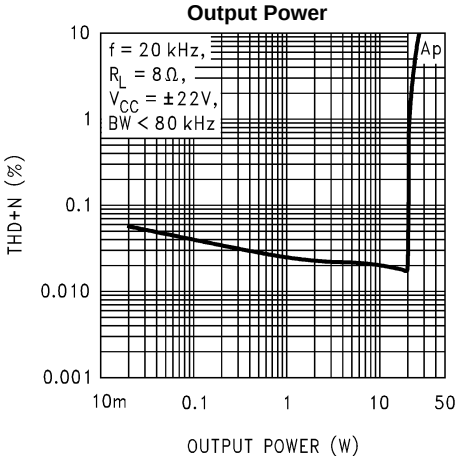

Figure 15.

Clipping Voltage vs Supply Voltage

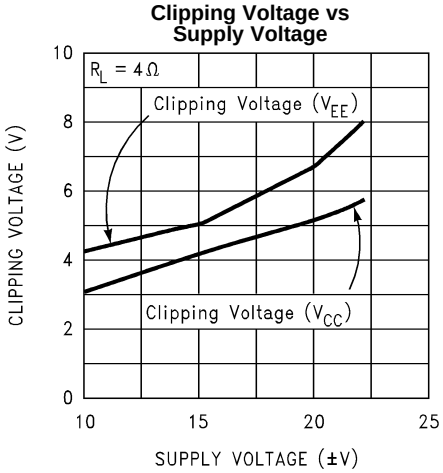

Figure 16.

Clipping Voltage vs Supply Voltage

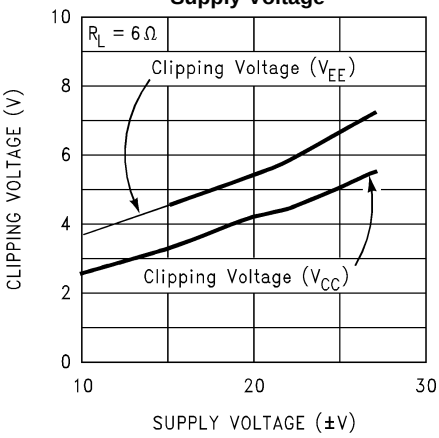

Figure 17.

Clipping Voltage vs Supply Voltage

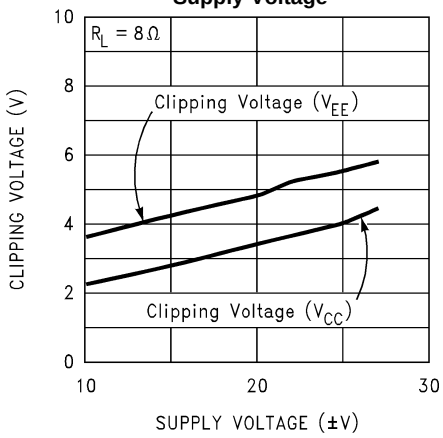

Figure 18.

Copyright © 1999–2013, Texas Instruments Incorporated

Typical Performance Characteristics (continued)

Output Power vs Load Resistance

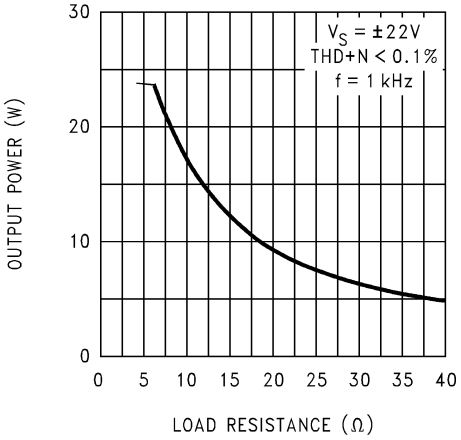

Figure 19.

Power Dissipation vs Output Power

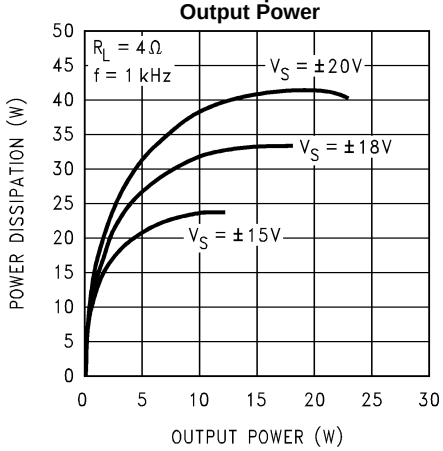

Figure 20.

Power Dissipation vs Output Power

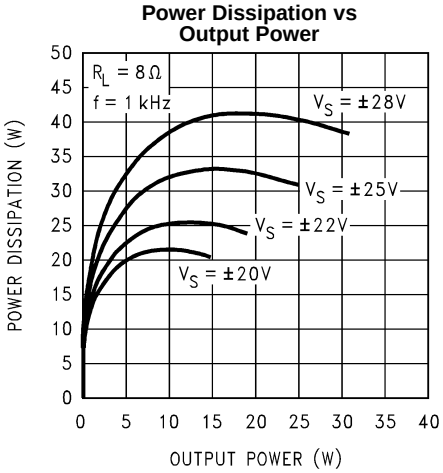

Figure 21.

Output Power vs Supply Voltage

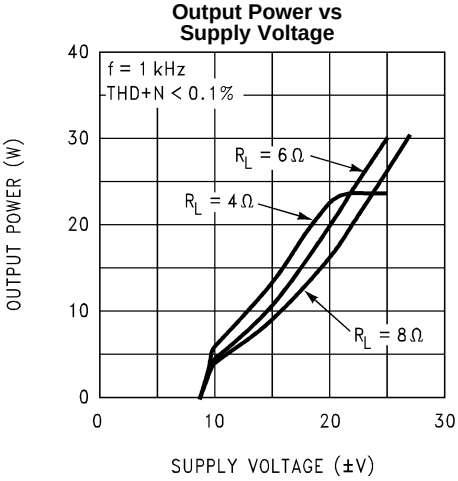

Figure .

Output Mute vs Mute Pin Voltage

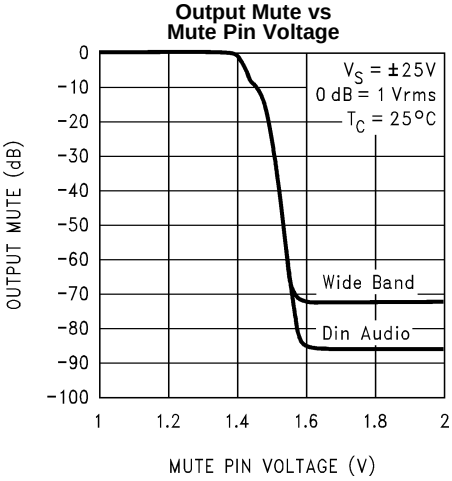

Figure 22.

Output Mute vs Mute Pin Voltage

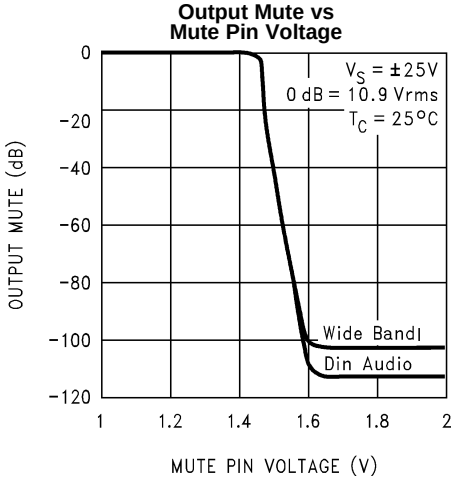

Figure 23.

Copyright © 1999–2013, Texas Instruments Incorporated

Typical Performance Characteristics (continued)

Channel Separation vs Frequency

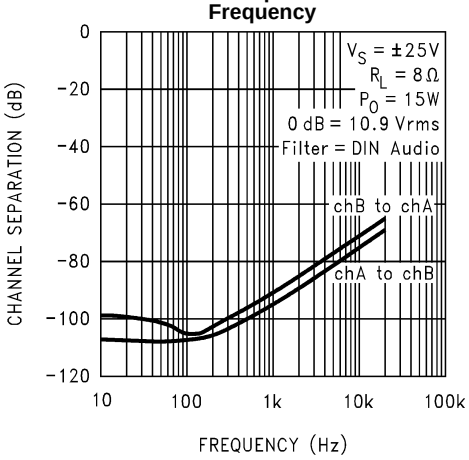

Figure 24.

Pulse Response

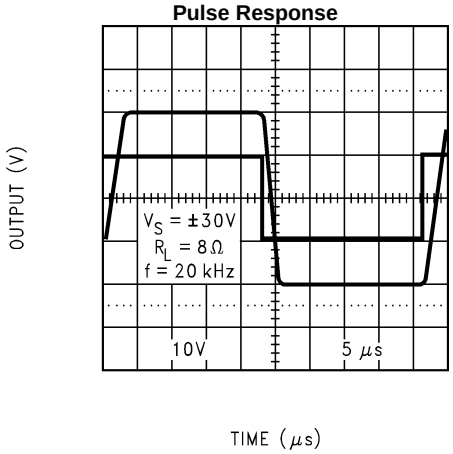

Figure 25.

Large Signal Response

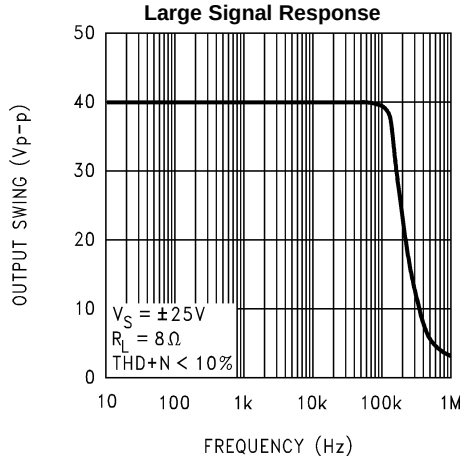

Figure 26.

Power Supply Rejection Ratio

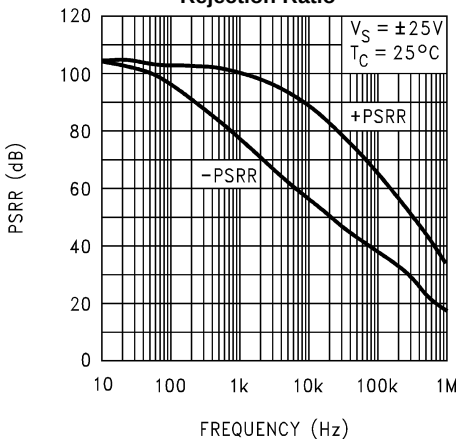

Figure 27.

Common-Mode Rejection Ratio

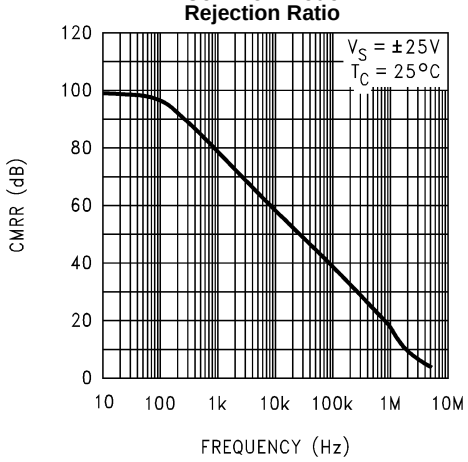

Figure 28.

Open Loop Frequency Response

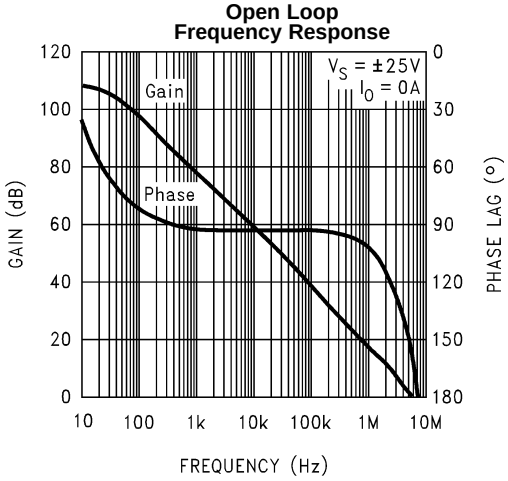

Figure 29.

Typical Performance Characteristics (continued)

Safe Area

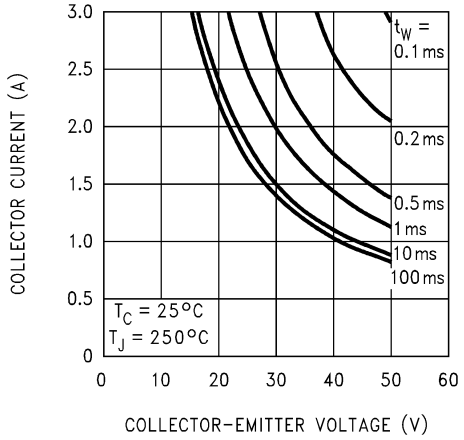

Figure 30.

SPiKe Protection Response

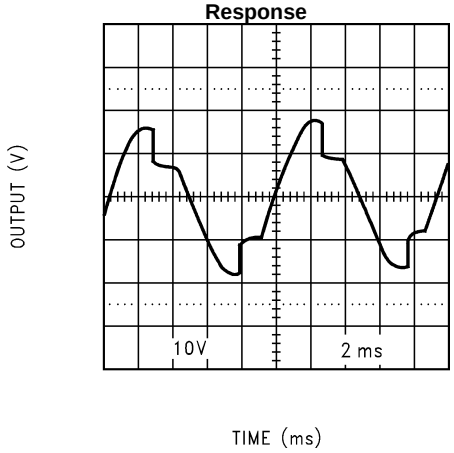

Figure 31.

Supply Current vs Supply Voltage

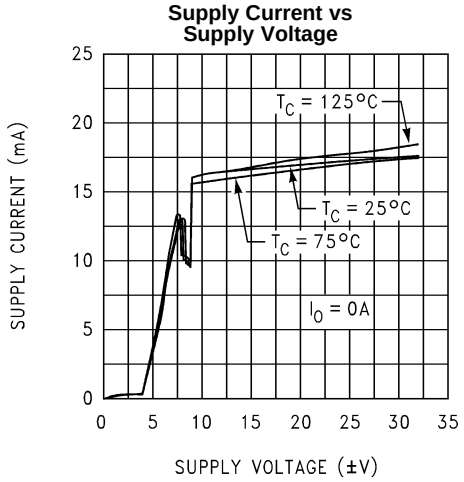

Figure 32.

Pulse Thermal Resistance

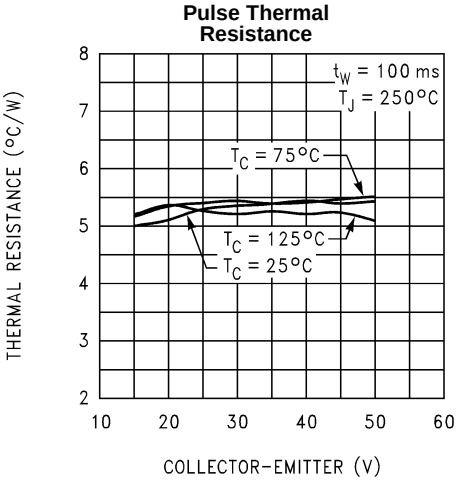

Figure 33.

Pulse Thermal Resistance

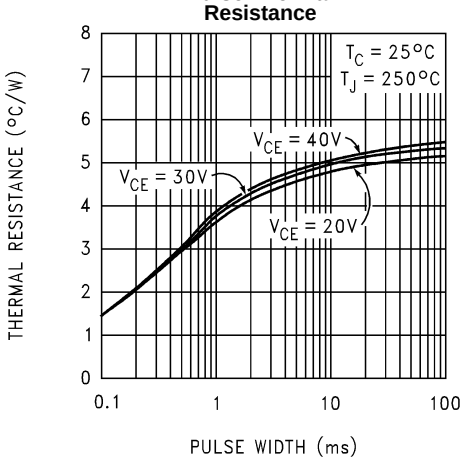

Figure 34.

Supply Current vs Output Voltage

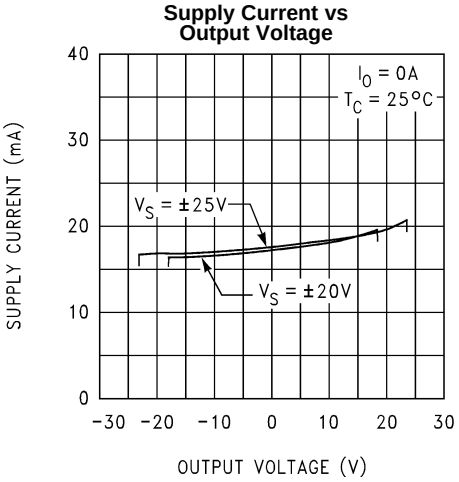

Figure 35.

Copyright © 1999–2013, Texas Instruments Incorporated

Typical Performance Characteristics (continued)

Pulse Power Limit

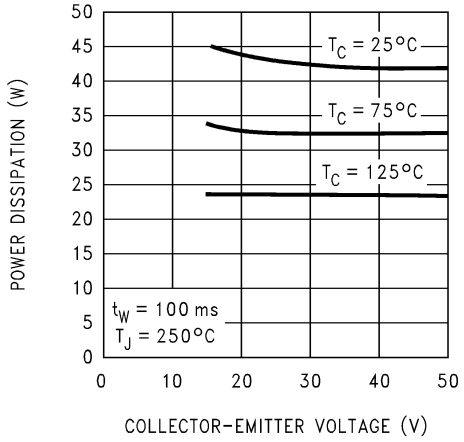

Figure 36.

Pulse Power Limit

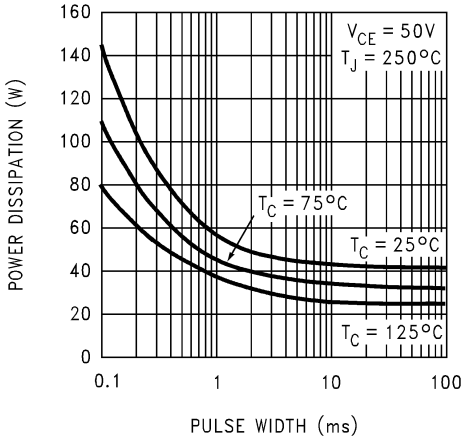

Figure 37.

Supply Current vs Case Temperature

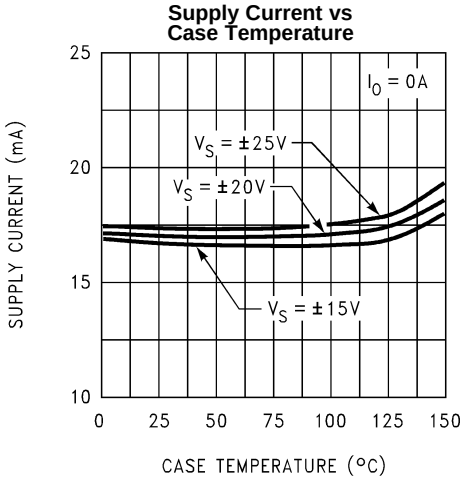

Figure 38.

Supply Current (I_{CC}) vs Standby Pin Voltage

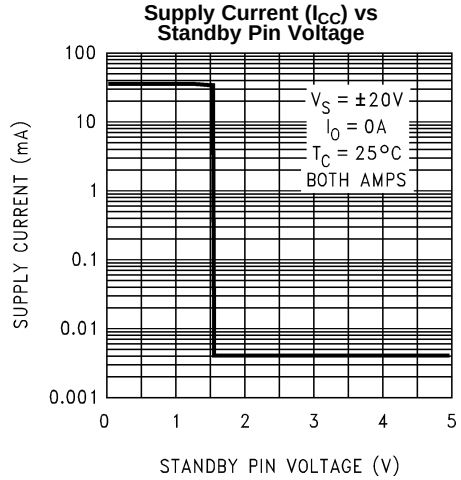

Figure 39.

Supply Current (I_{EE}) vs Standby Pin Voltage

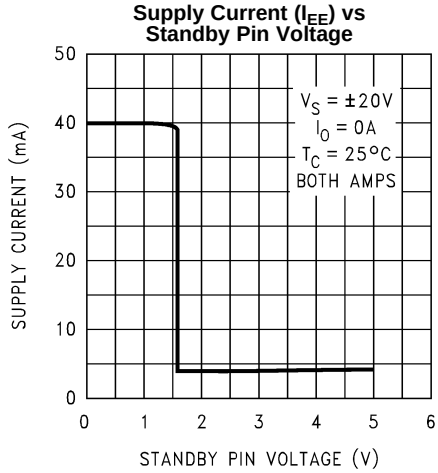

Figure 40.

Input Bias Current vs Case Temperature

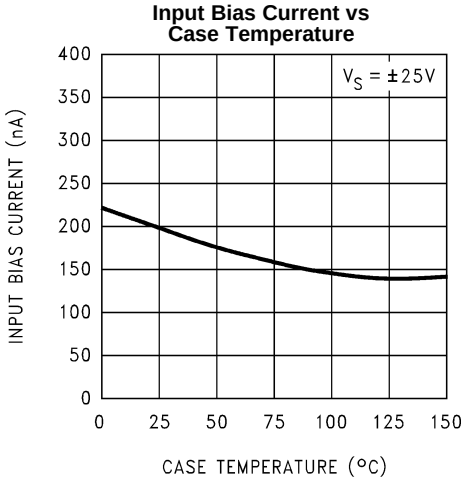

Figure 41.

Typical Performance Characteristics (continued)

Output Power/Channel vs Supply Voltage
f = 1kHz, R_L = 4Ω, 80kHz BW

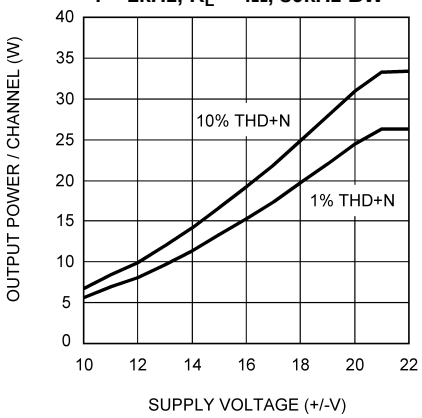

Figure 42.

Output Power/Channel vs Supply Voltage
f = 1kHz, R_L = 6Ω, 80kHz BW

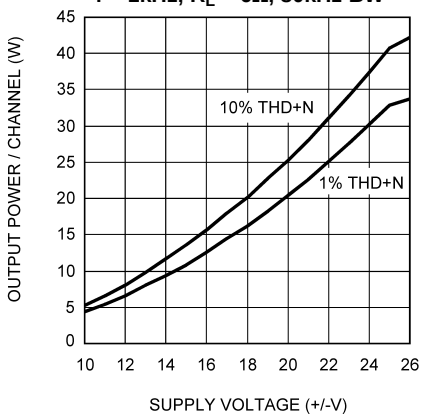

Figure 43.

Output Power/Channel vs Supply Voltage
f = 1kHz, R_L = 8Ω, 80kHz BW

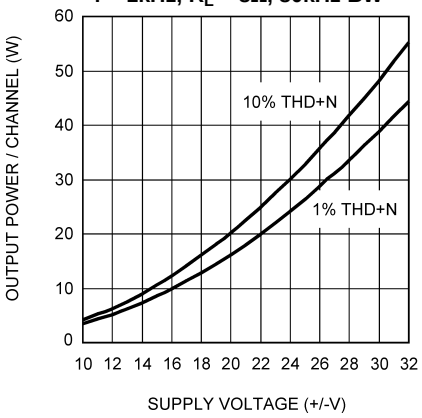

Figure 44.

Copyright © 1999–2013, Texas Instruments Incorporated

APPLICATION INFORMATION

MUTE MODE

By placing a logic-high voltage on the mute pins, the signal going into the amplifiers will be muted. If the mute pins are left floating or connected to a logic-low voltage, the amplifiers will be in a non-muted state. There are two mute pins, one for each amplifier, so that one channel can be muted without muting the other if the application requires such a configuration. Refer to Typical Performance Characteristics for Figure 22 and Figure 23.

STANDBY MODE

The standby mode of the LM1876 allows the user to drastically reduce power consumption when the amplifiers are idle. By placing a logic-high voltage on the standby pins, the amplifiers will go into Standby Mode. In this mode, the current drawn from the V_{CC} supply is typically less than 10 µA total for both amplifiers. The current drawn from the V_{EE} supply is typically 4.2 mA. Clearly, there is a significant reduction in idle power consumption when using the standby mode. There are two Standby pins, so that one channel can be put in standby mode without putting the other amplifier in standby if the application requires such flexibility. Refer to Typical Performance Characteristics for Figure 39 and Figure 40.

UNDER-VOLTAGE PROTECTION

Upon system power-up, the under-voltage protection circuitry allows the power supplies and their corresponding capacitors to come up close to their full values before turning on the LM1876 such that no DC output spikes occur. Upon turn-off, the output of the LM1876 is brought to ground before the power supplies such that no transients occur at power-down.

OVER-VOLTAGE PROTECTION

The LM1876 contains over-voltage protection circuitry that limits the output current to approximately 3.5 Apk while also providing voltage clamping, though not through internal clamping diodes. The clamping effect is quite the same, however, the output transistors are designed to work alternately by sinking large current spikes.

SPiKe PROTECTION

The LM1876 is protected from instantaneous peak-temperature stressing of the power transistor array. The Figure 30 in Typical Performance Characteristics shows the area of device operation where SPiKe Protection Circuitry is not enabled. The waveform to the right of the SOA graph exemplifies how the dynamic protection will cause waveform distortion when enabled.

THERMAL PROTECTION

The LM1876 has a sophisticated thermal protection scheme to prevent long-term thermal stress of the device. When the temperature on the die reaches 165°C, the LM1876 shuts down. It starts operating again when the die temperature drops to about 155°C, but if the temperature again begins to rise, shutdown will occur again at 165°C. Therefore, the device is allowed to heat up to a relatively high temperature if the fault condition is temporary, but a sustained fault will cause the device to cycle in a Schmitt Trigger fashion between the thermal shutdown temperature limits of 165°C and 155°C. This greatly reduces the stress imposed on the IC by thermal cycling, which in turn improves its reliability under sustained fault conditions.

Since the die temperature is directly dependent upon the heat sink used, the heat sink should be chosen such that thermal shutdown will not be reached during normal operation. Using the best heat sink possible within the cost and space constraints of the system will improve the long-term reliability of any power semiconductor device, as discussed in DETERMINING THE CORRECT HEAT SINK.

DETERMINING MAXIMUM POWER DISSIPATION

Power dissipation within the integrated circuit package is a very important parameter requiring a thorough understanding if optimum power output is to be obtained. An incorrect maximum power dissipation calculation may result in inadequate heat sinking causing thermal shutdown and thus limiting the output power.

Copyright © 1999–2013, Texas Instruments Incorporated

Equation 1 exemplifies the theoretical maximum power dissipation point of each amplifier where V_{CC} is the total supply voltage.

$$P_{DMAX} = V_{CC}2/2\pi^2R_L \quad (1)$$

Thus by knowing the total supply voltage and rated output load, the maximum power dissipation point can be calculated. The package dissipation is twice the number which results from Equation 1 since there are two amplifiers in each LM1876. Refer to Figure 21 and Figure 20 in Typical Performance Characteristics which show the actual full range of power dissipation not just the maximum theoretical point that results from Equation 1.

DETERMINING THE CORRECT HEAT SINK

The choice of a heat sink for a high-power audio amplifier is made entirely to keep the die temperature at a level such that the thermal protection circuitry does not operate under normal circumstances.

The thermal resistance from the die (junction) to the outside air (ambient) is a combination of three thermal resistances, θ_{JC}, θ_{CS}, and θ_{SA}. In addition, the thermal resistance, θ_{JC} (junction to case), of the LM1876TF is 2°C/W and the LM1876T is 1°C/W. Using Thermalloy Thermacote thermal compound, the thermal resistance, θ_{CS} (case to sink), is about 0.2°C/W. Since convection heat flow (power dissipation) is analogous to current flow, thermal resistance is analogous to electrical resistance, and temperature drops are analogous to voltage drops, the power dissipation out of the LM1876 is equal to the following:

$$P_{DMAX} = (T_{JMAX} - T_{AMB})/\theta_{JA}$$

where

- T_{JMAX} = 150°C
- T_{AMB} is the system ambient temperature
- $\theta_{JA} = \theta_{JC} + \theta_{CS} + \theta_{SA}$ (2)

Once the maximum package power dissipation has been calculated using Equation 1, the maximum thermal resistance, θ_{SA}, (heat sink to ambient) in °C/W for a heat sink can be calculated. This calculation is made using Equation 3 which is derived by solving for θ_{SA} in Equation 2.

$$\theta_{SA} = [(T_{JMAX} - T_{AMB}) - P_{DMAX}(\theta_{JC} + \theta_{CS})]/P_{DMAX} \quad (3)$$

Again it must be noted that the value of θ_{SA} is dependent upon the system designer's amplifier requirements. If the ambient temperature that the audio amplifier is to be working under is higher than 25°C, then the thermal resistance for the heat sink, given all other things are equal, will need to be smaller.

SUPPLY BYPASSING

The LM1876 has excellent power supply rejection and does not require a regulated supply. However, to improve system performance as well as eliminate possible oscillations, the LM1876 should have its supply leads bypassed with low-inductance capacitors having short leads that are located close to the package terminals. Inadequate power supply bypassing will manifest itself by a low frequency oscillation known as “motorboating” or by high frequency instabilities. These instabilities can be eliminated through multiple bypassing utilizing a large tantalum or electrolytic capacitor (10 µF or larger) which is used to absorb low frequency variations and a small ceramic capacitor (0.1 µF) to prevent any high frequency feedback through the power supply lines.

If adequate bypassing is not provided, the current in the supply leads which is a rectified component of the load current may be fed back into internal circuitry. This signal causes distortion at high frequencies requiring that the supplies be bypassed at the package terminals with an electrolytic capacitor of 470 µF or more.

BRIDGED AMPLIFIER APPLICATION

The LM1876 has two operational amplifiers internally, allowing for a few different amplifier configurations. One of these configurations is referred to as “bridged mode” and involves driving the load differentially through the LM1876's outputs. This configuration is shown in Figure 3. Bridged mode operation is different from the classical single-ended amplifier configuration where one side of its load is connected to ground.

A bridge amplifier design has a distinct advantage over the single-ended configuration, as it provides differential drive to the load, thus doubling output swing for a specified supply voltage. Consequently, theoretically four times the output power is possible as compared to a single-ended amplifier under the same conditions. This increase in attainable output power assumes that the amplifier is not current limited or clipped.

Copyright © 1999–2013, Texas Instruments Incorporated

A direct consequence of the increased power delivered to the load by a bridge amplifier is an increase in internal power dissipation. For each operational amplifier in a bridge configuration, the internal power dissipation will increase by a factor of two over the single ended dissipation. Thus, for an audio power amplifier such as the LM1876, which has two operational amplifiers in one package, the package dissipation will increase by a factor of four. To calculate the LM1876's maximum power dissipation point for a bridged load, multiply Equation 1 by a factor of four.

This value of P_{DMAX} can be used to calculate the correct size heat sink for a bridged amplifier application. Since the internal dissipation for a given power supply and load is increased by using bridged-mode, the heatsink's θ_{SA} will have to decrease accordingly as shown by Equation 3. Refer to DETERMINING THE CORRECT HEAT SINK for a more detailed discussion of proper heat sinking for a given application.

SINGLE-SUPPLY AMPLIFIER APPLICATION

The typical application of the LM1876 is a split supply amplifier. But as shown in Figure 4, the LM1876 can also be used in a single power supply configuration. This involves using some external components to create a half-supply bias which is used as the reference for the inputs and outputs. Thus, the signal will swing around half-supply much like it swings around ground in a split-supply application. Along with proper circuit biasing, a few other considerations must be accounted for to take advantage of all of the LM1876 functions.

The LM1876 possesses a mute and standby function with internal logic gates that are half-supply referenced. Thus, to enable either the Mute or Standby function, the voltage at these pins must be a minimum of 2.5V above half-supply. In single-supply systems, devices such as microprocessors and simple logic circuits used to control the mute and standby functions, are usually referenced to ground, not half-supply. Thus, to use these devices to control the logic circuitry of the LM1876, a “level shifter,” like the one shown in Figure 45, must be employed. A level shifter is not needed in a split-supply configuration since ground is also half-supply.

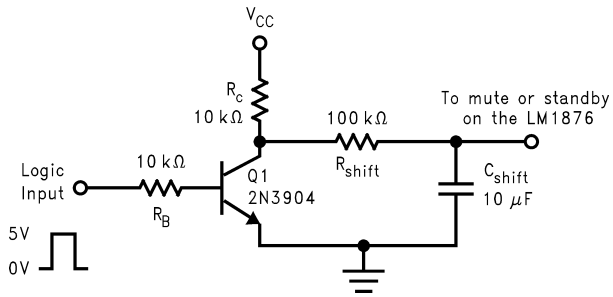

Figure 45. Level Shift Circuit

When the voltage at the Logic Input node is 0V, the 2N3904 is “off” and thus resistor R_c pulls up mute or standby input to the supply. This enables the mute or standby function. When the Logic Input is 5V, the 2N3904 is “on” and consequently, the voltage at the collector is essentially 0V. This will disable the mute or standby function, and thus the amplifier will be in its normal mode of operation. R_{shift}, along with C_{shift}, creates an RC time constant that reduces transients when the mute or standby functions are enabled or disabled. Additionally, R_{shift} limits the current supplied by the internal logic gates of the LM1876 which insures device reliability. Refer to MUTE MODE and STANDBY MODE in Application Information for a more detailed description of these functions.

CLICKS AND POPS

In the typical application of the LM1876 as a split-supply audio power amplifier, the IC exhibits excellent “click” and “pop” performance when utilizing the mute and standby modes. In addition, the device employs Under-Voltage Protection, which eliminates unwanted power-up and power-down transients. The basis for these functions are a stable and constant half-supply potential. In a split-supply application, ground is the stable half-supply potential. But in a single-supply application, the half-supply needs to charge up just like the supply rail, V_{CC}. This makes the task of attaining a clickless and popless turn-on more challenging. Any uneven charging of the amplifier inputs will result in output clicks and pops due to the differential input topology of the LM1876.

Copyright © 1999–2013, Texas Instruments Incorporated

To achieve a transient free power-up and power-down, the voltage seen at the input terminals should be ideally the same. Such a signal will be common-mode in nature, and will be rejected by the LM1876. In Figure 4, the resistor R_{INP} serves to keep the inputs at the same potential by limiting the voltage difference possible between the two nodes. This should significantly reduce any type of turn-on pop, due to an uneven charging of the amplifier inputs. This charging is based on a specific application loading and thus, the system designer may need to adjust these values for optimal performance.

As shown in Figure 4, the resistors labeled R_{BI} help bias up the LM1876 off the half-supply node at the emitter of the 2N3904. But due to the input and output coupling capacitors in the circuit, along with the negative feedback, there are two different values of R_{BI}, namely 10 kΩ and 200 kΩ. These resistors bring up the inputs at the same rate resulting in a popless turn-on. Adjusting these resistors values slightly may reduce pops resulting from power supplies that ramp extremely quick or exhibit overshoot during system turn-on.

AUDIO POWER AMPLIFIER DESIGN

Design a 15W/8Ω Audio Amplifier

Given:

Power Output	15 Wrms
Load Impedance	8Ω
Input Level	1 Vrms(max)
Input Impedance	47 kΩ
Bandwidth	20 Hz−20 kHz ±0.25 dB

A designer must first determine the power supply requirements in terms of both voltage and current needed to obtain the specified output power. V_{OPEAK} can be determined from Equation 4 and I_{OPEAK} from Equation 5.

$$V_{OPEAK} = \sqrt{(2R_L P_O)} \tag{4}$$

$$I_{OPEAK} = \sqrt{(2P_O)/R_L} \tag{5}$$

To determine the maximum supply voltage the following conditions must be considered. Add the dropout voltage to the peak output swing V_{OPEAK}, to get the supply rail at a current of I_{OPEAK}. The regulation of the supply determines the unloaded voltage which is usually about 15% higher. The supply voltage will also rise 10% during high line conditions. Therefore the maximum supply voltage is obtained from the following equation.

$$\text{Max supplies} \approx \pm (V_{OPEAK} + V_{OD})\ (1 + \text{regulation})\ (1.1) \tag{6}$$

For 15W of output power into an 8Ω load, the required V_{OPEAK} is 15.49V. A minimum supply rail of 20.5V results from adding V_{OPEAK} and V_{OD}. With regulation, the maximum supplies are ±26V and the required I_{OPEAK} is 1.94A from Equation 5. It should be noted that for a dual 15W amplifier into an 8Ω load the I_{OPEAK} drawn from the supplies is twice 1.94 Apk or 3.88 Apk. At this point it is a good idea to check the Power Output vs Supply Voltage to ensure that the required output power is obtainable from the device while maintaining low THD+N. In addition, the designer should verify that with the required power supply voltage and load impedance, that the required heatsink value θ_{SA} is feasible given system cost and size constraints. Once the heatsink issues have been addressed, the required gain can be determined from Equation 7.

$$A_V \geq \sqrt{(P_O R_L)}/(V_{IN}) = V_{ORMS}/V_{INRMS} \tag{7}$$

From Equation 7, the minimum A_V is: $A_V \geq 11$.

By selecting a gain of 21, and with a feedback resistor, R_f = 20 kΩ, the value of R_i follows from Equation 8.

$$R_i = R_f\ (A_V - 1) \tag{8}$$

Thus with R_i = 1 kΩ a non-inverting gain of 21 will result. Since the desired input impedance was 47 kΩ, a value of 47 kΩ was selected for R_{IN}. The final design step is to address the bandwidth requirements which must be stated as a pair of −3 dB frequency points. Five times away from a −3 dB point is 0.17 dB down from passband response which is better than the required ±0.25 dB specified. This fact results in a low and high frequency pole of 4 Hz and 100 kHz respectively. As stated in External Components Description, R_i in conjunction with C_i create a high-pass filter.

$$C_i \geq 1/(2\pi * 1\ \text{k}\Omega * 4\ \text{Hz}) = 39.8\ \mu\text{F}; \quad \text{use } 39\ \mu\text{F}. \tag{9}$$

Copyright © 1999–2013, Texas Instruments Incorporated

The high frequency pole is determined by the product of the desired high frequency pole, f_H, and the gain, A_V. With a A_V = 21 and f_H = 100 kHz, the resulting GBWP is 2.1 MHz, which is less than the minimum GBWP of the LM1876 of 5 MHz. This will ensure that the high frequency response of the amplifier will be no worse than 0.17 dB down at 20 kHz which is well within the bandwidth requirements of the design.

Copyright © 1999–2013, Texas Instruments Incorporated

REVISION HISTORY

Changes from Revision B (April 2013) to Revision C	Page
• Changed layout of National Data Sheet to TI format	21

Copyright © 1999–2013, Texas Instruments Incorporated

PACKAGING INFORMATION

Orderable Device	Status (1)	Package Type	Package Drawing	Pins	Package Qty	Eco Plan (2)	Lead/Ball Finish	MSL Peak Temp (3)	Op Temp (°C)	Device Marking (4/5)	Samples
LM1876T	ACTIVE	TO-220	NDL	15	20	TBD	Call TI	Call TI	-20 to 85	LM1876T	Samples
LM1876T/NOPB	ACTIVE	TO-220	NDL	15	20	Green (RoHS & no Sb/Br)	CU SN	Level-1-NA-UNLIM	-20 to 85	LM1876T	Samples
LM1876TF	ACTIVE	TO-220	NDB	15	20	TBD	Call TI	Call TI	-20 to 85	LM1876TF	Samples
LM1876TF/NOPB	ACTIVE	TO-220	NDB	15	20	Pb-Free (RoHS Exempt)	CU SN	Level-1-NA-UNLIM	-20 to 85	LM1876TF	Samples

(1) The marketing status values are defined as follows:
ACTIVE: Product device recommended for new designs.
LIFEBUY: TI has announced that the device will be discontinued, and a lifetime-buy period is in effect.
NRND: Not recommended for new designs. Device is in production to support existing customers, but TI does not recommend using this part in a new design.
PREVIEW: Device has been announced but is not in production. Samples may or may not be available.
OBSOLETE: TI has discontinued the production of the device.

(2) Eco Plan - The planned eco-friendly classification: Pb-Free (RoHS), Pb-Free (RoHS Exempt), or Green (RoHS & no Sb/Br) - please check http://www.ti.com/productcontent for the latest availability information and additional product content details.
TBD: The Pb-Free/Green conversion plan has not been defined.
Pb-Free (RoHS): TI's terms "Lead-Free" or "Pb-Free" mean semiconductor products that are compatible with the current RoHS requirements for all 6 substances, including the requirement that lead not exceed 0.1% by weight in homogeneous materials. Where designed to be soldered at high temperatures, TI Pb-Free products are suitable for use in specified lead-free processes.
Pb-Free (RoHS Exempt): This component has a RoHS exemption for either 1) lead-based flip-chip solder bumps used between the die and package, or 2) lead-based die adhesive used between the die and leadframe. The component is otherwise considered Pb-Free (RoHS compatible) as defined above.
Green (RoHS & no Sb/Br): TI defines "Green" to mean Pb-Free (RoHS compatible), and free of Bromine (Br) and Antimony (Sb) based flame retardants (Br or Sb do not exceed 0.1% by weight in homogeneous material)

(3) MSL, Peak Temp. -- The Moisture Sensitivity Level rating according to the JEDEC industry standard classifications, and peak solder temperature.

(4) There may be additional marking, which relates to the logo, the lot trace code information, or the environmental category on the device.

(5) Multiple Device Markings will be inside parentheses. Only one Device Marking contained in parentheses and separated by a "~" will appear on a device. If a line is indented then it is a continuation of the previous line and the two combined represent the entire Device Marking for that device.

Important Information and Disclaimer: The information provided on this page represents TI's knowledge and belief as of the date that it is provided. TI bases its knowledge and belief on information provided by third parties, and makes no representation or warranty as to the accuracy of such information. Efforts are underway to better integrate information from third parties. TI has taken and continues to take reasonable steps to provide representative and accurate information but may not have conducted destructive testing or chemical analysis on incoming materials and chemicals. TI and TI suppliers consider certain information to be proprietary, and thus CAS numbers and other limited information may not be available for release.

In no event shall TI's liability arising out of such information exceed the total purchase price of the TI part(s) at issue in this document sold by TI to Customer on an annual basis.

NDL0015A

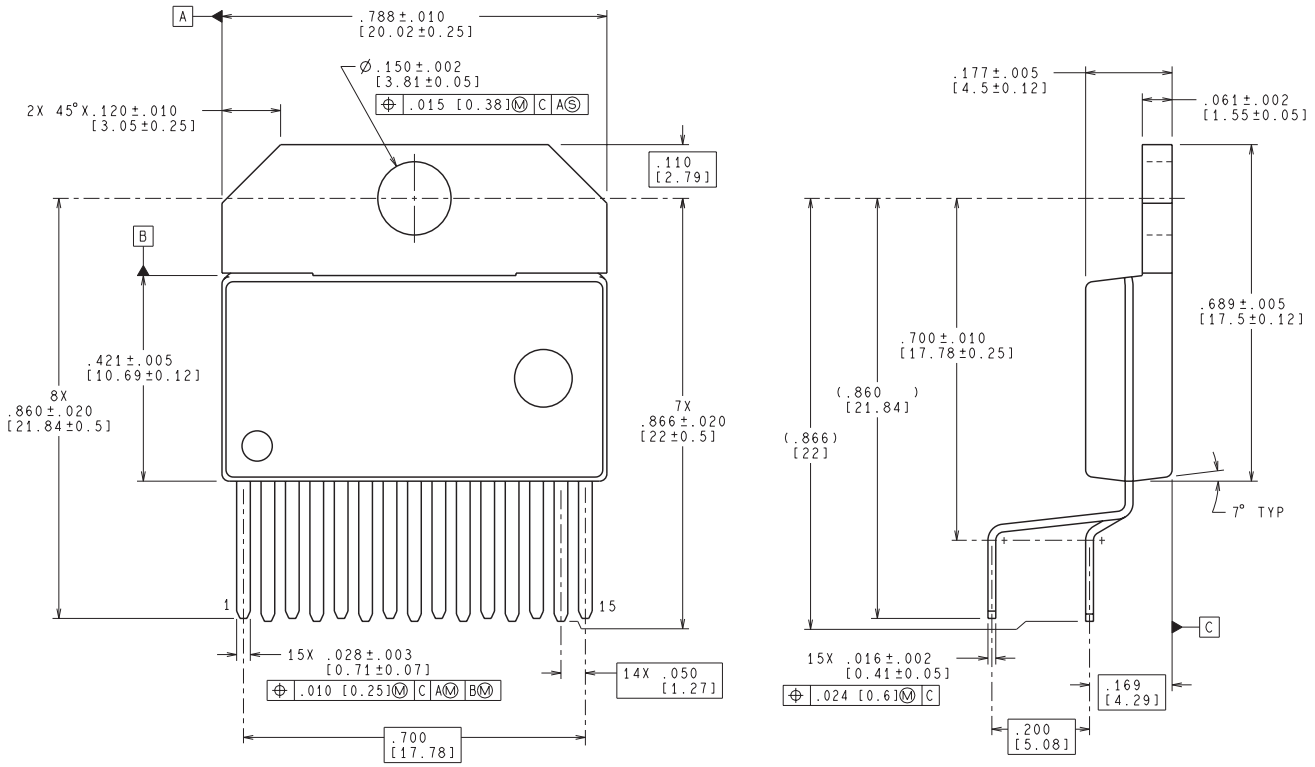

CONTROLLING DIMENSION IS INCH
VALUES IN [ ] ARE MILLIMETERS

TA15A (Rev B)

NDB0015B

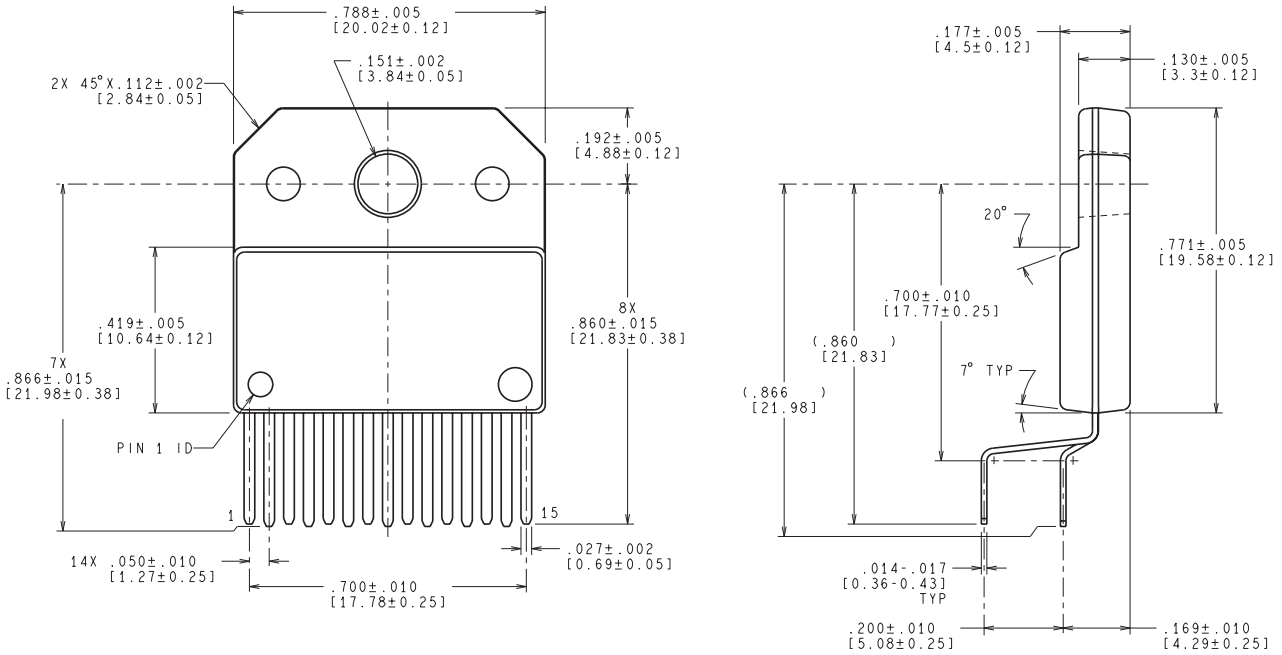

CONTROLLING DIMENSION IS INCH
VALUES IN [ ] ARE MILLIMETERS
DIMMENSIONS IN ( ) FOR REFERENCE ONLY

TF15B (REV B)

IMPORTANT NOTICE

Texas Instruments Incorporated and its subsidiaries (TI) reserve the right to make corrections, enhancements, improvements and other changes to its semiconductor products and services per JESD46, latest issue, and to discontinue any product or service per JESD48, latest issue. Buyers should obtain the latest relevant information before placing orders and should verify that such information is current and complete. All semiconductor products (also referred to herein as “components”) are sold subject to TI’s terms and conditions of sale supplied at the time of order acknowledgment.

TI warrants performance of its components to the specifications applicable at the time of sale, in accordance with the warranty in TI’s terms and conditions of sale of semiconductor products. Testing and other quality control techniques are used to the extent TI deems necessary to support this warranty. Except where mandated by applicable law, testing of all parameters of each component is not necessarily performed.

TI assumes no liability for applications assistance or the design of Buyers’ products. Buyers are responsible for their products and applications using TI components. To minimize the risks associated with Buyers’ products and applications, Buyers should provide adequate design and operating safeguards.

TI does not warrant or represent that any license, either express or implied, is granted under any patent right, copyright, mask work right, or other intellectual property right relating to any combination, machine, or process in which TI components or services are used. Information published by TI regarding third-party products or services does not constitute a license to use such products or services or a warranty or endorsement thereof. Use of such information may require a license from a third party under the patents or other intellectual property of the third party, or a license from TI under the patents or other intellectual property of TI.

Reproduction of significant portions of TI information in TI data books or data sheets is permissible only if reproduction is without alteration and is accompanied by all associated warranties, conditions, limitations, and notices. TI is not responsible or liable for such altered documentation. Information of third parties may be subject to additional restrictions.

Resale of TI components or services with statements different from or beyond the parameters stated by TI for that component or service voids all express and any implied warranties for the associated TI component or service and is an unfair and deceptive business practice. TI is not responsible or liable for any such statements.

Buyer acknowledges and agrees that it is solely responsible for compliance with all legal, regulatory and safety-related requirements concerning its products, and any use of TI components in its applications, notwithstanding any applications-related information or support that may be provided by TI. Buyer represents and agrees that it has all the necessary expertise to create and implement safeguards which anticipate dangerous consequences of failures, monitor failures and their consequences, lessen the likelihood of failures that might cause harm and take appropriate remedial actions. Buyer will fully indemnify TI and its representatives against any damages arising out of the use of any TI components in safety-critical applications.

In some cases, TI components may be promoted specifically to facilitate safety-related applications. With such components, TI’s goal is to help enable customers to design and create their own end-product solutions that meet applicable functional safety standards and requirements. Nonetheless, such components are subject to these terms.

No TI components are authorized for use in FDA Class III (or similar life-critical medical equipment) unless authorized officers of the parties have executed a special agreement specifically governing such use.

Only those TI components which TI has specifically designated as military grade or “enhanced plastic” are designed and intended for use in military/aerospace applications or environments. Buyer acknowledges and agrees that any military or aerospace use of TI components which have ***not*** been so designated is solely at the Buyer's risk, and that Buyer is solely responsible for compliance with all legal and regulatory requirements in connection with such use.

TI has specifically designated certain components as meeting ISO/TS16949 requirements, mainly for automotive use. In any case of use of non-designated products, TI will not be responsible for any failure to meet ISO/TS16949.

Products		**Applications**	
Audio	www.ti.com/audio	Automotive and Transportation	www.ti.com/automotive
Amplifiers	amplifier.ti.com	Communications and Telecom	www.ti.com/communications
Data Converters	dataconverter.ti.com	Computers and Peripherals	www.ti.com/computers
DLP® Products	www.dlp.com	Consumer Electronics	www.ti.com/consumer-apps
DSP	dsp.ti.com	Energy and Lighting	www.ti.com/energy
Clocks and Timers	www.ti.com/clocks	Industrial	www.ti.com/industrial
Interface	interface.ti.com	Medical	www.ti.com/medical
Logic	logic.ti.com	Security	www.ti.com/security
Power Mgmt	power.ti.com	Space, Avionics and Defense	www.ti.com/space-avionics-defense
Microcontrollers	microcontroller.ti.com	Video and Imaging	www.ti.com/video
RFID	www.ti-rfid.com		
OMAP Applications Processors	www.ti.com/omap	**TI E2E Community**	e2e.ti.com
Wireless Connectivity	www.ti.com/wirelessconnectivity		

Mailing Address: Texas Instruments, Post Office Box 655303, Dallas, Texas 75265
Copyright © 2013, Texas Instruments Incorporated