Features

- High Performance, Low Power AVR® 8-Bit Microcontroller
- Advanced RISC Architecture
  - 120 Powerful Instructions – Most Single Clock Cycle Execution
  - 32 x 8 General Purpose Working Registers
  - Fully Static Operation
  - Up to 20 MIPS Throughput at 20 MHz
- Data and Non-volatile Program and Data Memories
  - 2/4K Bytes of In-System Self Programmable Flash
    - Endurance 10,000 Write/Erase Cycles
  - 128/256 Bytes In-System Programmable EEPROM
    - Endurance: 100,000 Write/Erase Cycles
  - 128/256 Bytes Internal SRAM
  - Programming Lock for Flash Program and EEPROM Data Security
- Peripheral Features
  - One 8-bit Timer/Counter with Separate Prescaler and Compare Mode
  - One 16-bit Timer/Counter with Separate Prescaler, Compare and Capture Modes
  - Four PWM Channels
  - On-chip Analog Comparator
  - Programmable Watchdog Timer with On-chip Oscillator
  - USI – Universal Serial Interface
  - Full Duplex USART
- Special Microcontroller Features
  - debugWIRE On-chip Debugging
  - In-System Programmable via SPI Port
  - External and Internal Interrupt Sources
  - Low-power Idle, Power-down, and Standby Modes
  - Enhanced Power-on Reset Circuit
  - Programmable Brown-out Detection Circuit
  - Internal Calibrated Oscillator
- I/O and Packages
  - 18 Programmable I/O Lines
  - 20-pin PDIP, 20-pin SOIC, 20-pad MLF/VQFN
- Operating Voltage
  - 1.8 – 5.5V
- Speed Grades
  - 0 – 4 MHz @ 1.8 – 5.5V
  - 0 – 10 MHz @ 2.7 – 5.5V
  - 0 – 20 MHz @ 4.5 – 5.5V
- Industrial Temperature Range: -40°C to +85°C
- Low Power Consumption
  - Active Mode
    - 190 µA at 1.8V and 1MHz
  - Idle Mode
    - 24 µA at 1.8V and 1MHz
  - Power-down Mode
    - 0.1 µA at 1.8V and +25°C

8-bit AVR® Microcontroller with 2/4K Bytes In-System Programmable Flash

ATtiny2313A
ATtiny4313

Summary

Rev. 8246BS–AVR–09/11

1. Pin Configurations

Figure 1-1. Pinout ATtiny2313A/4313

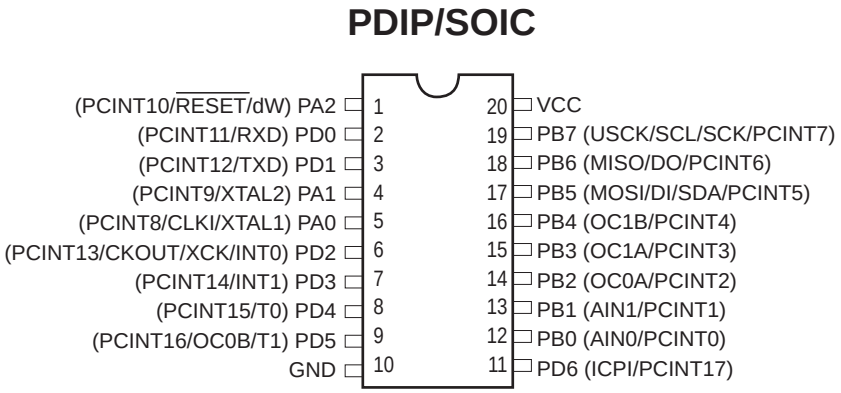

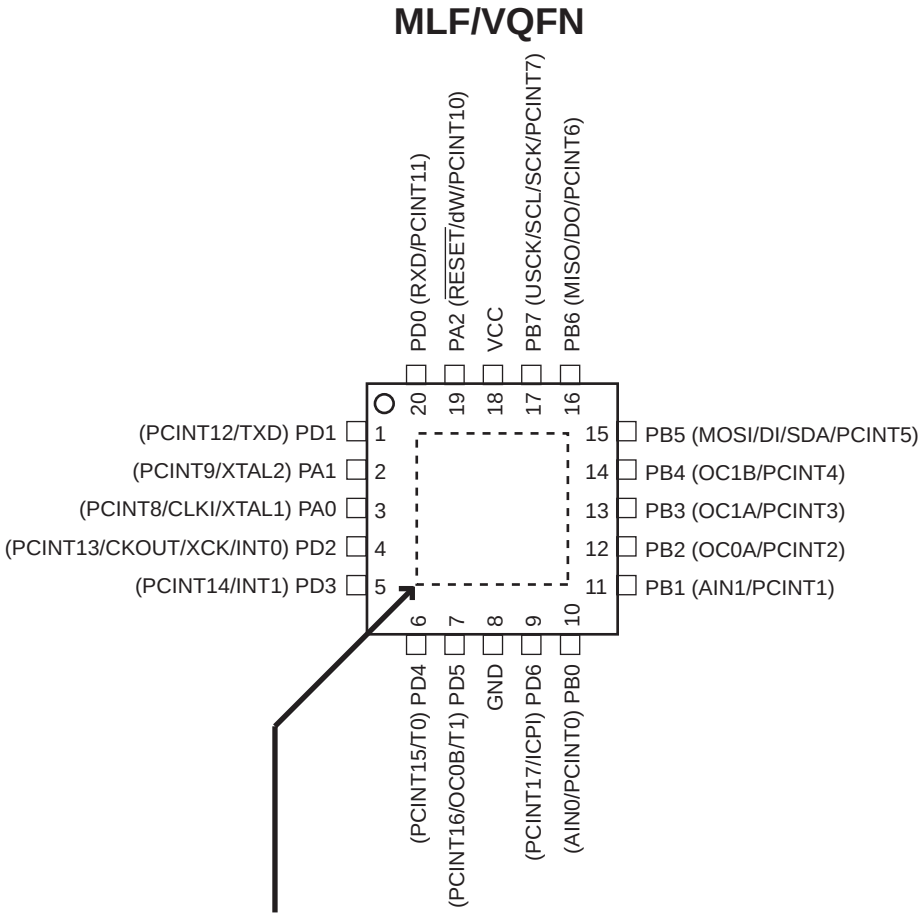

NOTE: Bottom pad should be soldered to ground.

1.1 Pin Descriptions

1.1.1 VCC

Digital supply voltage.

1.1.2 GND

Ground.

1.1.3 Port A (PA2..PA0)

Port A is a 3-bit bi-directional I/O port with internal pull-up resistors (selected for each bit). The Port A output buffers have symmetrical drive characteristics with both high sink and source capability, except PA2 which has the $\overline{\text{RESET}}$ capability. To use pin PA2 as I/O pin, instead of RESET pin, program (“0”) RSTDISBL fuse. As inputs, Port A pins that are externally pulled low will source current if the pull-up resistors are activated. The Port A pins are tri-stated when a reset condition becomes active, even if the clock is not running.

Port A also serves the functions of various special features of the ATtiny2313A/4313 as listed on page 61.

1.1.4 Port B (PB7..PB0)

Port B is an 8-bit bi-directional I/O port with internal pull-up resistors (selected for each bit). The Port B output buffers have symmetrical drive characteristics with both high sink and source capability. As inputs, Port B pins that are externally pulled low will source current if the pull-up resistors are activated. The Port B pins are tri-stated when a reset condition becomes active, even if the clock is not running.

Port B also serves the functions of various special features of the ATtiny2313A/4313 as listed on page 62.

1.1.5 Port D (PD6..PD0)

Port D is a 7-bit bi-directional I/O port with internal pull-up resistors (selected for each bit). The Port D output buffers have symmetrical drive characteristics with both high sink and source capability. As inputs, Port D pins that are externally pulled low will source current if the pull-up resistors are activated. The Port D pins are tri-stated when a reset condition becomes active, even if the clock is not running.

Port D also serves the functions of various special features of the ATtiny2313A/4313 as listed on page 66.

1.1.6 $\overline{\text{RESET}}$

Reset input. A low level on this pin for longer than the minimum pulse length will generate a reset, even if the clock is not running and provided that the reset pin has not been disabled. The minimum pulse length is given in Table 22-3 on page 201. Shorter pulses are not guaranteed to generate a reset. The Reset Input is an alternate function for PA2 and dW.

The reset pin can also be used as a (weak) I/O pin.

1.1.7 XTAL1

Input to the inverting Oscillator amplifier and input to the internal clock operating circuit. XTAL1 is an alternate function for PA0.

1.1.8 XTAL2

Output from the inverting Oscillator amplifier. XTAL2 is an alternate function for PA1.

2. Overview

The ATtiny2313A/4313 is a low-power CMOS 8-bit microcontroller based on the AVR enhanced RISC architecture. By executing powerful instructions in a single clock cycle, the ATtiny2313A/4313 achieves throughputs approaching 1 MIPS per MHz allowing the system designer to optimize power consumption versus processing speed.

2.1 Block Diagram

Figure 2-1. Block Diagram

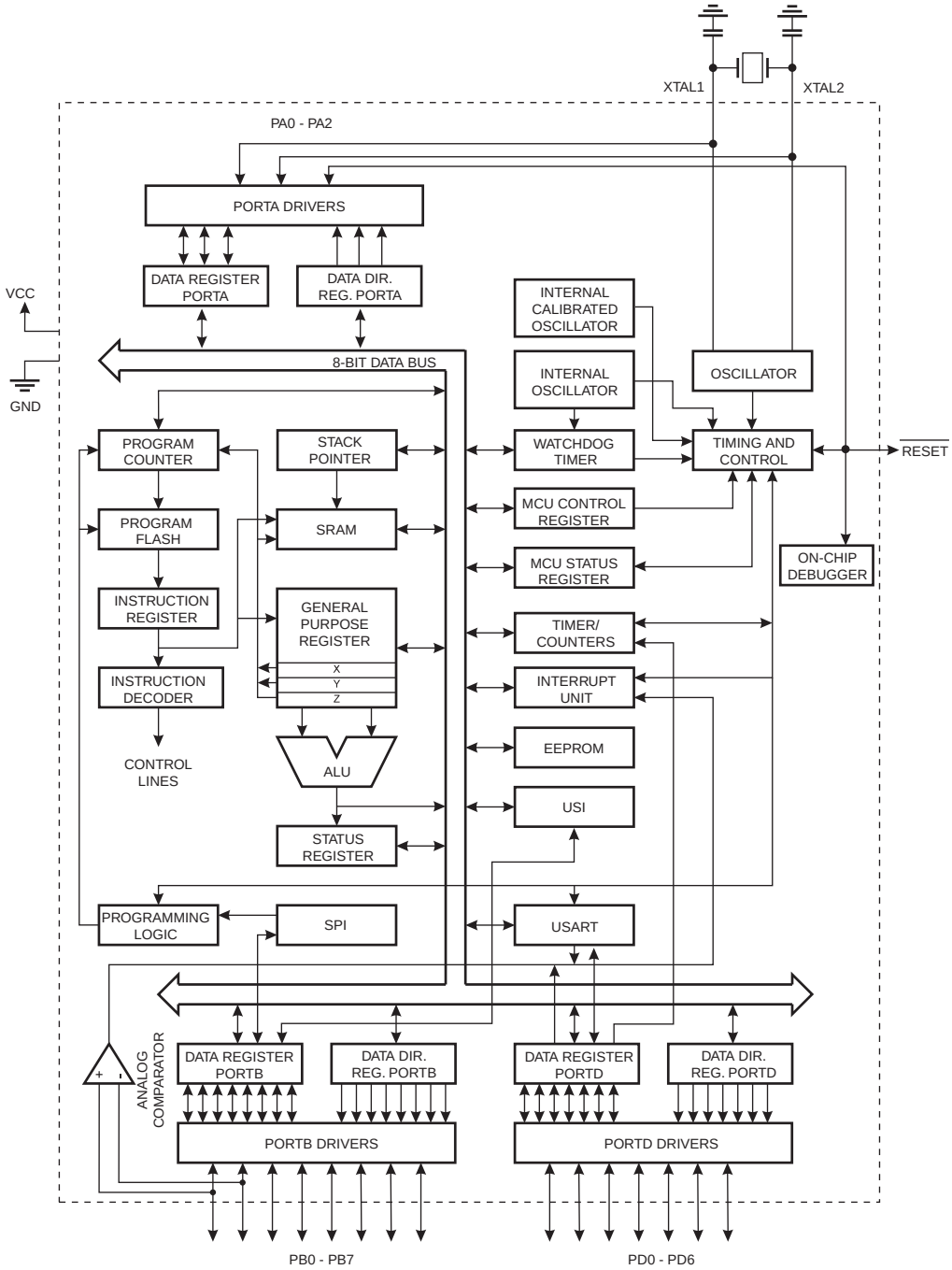

The AVR core combines a rich instruction set with 32 general purpose working registers. All the 32 registers are directly connected to the Arithmetic Logic Unit (ALU), allowing two independent registers to be accessed in one single instruction executed in one clock cycle. The resulting architecture is more code efficient while achieving throughputs up to ten times faster than conventional CISC microcontrollers.

The ATtiny2313A/4313 provides the following features: 2/4K bytes of In-System Programmable Flash, 128/256 bytes EEPROM, 128/256 bytes SRAM, 18 general purpose I/O lines, 32 general purpose working registers, a single-wire Interface for On-chip Debugging, two flexible Timer/Counters with compare modes, internal and external interrupts, a serial programmable USART, Universal Serial Interface with Start Condition Detector, a programmable Watchdog Timer with internal Oscillator, and three software selectable power saving modes. The Idle mode stops the CPU while allowing the SRAM, Timer/Counters, and interrupt system to continue functioning. The Power-down mode saves the register contents but freezes the Oscillator, disabling all other chip functions until the next interrupt or hardware reset. In Standby mode, the crystal/resonator Oscillator is running while the rest of the device is sleeping. This allows very fast start-up combined with low-power consumption.

The device is manufactured using Atmel's high density non-volatile memory technology. The On-chip ISP Flash allows the program memory to be reprogrammed In-System through an SPI serial interface, or by a conventional non-volatile memory programmer. By combining an 8-bit RISC CPU with In-System Self-Programmable Flash on a monolithic chip, the Atmel ATtiny2313A/4313 is a powerful microcontroller that provides a highly flexible and cost effective solution to many embedded control applications.

The ATtiny2313A/4313 AVR is supported with a full suite of program and system development tools including: C Compilers, Macro Assemblers, Program Debugger/Simulators, In-Circuit Emulators, and Evaluation kits.

2.2 Comparison Between ATtiny2313A and ATtiny4313

The ATtiny2313A and ATtiny4313 differ only in memory sizes. Table 2-1 summarizes the different memory sizes for the two devices.

Table 2-1. Memory Size Summary

Device	Flash	EEPROM	RAM
ATtiny2313A	2K Bytes	128 Bytes	128 Bytes
ATtiny4313	4K Bytes	256 Bytes	256 Bytes

3. About

3.1 Resources

A comprehensive set of drivers, application notes, data sheets and descriptions on development tools are available for download at http://www.atmel.com/avr.

3.2 Code Examples

This documentation contains simple code examples that briefly show how to use various parts of the device. These code examples assume that the part specific header file is included before compilation. Be aware that not all C compiler vendors include bit definitions in the header files and interrupt handling in C is compiler dependent. Please confirm with the C compiler documentation for more details.

For I/O Registers located in the extended I/O map, “IN”, “OUT”, “SBIS”, “SBIC”, “CBI”, and “SBI” instructions must be replaced with instructions that allow access to extended I/O. Typically, this means “LDS” and “STS” combined with “SBRS”, “SBRC”, “SBR”, and “CBR”. Note that not all AVR devices include an extended I/O map.

3.3 Data Retention

Reliability Qualification results show that the projected data retention failure rate is much less than 1 PPM over 20 years at 85°C or 100 years at 25°C.

4. Register Summary

Address	Name	Bit 7	Bit 6	Bit 5	Bit 4	Bit 3	Bit 2	Bit 1	Bit 0	Page
0x3F (0x5F)	SREG	I	T	H	S	V	N	Z	C	9
0x3E (0x5E)	Reserved	–	–	–	–	–	–	–	–	
0x3D (0x5D)	SPL	SP7	SP6	SP5	SP4	SP3	SP2	SP1	SP0	12
0x3C (0x5C)	OCR0B	Timer/Counter0 – Compare Register B								85
0x3B (0x5B)	GIMSK	INT1	INT0	PCIE0	PCIE2	PCIE1	–	–	–	50
0x3A (0x5A)	GIFR	INTF1	INTF0	PCIF0	PCIF2	PCIF1	–	–	–	51
0x39 (0x59)	TIMSK	TOIE1	OCIE1A	OCIE1B	–	ICIE1	OCIE0B	TOIE0	OCIE0A	86, 115
0x38 (0x58)	TIFR	TOV1	OCF1A	OCF1B	–	ICF1	OCF0B	TOV0	OCF0A	86, 115
0x37 (0x57)	SPMCSR	–	–	RSIG	CTPB	RFLB	PGWRT	PGERS	SPMEN	175
0x36 (0x56)	OCR0A	Timer/Counter0 – Compare Register A								85
0x35 (0x55)	MCUCR	PUD	SM1	SE	SM0	ISC11	ISC10	ISC01	ISC00	36, 50, 68
0x34 (0x54)	MCUSR	–	–	–	–	WDRF	BORF	EXTRF	PORF	44
0x33 (0x53)	TCCR0B	FOC0A	FOC0B	–	–	WGM02	CS02	CS01	CS00	84
0x32 (0x52)	TCNT0	Timer/Counter0 (8-bit)								85
0x31 (0x51)	OSCCAL	–	CAL6	CAL5	CAL4	CAL3	CAL2	CAL1	CAL0	31
0x30 (0x50)	TCCR0A	COM0A1	COM0A0	COM0B1	COM0B0	–	–	WGM01	WGM00	81
0x2F (0x4F)	TCCR1A	COM1A1	COM1A0	COM1B1	COM1B0	–	–	WGM11	WGM10	110
0x2E (0x4E)	TCCR1B	ICNC1	ICES1	–	WGM13	WGM12	CS12	CS11	CS10	***112***
0x2D (0x4D)	TCNT1H	Timer/Counter1 – Counter Register High Byte								114
0x2C (0x4C)	TCNT1L	Timer/Counter1 – Counter Register Low Byte								114
0x2B (0x4B)	OCR1AH	Timer/Counter1 – Compare Register A High Byte								114
0x2A (0x4A)	OCR1AL	Timer/Counter1 – Compare Register A Low Byte								114
0x29 (0x49)	OCR1BH	Timer/Counter1 – Compare Register B High Byte								114
0x28 (0x48)	OCR1BL	Timer/Counter1 – Compare Register B Low Byte								114
0x27 (0x47)	Reserved	–	–	–	–	–	–	–	–	
0x26 (0x46)	CLKPR	CLKPCE	–	–	–	CLKPS3	CLKPS2	CLKPS1	CLKPS0	31
0x25 (0x45)	ICR1H	Timer/Counter1 - Input Capture Register High Byte								114
0x24 (0x44)	ICR1L	Timer/Counter1 - Input Capture Register Low Byte								114
0x23 (0x43)	GTCCR	–	–	–	–	–	–	–	PSR10	118
0x22 (0x42)	TCCR1C	FOC1A	FOC1B	–	–	–	–	–	–	113
0x21 (0x41)	WDTCSR	WDIF	WDIE	WDP3	WDCE	WDE	WDP2	WDP1	WDP0	44
0x20 (0x40)	PCMSK0	PCINT7	PCINT6	PCINT5	PCINT4	PCINT3	PCINT2	PCINT1	PCINT0	53
0x1F (0x3F)	Reserved	–	–	–	–	–	–	–	–	
0x1E (0x3E)	EEAR	–	EEPROM Address Register							23
0x1D (0x3D)	EEDR	EEPROM Data Register								23
0x1C (0x3C)	EECR	–	–	EEPM1	EEPM0	EERIE	EEMPE	EEPE	EERE	23
0x1B (0x3B)	PORTA	–	–	–	–	–	PORTA2	PORTA1	PORTA0	68
0x1A (0x3A)	DDRA	–	–	–	–	–	DDA2	DDA1	DDA0	68
0x19 (0x39)	PINA	–	–	–	–	–	PINA2	PINA1	PINA0	69
0x18 (0x38)	PORTB	PORTB7	PORTB6	PORTB5	PORTB4	PORTB3	PORTB2	PORTB1	PORTB0	69
0x17 (0x37)	DDRB	DDB7	DDB6	DDB5	DDB4	DDB3	DDB2	DDB1	DDB0	69
0x16 (0x36)	PINB	PINB7	PINB6	PINB5	PINB4	PINB3	PINB2	PINB1	PINB0	69
0x15 (0x35)	GPIOR2	General Purpose I/O Register 2								24
0x14 (0x34)	GPIOR1	General Purpose I/O Register 1								24
0x13 (0x33)	GPIOR0	General Purpose I/O Register 0								24
0x12 (0x32)	PORTD	–	PORTD6	PORTD5	PORTD4	PORTD3	PORTD2	PORTD1	PORTD0	69
0x11 (0x31)	DDRD	–	DDD6	DDD5	DDD4	DDD3	DDD2	DDD1	DDD0	69
0x10 (0x30)	PIND	–	PIND6	PIND5	PIND4	PIND3	PIND2	PIND1	PIND0	69
0x0F (0x2F)	USIDR	USI Data Register								165
0x0E (0x2E)	USISR	USISIF	USIOIF	USIPF	USIDC	USICNT3	USICNT2	USICNT1	USICNT0	164
0x0D (0x2D)	USICR	USISIE	USIOIE	USIWM1	USIWM0	USICS1	USICS0	USICLK	USITC	162
0x0C (0x2C)	UDR	UART Data Register (8-bit)								136
0x0B (0x2B)	UCSRA	RXC	TXC	UDRE	FE	DOR	UPE	U2X	MPCM	137
0x0A (0x2A)	UCSRB	RXCIE	TXCIE	UDRIE	RXEN	TXEN	UCSZ2	RXB8	TXB8	138
0x09 (0x29)	UBRRL	UBRRH[7:0]								140
0x08 (0x28)	ACSR	ACD	ACBG	ACO	ACI	ACIE	ACIC	ACIS1	ACIS0	167
0x07 (0x27)	BODCR	–	–	–	–	–	–	BODS	BODSE	37
0x06 (0x26)	PRR	–	–	–	–	PRTIM1	PRTIM0	PRUSI	PRUSART	36
0x05 (0x25)	PCMSK2	–	PCINT17	PCINT16	PCINT15	PCINT14	PCINT13	PCINT12	PCINT11	52
0x04 (0x24)	PCMSK1	–	–	–	–	–	PCINT10	PCINT9	PCINT8	52
0x03 (0x23)	UCSRC	UMSEL1	UMSEL0	UPM1	UPM0	USBS	UCSZ1	UCSZ0	UCPOL	139
0x02 (0x22)	UBRRH	–	–	–	–	UBRRH[11:8]				140
0x01 (0x21)	DIDR	–	–	–	–	–	–	AIN1D	AIN0D	168
0x00 (0x20)	USIBR	USI Buffer Register								166

Notes:
1. For compatibility with future devices, reserved bits should be written to zero if accessed. Reserved I/O memory addresses should never be written.
2. I/O Registers within the address range 0x00 - 0x1F are directly bit-accessible using the SBI and CBI instructions. In these registers, the value of single bits can be checked by using the SBIS and SBIC instructions.
3. Some of the status flags are cleared by writing a logical one to them. Note that, unlike most other AVRs, the CBI and SBI instructions will only operate on the specified bit, and can therefore be used on registers containing such status flags. The CBI and SBI instructions work with registers 0x00 to 0x1F only.
4. When using the I/O specific commands IN and OUT, the I/O addresses 0x00 - 0x3F must be used. When addressing I/O Registers as data space using LD and ST instructions, 0x20 must be added to these addresses.

5. Instruction Set Summary

Mnemonics	Operands	Description	Operation	Flags	#Clocks
ARITHMETIC AND LOGIC INSTRUCTIONS					
ADD	Rd, Rr	Add two Registers	Rd ← Rd + Rr	Z,C,N,V,H	1
ADC	Rd, Rr	Add with Carry two Registers	Rd ← Rd + Rr + C	Z,C,N,V,H	1
ADIW	Rdl,K	Add Immediate to Word	Rdh:Rdl ← Rdh:Rdl + K	Z,C,N,V,S	2
SUB	Rd, Rr	Subtract two Registers	Rd ← Rd - Rr	Z,C,N,V,H	1
SUBI	Rd, K	Subtract Constant from Register	Rd ← Rd - K	Z,C,N,V,H	1
SBC	Rd, Rr	Subtract with Carry two Registers	Rd ← Rd - Rr - C	Z,C,N,V,H	1
SBCI	Rd, K	Subtract with Carry Constant from Reg.	Rd ← Rd - K - C	Z,C,N,V,H	1
SBIW	Rdl,K	Subtract Immediate from Word	Rdh:Rdl ← Rdh:Rdl - K	Z,C,N,V,S	2
AND	Rd, Rr	Logical AND Registers	Rd ← Rd • Rr	Z,N,V	1
ANDI	Rd, K	Logical AND Register and Constant	Rd ← Rd • K	Z,N,V	1
OR	Rd, Rr	Logical OR Registers	Rd ← Rd v Rr	Z,N,V	1
ORI	Rd, K	Logical OR Register and Constant	Rd ← Rd v K	Z,N,V	1
EOR	Rd, Rr	Exclusive OR Registers	Rd ← Rd ⊕ Rr	Z,N,V	1
COM	Rd	One's Complement	Rd ← 0xFF − Rd	Z,C,N,V	1
NEG	Rd	Two's Complement	Rd ← 0x00 − Rd	Z,C,N,V,H	1
SBR	Rd,K	Set Bit(s) in Register	Rd ← Rd v K	Z,N,V	1
CBR	Rd,K	Clear Bit(s) in Register	Rd ← Rd • (0xFF - K)	Z,N,V	1
INC	Rd	Increment	Rd ← Rd + 1	Z,N,V	1
DEC	Rd	Decrement	Rd ← Rd − 1	Z,N,V	1
TST	Rd	Test for Zero or Minus	Rd ← Rd • Rd	Z,N,V	1
CLR	Rd	Clear Register	Rd ← Rd ⊕ Rd	Z,N,V	1
SER	Rd	Set Register	Rd ← 0xFF	None	1
BRANCH INSTRUCTIONS					
RJMP	k	Relative Jump	PC ← PC + k + 1	None	2
IJMP		Indirect Jump to (Z)	PC ← Z	None	2
RCALL	k	Relative Subroutine Call	PC ← PC + k + 1	None	3
ICALL		Indirect Call to (Z)	PC ← Z	None	3
RET		Subroutine Return	PC ← STACK	None	4
RETI		Interrupt Return	PC ← STACK	I	4
CPSE	Rd,Rr	Compare, Skip if Equal	if (Rd = Rr) PC ← PC + 2 or 3	None	1/2/3
CP	Rd,Rr	Compare	Rd − Rr	Z, N,V,C,H	1
CPC	Rd,Rr	Compare with Carry	Rd − Rr − C	Z, N,V,C,H	1
CPI	Rd,K	Compare Register with Immediate	Rd − K	Z, N,V,C,H	1
SBRC	Rr, b	Skip if Bit in Register Cleared	if (Rr(b)=0) PC ← PC + 2 or 3	None	1/2/3
SBRS	Rr, b	Skip if Bit in Register is Set	if (Rr(b)=1) PC ← PC + 2 or 3	None	1/2/3
SBIC	P, b	Skip if Bit in I/O Register Cleared	if (P(b)=0) PC ← PC + 2 or 3	None	1/2/3
SBIS	P, b	Skip if Bit in I/O Register is Set	if (P(b)=1) PC ← PC + 2 or 3	None	1/2/3
BRBS	s, k	Branch if Status Flag Set	if (SREG(s) = 1) then PC←PC+k + 1	None	1/2
BRBC	s, k	Branch if Status Flag Cleared	if (SREG(s) = 0) then PC←PC+k + 1	None	1/2
BREQ	k	Branch if Equal	if (Z = 1) then PC ← PC + k + 1	None	1/2
BRNE	k	Branch if Not Equal	if (Z = 0) then PC ← PC + k + 1	None	1/2
BRCS	k	Branch if Carry Set	if (C = 1) then PC ← PC + k + 1	None	1/2
BRCC	k	Branch if Carry Cleared	if (C = 0) then PC ← PC + k + 1	None	1/2
BRSH	k	Branch if Same or Higher	if (C = 0) then PC ← PC + k + 1	None	1/2
BRLO	k	Branch if Lower	if (C = 1) then PC ← PC + k + 1	None	1/2
BRMI	k	Branch if Minus	if (N = 1) then PC ← PC + k + 1	None	1/2
BRPL	k	Branch if Plus	if (N = 0) then PC ← PC + k + 1	None	1/2
BRGE	k	Branch if Greater or Equal, Signed	if (N ⊕ V= 0) then PC ← PC + k + 1	None	1/2
BRLT	k	Branch if Less Than Zero, Signed	if (N ⊕ V= 1) then PC ← PC + k + 1	None	1/2
BRHS	k	Branch if Half Carry Flag Set	if (H = 1) then PC ← PC + k + 1	None	1/2
BRHC	k	Branch if Half Carry Flag Cleared	if (H = 0) then PC ← PC + k + 1	None	1/2
BRTS	k	Branch if T Flag Set	if (T = 1) then PC ← PC + k + 1	None	1/2
BRTC	k	Branch if T Flag Cleared	if (T = 0) then PC ← PC + k + 1	None	1/2
BRVS	k	Branch if Overflow Flag is Set	if (V = 1) then PC ← PC + k + 1	None	1/2
BRVC	k	Branch if Overflow Flag is Cleared	if (V = 0) then PC ← PC + k + 1	None	1/2
BRIE	k	Branch if Interrupt Enabled	if (I = 1) then PC ← PC + k + 1	None	1/2
BRID	k	Branch if Interrupt Disabled	if (I = 0) then PC ← PC + k + 1	None	1/2
BIT AND BIT-TEST INSTRUCTIONS					
SBI	P,b	Set Bit in I/O Register	I/O(P,b) ← 1	None	2
CBI	P,b	Clear Bit in I/O Register	I/O(P,b) ← 0	None	2
LSL	Rd	Logical Shift Left	Rd(n+1) ← Rd(n), Rd(0) ← 0	Z,C,N,V	1
LSR	Rd	Logical Shift Right	Rd(n) ← Rd(n+1), Rd(7) ← 0	Z,C,N,V	1
ROL	Rd	Rotate Left Through Carry	Rd(0)←C,Rd(n+1)← Rd(n),C←Rd(7)	Z,C,N,V	1

Mnemonics	Operands	Description	Operation	Flags	#Clocks
ROR	Rd	Rotate Right Through Carry	Rd(7)←C,Rd(n)← Rd(n+1),C←Rd(0)	Z,C,N,V	1
ASR	Rd	Arithmetic Shift Right	Rd(n) ← Rd(n+1), n=0..6	Z,C,N,V	1
SWAP	Rd	Swap Nibbles	Rd(3..0)←Rd(7..4),Rd(7..4)←Rd(3..0)	None	1
BSET	s	Flag Set	SREG(s) ← 1	SREG(s)	1
BCLR	s	Flag Clear	SREG(s) ← 0	SREG(s)	1
BST	Rr, b	Bit Store from Register to T	T ← Rr(b)	T	1
BLD	Rd, b	Bit load from T to Register	Rd(b) ← T	None	1
SEC		Set Carry	C ← 1	C	1
CLC		Clear Carry	C ← 0	C	1
SEN		Set Negative Flag	N ← 1	N	1
CLN		Clear Negative Flag	N ← 0	N	1
SEZ		Set Zero Flag	Z ← 1	Z	1
CLZ		Clear Zero Flag	Z ← 0	Z	1
SEI		Global Interrupt Enable	I ← 1	I	1
CLI		Global Interrupt Disable	I ← 0	I	1
SES		Set Signed Test Flag	S ← 1	S	1
CLS		Clear Signed Test Flag	S ← 0	S	1
SEV		Set Twos Complement Overflow.	V ← 1	V	1
CLV		Clear Twos Complement Overflow	V ← 0	V	1
SET		Set T in SREG	T ← 1	T	1
CLT		Clear T in SREG	T ← 0	T	1
SEH		Set Half Carry Flag in SREG	H ← 1	H	1
CLH		Clear Half Carry Flag in SREG	H ← 0	H	1
DATA TRANSFER INSTRUCTIONS					
MOV	Rd, Rr	Move Between Registers	Rd ← Rr	None	1
MOVW	Rd, Rr	Copy Register Word	Rd+1:Rd ← Rr+1:Rr	None	1
LDI	Rd, K	Load Immediate	Rd ← K	None	1
LD	Rd, X	Load Indirect	Rd ← (X)	None	2
LD	Rd, X+	Load Indirect and Post-Inc.	Rd ← (X), X ← X + 1	None	2
LD	Rd, - X	Load Indirect and Pre-Dec.	X ← X - 1, Rd ← (X)	None	2
LD	Rd, Y	Load Indirect	Rd ← (Y)	None	2
LD	Rd, Y+	Load Indirect and Post-Inc.	Rd ← (Y), Y ← Y + 1	None	2
LD	Rd, - Y	Load Indirect and Pre-Dec.	Y ← Y - 1, Rd ← (Y)	None	2
LDD	Rd,Y+q	Load Indirect with Displacement	Rd ← (Y + q)	None	2
LD	Rd, Z	Load Indirect	Rd ← (Z)	None	2
LD	Rd, Z+	Load Indirect and Post-Inc.	Rd ← (Z), Z ← Z+1	None	2
LD	Rd, -Z	Load Indirect and Pre-Dec.	Z ← Z - 1, Rd ← (Z)	None	2
LDD	Rd, Z+q	Load Indirect with Displacement	Rd ← (Z + q)	None	2
LDS	Rd, k	Load Direct from SRAM	Rd ← (k)	None	2
ST	X, Rr	Store Indirect	(X) ← Rr	None	2
ST	X+, Rr	Store Indirect and Post-Inc.	(X) ← Rr, X ← X + 1	None	2
ST	- X, Rr	Store Indirect and Pre-Dec.	X ← X - 1, (X) ← Rr	None	2
ST	Y, Rr	Store Indirect	(Y) ← Rr	None	2
ST	Y+, Rr	Store Indirect and Post-Inc.	(Y) ← Rr, Y ← Y + 1	None	2
ST	- Y, Rr	Store Indirect and Pre-Dec.	Y ← Y - 1, (Y) ← Rr	None	2
STD	Y+q,Rr	Store Indirect with Displacement	(Y + q) ← Rr	None	2
ST	Z, Rr	Store Indirect	(Z) ← Rr	None	2
ST	Z+, Rr	Store Indirect and Post-Inc.	(Z) ← Rr, Z ← Z + 1	None	2
ST	-Z, Rr	Store Indirect and Pre-Dec.	Z ← Z - 1, (Z) ← Rr	None	2
STD	Z+q,Rr	Store Indirect with Displacement	(Z + q) ← Rr	None	2
STS	k, Rr	Store Direct to SRAM	(k) ← Rr	None	2
LPM		Load Program Memory	R0 ← (Z)	None	3
LPM	Rd, Z	Load Program Memory	Rd ← (Z)	None	3
LPM	Rd, Z+	Load Program Memory and Post-Inc	Rd ← (Z), Z ← Z+1	None	3
SPM		Store Program Memory	(Z) ← R1:R0	None	-
IN	Rd, P	In Port	Rd ← P	None	1
OUT	P, Rr	Out Port	P ← Rr	None	1
PUSH	Rr	Push Register on Stack	STACK ← Rr	None	2
POP	Rd	Pop Register from Stack	Rd ← STACK	None	2
MCU CONTROL INSTRUCTIONS					
NOP		No Operation		None	1
SLEEP		Sleep	(see specific descr. for Sleep function)	None	1
WDR		Watchdog Reset	(see specific descr. for WDR/timer)	None	1
BREAK		Break	For On-chip Debug Only	None	N/A

6. Ordering Information

6.1 ATtiny2313A

Speed (MHz) [1]	Supply Voltage (V)	Temperature Range	Package [2]	Ordering Code [3]
20	1.8 – 5.5	Industrial (-40°C to +85°C) [4]	20P3	ATtiny2313A-PU
			20S	ATtiny2313A-SU
				ATtiny2313A-SUR
			20M1	ATtiny2313A-MU
				ATtiny2313A-MUR
			20M2 [5][6]	ATtiny2313A-MMH
				ATtiny2313A-MMHR

Notes:
1. For speed vs. supply voltage, see section 22.3 “Speed” on page 199.
2. All packages are Pb-free, halide-free and fully green, and they comply with the European directive for Restriction of Hazardous Substances (RoHS).
3. Code indicators:
   - H: NiPdAu lead finish
   - U or N: matte tin
   - R: tape & reel
4. Can also be supplied in wafer form. Contact your local Atmel sales office for ordering information and minimum quantities.
5. NiPdAu finish
6. Topside markings :
   - 1st Line: T2313
   - 2nd Line: Axx
   - 3rd Line: xxx

Package Type	
20P3	20-lead, 0.300" Wide, Plastic Dual Inline Package (PDIP)
20S	20-lead, 0.300" Wide, Plastic Gull Wing Small Outline Package (SOIC)
20M1	20-pad, 4 x 4 x 0.8 mm Body, Quad Flat No-Lead / Micro Lead Frame Package (MLF)
20M2	20-pad, 3 x 3 x 0.85 mm Body, Very Thin Quad Flat No Lead Package (VQFN)

6.2 ATtiny4313

Speed (MHz) [1]	Supply Voltage (V)	Temperature Range	Package [2]	Ordering Code [3]
20	1.8 – 5.5	Industrial (-40°C to +85°C) [4]	20P3	ATtiny4313-PU
			20S	ATtiny4313-SU
				ATtiny4313-SUR
			20M1	ATtiny4313-MU
				ATtiny4313-MUR
			20M2 [5][6]	ATtiny4313-MMH
				ATtiny4313-MMHR

Notes:
1. For speed vs. supply voltage, see section 22.3 “Speed” on page 199.
2. All packages are Pb-free, halide-free and fully green, and they comply with the European directive for Restriction of Hazardous Substances (RoHS).
3. Code indicators:
   - H: NiPdAu lead finish
   - U or N: matte tin
   - R: tape & reel
4. Can also be supplied in wafer form. Contact your local Atmel sales office for ordering information and minimum quantities.
5. NiPdAu finish
6. Topside markings:
   - 1st Line: T4313
   - 2nd Line: Axx
   - 3rd Line: xxx

Package Type	
20P3	20-lead, 0.300" Wide, Plastic Dual Inline Package (PDIP)
20S	20-lead, 0.300" Wide, Plastic Gull Wing Small Outline Package (SOIC)
20M1	20-pad, 4 x 4 x 0.8 mm Body, Quad Flat No-Lead/Micro Lead Frame Package (MLF)
20M2	20-pad, 3 x 3 x 0.85 mm Body, Very Thin Quad Flat No Lead Package (VQFN)

7. Packaging Information

7.1 20P3

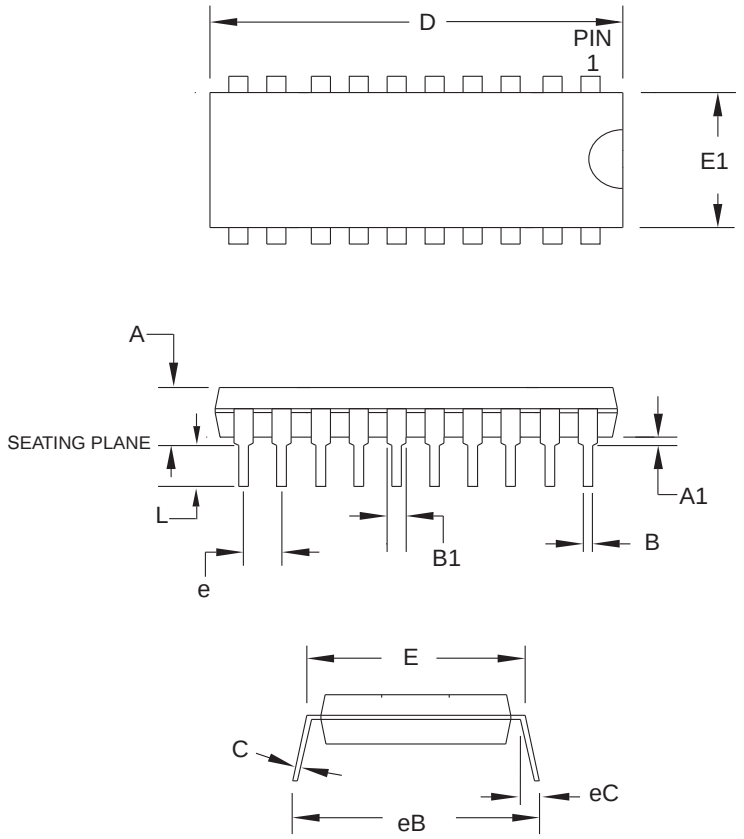

COMMON DIMENSIONS
(Unit of Measure = mm)

SYMBOL	MIN	NOM	MAX	NOTE
A	–	–	5.334	
A1	0.381	–	–	
D	25.493	–	25.984	Note 2
E	7.620	–	8.255	
E1	6.096	–	7.112	Note 2
B	0.356	–	0.559	
B1	1.270	–	1.551	
L	2.921	–	3.810	
C	0.203	–	0.356	
eB	–	–	10.922	
eC	0.000	–	1.524	
e	2.540 TYP			

Notes:
1. This package conforms to JEDEC reference MS-001, Variation AD.
2. Dimensions D and E1 do not include mold Flash or Protrusion.
   Mold Flash or Protrusion shall not exceed 0.25 mm (0.010").

2010-10-19

	TITLE	DRAWING NO.	REV.
2325 Orchard Parkway San Jose, CA 95131	**20P3**, 20-lead (0.300"/7.62 mm Wide) Plastic Dual Inline Package (PDIP)	20P3	D

7.2 20S

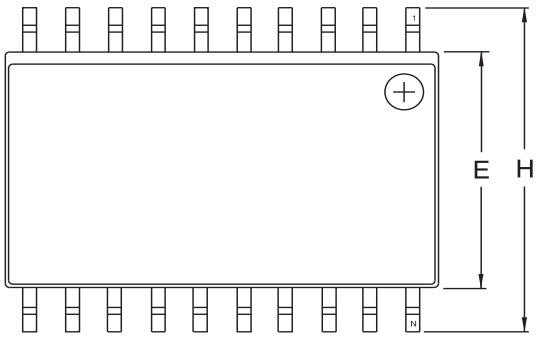

Top View

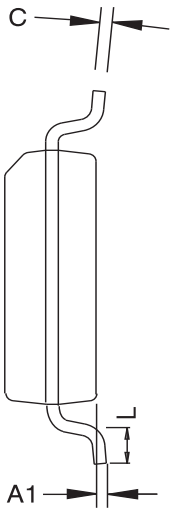

End View

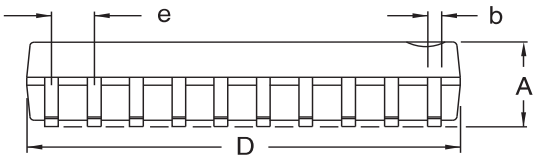

Side View

COMMON DIMENSIONS
(Unit of Measure – mm)

SYMBOL	MIN	NOM	MAX	NOTE
A	2.35		2.65	
A1	0.10		0.30	
b	0.33		0.51	4
C	0.23		0.32	
D	12.60		13.00	1
E	7.40		7.60	2
H	10.00		10.65	
L	0.40		1.27	3
e	1.27 BSC			

Notes.
1. This drawing is for general information only; refer to JEDEC Drawing MS-013, Variation AC for additional information.
2. Dimension 'D' does not include mold Flash, protrusions or gate burrs. Mold Flash, protrusions and gate burrs shall not exceed 0.15 mm (0.006') per side.
3. Dimension 'E' does not include inter-lead Flash or protrusion. Inter-lead Flash and protrusions shall not exceed 0.25 mm (0.010') per side.
4. 'L' is the length of the terminal for soldering to a substrate.
5. The lead width 'b', as measured 0.36 mm (0.014') or greater above the seating plane, shall not exceed a maximum value of 0.61 mm (0.024') per side.

11/6/06

2325 Orchard Parkway San Jose, CA 95131	**TITLE** **20S2**, 20-lead, 0.300' Wide Body, Plastic Gull Wing Small Outline Package (SOIC)	**DRAWING NO.** 20S2	**REV.** B

7.3 20M1

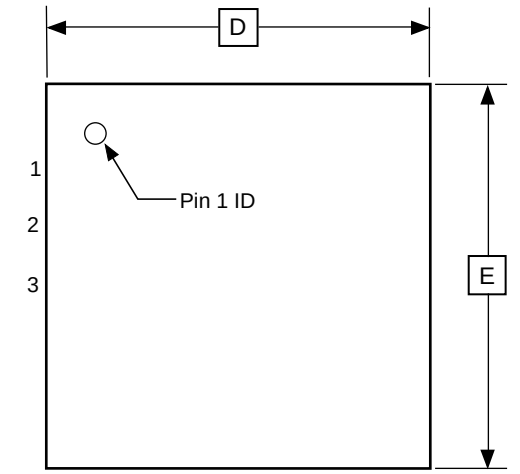

TOP VIEW

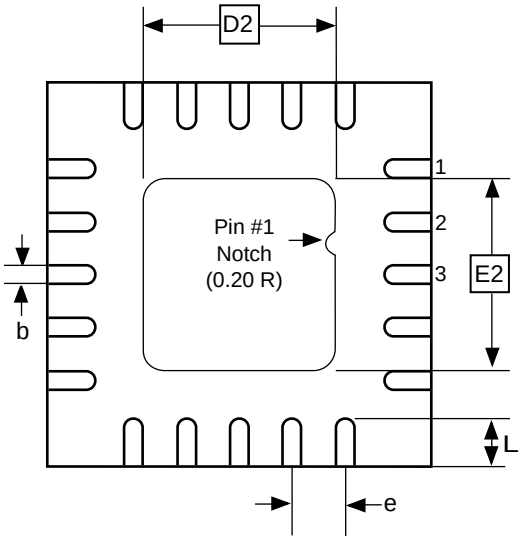

BOTTOM VIEW

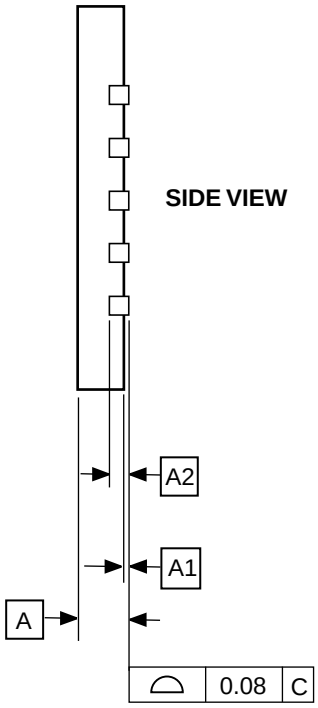

SIDE VIEW

COMMON DIMENSIONS
(Unit of Measure = mm)

SYMBOL	MIN	NOM	MAX	NOTE
A	0.70	0.75	0.80	
A1	–	0.01	0.05	
A2		0.20 REF		
b	0.18	0.23	0.30	
D		4.00 BSC		
D2	2.45	2.60	2.75	
E		4.00 BSC		
E2	2.45	2.60	2.75	
e		0.50 BSC		
L	0.35	0.40	0.55	

Note: Reference JEDEC Standard MO-220, Fig. 1 (SAW Singulation) WGGD-5.

10/27/04

2325 Orchard Parkway San Jose, CA 95131	**TITLE** **20M1**, 20-pad, 4 x 4 x 0.8 mm Body, Lead Pitch 0.50 mm, 2.6 mm Exposed Pad, Micro Lead Frame Package (MLF)	**DRAWING NO.** 20M1	**REV.** A

7.4 20M2

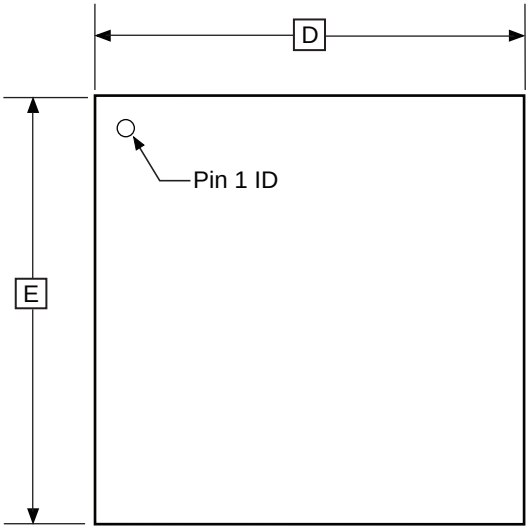

TOP VIEW

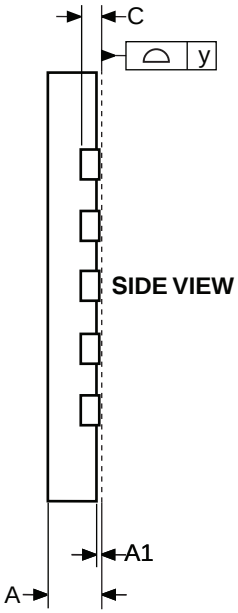

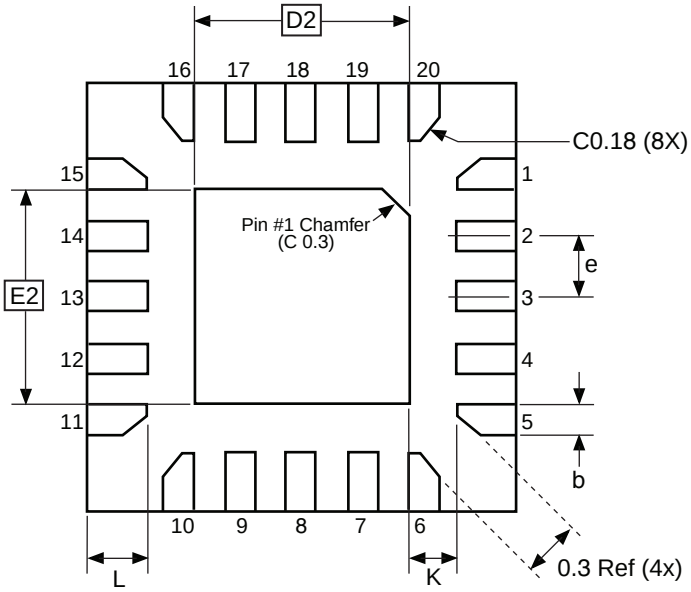

BOTTOM VIEW

COMMON DIMENSIONS
(Unit of Measure = mm)

SYMBOL	MIN	NOM	MAX	NOTE
A	0.75	0.80	0.85	
A1	0.00	0.02	0.05	
b	0.17	0.22	0.27	
C		0.152		
D	2.90	3.00	3.10	
D2	1.40	1.55	1.70	
E	2.90	3.00	3.10	
E2	1.40	1.55	1.70	
e	–	0.45	–	
L	0.35	0.40	0.45	
K	0.20	–	–	
y	0.00	–	0.08	

10/24/08

	TITLE	GPC	DRAWING NO.	REV.
Package Drawing Contact: packagedrawings@atmel.com	**20M2,** 20-pad, 3 x 3 x 0.85 mm Body, Lead Pitch 0.45 mm, 1.55 x 1.55 mm Exposed Pad, Thermally Enhanced Plastic Very Thin Quad Flat No Lead Package (VQFN)	ZFC	20M2	B

8. Errata

The revision letters in this section refer to the revision of the corresponding ATtiny2313A/4313 device.

8.1 ATtiny2313A

8.1.1 Rev. D

No known errata.

8.1.2 Rev. A – C

These device revisions were referred to as ATtiny2313/ATtiny2313V.

8.2 ATtiny4313

8.2.1 Rev. A

No known errata.

9. Datasheet Revision History

9.1 Rev. 8246B – 10/11

1. Updated device status from Preliminary to Final.
2. Updated document template.
3. Added order codes for tape&reel devices, on page 259 and page 260
4. Updated figures:
   – Figure 23-33 on page 223
   – Figure 23-44 on page 228
   – Figure 23-81 on page 247
   – Figure 23-92 on page 252
5. Updated sections:
   – Section 5. “Memories” on page 15
   – Section 19. “Self-Programming” on page 172
   – Section 20. “Lock Bits, Fuse Bits and Device Signature” on page 177
   – Section 21. “External Programming” on page 183
   – Section 26. “Ordering Information” on page 259

9.2 Rev. 8246A – 11/09

1. Initial revision. Created from document 2543_t2313.
2. Updated datasheet template.
3. Added VQFN in the Pinout Figure 1-1 on page 2.
4. Added Section 7.2 “Software BOD Disable” on page 34.
5. Added Section 7.3 “Power Reduction Register” on page 34.
6. Updated Table 7-2, “Sleep Mode Select,” on page 36.
7. Added Section 7.5.3 “BODCR – Brown-Out Detector Control Register” on page 37.
8. Added reset disable function in Figure 8-1 on page 38.
9. Added pin change interrupts PCINT1 and PCINT2 in Table 9-1 on page 47.
10. Added PCINT17..8 and PCMSK2..1 in Section 9.2 “External Interrupts” on page 48.
11. Added Section 9.3.4 “PCMSK2 – Pin Change Mask Register 2” on page 52.
12. Added Section 9.3.5 “PCMSK1 – Pin Change Mask Register 1” on page 52.
13. Updated Section 10.2.1 “Alternate Functions of Port A” on page 61.
14. Updated Section 10.2.2 “Alternate Functions of Port B” on page 62.
15. Updated Section 10.2.3 “Alternate Functions of Port D” on page 66.
16. Added UMSEL1 and UMSEL0 in Section 14.10.4 “UCSRC – USART Control and Status Register C” on page 139.
17. Added Section 15. “USART in SPI Mode” on page 145.
18. Added USI Buffer Register (USIBR) in Section 16.2 “Overview” on page 155 and in Figure 16-1 on page 155.
19. Added Section 16.5.4 “USIBR – USI Buffer Register” on page 166.
20. Updated Section 19.6.3 “Reading Device Signature Imprint Table from Firmware” on page 175.

21. Updated Section 19.7.1 “SPMCSR – Store Program Memory Control and Status Register” on page 175.
22. Added Section 20.3 “Device Signature Imprint Table” on page 179.
23. Updated Section 20.3.1 “Calibration Byte” on page 180.
24. Changed BS to BS1 in Section 20.6.13 “Reading the Signature Bytes” on page 189.
25. Updated Section 22.2 “DC Characteristics” on page 198.
26. Added Section 23.1 “Effect of Power Reduction” on page 206.
27. Updated characteristic plots in Section 23. “Typical Characteristics” for ATtiny2313A (pages 207 - 230), and added plots for ATtiny4313 (pages 231 - 254).
28. Updated Section 24. “Register Summary” on page 255 .
29. Updated Section 26. “Ordering Information” on page 259, added the package type 20M2 and the ordering code -MMH (VQFN), and added the topside marking note.

Headquarters

Atmel Corporation
2325 Orchard Parkway
San Jose, CA 95131
USA
Tel: 1(408) 441-0311
Fax: 1(408) 487-2600

International

Atmel Asia Limited
Unit 01-5 & 16, 19/F
BEA Tower, Millennium City 5
418 Kwun Tong Road
Kwun Tong, Kowloon
HONG KONG
Tel: (852) 2245-6100
Fax: (852) 2722-1369

Atmel Munich GmbH
Business Campus
Parkring 4
D-85748 Garching b. Munich
GERMANY
Tel: (+49) 89-31970-0
Fax: (+49) 89-3194621

Atmel Japan
9F, Tonetsu Shinkawa Bldg.
1-24-8 Shinkawa
Chuo-ku, Tokyo 104-0033
JAPAN
Tel: (81) 3-3523-3551
Fax: (81) 3-3523-7581

Product Contact

Web Site
www.atmel.com

Technical Support
avr@atmel.com

Sales Contact
www.atmel.com/contacts

Literature Requests
www.atmel.com/literature

Disclaimer: The information in this document is provided in connection with Atmel products. No license, express or implied, by estoppel or otherwise, to any intellectual property right is granted by this document or in connection with the sale of Atmel products. **EXCEPT AS SET FORTH IN ATMEL'S TERMS AND CONDITIONS OF SALE LOCATED ON ATMEL'S WEB SITE, ATMEL ASSUMES NO LIABILITY WHATSOEVER AND DISCLAIMS ANY EXPRESS, IMPLIED OR STATUTORY WARRANTY RELATING TO ITS PRODUCTS INCLUDING, BUT NOT LIMITED TO, THE IMPLIED WARRANTY OF MERCHANTABILITY, FITNESS FOR A PARTICULAR PURPOSE, OR NON-INFRINGEMENT. IN NO EVENT SHALL ATMEL BE LIABLE FOR ANY DIRECT, INDIRECT, CONSEQUENTIAL, PUNITIVE, SPECIAL OR INCIDENTAL DAMAGES (INCLUDING, WITHOUT LIMITATION, DAMAGES FOR LOSS OF PROFITS, BUSINESS INTERRUPTION, OR LOSS OF INFORMATION) ARISING OUT OF THE USE OR INABILITY TO USE THIS DOCUMENT, EVEN IF ATMEL HAS BEEN ADVISED OF THE POSSIBILITY OF SUCH DAMAGES.** Atmel makes no representations or warranties with respect to the accuracy or completeness of the contents of this document and reserves the right to make changes to specifications and product descriptions at any time without notice. Atmel does not make any commitment to update the information contained herein. Unless specifically provided otherwise, Atmel products are not suitable for, and shall not be used in, automotive applications. Atmel's products are not intended, authorized, or warranted for use as components in applications intended to support or sustain life.

© 2011 Atmel Corporation. All rights reserved. Atmel®, logo and combinations thereof, AVR® and others are registered trademarks or trademarks of Atmel Corporation or its subsidiaries. Other terms and product names may be trademarks of others.

8246BS–AVR–09/11