Features

- High-performance, Low-power AVR® 8-bit Microcontroller
- Advanced RISC Architecture
  - 131 Powerful Instructions – Most Single-clock Cycle Execution
  - 32 x 8 General Purpose Working Registers
  - Fully Static Operation
  - Up to 16 MIPS Throughput at 16 MHz
  - On-chip 2-cycle Multiplier
- High Endurance Non-volatile Memory segments
  - 16K Bytes of In-System Self-programmable Flash program memory
  - 512 Bytes EEPROM
  - 1K Bytes Internal SRAM
  - Write/Erase cycles: 10,000 Flash/100,000 EEPROM
  - Data retention: 20 years at 85°C/100 years at 25°C[1]
  - Optional Boot Code Section with Independent Lock Bits
    In-System Programming by On-chip Boot Program
    True Read-While-Write Operation
  - Up to 64K Bytes Optional External Memory Space
  - Programming Lock for Software Security
- JTAG (IEEE std. 1149.1 Compliant) Interface
  - Boundary-scan Capabilities According to the JTAG Standard
  - Extensive On-chip Debug Support
  - Programming of Flash, EEPROM, Fuses, and Lock Bits through the JTAG Interface
- Peripheral Features
  - Two 8-bit Timer/Counters with Separate Prescalers and Compare Modes
  - Two 16-bit Timer/Counters with Separate Prescalers, Compare Modes, and Capture Modes
  - Real Time Counter with Separate Oscillator
  - Six PWM Channels
  - Dual Programmable Serial USARTs
  - Master/Slave SPI Serial Interface
  - Programmable Watchdog Timer with Separate On-chip Oscillator
  - On-chip Analog Comparator
- Special Microcontroller Features
  - Power-on Reset and Programmable Brown-out Detection
  - Internal Calibrated RC Oscillator
  - External and Internal Interrupt Sources
  - Five Sleep Modes: Idle, Power-save, Power-down, Standby, and Extended Standby
- I/O and Packages
  - 35 Programmable I/O Lines
  - 40-pin PDIP, 44-lead TQFP, and 44-pad MLF
- Operating Voltages
  - 1.8 - 5.5V for ATmega162V
  - 2.7 - 5.5V for ATmega162
- Speed Grades
  - 0 - 8 MHz for ATmega162V (see Figure 113 on page 266)
  - 0 - 16 MHz for ATmega162 (see Figure 114 on page 266)

8-bit AVR® Microcontroller with 16K Bytes In-System Programmable Flash

ATmega162
ATmega162V

Summary

2513KS–AVR–07/09

Pin Configurations

Figure 1. Pinout ATmega162

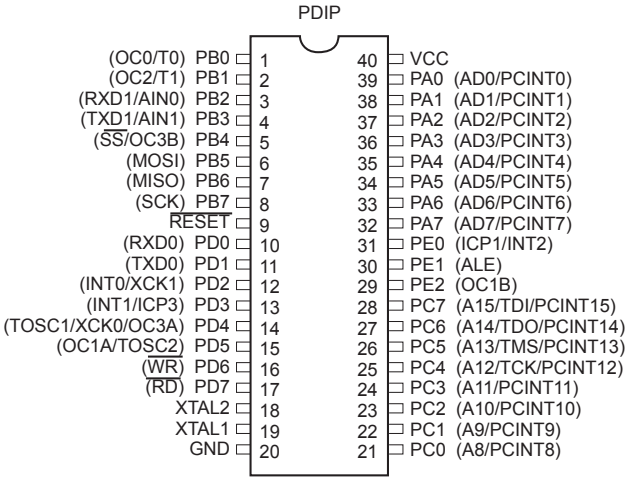

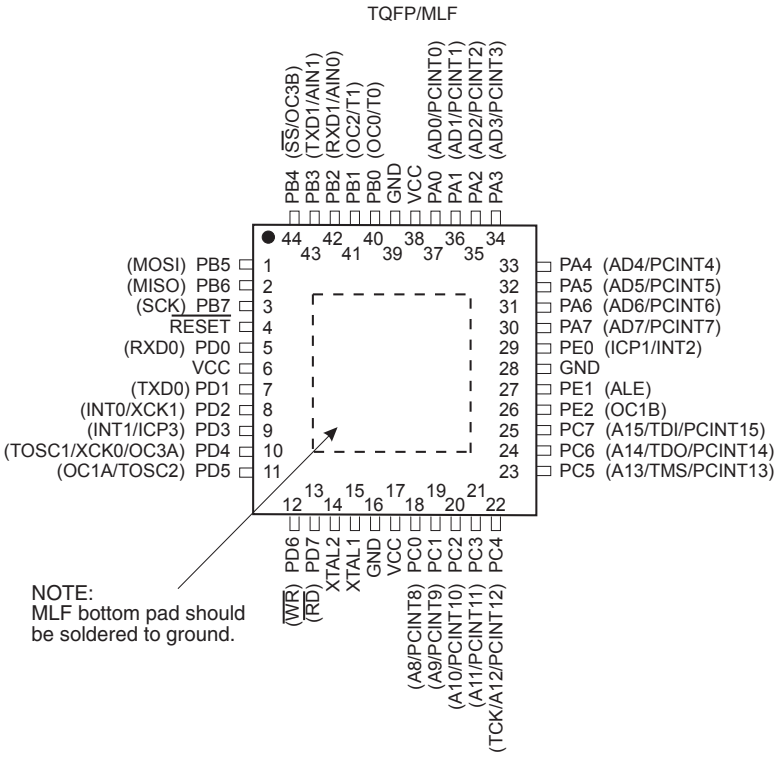

Disclaimer

Typical values contained in this datasheet are based on simulations and characterization of other AVR microcontrollers manufactured on the same process technology. Min and Max values will be available after the device is characterized.

Overview

The ATmega162 is a low-power CMOS 8-bit microcontroller based on the AVR enhanced RISC architecture. By executing powerful instructions in a single clock cycle, the ATmega162 achieves throughputs approaching 1 MIPS per MHz allowing the system designer to optimize power consumption versus processing speed.

Block Diagram

Figure 2. Block Diagram

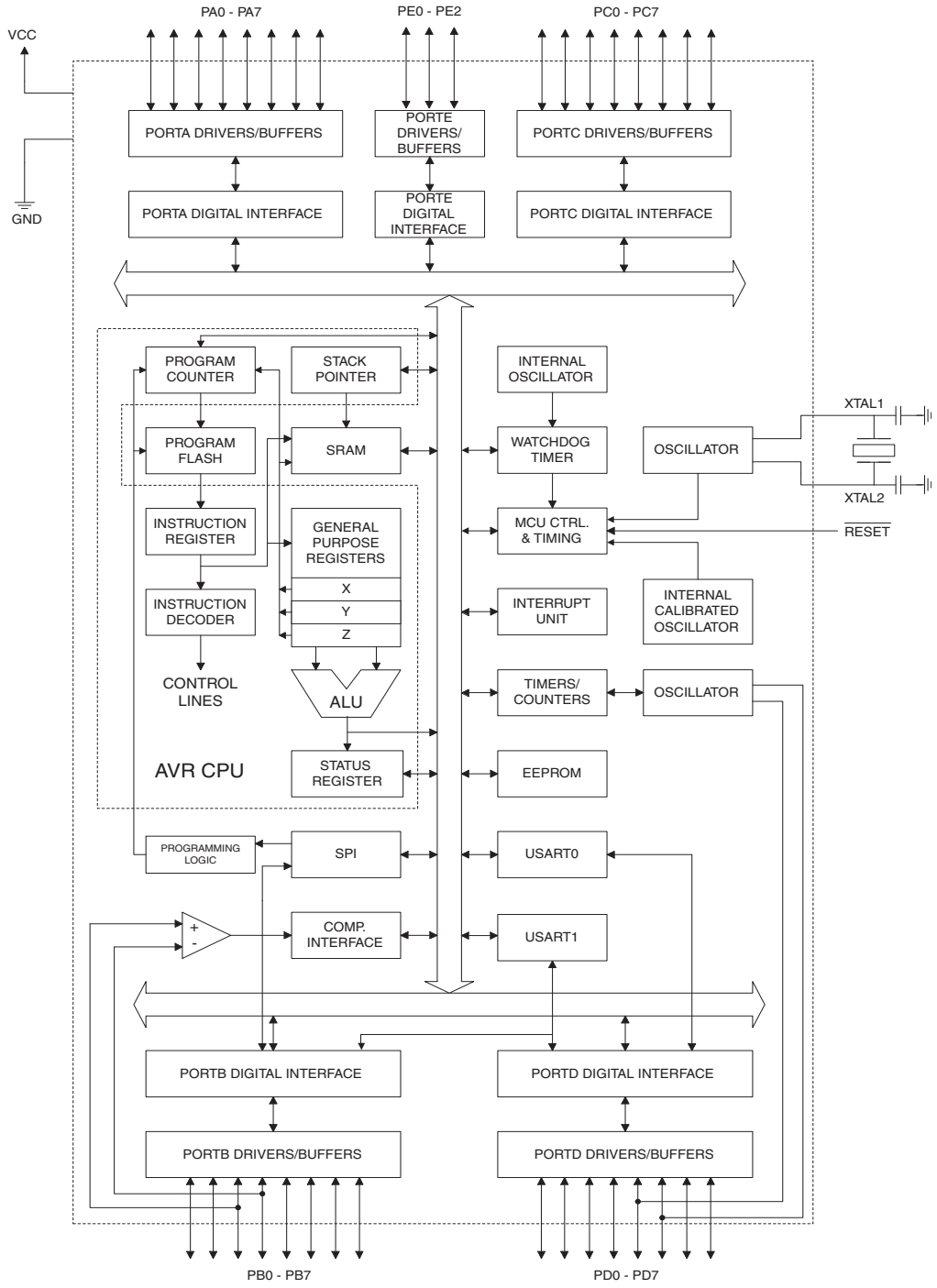

The AVR core combines a rich instruction set with 32 general purpose working registers. All the 32 registers are directly connected to the Arithmetic Logic Unit (ALU), allowing two independent registers to be accessed in one single instruction executed in one clock cycle. The resulting architecture is more code efficient while achieving throughputs up to ten times faster than conventional CISC microcontrollers.

The ATmega162 provides the following features: 16K bytes of In-System Programmable Flash with Read-While-Write capabilities, 512 bytes EEPROM, 1K bytes SRAM, an external memory interface, 35 general purpose I/O lines, 32 general purpose working registers, a JTAG interface for Boundary-scan, On-chip Debugging support and programming, four flexible Timer/Counters with compare modes, internal and external interrupts, two serial programmable USARTs, a programmable Watchdog Timer with Internal Oscillator, an SPI serial port, and five software selectable power saving modes. The Idle mode stops the CPU while allowing the SRAM, Timer/Counters, SPI port, and interrupt system to continue functioning. The Power-down mode saves the register contents but freezes the Oscillator, disabling all other chip functions until the next interrupt or Hardware Reset. In Power-save mode, the Asynchronous Timer continues to run, allowing the user to maintain a timer base while the rest of the device is sleeping. In Standby mode, the crystal/resonator Oscillator is running while the rest of the device is sleeping. This allows very fast start-up combined with low-power consumption. In Extended Standby mode, both the main Oscillator and the Asynchronous Timer continue to run.

The device is manufactured using Atmel's high density non-volatile memory technology. The On-chip ISP Flash allows the program memory to be reprogrammed In-System through an SPI serial interface, by a conventional non-volatile memory programmer, or by an On-chip Boot Program running on the AVR core. The Boot Program can use any interface to download the Application Program in the Application Flash memory. Software in the Boot Flash section will continue to run while the Application Flash section is updated, providing true Read-While-Write operation. By combining an 8-bit RISC CPU with In-System Self-Programmable Flash on a monolithic chip, the Atmel ATmega162 is a powerful microcontroller that provides a highly flexible and cost effective solution to many embedded control applications.

The ATmega162 AVR is supported with a full suite of program and system development tools including: C compilers, macro assemblers, program debugger/simulators, In-Circuit Emulators, and evaluation kits.

ATmega161 and ATmega162 Compatibility

The ATmega162 is a highly complex microcontroller where the number of I/O locations supersedes the 64 I/O locations reserved in the AVR instruction set. To ensure back-ward compatibility with the ATmega161, all I/O locations present in ATmega161 have the same locations in ATmega162. Some additional I/O locations are added in an Extended I/O space starting from 0x60 to 0xFF, (i.e., in the ATmega162 internal RAM space). These locations can be reached by using LD/LDS/LDD and ST/STS/STD instructions only, not by using IN and OUT instructions. The relocation of the internal RAM space may still be a problem for ATmega161 users. Also, the increased number of Interrupt Vectors might be a problem if the code uses absolute addresses. To solve these problems, an ATmega161 compatibility mode can be selected by programming the fuse M161C. In this mode, none of the functions in the Extended I/O space are in use, so the internal RAM is located as in ATmega161. Also, the Extended Interrupt Vec-tors are removed. The ATmega162 is 100% pin compatible with ATmega161, and can replace the ATmega161 on current Printed Circuit Boards. However, the location of Fuse bits and the electrical characteristics differs between the two devices.

ATmega161 Compatibility Mode

Programming the M161C will change the following functionality:

- The extended I/O map will be configured as internal RAM once the M161C Fuse is programmed.

- The timed sequence for changing the Watchdog Time-out period is disabled. See "Timed Sequences for Changing the Configuration of the Watchdog Timer" on page 56 for details.
- The double buffering of the USART Receive Registers is disabled. See "AVR USART vs. AVR UART – Compatibility" on page 168 for details.
- Pin change interrupts are not supported (Control Registers are located in Extended I/O).
- One 16 bits Timer/Counter (Timer/Counter1) only. Timer/Counter3 is not accessible.

Note that the shared UBRRHI Register in ATmega161 is split into two separate registers in ATmega162, UBRR0H and UBRR1H. The location of these registers will not be affected by the ATmega161 compatibility fuse.

Pin Descriptions

VCC Digital supply voltage

GND Ground

Port A (PA7..PA0) Port A is an 8-bit bi-directional I/O port with internal pull-up resistors (selected for each bit). The Port A output buffers have symmetrical drive characteristics with both high sink and source capability. When pins PA0 to PA7 are used as inputs and are externally pulled low, they will source current if the internal pull-up resistors are activated. The Port A pins are tri-stated when a reset condition becomes active, even if the clock is not running.

Port A also serves the functions of various special features of the ATmega162 as listed on page 72.

Port B (PB7..PB0) Port B is an 8-bit bi-directional I/O port with internal pull-up resistors (selected for each bit). The Port B output buffers have symmetrical drive characteristics with both high sink and source capability. As inputs, Port B pins that are externally pulled low will source current if the pull-up resistors are activated. The Port B pins are tri-stated when a reset condition becomes active, even if the clock is not running.

Port B also serves the functions of various special features of the ATmega162 as listed on page 72.

Port C (PC7..PC0) Port C is an 8-bit bi-directional I/O port with internal pull-up resistors (selected for each bit). The Port C output buffers have symmetrical drive characteristics with both high sink and source capability. As inputs, Port C pins that are externally pulled low will source current if the pull-up resistors are activated. The Port C pins are tri-stated when a reset condition becomes active, even if the clock is not running. If the JTAG interface is enabled, the pull-up resistors on pins PC7(TDI), PC5(TMS) and PC4(TCK) will be activated even if a Reset occurs.

Port C also serves the functions of the JTAG interface and other special features of the ATmega162 as listed on page 75.

Port D (PD7..PD0)

Port D is an 8-bit bi-directional I/O port with internal pull-up resistors (selected for each bit). The Port D output buffers have symmetrical drive characteristics with both high sink and source capability. As inputs, Port D pins that are externally pulled low will source current if the pull-up resistors are activated. The Port D pins are tri-stated when a reset condition becomes active, even if the clock is not running.

Port D also serves the functions of various special features of the ATmega162 as listed on page 78.

Port E(PE2..PE0)

Port E is an 3-bit bi-directional I/O port with internal pull-up resistors (selected for each bit). The Port E output buffers have symmetrical drive characteristics with both high sink and source capability. As inputs, Port E pins that are externally pulled low will source current if the pull-up resistors are activated. The Port E pins are tri-stated when a reset condition becomes active, even if the clock is not running.

Port E also serves the functions of various special features of the ATmega162 as listed on page 81.

$\overline{\text{RESET}}$

Reset input. A low level on this pin for longer than the minimum pulse length will generate a Reset, even if the clock is not running. The minimum pulse length is given in Table 18 on page 48. Shorter pulses are not guaranteed to generate a reset.

XTAL1

Input to the Inverting Oscillator amplifier and input to the internal clock operating circuit.

XTAL2

Output from the Inverting Oscillator amplifier.

Resources

A comprehensive set of development tools, application notes and datasheets are available for download on http://www.atmel.com/avr.

Data Retention

Reliability Qualification results show that the projected data retention failure rate is much less than 1 PPM over 20 years at 85°C or 100 years at 25°C.

Register Summary

Address	Name	Bit 7	Bit 6	Bit 5	Bit 4	Bit 3	Bit 2	Bit 1	Bit 0	Page
(0xFF)	Reserved	–	–	–	–	–	–	–	–	
..	Reserved	–	–	–	–	–	–	–	–	
(0x9E)	Reserved	–	–	–	–	–	–	–	–	
(0x9D)	Reserved	–	–	–	–	–	–	–	–	
(0x9C)	Reserved	–	–	–	–	–	–	–	–	
(0x9B)	Reserved	–	–	–	–	–	–	–	–	
(0x9A)	Reserved	–	–	–	–	–	–	–	–	
(0x99)	Reserved	–	–	–	–	–	–	–	–	
(0x98)	Reserved	–	–	–	–	–	–	–	–	
(0x97)	Reserved	–	–	–	–	–	–	–	–	
(0x96)	Reserved	–	–	–	–	–	–	–	–	
(0x95)	Reserved	–	–	–	–	–	–	–	–	
(0x94)	Reserved	–	–	–	–	–	–	–	–	
(0x93)	Reserved	–	–	–	–	–	–	–	–	
(0x92)	Reserved	–	–	–	–	–	–	–	–	
(0x91)	Reserved	–	–	–	–	–	–	–	–	
(0x90)	Reserved	–	–	–	–	–	–	–	–	
(0x8F)	Reserved	–	–	–	–	–	–	–	–	
(0x8E)	Reserved	–	–	–	–	–	–	–	–	
(0x8D)	Reserved	–	–	–	–	–	–	–	–	
(0x8C)	Reserved	–	–	–	–	–	–	–	–	
(0x8B)	TCCR3A	COM3A1	COM3A0	COM3B1	COM3B0	FOC3A	FOC3B	WGM31	WGM30	131
(0x8A)	TCCR3B	ICNC3	ICES3	–	WGM33	WGM32	CS32	CS31	CS30	128
(0x89)	TCNT3H	Timer/Counter3 – Counter Register High Byte								133
(0x88)	TCNT3L	Timer/Counter3 – Counter Register Low Byte								133
(0x87)	OCR3AH	Timer/Counter3 – Output Compare Register A High Byte								133
(0x86)	OCR3AL	Timer/Counter3 – Output Compare Register A Low Byte								133
(0x85)	OCR3BH	Timer/Counter3 – Output Compare Register B High Byte								133
(0x84)	OCR3BL	Timer/Counter3 – Output Compare Register B Low Byte								133
(0x83)	Reserved	–	–	–	–	–	–	–	–	
(0x82)	Reserved	–	–	–	–	–	–	–	–	
(0x81)	ICR3H	Timer/Counter3 – Input Capture Register High Byte								134
(0x80)	ICR3L	Timer/Counter3 – Input Capture Register Low Byte								134
(0x7F)	Reserved	–	–	–	–	–	–	–	–	
(0x7E)	Reserved	–	–	–	–	–	–	–	–	
(0x7D)	ETIMSK	–	–	TICIE3	OCIE3A	OCIE3B	TOIE3	–	–	135
(0x7C)	ETIFR	–	–	ICF3	OCF3A	OCF3B	TOV3	–	–	135
(0x7B)	Reserved	–	–	–	–	–	–	–	–	
(0x7A)	Reserved	–	–	–	–	–	–	–	–	
(0x79)	Reserved	–	–	–	–	–	–	–	–	
(0x78)	Reserved	–	–	–	–	–	–	–	–	
(0x77)	Reserved	–	–	–	–	–	–	–	–	
(0x76)	Reserved	–	–	–	–	–	–	–	–	
(0x75)	Reserved	–	–	–	–	–	–	–	–	
(0x74)	Reserved	–	–	–	–	–	–	–	–	
(0x73)	Reserved	–	–	–	–	–	–	–	–	
(0x72)	Reserved	–	–	–	–	–	–	–	–	
(0x71)	Reserved	–	–	–	–	–	–	–	–	
(0x70)	Reserved	–	–	–	–	–	–	–	–	
(0x6F)	Reserved	–	–	–	–	–	–	–	–	
(0x6E)	Reserved	–	–	–	–	–	–	–	–	
(0x6D)	Reserved	–	–	–	–	–	–	–	–	
(0x6C)	PCMSK1	PCINT15	PCINT14	PCINT13	PCINT12	PCINT11	PCINT10	PCINT9	PCINT8	88
(0x6B)	PCMSK0	PCINT7	PCINT6	PCINT5	PCINT4	PCINT3	PCINT2	PCINT1	PCINT0	88
(0x6A)	Reserved	–	–	–	–	–	–	–	–	
(0x69)	Reserved	–	–	–	–	–	–	–	–	
(0x68)	Reserved	–	–	–	–	–	–	–	–	
(0x67)	Reserved	–	–	–	–	–	–	–	–	
(0x66)	Reserved	–	–	–	–	–	–	–	–	
(0x65)	Reserved	–	–	–	–	–	–	–	–	
(0x64)	Reserved	–	–	–	–	–	–	–	–	
(0x63)	Reserved	–	–	–	–	–	–	–	–	
(0x62)	Reserved	–	–	–	–	–	–	–	–	
(0x61)	CLKPR	CLKPCE	–	–	–	CLKPS3	CLKPS2	CLKPS1	CLKPS0	41

Address	Name	Bit 7	Bit 6	Bit 5	Bit 4	Bit 3	Bit 2	Bit 1	Bit 0	Page
(0x60)	Reserved	–	–	–	–	–	–	–	–	
0x3F (0x5F)	SREG	I	T	H	S	V	N	Z	C	10
0x3E (0x5E)	SPH	SP15	SP14	SP13	SP12	SP11	SP10	SP9	SP8	13
0x3D (0x5D)	SPL	SP7	SP6	SP5	SP4	SP3	SP2	SP1	SP0	13
0x3C[2](0x5C)[2]	UBRR1H	URSEL1				UBRR1[11:8]				190
	UCSR1C	URSEL1	UMSEL1	UPM11	UPM10	USBS1	UCSZ11	UCSZ10	UCPOL1	189
0x3B (0x5B)	GICR	INT1	INT0	INT2	PCIE1	PCIE0	–	IVSEL	IVCE	61, 86
0x3A (0x5A)	GIFR	INTF1	INTF0	INTF2	PCIF1	PCIF0	–	–	–	87
0x39 (0x59)	TIMSK	TOIE1	OCIE1A	OCIE1B	OCIE2	TICIE1	TOIE2	TOIE0	OCIE0	102, 134, 154
0x38 (0x58)	TIFR	TOV1	OCF1A	OCF1B	OCF2	ICF1	TOV2	TOV0	OCF0	103, 135, 155
0x37 (0x57)	SPMCR	SPMIE	RWWSB	–	RWWSRE	BLBSET	PGWRT	PGERS	SPMEN	221
0x36 (0x56)	EMCUCR	SM0	SRL2	SRL1	SRL0	SRW01	SRW00	SRW11	ISC2	30,44,85
0x35 (0x55)	MCUCR	SRE	SRW10	SE	SM1	ISC11	ISC10	ISC01	ISC00	30,43,84
0x34 (0x54)	MCUCSR	JTD	–	SM2	JTRF	WDRF	BORF	EXTRF	PORF	43,51,207
0x33 (0x53)	TCCR0	FOC0	WGM00	COM01	COM00	WGM01	CS02	CS01	CS00	100
0x32 (0x52)	TCNT0	Timer/Counter0 (8 Bits)								102
0x31 (0x51)	OCR0	Timer/Counter0 Output Compare Register								102
0x30 (0x50)	SFIOR	TSM	XMBK	XMM2	XMM1	XMM0	PUD	PSR2	PSR310	32,70,105,156
0x2F (0x4F)	TCCR1A	COM1A1	COM1A0	COM1B1	COM1B0	FOC1A	FOC1B	WGM11	WGM10	128
0x2E (0x4E)	TCCR1B	ICNC1	ICES1	–	WGM13	WGM12	CS12	CS11	CS10	131
0x2D (0x4D)	TCNT1H	Timer/Counter1 – Counter Register High Byte								133
0x2C (0x4C)	TCNT1L	Timer/Counter1 – Counter Register Low Byte								133
0x2B (0x4B)	OCR1AH	Timer/Counter1 – Output Compare Register A High Byte								133
0x2A (0x4A)	OCR1AL	Timer/Counter1 – Output Compare Register A Low Byte								133
0x29 (0x49)	OCR1BH	Timer/Counter1 – Output Compare Register B High Byte								133
0x28 (0x48)	OCR1BL	Timer/Counter1 – Output Compare Register B Low Byte								133
0x27 (0x47)	TCCR2	FOC2	WGM20	COM21	COM20	WGM21	CS22	CS21	CS20	149
0x26 (0x46)	ASSR	–	–	–	–	AS2	TCN2UB	OCR2UB	TCR2UB	152
0x25 (0x45)	ICR1H	Timer/Counter1 – Input Capture Register High Byte								134
0x24 (0x44)	ICR1L	Timer/Counter1 – Input Capture Register Low Byte								134
0x23 (0x43)	TCNT2	Timer/Counter2 (8 Bits)								151
0x22 (0x42)	OCR2	Timer/Counter2 Output Compare Register								151
0x21 (0x41)	WDTCR	–	–	–	WDCE	WDE	WDP2	WDP1	WDP0	53
0x20[2] (0x40)[2]	UBRR0H	URSEL0	–	–	–	UBRR0[11:8]				190
	UCSR0C	URSEL0	UMSEL0	UPM01	UPM00	USBS0	UCSZ01	UCSZ00	UCPOL0	189
0x1F (0x3F)	EEARH	–	–	–	–	–	–	–	EEAR8	20
0x1E (0x3E)	EEARL	EEPROM Address Register Low Byte								20
0x1D (0x3D)	EEDR	EEPROM Data Register								21
0x1C (0x3C)	EECR	–	–	–	–	EERIE	EEMWE	EEWE	EERE	21
0x1B (0x3B)	PORTA	PORTA7	PORTA6	PORTA5	PORTA4	PORTA3	PORTA2	PORTA1	PORTA0	82
0x1A (0x3A)	DDRA	DDA7	DDA6	DDA5	DDA4	DDA3	DDA2	DDA1	DDA0	82
0x19 (0x39)	PINA	PINA7	PINA6	PINA5	PINA4	PINA3	PINA2	PINA1	PINA0	82
0x18 (0x38)	PORTB	PORTB7	PORTB6	PORTB5	PORTB4	PORTB3	PORTB2	PORTB1	PORTB0	82
0x17 (0x37)	DDRB	DDB7	DDB6	DDB5	DDB4	DDB3	DDB2	DDB1	DDB0	82
0x16 (0x36)	PINB	PINB7	PINB6	PINB5	PINB4	PINB3	PINB2	PINB1	PINB0	82
0x15 (0x35)	PORTC	PORTC7	PORTC6	PORTC5	PORTC4	PORTC3	PORTC2	PORTC1	PORTC0	82
0x14 (0x34)	DDRC	DDC7	DDC6	DDC5	DDC4	DDC3	DDC2	DDC1	DDC0	82
0x13 (0x33)	PINC	PINC7	PINC6	PINC5	PINC4	PINC3	PINC2	PINC1	PINC0	83
0x12 (0x32)	PORTD	PORTD7	PORTD6	PORTD5	PORTD4	PORTD3	PORTD2	PORTD1	PORTD0	83
0x11 (0x31)	DDRD	DDD7	DDD6	DDD5	DDD4	DDD3	DDD2	DDD1	DDD0	83
0x10 (0x30)	PIND	PIND7	PIND6	PIND5	PIND4	PIND3	PIND2	PIND1	PIND0	83
0x0F (0x2F)	SPDR	SPI Data Register								164
0x0E (0x2E)	SPSR	SPIF	WCOL	–	–	–	–	–	SPI2X	164
0x0D (0x2D)	SPCR	SPIE	SPE	DORD	MSTR	CPOL	CPHA	SPR1	SPR0	162
0x0C (0x2C)	UDR0	USART0 I/O Data Register								186
0x0B (0x2B)	UCSR0A	RXC0	TXC0	UDRE0	FE0	DOR0	UPE0	U2X0	MPCM0	186
0x0A (0x2A)	UCSR0B	RXCIE0	TXCIE0	UDRIE0	RXEN0	TXEN0	UCSZ02	RXB80	TXB80	187
0x09 (0x29)	UBRR0L	USART0 Baud Rate Register Low Byte								190
0x08 (0x28)	ACSR	ACD	ACBG	ACO	ACI	ACIE	ACIC	ACIS1	ACIS0	195
0x07 (0x27)	PORTE	–	–	–	–	–	PORTE2	PORTE1	PORTE0	83
0x06 (0x26)	DDRE	–	–	–	–	–	DDE2	DDE1	DDE0	83
0x05 (0x25)	PINE	–	–	–	–	–	PINE2	PINE1	PINE0	83
0x04[1] (0x24)[1]	OSCCAL	–	CAL6	CAL5	CAL4	CAL3	CAL2	CAL1	CAL0	39
	OCDR	On-chip Debug Register								202
0x03 (0x23)	UDR1	USART1 I/O Data Register								186
0x02 (0x22)	UCSR1A	RXC1	TXC1	UDRE1	FE1	DOR1	UPE1	U2X1	MPCM1	186

Address	Name	Bit 7	Bit 6	Bit 5	Bit 4	Bit 3	Bit 2	Bit 1	Bit 0	Page
0x01 (0x21)	UCSR1B	RXCIE1	TXCIE1	UDRIE1	RXEN1	TXEN1	UCSZ12	RXB81	TXB81	187
0x00 (0x20)	UBRR1L	USART1 Baud Rate Register Low Byte								190

Notes:
1. When the OCDEN Fuse is unprogrammed, the OSCCAL Register is always accessed on this address. Refer to the debugger specific documentation for details on how to use the OCDR Register.
2. Refer to the USART description for details on how to access UBRRH and UCSRC.
3. For compatibility with future devices, reserved bits should be written to zero if accessed. Reserved I/O memory addresses should never be written.
4. Some of the Status Flags are cleared by writing a logical one to them. Note that the CBI and SBI instructions will operate on all bits in the I/O Register, writing a one back into any flag read as set, thus clearing the flag. The CBI and SBI instructions work with registers 0x00 to 0x1F only.

Instruction Set Summary

Mnemonics	Operands	Description	Operation	Flags	#Clocks
ARITHMETIC AND LOGIC INSTRUCTIONS					
ADD	Rd, Rr	Add two Registers	Rd ← Rd + Rr	Z,C,N,V,H	1
ADC	Rd, Rr	Add with Carry two Registers	Rd ← Rd + Rr + C	Z,C,N,V,H	1
ADIW	Rdl,K	Add Immediate to Word	Rdh:Rdl ← Rdh:Rdl + K	Z,C,N,V,S	2
SUB	Rd, Rr	Subtract two Registers	Rd ← Rd - Rr	Z,C,N,V,H	1
SUBI	Rd, K	Subtract Constant from Register	Rd ← Rd - K	Z,C,N,V,H	1
SBC	Rd, Rr	Subtract with Carry two Registers	Rd ← Rd - Rr - C	Z,C,N,V,H	1
SBCI	Rd, K	Subtract with Carry Constant from Reg.	Rd ← Rd - K - C	Z,C,N,V,H	1
SBIW	Rdl,K	Subtract Immediate from Word	Rdh:Rdl ← Rdh:Rdl - K	Z,C,N,V,S	2
AND	Rd, Rr	Logical AND Registers	Rd ← Rd • Rr	Z,N,V	1
ANDI	Rd, K	Logical AND Register and Constant	Rd ← Rd • K	Z,N,V	1
OR	Rd, Rr	Logical OR Registers	Rd ← Rd v Rr	Z,N,V	1
ORI	Rd, K	Logical OR Register and Constant	Rd ← Rd v K	Z,N,V	1
EOR	Rd, Rr	Exclusive OR Registers	Rd ← Rd ⊕ Rr	Z,N,V	1
COM	Rd	One's Complement	Rd ← 0xFF − Rd	Z,C,N,V	1
NEG	Rd	Two's Complement	Rd ← 0x00 − Rd	Z,C,N,V,H	1
SBR	Rd,K	Set Bit(s) in Register	Rd ← Rd v K	Z,N,V	1
CBR	Rd,K	Clear Bit(s) in Register	Rd ← Rd • (0xFF - K)	Z,N,V	1
INC	Rd	Increment	Rd ← Rd + 1	Z,N,V	1
DEC	Rd	Decrement	Rd ← Rd − 1	Z,N,V	1
TST	Rd	Test for Zero or Minus	Rd ← Rd • Rd	Z,N,V	1
CLR	Rd	Clear Register	Rd ← Rd ⊕ Rd	Z,N,V	1
SER	Rd	Set Register	Rd ← 0xFF	None	1
MUL	Rd, Rr	Multiply Unsigned	R1:R0 ← Rd x Rr	Z,C	2
MULS	Rd, Rr	Multiply Signed	R1:R0 ← Rd x Rr	Z,C	2
MULSU	Rd, Rr	Multiply Signed with Unsigned	R1:R0 ← Rd x Rr	Z,C	2
FMUL	Rd, Rr	Fractional Multiply Unsigned	R1:R0 ← (Rd x Rr) << 1	Z,C	2
FMULS	Rd, Rr	Fractional Multiply Signed	R1:R0 ← (Rd x Rr) << 1	Z,C	2
FMULSU	Rd, Rr	Fractional Multiply Signed with Unsigned	R1:R0 ← (Rd x Rr) << 1	Z,C	2
BRANCH INSTRUCTIONS					
RJMP	k	Relative Jump	PC ← PC + k + 1	None	2
IJMP		Indirect Jump to (Z)	PC ← Z	None	2
JMP	k	Direct Jump	PC ← k	None	3
RCALL	k	Relative Subroutine Call	PC ← PC + k + 1	None	3
ICALL		Indirect Call to (Z)	PC ← Z	None	3
CALL	k	Direct Subroutine Call	PC ← k	None	4
RET		Subroutine Return	PC ← STACK	None	4
RETI		Interrupt Return	PC ← STACK	I	4
CPSE	Rd,Rr	Compare, Skip if Equal	if (Rd = Rr) PC ← PC + 2 or 3	None	1/2/3
CP	Rd,Rr	Compare	Rd − Rr	Z, N,V,C,H	1
CPC	Rd,Rr	Compare with Carry	Rd − Rr − C	Z, N,V,C,H	1
CPI	Rd,K	Compare Register with Immediate	Rd − K	Z, N,V,C,H	1
SBRC	Rr, b	Skip if Bit in Register Cleared	if (Rr(b)=0) PC ← PC + 2 or 3	None	1/2/3
SBRS	Rr, b	Skip if Bit in Register is Set	if (Rr(b)=1) PC ← PC + 2 or 3	None	1/2/3
SBIC	P, b	Skip if Bit in I/O Register Cleared	if (P(b)=0) PC ← PC + 2 or 3	None	1/2/3
SBIS	P, b	Skip if Bit in I/O Register is Set	if (P(b)=1) PC ← PC + 2 or 3	None	1/2/3
BRBS	s, k	Branch if Status Flag Set	if (SREG(s) = 1) then PC←PC+k + 1	None	1/2
BRBC	s, k	Branch if Status Flag Cleared	if (SREG(s) = 0) then PC←PC+k + 1	None	1/2
BREQ	k	Branch if Equal	if (Z = 1) then PC ← PC + k + 1	None	1/2
BRNE	k	Branch if Not Equal	if (Z = 0) then PC ← PC + k + 1	None	1/2
BRCS	k	Branch if Carry Set	if (C = 1) then PC ← PC + k + 1	None	1/2
BRCC	k	Branch if Carry Cleared	if (C = 0) then PC ← PC + k + 1	None	1/2
BRSH	k	Branch if Same or Higher	if (C = 0) then PC ← PC + k + 1	None	1/2
BRLO	k	Branch if Lower	if (C = 1) then PC ← PC + k + 1	None	1/2
BRMI	k	Branch if Minus	if (N = 1) then PC ← PC + k + 1	None	1/2
BRPL	k	Branch if Plus	if (N = 0) then PC ← PC + k + 1	None	1/2
BRGE	k	Branch if Greater or Equal, Signed	if (N ⊕ V= 0) then PC ← PC + k + 1	None	1/2
BRLT	k	Branch if Less Than Zero, Signed	if (N ⊕ V= 1) then PC ← PC + k + 1	None	1/2
BRHS	k	Branch if Half Carry Flag Set	if (H = 1) then PC ← PC + k + 1	None	1/2
BRHC	k	Branch if Half Carry Flag Cleared	if (H = 0) then PC ← PC + k + 1	None	1/2
BRTS	k	Branch if T Flag Set	if (T = 1) then PC ← PC + k + 1	None	1/2
BRTC	k	Branch if T Flag Cleared	if (T = 0) then PC ← PC + k + 1	None	1/2
BRVS	k	Branch if Overflow Flag is Set	if (V = 1) then PC ← PC + k + 1	None	1/2
BRVC	k	Branch if Overflow Flag is Cleared	if (V = 0) then PC ← PC + k + 1	None	1/2

Mnemonics	Operands	Description	Operation	Flags	#Clocks
BRIE	k	Branch if Interrupt Enabled	if (I = 1) then PC ← PC + k + 1	None	1/2
BRID	k	Branch if Interrupt Disabled	if (I = 0) then PC ← PC + k + 1	None	1/2
DATA TRANSFER INSTRUCTIONS					
MOV	Rd, Rr	Move Between Registers	Rd ← Rr	None	1
MOVW	Rd, Rr	Copy Register Word	Rd+1:Rd ← Rr+1:Rr	None	1
LDI	Rd, K	Load Immediate	Rd ← K	None	1
LD	Rd, X	Load Indirect	Rd ← (X)	None	2
LD	Rd, X+	Load Indirect and Post-Inc.	Rd ← (X), X ← X + 1	None	2
LD	Rd, - X	Load Indirect and Pre-Dec.	X ← X - 1, Rd ← (X)	None	2
LD	Rd, Y	Load Indirect	Rd ← (Y)	None	2
LD	Rd, Y+	Load Indirect and Post-Inc.	Rd ← (Y), Y ← Y + 1	None	2
LD	Rd, - Y	Load Indirect and Pre-Dec.	Y ← Y - 1, Rd ← (Y)	None	2
LDD	Rd,Y+q	Load Indirect with Displacement	Rd ← (Y + q)	None	2
LD	Rd, Z	Load Indirect	Rd ← (Z)	None	2
LD	Rd, Z+	Load Indirect and Post-Inc.	Rd ← (Z), Z ← Z+1	None	2
LD	Rd, -Z	Load Indirect and Pre-Dec.	Z ← Z - 1, Rd ← (Z)	None	2
LDD	Rd, Z+q	Load Indirect with Displacement	Rd ← (Z + q)	None	2
LDS	Rd, k	Load Direct from SRAM	Rd ← (k)	None	2
ST	X, Rr	Store Indirect	(X) ← Rr	None	2
ST	X+, Rr	Store Indirect and Post-Inc.	(X) ← Rr, X ← X + 1	None	2
ST	- X, Rr	Store Indirect and Pre-Dec.	X ← X - 1, (X) ← Rr	None	2
ST	Y, Rr	Store Indirect	(Y) ← Rr	None	2
ST	Y+, Rr	Store Indirect and Post-Inc.	(Y) ← Rr, Y ← Y + 1	None	2
ST	- Y, Rr	Store Indirect and Pre-Dec.	Y ← Y - 1, (Y) ← Rr	None	2
STD	Y+q,Rr	Store Indirect with Displacement	(Y + q) ← Rr	None	2
ST	Z, Rr	Store Indirect	(Z) ← Rr	None	2
ST	Z+, Rr	Store Indirect and Post-Inc.	(Z) ← Rr, Z ← Z + 1	None	2
ST	-Z, Rr	Store Indirect and Pre-Dec.	Z ← Z - 1, (Z) ← Rr	None	2
STD	Z+q,Rr	Store Indirect with Displacement	(Z + q) ← Rr	None	2
STS	k, Rr	Store Direct to SRAM	(k) ← Rr	None	2
LPM		Load Program Memory	R0 ← (Z)	None	3
LPM	Rd, Z	Load Program Memory	Rd ← (Z)	None	3
LPM	Rd, Z+	Load Program Memory and Post-Inc	Rd ← (Z), Z ← Z+1	None	3
SPM		Store Program Memory	(Z) ← R1:R0	None	-
IN	Rd, P	In Port	Rd ← P	None	1
OUT	P, Rr	Out Port	P ← Rr	None	1
PUSH	Rr	Push Register on Stack	STACK ← Rr	None	2
POP	Rd	Pop Register from Stack	Rd ← STACK	None	2
BIT AND BIT-TEST INSTRUCTIONS					
SBI	P,b	Set Bit in I/O Register	I/O(P,b) ← 1	None	2
CBI	P,b	Clear Bit in I/O Register	I/O(P,b) ← 0	None	2
LSL	Rd	Logical Shift Left	Rd(n+1) ← Rd(n), Rd(0) ← 0	Z,C,N,V	1
LSR	Rd	Logical Shift Right	Rd(n) ← Rd(n+1), Rd(7) ← 0	Z,C,N,V	1
ROL	Rd	Rotate Left Through Carry	Rd(0)←C,Rd(n+1)← Rd(n),C←Rd(7)	Z,C,N,V	1
ROR	Rd	Rotate Right Through Carry	Rd(7)←C,Rd(n)← Rd(n+1),C←Rd(0)	Z,C,N,V	1
ASR	Rd	Arithmetic Shift Right	Rd(n) ← Rd(n+1), n=0..6	Z,C,N,V	1
SWAP	Rd	Swap Nibbles	Rd(3..0)←Rd(7..4),Rd(7..4)←Rd(3..0)	None	1
BSET	s	Flag Set	SREG(s) ← 1	SREG(s)	1
BCLR	s	Flag Clear	SREG(s) ← 0	SREG(s)	1
BST	Rr, b	Bit Store from Register to T	T ← Rr(b)	T	1
BLD	Rd, b	Bit load from T to Register	Rd(b) ← T	None	1
SEC		Set Carry	C ← 1	C	1
CLC		Clear Carry	C ← 0	C	1
SEN		Set Negative Flag	N ← 1	N	1
CLN		Clear Negative Flag	N ← 0	N	1
SEZ		Set Zero Flag	Z ← 1	Z	1
CLZ		Clear Zero Flag	Z ← 0	Z	1
SEI		Global Interrupt Enable	I ← 1	I	1
CLI		Global Interrupt Disable	I ← 0	I	1
SES		Set Signed Test Flag	S ← 1	S	1
CLS		Clear Signed Test Flag	S ← 0	S	1
SEV		Set Twos Complement Overflow.	V ← 1	V	1
CLV		Clear Twos Complement Overflow	V ← 0	V	1
SET		Set T in SREG	T ← 1	T	1
CLT		Clear T in SREG	T ← 0	T	1
SEH		Set Half Carry Flag in SREG	H ← 1	H	1

Mnemonics	Operands	Description	Operation	Flags	#Clocks
CLH		Clear Half Carry Flag in SREG	H ← 0	H	1
MCU CONTROL INSTRUCTIONS					
NOP		No Operation		None	1
SLEEP		Sleep	(see specific descr. for Sleep function)	None	1
WDR		Watchdog Reset	(see specific descr. for WDR/Timer)	None	1
BREAK		Break	For On-chip Debug Only	None	N/A

Ordering Information

Speed (MHz)	Power Supply	Ordering Code	Package[1]	Operation Range
8[3]	1.8 - 5.5V	ATmega162V-8AI ATmega162V-8PI ATmega162V-8MI ATmega162V-8AU[2] ATmega162V-8PU[2] ATmega162V-8MU[2]	44A 40P6 44M1 44A 40P6 44M1	Industrial (-40°C to 85°C)
16[4]	2.7 - 5.5V	ATmega162-16AI ATmega162-16PI ATmega162-16MI ATmega162-16AU[2] ATmega162-16PU[2] ATmega162-16MU[2]	44A 40P6 44M1 44A 40P6 44M1	Industrial (-40°C to 85°C)

Notes:
1. This device can also be supplied in wafer form. Please contact your local Atmel sales office for detailed ordering information and minimum quantities.
2. Pb-free packaging alternative, complies to the European Directive for Restriction of Hazardous Substances (RoHS directive).Also Halide free and fully Green.
3. See Figure 113 on page 266.
4. See Figure 114 on page 266.

Package Type	
44A	44-lead, Thin (1.0 mm) Plastic Gull Wing Quad Flat Package (TQFP)
40P6	40-pin, 0.600” Wide, Plastic Dual Inline Package (PDIP)
44M1	44-pad, 7 x 7 x 1.0 mm body, lead pitch 0.50 mm, Micro Lead Frame Package (QFN/MLF)

Packaging Information

44A

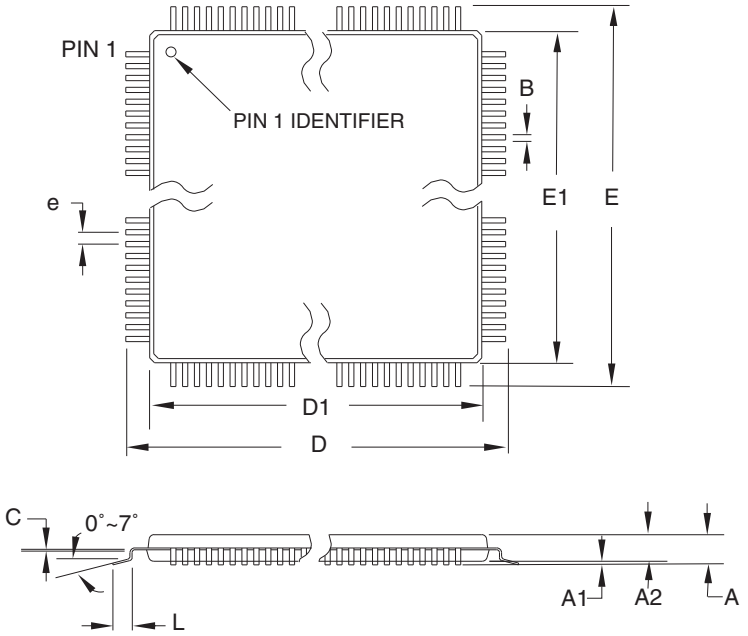

COMMON DIMENSIONS
(Unit of Measure = mm)

SYMBOL	MIN	NOM	MAX	NOTE
A	–	–	1.20	
A1	0.05	–	0.15	
A2	0.95	1.00	1.05	
D	11.75	12.00	12.25	
D1	9.90	10.00	10.10	Note 2
E	11.75	12.00	12.25	
E1	9.90	10.00	10.10	Note 2
B	0.30	–	0.45	
C	0.09	–	0.20	
L	0.45	–	0.75	
e	0.80 TYP			

Notes:
1. This package conforms to JEDEC reference MS-026, Variation ACB.
2. Dimensions D1 and E1 do not include mold protrusion. Allowable protrusion is 0.25 mm per side. Dimensions D1 and E1 are maximum plastic body size dimensions including mold mismatch.
3. Lead coplanarity is 0.10 mm maximum.

10/5/2001

	TITLE	DRAWING NO.	REV.
2325 Orchard Parkway San Jose, CA 95131	**44A,** 44-lead, 10 x 10 mm Body Size, 1.0 mm Body Thickness, 0.8 mm Lead Pitch, Thin Profile Plastic Quad Flat Package (TQFP)	44A	B

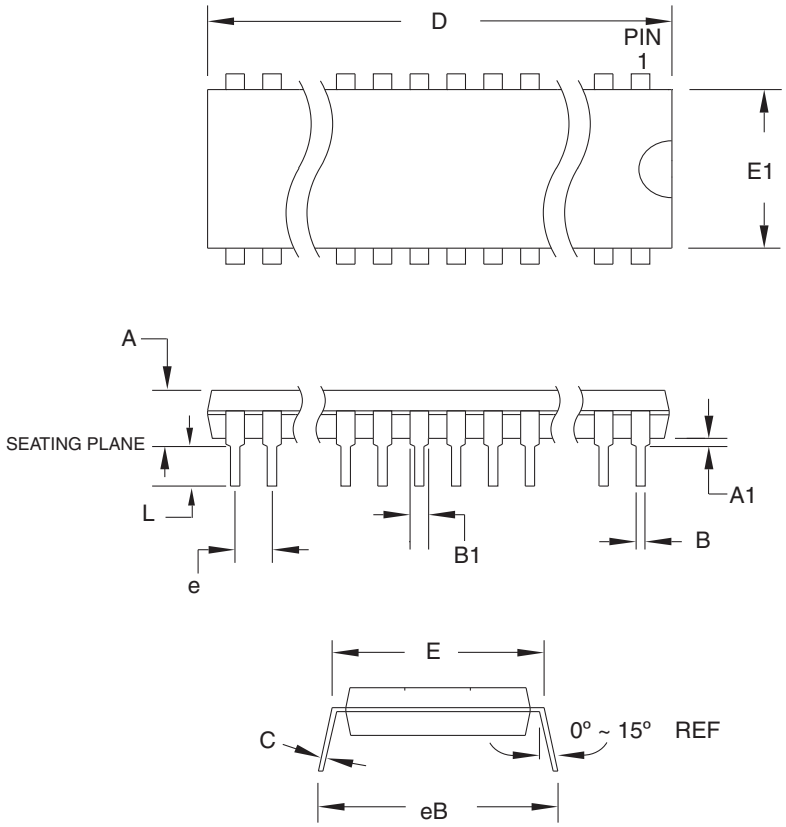

COMMON DIMENSIONS
(Unit of Measure = mm)

SYMBOL	MIN	NOM	MAX	NOTE
A	–	–	4.826	
A1	0.381	–	–	
D	52.070	–	52.578	Note 2
E	15.240	–	15.875	
E1	13.462	–	13.970	Note 2
B	0.356	–	0.559	
B1	1.041	–	1.651	
L	3.048	–	3.556	
C	0.203	–	0.381	
eB	15.494	–	17.526	
e	2.540 TYP			

Notes:
1. This package conforms to JEDEC reference MS-011, Variation AC.
2. Dimensions D and E1 do not include mold Flash or Protrusion. Mold Flash or Protrusion shall not exceed 0.25 mm (0.010").

09/28/01

	TITLE	DRAWING NO.	REV.
2325 Orchard Parkway San Jose, CA 95131	**40P6**, 40-lead (0.600"/15.24 mm Wide) Plastic Dual Inline Package (PDIP)	40P6	B

44M1

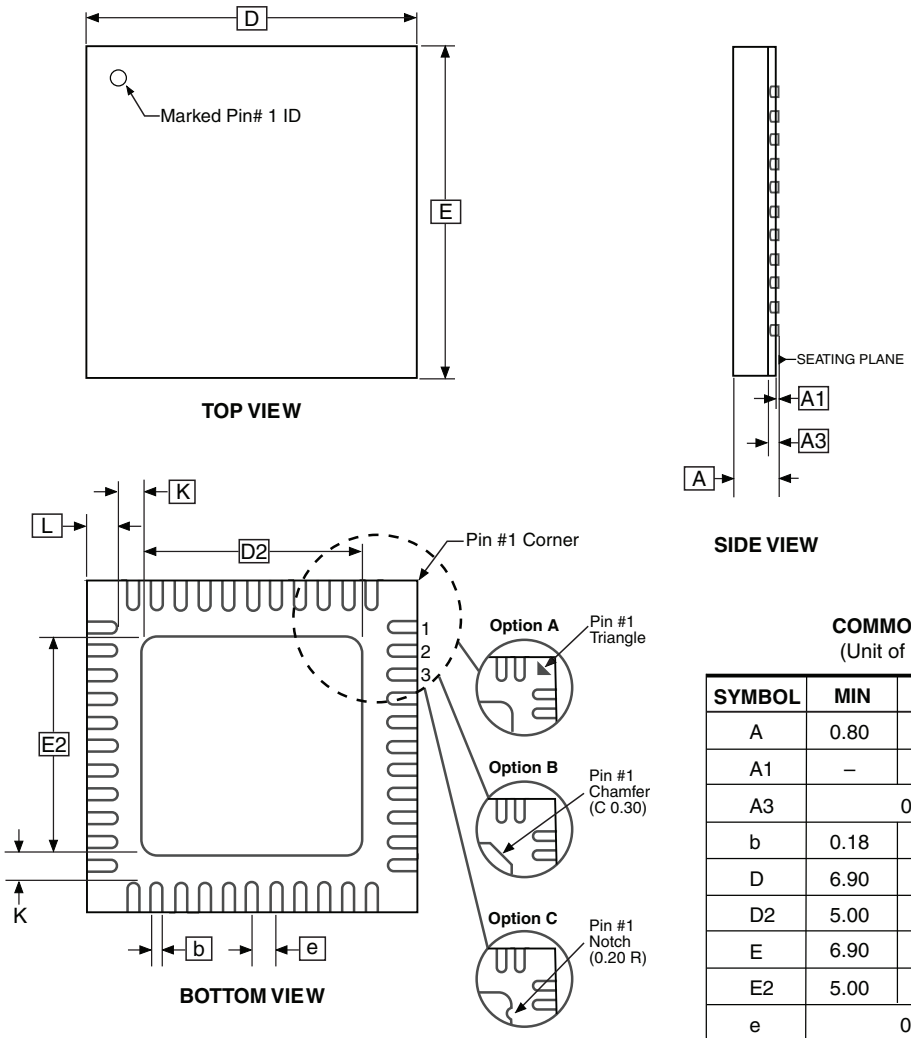

Note: JEDEC Standard MO-220, Fig. 1 (SAW Singulation) VKKD-3.

COMMON DIMENSIONS
(Unit of Measure = mm)

SYMBOL	MIN	NOM	MAX	NOTE
A	0.80	0.90	1.00	
A1	–	0.02	0.05	
A3		0.20 REF		
b	0.18	0.23	0.30	
D	6.90	7.00	7.10	
D2	5.00	5.20	5.40	
E	6.90	7.00	7.10	
E2	5.00	5.20	5.40	
e		0.50 BSC		
L	0.59	0.64	0.69	
K	0.20	0.26	0.41	

9/26/08

Package Drawing Contact: packagedrawings@atmel.com	**TITLE** **44M1,** 44-pad, 7 x 7 x 1.0 mm Body, Lead Pitch 0.50 mm, 5.20 mm Exposed Pad, Thermally Enhanced Plastic Very Thin Quad Flat No Lead Package (VQFN)	**GPC** ZWS	**DRAWING NO.** 44M1	**REV.** H

Errata

The revision letter in this section refers to the revision of the ATmega162 device.

ATmega162, all rev.

There are no errata for this revision of ATmega162. However, a proposal for solving problems regarding the JTAG instruction IDCODE is presented below.

- **IDCODE masks data from TDI input**
- **Reading EEPROM by using ST or STS to set EERE bit triggers unexpected interrupt request**
- **Interrupts may be lost when writing the timer register in asynchronous timer**

1. **IDCODE masks data from TDI input**

   The public but optional JTAG instruction IDCODE is not implemented correctly according to IEEE1149.1; a logic one is scanned into the shift register instead of the TDI input while shifting the Device ID Register. Hence, captured data from the preceding devices in the boundary scan chain are lost and replaced by all-ones, and data to succeeding devices are replaced by all-ones during Update-DR.

   If ATmega162 is the only device in the scan chain, the problem is not visible.

   Problem Fix / Workaround

   Select the Device ID Register of the ATmega162 (Either by issuing the IDCODE instruction or by entering the Test-Logic-Reset state of the TAP controller) to read out the contents of its Device ID Register and possibly data from succeeding devices of the scan chain. Note that data to succeeding devices cannot be entered during this scan, but data to preceding devices can. Issue the BYPASS instruction to the ATmega162 to select its Bypass Register while reading the Device ID Registers of preceding devices of the boundary scan chain. Never read data from succeeding devices in the boundary scan chain or upload data to the succeeding devices while the Device ID Register is selected for the ATmega162. Note that the IDCODE instruction is the default instruction selected by the Test-Logic-Reset state of the TAP-controller.

   Alternative Problem Fix / Workaround

   If the Device IDs of all devices in the boundary scan chain must be captured simultaneously (for instance if blind interrogation is used), the boundary scan chain can be connected in such way that the ATmega162 is the first device in the chain. Update-DR will still not work for the succeeding devices in the boundary scan chain as long as IDCODE is present in the JTAG Instruction Register, but the Device ID registered cannot be uploaded in any case.

2. **Reading EEPROM by using ST or STS to set EERE bit triggers unexpected interrupt request.**

   Reading EEPROM by using the ST or STS command to set the EERE bit in the EECR register triggers an unexpected EEPROM interrupt request.

   Problem Fix / Workaround

   Always use OUT or SBI to set EERE in EECR.

3. **Interrupts may be lost when writing the timer register in asynchronous timer**

   The interrupt will be lost if a timer register that is synchronous timer clock is written when the asynchronous Timer/Counter register (TCNTx) is 0x00.

   Problem Fix / Workaround

   Always check that the asynchronous Timer/Counter register neither have the value 0xFF nor 0x00 before writing to the asynchronous Timer Control Register (TCCRx), asynchronous Timer Counter Register (TCNTx), or asynchronous Output Compare Register (OCRx).

Datasheet Revision History

Please note that the referring page numbers in this section are referred to this document. The referring revision in this section are referring to the document revision.

Changes from Rev. 2513J-08/07 to Rev. 2513K-07/09

1. Updated "Errata" on page 314.
2. Updated the last page with Atmel's new adresses.

Changes from Rev. 2513I-04/07 to Rev. 2513J-08/07

1. Updated "Features" on page 1.
2. Added "Data Retention" on page 7.
3. Updated "Errata" on page 314.
4. Updated "Version" on page 205.
5. Updated "C Code Example(1)" on page 172.
6. Updated Figure 18 on page 35.
7. Updated "Clock Distribution" on page 35.
8. Updated "SPI Serial Programming Algorithm" on page 246.
9. Updated "Slave Mode" on page 162.

Changes from Rev. 2513H-04/06 to Rev. 2513I-04/07

1. Updated "Using all 64KB Locations of External Memory" on page 34.
2. Updated "Bit 6 – ACBG: Analog Comparator Bandgap Select" on page 195.
3. Updated V_{OH} conditions in"DC Characteristics" on page 264.

Changes from Rev. 2513G-03/05 to Rev. 2513H-04/06

1. Added "Resources" on page 7.
2. Updated "Calibrated Internal RC Oscillator" on page 38.
3. Updated note for Table 19 on page 50.
4. Updated "Serial Peripheral Interface – SPI" on page 157.

Changes from Rev. 2513F-09/03 to Rev. 2513G-03/05

1. MLF-package alternative changed to "Quad Flat No-Lead/Micro Lead Frame Package QFN/MLF".
2. Updated "Electrical Characteristics" on page 264
3. Updated "Ordering Information" on page 14

Changes from Rev. 2513D-04/03 to Rev. 2513E-09/03

1. Removed "Preliminary" from the datasheet.
2. Added note on Figure 1 on page 2.

3. Renamed and updated "On-chip Debug System" to "JTAG Interface and On-chip Debug System" on page 46.

4. Updated Table 18 on page 48 and Table 19 on page 50.

5. Updated "Test Access Port – TAP" on page 197 regarding JTAGEN.

6. Updated description for the JTD bit on page 207.

7. Added note on JTAGEN in Table 99 on page 233.

8. Updated Absolute Maximum Ratings* and DC Characteristics in "Electrical Characteristics" on page 264.

9. Added a proposal for solving problems regarding the JTAG instruction IDCODE in "Errata" on page 314.

Changes from Rev. 2513C-09/02 to Rev. 2513D-04/03

1. Updated the "Ordering Information" on page 310 and "Packaging Information" on page 311.

2. Updated "Features" on page 1.

3. Added characterization plots under "ATmega162 Typical Characteristics" on page 275.

4. Added Chip Erase as a first step under "Programming the Flash" on page 260 and "Programming the EEPROM" on page 262.

5. Changed CAL7, the highest bit in the OSCCAL Register, to a reserved bit on page 39 and in "Register Summary" on page 304.

6. Changed CPCE to CLKPCE on page 41.

7. Corrected code examples on page 55.

8. Corrected OCn waveforms in Figure 52 on page 120.

9. Various minor Timer1 corrections.

10. Added note under "Filling the Temporary Buffer (Page Loading)" on page 224 about writing to the EEPROM during an SPM Page Load.

11. Added section "EEPROM Write During Power-down Sleep Mode" on page 24.

12. Added information about PWM symmetry for Timer0 on page 98 and Timer2 on page 147.

13. Updated Table 18 on page 48, Table 20 on page 50, Table 36 on page 77, Table 83 on page 205, Table 109 on page 247, Table 112 on page 267, and Table 113 on page 268.

14. Added Figures for "Absolute Maximum Frequency as a function of VCC, ATmega162" on page 266.

15. Updated Figure 29 on page 64, Figure 32 on page 68, and Figure 88 on page 210.

16. Removed Table 114, "External RC Oscillator, Typical Frequencies[1]," on page 265.

17. Updated "Electrical Characteristics" on page 264.

Changes from Rev. 2513B-09/02 to Rev. 2513C-09/02

1. Changed the Endurance on the Flash to 10,000 Write/Erase Cycles.

Changes from Rev. 2513A-05/02 to Rev. 2513B-09/02

1. Added information for ATmega162U.

Information about ATmega162U included in "Features" on page 1, Table 19, "BODLEVEL Fuse Coding," on page 50, and "Ordering Information" on page 14.

Headquarters

Atmel Corporation
2325 Orchard Parkway
San Jose, CA 95131
USA
Tel: 1(408) 441-0311
Fax: 1(408) 487-2600

International

Atmel Asia
Unit 1-5 & 16, 19/F
BEA Tower, Millennium City 5
418 Kwun Tong Road
Kwun Tong, Kowloon
Hong Kong
Tel: (852) 2245-6100
Fax: (852) 2722-1369

Atmel Europe
Le Krebs
8, Rue Jean-Pierre Timbaud
BP 309
78054 Saint-Quentin-en-
Yvelines Cedex
France
Tel: (33) 1-30-60-70-00
Fax: (33) 1-30-60-71-11

Atmel Japan
9F, Tonetsu Shinkawa Bldg.
1-24-8 Shinkawa
Chuo-ku, Tokyo 104-0033
Japan
Tel: (81) 3-3523-3551
Fax: (81) 3-3523-7581

Product Contact

Web Site
www.atmel.com

Technical Support
avr@atmel.com

Sales Contact
www.atmel.com/contacts

Literature Requests
www.atmel.com/literature

Disclaimer: The information in this document is provided in connection with Atmel products. No license, express or implied, by estoppel or otherwise, to any intellectual property right is granted by this document or in connection with the sale of Atmel products. **EXCEPT AS SET FORTH IN ATMEL'S TERMS AND CONDITIONS OF SALE LOCATED ON ATMEL'S WEB SITE, ATMEL ASSUMES NO LIABILITY WHATSOEVER AND DISCLAIMS ANY EXPRESS, IMPLIED OR STATUTORY WARRANTY RELATING TO ITS PRODUCTS INCLUDING, BUT NOT LIMITED TO, THE IMPLIED WARRANTY OF MERCHANTABILITY, FITNESS FOR A PARTICULAR PURPOSE, OR NON-INFRINGEMENT. IN NO EVENT SHALL ATMEL BE LIABLE FOR ANY DIRECT, INDIRECT, CONSEQUENTIAL, PUNITIVE, SPECIAL OR INCIDENTAL DAMAGES (INCLUDING, WITHOUT LIMITATION, DAMAGES FOR LOSS OF PROFITS, BUSINESS INTERRUPTION, OR LOSS OF INFORMATION) ARISING OUT OF THE USE OR INABILITY TO USE THIS DOCUMENT, EVEN IF ATMEL HAS BEEN ADVISED OF THE POSSIBILITY OF SUCH DAMAGES.** Atmel makes no representations or warranties with respect to the accuracy or completeness of the contents of this document and reserves the right to make changes to specifications and product descriptions at any time without notice. Atmel does not make any commitment to update the information contained herein. Unless specifically provided otherwise, Atmel products are not suitable for, and shall not be used in, automotive applications. Atmel's products are not intended, authorized, or warranted for use as components in applications intended to support or sustain life.

© 2009 Atmel Corporation. All rights reserved. Atmel®, Atmel logo and combinations thereof, AVR® and others are registered trademarks or trademarks of Atmel Corporation or its subsidiaries. Other terms and product names may be trademarks of others.

2513KS–AVR–07/09