Features

- High-performance, Low-power AVR® 8-bit Microcontroller
- Advanced RISC Architecture
  - 133 Powerful Instructions – Most Single Clock Cycle Execution
  - 32 x 8 General Purpose Working Registers + Peripheral Control Registers
  - Fully Static Operation
  - Up to 16 MIPS Throughput at 16 MHz
  - On-chip 2-cycle Multiplier
- High Endurance Non-volatile Memory segments
  - 128K Bytes of In-System Self-programmable Flash program memory
  - 4K Bytes EEPROM
  - 4K Bytes Internal SRAM
  - Write/Erase cycles: 10,000 Flash/100,000 EEPROM
  - Data retention: 20 years at 85°C/100 years at 25°C[(1)]
  - Optional Boot Code Section with Independent Lock Bits
    - In-System Programming by On-chip Boot Program
    - True Read-While-Write Operation
  - Up to 64K Bytes Optional External Memory Space
  - Programming Lock for Software Security
  - SPI Interface for In-System Programming
- JTAG (IEEE std. 1149.1 Compliant) Interface
  - Boundary-scan Capabilities According to the JTAG Standard
  - Extensive On-chip Debug Support
  - Programming of Flash, EEPROM, Fuses and Lock Bits through the JTAG Interface
- Peripheral Features
  - Two 8-bit Timer/Counters with Separate Prescalers and Compare Modes
  - Two Expanded 16-bit Timer/Counters with Separate Prescaler, Compare Mode and Capture Mode
  - Real Time Counter with Separate Oscillator
  - Two 8-bit PWM Channels
  - 6 PWM Channels with Programmable Resolution from 2 to 16 Bits
  - Output Compare Modulator
  - 8-channel, 10-bit ADC
    - 8 Single-ended Channels
    - 7 Differential Channels
    - 2 Differential Channels with Programmable Gain at 1x, 10x, or 200x
  - Byte-oriented Two-wire Serial Interface
  - Dual Programmable Serial USARTs
  - Master/Slave SPI Serial Interface
  - Programmable Watchdog Timer with On-chip Oscillator
  - On-chip Analog Comparator
- Special Microcontroller Features
  - Power-on Reset and Programmable Brown-out Detection
  - Internal Calibrated RC Oscillator
  - External and Internal Interrupt Sources
  - Six Sleep Modes: Idle, ADC Noise Reduction, Power-save, Power-down, Standby, and Extended Standby
  - Software Selectable Clock Frequency
  - ATmega103 Compatibility Mode Selected by a Fuse
  - Global Pull-up Disable
- I/O and Packages
  - 53 Programmable I/O Lines
  - 64-lead TQFP and 64-pad QFN/MLF
- Operating Voltages
  - 2.7 - 5.5V
- Speed Grades
  - 0 - 16 MHz

8-bit AVR® Microcontroller with 128K Bytes In-System Programmable Flash

ATmega128A

Summary

Rev. 8151GS–AVR–07/10

1. Pin Configurations

Figure 1-1. Pinout ATmega128A

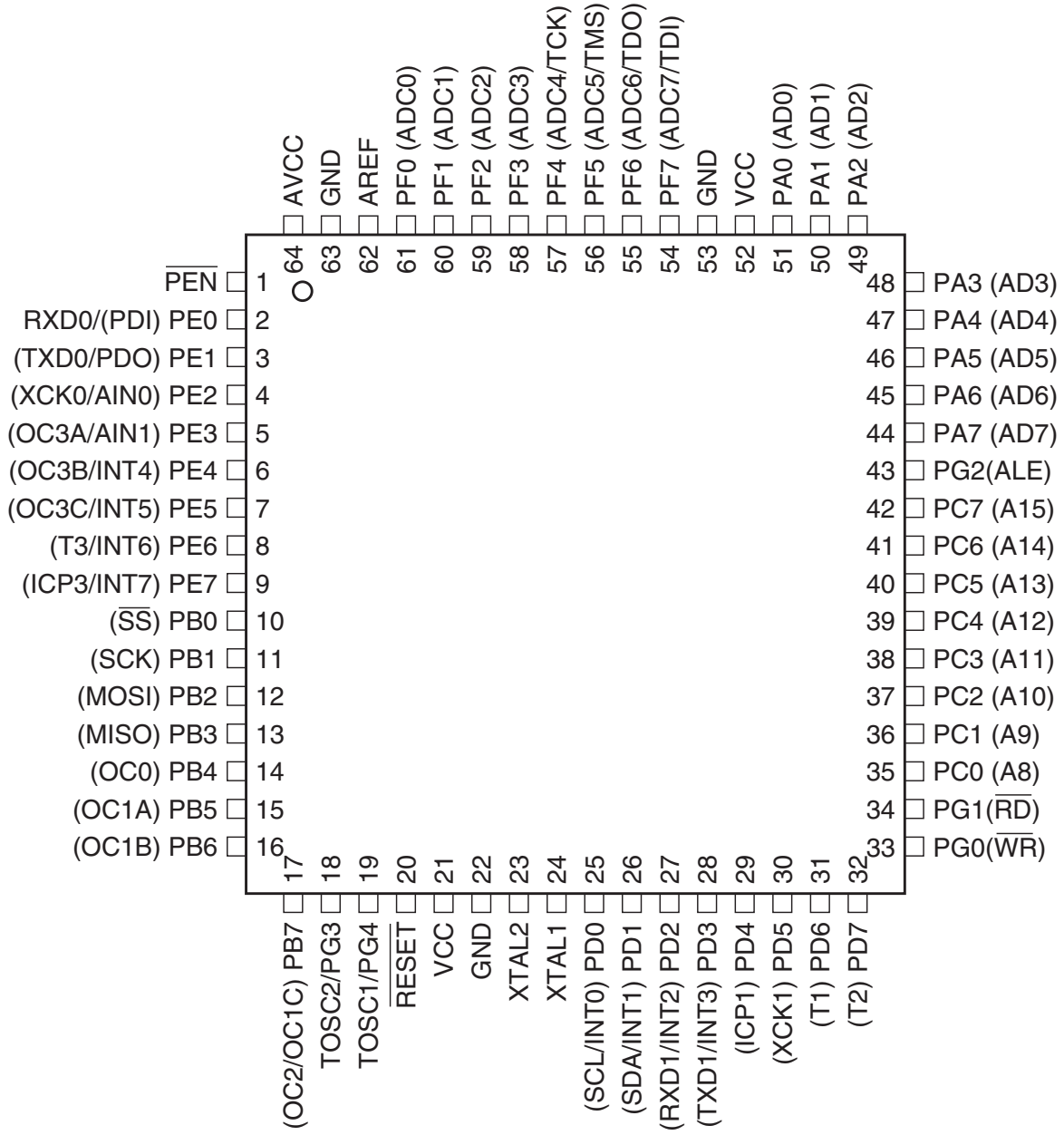

Note: The Pinout figure applies to both TQFP and MLF packages. The bottom pad under the QFN/MLF package should be soldered to ground.

2. Overview

The ATmega128A is a low-power CMOS 8-bit microcontroller based on the AVR enhanced RISC architecture. By executing powerful instructions in a single clock cycle, the ATmega128A achieves throughputs approaching 1 MIPS per MHz allowing the system designer to optimize power consumption versus processing speed.

2.1 Block Diagram

Figure 2-1. Block Diagram

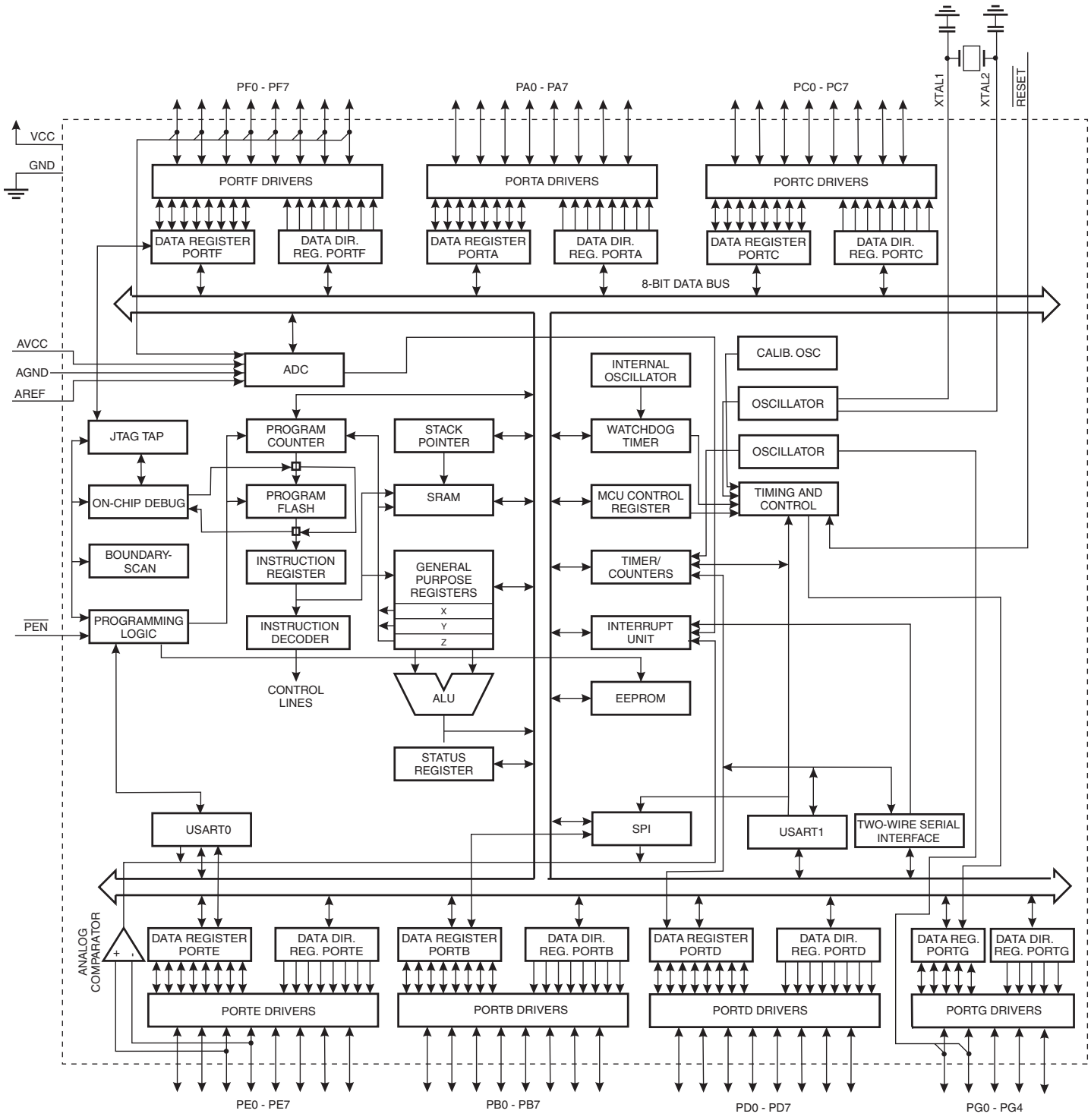

The AVR core combines a rich instruction set with 32 general purpose working registers. All the 32 registers are directly connected to the Arithmetic Logic Unit (ALU), allowing two independent registers to be accessed in one single instruction executed in one clock cycle. The resulting architecture is more code efficient while achieving throughputs up to ten times faster than conventional CISC microcontrollers.

The ATmega128A provides the following features: 128K bytes of In-System Programmable Flash with Read-While-Write capabilities, 4K bytes EEPROM, 4K bytes SRAM, 53 general purpose I/O lines, 32 general purpose working registers, Real Time Counter (RTC), four flexible Timer/Counters with compare modes and PWM, 2 USARTs, a byte oriented Two-wire Serial Interface, an 8-channel, 10-bit ADC with optional differential input stage with programmable gain, programmable Watchdog Timer with Internal Oscillator, an SPI serial port, IEEE std. 1149.1 compliant JTAG test interface, also used for accessing the On-chip Debug system and programming and six software selectable power saving modes. The Idle mode stops the CPU while allowing the SRAM, Timer/Counters, SPI port, and interrupt system to continue functioning. The Power-down mode saves the register contents but freezes the Oscillator, disabling all other chip functions until the next interrupt or Hardware Reset. In Power-save mode, the asynchronous timer continues to run, allowing the user to maintain a timer base while the rest of the device is sleeping. The ADC Noise Reduction mode stops the CPU and all I/O modules except Asynchronous Timer and ADC, to minimize switching noise during ADC conversions. In Standby mode, the Crystal/Resonator Oscillator is running while the rest of the device is sleeping. This allows very fast start-up combined with low power consumption. In Extended Standby mode, both the main Oscillator and the Asynchronous Timer continue to run.

The device is manufactured using Atmel's high-density nonvolatile memory technology. The On-chip ISP Flash allows the program memory to be reprogrammed in-system through an SPI serial interface, by a conventional nonvolatile memory programmer, or by an On-chip Boot program running on the AVR core. The boot program can use any interface to download the application program in the application Flash memory. Software in the Boot Flash section will continue to run while the Application Flash section is updated, providing true Read-While-Write operation. By combining an 8-bit RISC CPU with In-System Self-Programmable Flash on a monolithic chip, the Atmel ATmega128A is a powerful microcontroller that provides a highly flexible and cost effective solution to many embedded control applications.

The ATmega128A AVR is supported with a full suite of program and system development tools including: C compilers, macro assemblers, program debugger/simulators, in-circuit emulators, and evaluation kits.

2.2 ATmega103 and ATmega128A Compatibility

The ATmega128A is a highly complex microcontroller where the number of I/O locations supersedes the 64 I/O locations reserved in the AVR instruction set. To ensure backward compatibility with the ATmega103, all I/O locations present in ATmega103 have the same location in ATmega128A. Most additional I/O locations are added in an Extended I/O space starting from $60 to $FF, (i.e., in the ATmega103 internal RAM space). These locations can be reached by using LD/LDS/LDD and ST/STS/STD instructions only, not by using IN and OUT instructions. The relocation of the internal RAM space may still be a problem for ATmega103 users. Also, the increased number of interrupt vectors might be a problem if the code uses absolute addresses. To solve these problems, an ATmega103 compatibility mode can be selected by programming the fuse M103C. In this mode, none of the functions in the Extended I/O space are in use, so the internal RAM is located as in ATmega103. Also, the Extended Interrupt vectors are removed.

The ATmega128A is 100% pin compatible with ATmega103, and can replace the ATmega103 on current Printed Circuit Boards. The application note “Replacing ATmega103 by ATmega128A” describes what the user should be aware of replacing the ATmega103 by an ATmega128A.

2.2.1 ATmega103 Compatibility Mode

By programming the M103C fuse, the ATmega128 will be compatible with the ATmega103 regards to RAM, I/O pins and interrupt vectors as described above. However, some new features in ATmega128 are not available in this compatibility mode, these features are listed below:

- One USART instead of two, Asynchronous mode only. Only the eight least significant bits of the Baud Rate Register is available.
- One 16 bits Timer/Counter with two compare registers instead of two 16-bit Timer/Counters with three compare registers.
- Two-wire serial interface is not supported.
- Port C is output only.
- Port G serves alternate functions only (not a general I/O port).
- Port F serves as digital input only in addition to analog input to the ADC.
- Boot Loader capabilities is not supported.
- It is not possible to adjust the frequency of the internal calibrated RC Oscillator.
- The External Memory Interface can not release any Address pins for general I/O, neither configure different wait-states to different External Memory Address sections.
- In addition, there are some other minor differences to make it more compatible to ATmega103:
- Only EXTRF and PORF exists in MCUCSR.
- Timed sequence not required for Watchdog Time-out change.
- External Interrupt pins 3 - 0 serve as level interrupt only.
- USART has no FIFO buffer, so data overrun comes earlier.

Unused I/O bits in ATmega103 should be written to 0 to ensure same operation in ATmega128.

2.3 Pin Descriptions

2.3.1 VCC

Digital supply voltage.

2.3.2 GND

Ground.

2.3.3 Port A (PA7:PA0)

Port A is an 8-bit bi-directional I/O port with internal pull-up resistors (selected for each bit). The Port A output buffers have symmetrical drive characteristics with both high sink and source capability. As inputs, Port A pins that are externally pulled low will source current if the pull-up resistors are activated. The Port A pins are tri-stated when a reset condition becomes active, even if the clock is not running.

Port A also serves the functions of various special features of the ATmega128A as listed on page 73.

2.3.4 Port B (PB7:PB0)

Port B is an 8-bit bi-directional I/O port with internal pull-up resistors (selected for each bit). The Port B output buffers have symmetrical drive characteristics with both high sink and source capability. As inputs, Port B pins that are externally pulled low will source current if the pull-up resistors are activated. The Port B pins are tri-stated when a reset condition becomes active, even if the clock is not running.

Port B also serves the functions of various special features of the ATmega128A as listed on page 74.

2.3.5 Port C (PC7:PC0)

Port C is an 8-bit bi-directional I/O port with internal pull-up resistors (selected for each bit). The Port C output buffers have symmetrical drive characteristics with both high sink and source capability. As inputs, Port C pins that are externally pulled low will source current if the pull-up resistors are activated. The Port C pins are tri-stated when a reset condition becomes active, even if the clock is not running.

Port C also serves the functions of special features of the ATmega128A as listed on page 76. In ATmega103 compatibility mode, Port C is output only, and the port C pins are **not** tri-stated when a reset condition becomes active.

Note: The ATmega128A is by default shipped in ATmega103 compatibility mode. Thus, if the parts are not programmed before they are put on the PCB, PORTC will be output during first power up, and until the ATmega103 compatibility mode is disabled.

2.3.6 Port D (PD7:PD0)

Port D is an 8-bit bi-directional I/O port with internal pull-up resistors (selected for each bit). The Port D output buffers have symmetrical drive characteristics with both high sink and source capability. As inputs, Port D pins that are externally pulled low will source current if the pull-up resistors are activated. The Port D pins are tri-stated when a reset condition becomes active, even if the clock is not running.

Port D also serves the functions of various special features of the ATmega128A as listed on page 78.

2.3.7 Port E (PE7:PE0)

Port E is an 8-bit bi-directional I/O port with internal pull-up resistors (selected for each bit). The Port E output buffers have symmetrical drive characteristics with both high sink and source capability. As inputs, Port E pins that are externally pulled low will source current if the pull-up resistors are activated. The Port E pins are tri-stated when a reset condition becomes active, even if the clock is not running.

Port E also serves the functions of various special features of the ATmega128A as listed on page 81.

2.3.8 Port F (PF7:PF0)

Port F serves as the analog inputs to the A/D Converter.

Port F also serves as an 8-bit bi-directional I/O port, if the A/D Converter is not used. Port pins can provide internal pull-up resistors (selected for each bit). The Port F output buffers have symmetrical drive characteristics with both high sink and source capability. As inputs, Port F pins that are externally pulled low will source current if the pull-up resistors are activated. The Port F pins are tri-stated when a reset condition becomes active, even if the clock is not running. If the

JTAG interface is enabled, the pull-up resistors on pins PF7(TDI), PF5(TMS), and PF4(TCK) will be activated even if a Reset occurs.

The TDO pin is tri-stated unless TAP states that shift out data are entered.

Port F also serves the functions of the JTAG interface.

In ATmega103 compatibility mode, Port F is an input Port only.

2.3.9 Port G (PG4:PG0)

Port G is a 5-bit bi-directional I/O port with internal pull-up resistors (selected for each bit). The Port G output buffers have symmetrical drive characteristics with both high sink and source capability. As inputs, Port G pins that are externally pulled low will source current if the pull-up resistors are activated. The Port G pins are tri-stated when a reset condition becomes active, even if the clock is not running.

Port G also serves the functions of various special features.

The port G pins are tri-stated when a reset condition becomes active, even if the clock is not running.

In ATmega103 compatibility mode, these pins only serves as strobes signals to the external memory as well as input to the 32 kHz Oscillator, and the pins are initialized to PG0 = 1, PG1 = 1, and PG2 = 0 asynchronously when a reset condition becomes active, even if the clock is not running. PG3 and PG4 are oscillator pins.

2.3.10 $\overline{\text{RESET}}$

Reset input. A low level on this pin for longer than the minimum pulse length will generate a reset, even if the clock is not running. The minimum pulse length is given in "System and Reset Characteristics" on page 324. Shorter pulses are not guaranteed to generate a reset.

2.3.11 XTAL1

Input to the inverting Oscillator amplifier and input to the internal clock operating circuit.

2.3.12 XTAL2

Output from the inverting Oscillator amplifier.

2.3.13 AVCC

AVCC is the supply voltage pin for Port F and the A/D Converter. It should be externally connected to V_{CC}, even if the ADC is not used. If the ADC is used, it should be connected to V_{CC} through a low-pass filter.

2.3.14 AREF

AREF is the analog reference pin for the A/D Converter.

2.3.15 PEN

PEN is a programming enable pin for the SPI Serial Programming mode, and is internally pulled high . By holding this pin low during a Power-on Reset, the device will enter the SPI Serial Programming mode. $\overline{\text{PEN}}$ has no function during normal operation.

3. Resources

A comprehensive set of development tools, application notes, and datasheets are available for download on http://www.atmel.com/avr.

ATmega128A/L rev. A - M characterization is found in the ATmega128A Appendix B.

4. Data Retention

Reliability Qualification results show that the projected data retention failure rate is much less than 1 PPM over 20 years at 85°C or 100 years at 25°C.

5. Register Summary (Continued)

Address	Name	Bit 7	Bit 6	Bit 5	Bit 4	Bit 3	Bit 2	Bit 1	Bit 0	Page
($FF)	Reserved	–	–	–	–	–	–	–	–	
:	Reserved	–	–	–	–	–	–	–	–	
($9E)	Reserved	–	–	–	–	–	–	–	–	
($9D)	UCSR1C	–	UMSEL1	UPM11	UPM10	USBS1	UCSZ11	UCSZ10	UCPOL1	195
($9C)	UDR1	USART1 I/O Data Register								192
($9B)	UCSR1A	RXC1	TXC1	UDRE1	FE1	DOR1	UPE1	U2X1	MPCM1	193
($9A)	UCSR1B	RXCIE1	TXCIE1	UDRIE1	RXEN1	TXEN1	UCSZ12	RXB81	TXB81	194
($99)	UBRR1L	USART1 Baud Rate Register Low								197
($98)	UBRR1H	–	–	–	–	USART1 Baud Rate Register High				197
($97)	Reserved	–	–	–	–	–	–	–	–	
($96)	Reserved	–	–	–	–	–	–	–	–	
($95)	UCSR0C	–	UMSEL0	UPM01	UPM00	USBS0	UCSZ01	UCSZ00	UCPOL0	195
($94)	Reserved	–	–	–	–	–	–	–	–	
($93)	Reserved	–	–	–	–	–	–	–	–	
($92)	Reserved	–	–	–	–	–	–	–	–	
($91)	Reserved	–	–	–	–	–	–	–	–	
($90)	UBRR0H	–	–	–	–	USART0 Baud Rate Register High				197
($8F)	Reserved	–	–	–	–	–	–	–	–	
($8E)	Reserved	–	–	–	–	–	–	–	–	
($8D)	Reserved	–	–	–	–	–	–	–	–	
($8C)	TCCR3C	FOC3A	FOC3B	FOC3C	–	–	–	–	–	138
($8B)	TCCR3A	COM3A1	COM3A0	COM3B1	COM3B0	COM3C1	COM3C0	WGM31	WGM30	134
($8A)	TCCR3B	ICNC3	ICES3	–	WGM33	WGM32	CS32	CS31	CS30	137
($89)	TCNT3H	Timer/Counter3 – Counter Register High Byte								139
($88)	TCNT3L	Timer/Counter3 – Counter Register Low Byte								139
($87)	OCR3AH	Timer/Counter3 – Output Compare Register A High Byte								140
($86)	OCR3AL	Timer/Counter3 – Output Compare Register A Low Byte								140
($85)	OCR3BH	Timer/Counter3 – Output Compare Register B High Byte								140
($84)	OCR3BL	Timer/Counter3 – Output Compare Register B Low Byte								140
($83)	OCR3CH	Timer/Counter3 – Output Compare Register C High Byte								140
($82)	OCR3CL	Timer/Counter3 – Output Compare Register C Low Byte								140
($81)	ICR3H	Timer/Counter3 – Input Capture Register High Byte								141
($80)	ICR3L	Timer/Counter3 – Input Capture Register Low Byte								141
($7F)	Reserved	–	–	–	–	–	–	–	–	
($7E)	Reserved	–	–	–	–	–	–	–	–	
($7D)	ETIMSK	–	–	TICIE3	OCIE3A	OCIE3B	TOIE3	OCIE3C	OCIE1C	142
($7C)	ETIFR	–	–	ICF3	OCF3A	OCF3B	TOV3	OCF3C	OCF1C	143
($7B)	Reserved	–	–	–	–	–	–	–	–	
($7A)	TCCR1C	FOC1A	FOC1B	FOC1C	–	–	–	–	–	138
($79)	OCR1CH	Timer/Counter1 – Output Compare Register C High Byte								140
($78)	OCR1CL	Timer/Counter1 – Output Compare Register C Low Byte								140
($77)	Reserved	–	–	–	–	–	–	–	–	
($76)	Reserved	–	–	–	–	–	–	–	–	
($75)	Reserved	–	–	–	–	–	–	–	–	
($74)	TWCR	TWINT	TWEA	TWSTA	TWSTO	TWWC	TWEN	–	TWIE	226
($73)	TWDR	Two-wire Serial Interface Data Register								228
($72)	TWAR	TWA6	TWA5	TWA4	TWA3	TWA2	TWA1	TWA0	TWGCE	229
($71)	TWSR	TWS7	TWS6	TWS5	TWS4	TWS3	–	TWPS1	TWPS0	228
($70)	TWBR	Two-wire Serial Interface Bit Rate Register								226
($6F)	OSCCAL	Oscillator Calibration Register								44
($6E)	Reserved	–	–	–	–	–	–	–	–	
($6D)	XMCRA	–	SRL2	SRL1	SRL0	SRW01	SRW00	SRW11		34
($6C)	XMCRB	XMBK	–	–	–	–	XMM2	XMM1	XMM0	35
($6B)	Reserved	–	–	–	–	–	–	–	–	
($6A)	EICRA	ISC31	ISC30	ISC21	ISC20	ISC11	ISC10	ISC01	ISC00	90
($69)	Reserved	–	–	–	–	–	–	–	–	
($68)	SPMCSR	SPMIE	RWWSB	–	RWWSRE	BLBSET	PGWRT	PGERS	SPMEN	289
($67)	Reserved	–	–	–	–	–	–	–	–	
($66)	Reserved	–	–	–	–	–	–	–	–	
($65)	PORTG	–	–	–	PORTG4	PORTG3	PORTG2	PORTG1	PORTG0	89
($64)	DDRG	–	–	–	DDG4	DDG3	DDG2	DDG1	DDG0	89
($63)	PING	–	–	–	PING4	PING3	PING2	PING1	PING0	89

5. Register Summary (Continued)

Address	Name	Bit 7	Bit 6	Bit 5	Bit 4	Bit 3	Bit 2	Bit 1	Bit 0	Page
($62)	PORTF	PORTF7	PORTF6	PORTF5	PORTF4	PORTF3	PORTF2	PORTF1	PORTF0	89
($61)	DDRF	DDF7	DDF6	DDF5	DDF4	DDF3	DDF2	DDF1	DDF0	89
($60)	Reserved	–	–	–	–	–	–	–	–	
$3F ($5F)	SREG	I	T	H	S	V	N	Z	C	10
$3E ($5E)	SPH	SP15	SP14	SP13	SP12	SP11	SP10	SP9	SP8	13
$3D ($5D)	SPL	SP7	SP6	SP5	SP4	SP3	SP2	SP1	SP0	13
$3C ($5C)	XDIV	XDIVEN	XDIV6	XDIV5	XDIV4	XDIV3	XDIV2	XDIV1	XDIV0	38
$3B ($5B)	RAMPZ	–	–	–	–	–	–	–	RAMPZ0	14
$3A ($5A)	EICRB	ISC71	ISC70	ISC61	ISC60	ISC51	ISC50	ISC41	ISC40	91
$39 ($59)	EIMSK	INT7	INT6	INT5	INT4	INT3	INT2	INT1	INT0	92
$38 ($58)	EIFR	INTF7	INTF6	INTF5	INTF4	INTF3	INTF	INTF1	INTF0	92
$37 ($57)	TIMSK	OCIE2	TOIE2	TICIE1	OCIE1A	OCIE1B	TOIE1	OCIE0	TOIE0	110, 141, 162
$36 ($56)	TIFR	OCF2	TOV2	ICF1	OCF1A	OCF1B	TOV1	OCF0	TOV0	110, 143, 162
$35 ($55)	MCUCR	SRE	SRW10	SE	SM1	SM0	SM2	IVSEL	IVCE	33, 50, 63
$34 ($54)	MCUCSR	JTD	–	–	JTRF	WDRF	BORF	EXTRF	PORF	56, 257
$33 ($53)	TCCR0	FOC0	WGM00	COM01	COM00	WGM01	CS02	CS01	CS00	106
$32 ($52)	TCNT0	Timer/Counter0 (8 Bit)								109
$31 ($51)	OCR0	Timer/Counter0 Output Compare Register								109
$30 ($50)	ASSR	–	–	–	–	AS0	TCN0UB	OCR0UB	TCR0UB	109
$2F ($4F)	TCCR1A	COM1A1	COM1A0	COM1B1	COM1B0	COM1C1	COM1C0	WGM11	WGM10	134
$2E ($4E)	TCCR1B	ICNC1	ICES1	–	WGM13	WGM12	CS12	CS11	CS10	137
$2D ($4D)	TCNT1H	Timer/Counter1 – Counter Register High Byte								139
$2C ($4C)	TCNT1L	Timer/Counter1 – Counter Register Low Byte								139
$2B ($4B)	OCR1AH	Timer/Counter1 – Output Compare Register A High Byte								139
$2A ($4A)	OCR1AL	Timer/Counter1 – Output Compare Register A Low Byte								139
$29 ($49)	OCR1BH	Timer/Counter1 – Output Compare Register B High Byte								139
$28 ($48)	OCR1BL	Timer/Counter1 – Output Compare Register B Low Byte								139
$27 ($47)	ICR1H	Timer/Counter1 – Input Capture Register High Byte								140
$26 ($46)	ICR1L	Timer/Counter1 – Input Capture Register Low Byte								140
$25 ($45)	TCCR2	FOC2	WGM20	COM21	COM20	WGM21	CS22	CS21	CS20	159
$24 ($44)	TCNT2	Timer/Counter2 (8 Bit)								161
$23 ($43)	OCR2	Timer/Counter2 Output Compare Register								162
$22 ($42)	OCDR	IDRD/OCDR7	OCDR6	OCDR5	OCDR4	OCDR3	OCDR2	OCDR1	OCDR0	276
$21 ($41)	WDTCR	–	–	–	WDCE	WDE	WDP2	WDP1	WDP0	57
$20 ($40)	SFIOR	TSM	–	–	–	ACME	PUD	PSR0	PSR321	86, 111, 146, 231
$1F ($3F)	EEARH	–	–	–	–	EEPROM Address Register High				30
$1E ($3E)	EEARL	EEPROM Address Register Low Byte								30
$1D ($3D)	EEDR	EEPROM Data Register								30
$1C ($3C)	EECR	–	–	–	–	EERIE	EEMWE	EEWE	EERE	30
$1B ($3B)	PORTA	PORTA7	PORTA6	PORTA5	PORTA4	PORTA3	PORTA2	PORTA1	PORTA0	87
$1A ($3A)	DDRA	DDA7	DDA6	DDA5	DDA4	DDA3	DDA2	DDA1	DDA0	87
$19 ($39)	PINA	PINA7	PINA6	PINA5	PINA4	PINA3	PINA2	PINA1	PINA0	87
$18 ($38)	PORTB	PORTB7	PORTB6	PORTB5	PORTB4	PORTB3	PORTB2	PORTB1	PORTB0	87
$17 ($37)	DDRB	DDB7	DDB6	DDB5	DDB4	DDB3	DDB2	DDB1	DDB0	87
$16 ($36)	PINB	PINB7	PINB6	PINB5	PINB4	PINB3	PINB2	PINB1	PINB0	87
$15 ($35)	PORTC	PORTC7	PORTC6	PORTC5	PORTC4	PORTC3	PORTC2	PORTC1	PORTC0	87
$14 ($34)	DDRC	DDC7	DDC6	DDC5	DDC4	DDC3	DDC2	DDC1	DDC0	87
$13 ($33)	PINC	PINC7	PINC6	PINC5	PINC4	PINC3	PINC2	PINC1	PINC0	88
$12 ($32)	PORTD	PORTD7	PORTD6	PORTD5	PORTD4	PORTD3	PORTD2	PORTD1	PORTD0	88
$11 ($31)	DDRD	DDD7	DDD6	DDD5	DDD4	DDD3	DDD2	DDD1	DDD0	88
$10 ($30)	PIND	PIND7	PIND6	PIND5	PIND4	PIND3	PIND2	PIND1	PIND0	88
$0F ($2F)	SPDR	SPI Data Register								173
$0E ($2E)	SPSR	SPIF	WCOL	–	–	–	–	–	SPI2X	173
$0D ($2D)	SPCR	SPIE	SPE	DORD	MSTR	CPOL	CPHA	SPR1	SPR0	171
$0C ($2C)	UDR0	USART0 I/O Data Register								192
$0B ($2B)	UCSR0A	RXC0	TXC0	UDRE0	FE0	DOR0	UPE0	U2X0	MPCM0	193
$0A ($2A)	UCSR0B	RXCIE0	TXCIE0	UDRIE0	RXEN0	TXEN0	UCSZ02	RXB80	TXB80	194
$09 ($29)	UBRR0L	USART0 Baud Rate Register Low								197
$08 ($28)	ACSR	ACD	ACBG	ACO	ACI	ACIE	ACIC	ACIS1	ACIS0	231
$07 ($27)	ADMUX	REFS1	REFS0	ADLAR	MUX4	MUX3	MUX2	MUX1	MUX0	245
$06 ($26)	ADCSRA	ADEN	ADSC	ADFR	ADIF	ADIE	ADPS2	ADPS1	ADPS0	247
$05 ($25)	ADCH	ADC Data Register High Byte								248
$04 ($24)	ADCL	ADC Data Register Low byte								248
$03 ($23)	PORTE	PORTE7	PORTE6	PORTE5	PORTE4	PORTE3	PORTE2	PORTE1	PORTE0	88

5. Register Summary (Continued)

Address	Name	Bit 7	Bit 6	Bit 5	Bit 4	Bit 3	Bit 2	Bit 1	Bit 0	Page
$02 ($22)	DDRE	DDE7	DDE6	DDE5	DDE4	DDE3	DDE2	DDE1	DDE0	88
$01 ($21)	PINE	PINE7	PINE6	PINE5	PINE4	PINE3	PINE2	PINE1	PINE0	88
$00 ($20)	PINF	PINF7	PINF6	PINF5	PINF4	PINF3	PINF2	PINF1	PINF0	89

Notes: 1. For compatibility with future devices, reserved bits should be written to zero if accessed. Reserved I/O memory addresses should never be written.

2. Some of the status flags are cleared by writing a logical one to them. Note that the CBI and SBI instructions will operate on all bits in the I/O register, writing a one back into any flag read as set, thus clearing the flag. The CBI and SBI instructions work with registers $00 to $1F only.

6. Instruction Set Summary (Continued)

Mnemonics	Operands	Description	Operation	Flags	#Clocks
ARITHMETIC AND LOGIC INSTRUCTIONS					
ADD	Rd, Rr	Add two Registers	Rd ← Rd + Rr	Z,C,N,V,H	1
ADC	Rd, Rr	Add with Carry two Registers	Rd ← Rd + Rr + C	Z,C,N,V,H	1
ADIW	Rdl,K	Add Immediate to Word	Rdh:Rdl ← Rdh:Rdl + K	Z,C,N,V,S	2
SUB	Rd, Rr	Subtract two Registers	Rd ← Rd - Rr	Z,C,N,V,H	1
SUBI	Rd, K	Subtract Constant from Register	Rd ← Rd - K	Z,C,N,V,H	1
SBC	Rd, Rr	Subtract with Carry two Registers	Rd ← Rd - Rr - C	Z,C,N,V,H	1
SBCI	Rd, K	Subtract with Carry Constant from Reg.	Rd ← Rd - K - C	Z,C,N,V,H	1
SBIW	Rdl,K	Subtract Immediate from Word	Rdh:Rdl ← Rdh:Rdl - K	Z,C,N,V,S	2
AND	Rd, Rr	Logical AND Registers	Rd ← Rd • Rr	Z,N,V	1
ANDI	Rd, K	Logical AND Register and Constant	Rd ← Rd • K	Z,N,V	1
OR	Rd, Rr	Logical OR Registers	Rd ← Rd v Rr	Z,N,V	1
ORI	Rd, K	Logical OR Register and Constant	Rd ← Rd v K	Z,N,V	1
EOR	Rd, Rr	Exclusive OR Registers	Rd ← Rd ⊕ Rr	Z,N,V	1
COM	Rd	One's Complement	Rd ← $FF − Rd	Z,C,N,V	1
NEG	Rd	Two's Complement	Rd ← $00 − Rd	Z,C,N,V,H	1
SBR	Rd,K	Set Bit(s) in Register	Rd ← Rd v K	Z,N,V	1
CBR	Rd,K	Clear Bit(s) in Register	Rd ← Rd • ($FF - K)	Z,N,V	1
INC	Rd	Increment	Rd ← Rd + 1	Z,N,V	1
DEC	Rd	Decrement	Rd ← Rd − 1	Z,N,V	1
TST	Rd	Test for Zero or Minus	Rd ← Rd • Rd	Z,N,V	1
CLR	Rd	Clear Register	Rd ← Rd ⊕ Rd	Z,N,V	1
SER	Rd	Set Register	Rd ← $FF	None	1
MUL	Rd, Rr	Multiply Unsigned	R1:R0 ← Rd x Rr	Z,C	2
MULS	Rd, Rr	Multiply Signed	R1:R0 ← Rd x Rr	Z,C	2
MULSU	Rd, Rr	Multiply Signed with Unsigned	R1:R0 ← Rd x Rr	Z,C	2
FMUL	Rd, Rr	Fractional Multiply Unsigned	R1:R0 ← (Rd x Rr) << 1	Z,C	2
FMULS	Rd, Rr	Fractional Multiply Signed	R1:R0 ← (Rd x Rr) << 1	Z,C	2
FMULSU	Rd, Rr	Fractional Multiply Signed with Unsigned	R1:R0 ← (Rd x Rr) << 1	Z,C	2
BRANCH INSTRUCTIONS					
RJMP	k	Relative Jump	PC ← PC + k + 1	None	2
IJMP		Indirect Jump to (Z)	PC ← Z	None	2
JMP	k	Direct Jump	PC ← k	None	3
RCALL	k	Relative Subroutine Call	PC ← PC + k + 1	None	3
ICALL		Indirect Call to (Z)	PC ← Z	None	3
CALL	k	Direct Subroutine Call	PC ← k	None	4
RET		Subroutine Return	PC ← STACK	None	4
RETI		Interrupt Return	PC ← STACK	I	4
CPSE	Rd,Rr	Compare, Skip if Equal	if (Rd = Rr) PC ← PC + 2 or 3	None	1 / 2 / 3
CP	Rd,Rr	Compare	Rd − Rr	Z, N,V,C,H	1
CPC	Rd,Rr	Compare with Carry	Rd − Rr − C	Z, N,V,C,H	1
CPI	Rd,K	Compare Register with Immediate	Rd − K	Z, N,V,C,H	1
SBRC	Rr, b	Skip if Bit in Register Cleared	if (Rr(b)=0) PC ← PC + 2 or 3	None	1 / 2 / 3
SBRS	Rr, b	Skip if Bit in Register is Set	if (Rr(b)=1) PC ← PC + 2 or 3	None	1 / 2 / 3
SBIC	P, b	Skip if Bit in I/O Register Cleared	if (P(b)=0) PC ← PC + 2 or 3	None	1 / 2 / 3
SBIS	P, b	Skip if Bit in I/O Register is Set	if (P(b)=1) PC ← PC + 2 or 3	None	1 / 2 / 3
BRBS	s, k	Branch if Status Flag Set	if (SREG(s) = 1) then PC←PC+k + 1	None	1 / 2
BRBC	s, k	Branch if Status Flag Cleared	if (SREG(s) = 0) then PC←PC+k + 1	None	1 / 2
BREQ	k	Branch if Equal	if (Z = 1) then PC ← PC + k + 1	None	1 / 2
BRNE	k	Branch if Not Equal	if (Z = 0) then PC ← PC + k + 1	None	1 / 2
BRCS	k	Branch if Carry Set	if (C = 1) then PC ← PC + k + 1	None	1 / 2
BRCC	k	Branch if Carry Cleared	if (C = 0) then PC ← PC + k + 1	None	1 / 2
BRSH	k	Branch if Same or Higher	if (C = 0) then PC ← PC + k + 1	None	1 / 2
BRLO	k	Branch if Lower	if (C = 1) then PC ← PC + k + 1	None	1 / 2
BRMI	k	Branch if Minus	if (N = 1) then PC ← PC + k + 1	None	1 / 2
BRPL	k	Branch if Plus	if (N = 0) then PC ← PC + k + 1	None	1 / 2
BRGE	k	Branch if Greater or Equal, Signed	if (N ⊕ V= 0) then PC ← PC + k + 1	None	1 / 2
BRLT	k	Branch if Less Than Zero, Signed	if (N ⊕ V= 1) then PC ← PC + k + 1	None	1 / 2
BRHS	k	Branch if Half Carry Flag Set	if (H = 1) then PC ← PC + k + 1	None	1 / 2
BRHC	k	Branch if Half Carry Flag Cleared	if (H = 0) then PC ← PC + k + 1	None	1 / 2
BRTS	k	Branch if T Flag Set	if (T = 1) then PC ← PC + k + 1	None	1 / 2
BRTC	k	Branch if T Flag Cleared	if (T = 0) then PC ← PC + k + 1	None	1 / 2

6. Instruction Set Summary (Continued)

BRVS	k	Branch if Overflow Flag is Set	if (V = 1) then PC ← PC + k + 1	None	1 / 2
BRVC	k	Branch if Overflow Flag is Cleared	if (V = 0) then PC ← PC + k + 1	None	1 / 2
Mnemonics	**Operands**	**Description**	**Operation**	**Flags**	**#Clocks**
BRIE	k	Branch if Interrupt Enabled	if (I = 1) then PC ← PC + k + 1	None	1 / 2
BRID	k	Branch if Interrupt Disabled	if (I = 0) then PC ← PC + k + 1	None	1 / 2
DATA TRANSFER INSTRUCTIONS					
MOV	Rd, Rr	Move Between Registers	Rd ← Rr	None	1
MOVW	Rd, Rr	Copy Register Word	Rd+1:Rd ← Rr+1:Rr	None	1
LDI	Rd, K	Load Immediate	Rd ← K	None	1
LD	Rd, X	Load Indirect	Rd ← (X)	None	2
LD	Rd, X+	Load Indirect and Post-Inc.	Rd ← (X), X ← X + 1	None	2
LD	Rd, - X	Load Indirect and Pre-Dec.	X ← X - 1, Rd ← (X)	None	2
LD	Rd, Y	Load Indirect	Rd ← (Y)	None	2
LD	Rd, Y+	Load Indirect and Post-Inc.	Rd ← (Y), Y ← Y + 1	None	2
LD	Rd, - Y	Load Indirect and Pre-Dec.	Y ← Y - 1, Rd ← (Y)	None	2
LDD	Rd,Y+q	Load Indirect with Displacement	Rd ← (Y + q)	None	2
LD	Rd, Z	Load Indirect	Rd ← (Z)	None	2
LD	Rd, Z+	Load Indirect and Post-Inc.	Rd ← (Z), Z ← Z+1	None	2
LD	Rd, -Z	Load Indirect and Pre-Dec.	Z ← Z - 1, Rd ← (Z)	None	2
LDD	Rd, Z+q	Load Indirect with Displacement	Rd ← (Z + q)	None	2
LDS	Rd, k	Load Direct from SRAM	Rd ← (k)	None	2
ST	X, Rr	Store Indirect	(X) ← Rr	None	2
ST	X+, Rr	Store Indirect and Post-Inc.	(X) ← Rr, X ← X + 1	None	2
ST	- X, Rr	Store Indirect and Pre-Dec.	X ← X - 1, (X) ← Rr	None	2
ST	Y, Rr	Store Indirect	(Y) ← Rr	None	2
ST	Y+, Rr	Store Indirect and Post-Inc.	(Y) ← Rr, Y ← Y + 1	None	2
ST	- Y, Rr	Store Indirect and Pre-Dec.	Y ← Y - 1, (Y) ← Rr	None	2
STD	Y+q,Rr	Store Indirect with Displacement	(Y + q) ← Rr	None	2
ST	Z, Rr	Store Indirect	(Z) ← Rr	None	2
ST	Z+, Rr	Store Indirect and Post-Inc.	(Z) ← Rr, Z ← Z + 1	None	2
ST	-Z, Rr	Store Indirect and Pre-Dec.	Z ← Z - 1, (Z) ← Rr	None	2
STD	Z+q,Rr	Store Indirect with Displacement	(Z + q) ← Rr	None	2
STS	k, Rr	Store Direct to SRAM	(k) ← Rr	None	2
LPM		Load Program Memory	R0 ← (Z)	None	3
LPM	Rd, Z	Load Program Memory	Rd ← (Z)	None	3
LPM	Rd, Z+	Load Program Memory and Post-Inc	Rd ← (Z), Z ← Z+1	None	3
ELPM		Extended Load Program Memory	R0 ← (RAMPZ:Z)	None	3
ELPM	Rd, Z	Extended Load Program Memory	Rd ← (RAMPZ:Z)	None	3
ELPM	Rd, Z+	Extended Load Program Memory and Post-Inc	Rd ← (RAMPZ:Z), RAMPZ:Z ← RAMPZ:Z+1	None	3
SPM		Store Program Memory	(Z) ← R1:R0	None	-
IN	Rd, P	In Port	Rd ← P	None	1
OUT	P, Rr	Out Port	P ← Rr	None	1
PUSH	Rr	Push Register on Stack	STACK ← Rr	None	2
POP	Rd	Pop Register from Stack	Rd ← STACK	None	2
BIT AND BIT-TEST INSTRUCTIONS					
SBI	P,b	Set Bit in I/O Register	I/O(P,b) ← 1	None	2
CBI	P,b	Clear Bit in I/O Register	I/O(P,b) ← 0	None	2
LSL	Rd	Logical Shift Left	Rd(n+1) ← Rd(n), Rd(0) ← 0	Z,C,N,V	1
LSR	Rd	Logical Shift Right	Rd(n) ← Rd(n+1), Rd(7) ← 0	Z,C,N,V	1
ROL	Rd	Rotate Left Through Carry	Rd(0)←C,Rd(n+1)← Rd(n),C←Rd(7)	Z,C,N,V	1
ROR	Rd	Rotate Right Through Carry	Rd(7)←C,Rd(n)← Rd(n+1),C←Rd(0)	Z,C,N,V	1
ASR	Rd	Arithmetic Shift Right	Rd(n) ← Rd(n+1), n=0:6	Z,C,N,V	1
SWAP	Rd	Swap Nibbles	Rd(3:0)←Rd(7:4),Rd(7:4)←Rd(3:0)	None	1
BSET	s	Flag Set	SREG(s) ← 1	SREG(s)	1
BCLR	s	Flag Clear	SREG(s) ← 0	SREG(s)	1
BST	Rr, b	Bit Store from Register to T	T ← Rr(b)	T	1
BLD	Rd, b	Bit load from T to Register	Rd(b) ← T	None	1
SEC		Set Carry	C ← 1	C	1
CLC		Clear Carry	C ← 0	C	1
SEN		Set Negative Flag	N ← 1	N	1
CLN		Clear Negative Flag	N ← 0	N	1
SEZ		Set Zero Flag	Z ← 1	Z	1
CLZ		Clear Zero Flag	Z ← 0	Z	1
SEI		Global Interrupt Enable	I ← 1	I	1
CLI		Global Interrupt Disable	I ← 0	I	1

6. Instruction Set Summary (Continued)

SES		Set Signed Test Flag	S ← 1	S	1
CLS		Clear Signed Test Flag	S ← 0	S	1
Mnemonics	**Operands**	**Description**	**Operation**	**Flags**	**#Clocks**
SEV		Set Twos Complement Overflow.	V ← 1	V	1
CLV		Clear Twos Complement Overflow	V ← 0	V	1
SET		Set T in SREG	T ← 1	T	1
CLT		Clear T in SREG	T ← 0	T	1
SEH		Set Half Carry Flag in SREG	H ← 1	H	1
CLH		Clear Half Carry Flag in SREG	H ← 0	H	1
MCU CONTROL INSTRUCTIONS					
NOP		No Operation		None	1
SLEEP		Sleep	(see specific descr. for Sleep function)	None	1
WDR		Watchdog Reset	(see specific descr. for WDR/timer)	None	1
BREAK		Break	For On-chip Debug Only	None	N/A

7. Ordering Information

7.1 ATmega128A

Speed (MHz)	Power Supply	Ordering Code[2]	Package[1]	Operation Range
16	2.7 - 5.5V	ATmega128A-AU ATmega128A-AUR[3] ATmega128A-MU ATmega128A-MUR[3]	64A 64A 64M1 64M1	Industrial (-40°C to 85°C)

Notes:
1. The device can also be supplied in wafer form. Please contact your local Atmel sales office for detailed ordering information and minimum quantities.
2. Pb-free packaging complies to the European Directive for Restriction of Hazardous Substances (RoHS directive). Also Halide free and fully Green.
3. Tape & Reel

Package Type	
64A	64-lead, 14 x 14 x 1.0 mm, Thin Profile Plastic Quad Flat Package (TQFP)
64M1	64-pad, 9 x 9 x 1.0 mm, Quad Flat No-Lead/Micro Lead Frame Package (QFN/MLF)

8. Packaging Information

8.1 64A

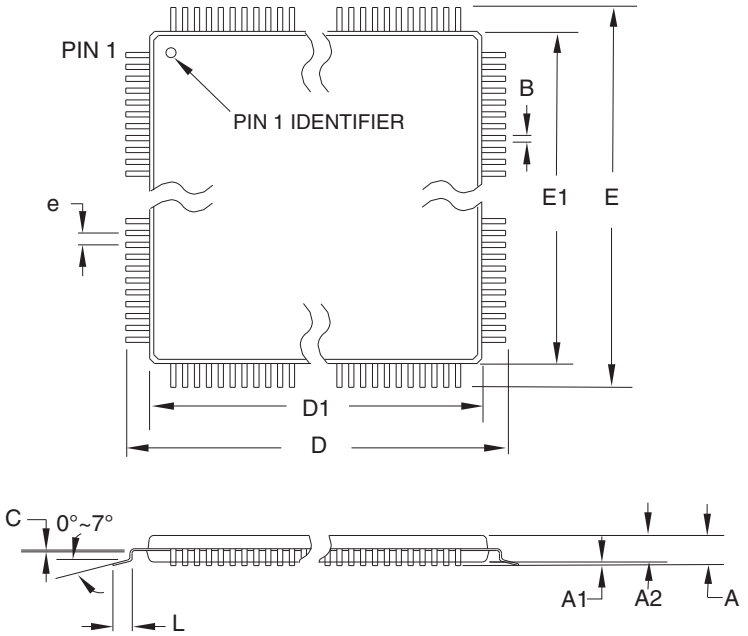

COMMON DIMENSIONS
(Unit of Measure = mm)

SYMBOL	MIN	NOM	MAX	NOTE
A	–	–	1.20	
A1	0.05	–	0.15	
A2	0.95	1.00	1.05	
D	15.75	16.00	16.25	
D1	13.90	14.00	14.10	Note 2
E	15.75	16.00	16.25	
E1	13.90	14.00	14.10	Note 2
B	0.30	–	0.45	
C	0.09	–	0.20	
L	0.45	–	0.75	
e	0.80 TYP			

Notes:
1. This package conforms to JEDEC reference MS-026, Variation AEB.
2. Dimensions D1 and E1 do not include mold protrusion. Allowable protrusion is 0.25 mm per side. Dimensions D1 and E1 are maximum plastic body size dimensions including mold mismatch.
3. Lead coplanarity is 0.10 mm maximum.

10/5/2001

	TITLE	DRAWING NO.	REV.
2325 Orchard Parkway San Jose, CA 95131	**64A,** 64-lead, 14 x 14 mm Body Size, 1.0 mm Body Thickness, 0.8 mm Lead Pitch, Thin Profile Plastic Quad Flat Package (TQFP)	64A	B

8.2 64M1

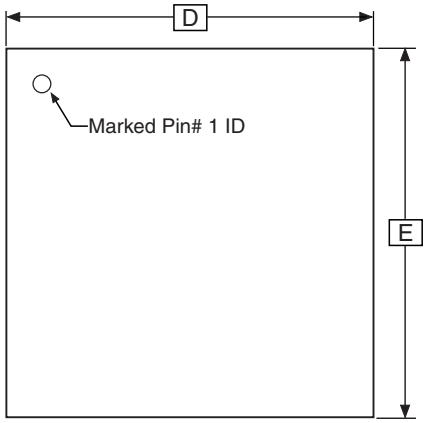

TOP VIEW

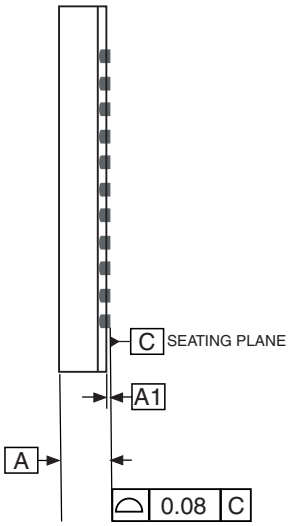

SIDE VIEW

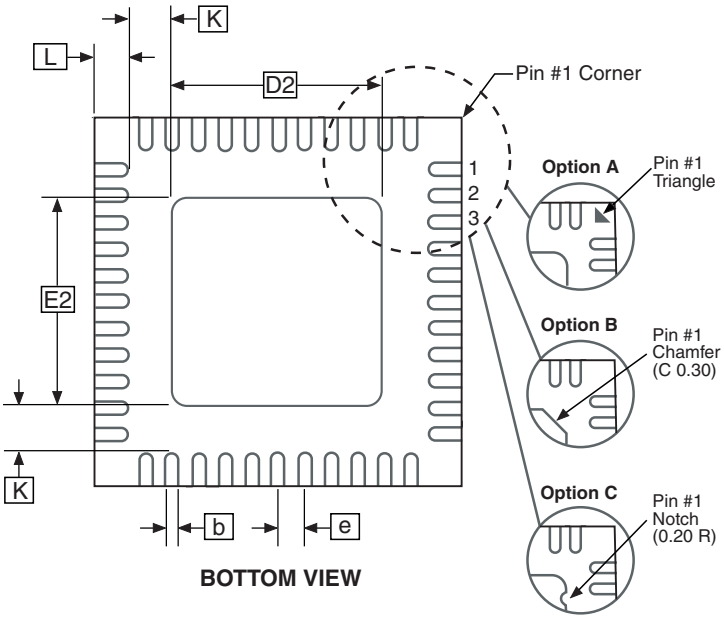

BOTTOM VIEW

COMMON DIMENSIONS
(Unit of Measure = mm)

SYMBOL	MIN	NOM	MAX	NOTE
A	0.80	0.90	1.00	
A1	–	0.02	0.05	
b	0.18	0.25	0.30	
D	8.90	9.00	9.10	
D2	5.20	5.40	5.60	
E	8.90	9.00	9.10	
E2	5.20	5.40	5.60	
e	0.50 BSC			
L	0.35	0.40	0.45	
K	1.25	1.40	1.55	

Note: 1. JEDEC Standard MO-220, (SAW Singulation) Fig. 1, VMMD.
2. Dimension and tolerance conform to ASMEY14.5M-1994.

5/25/06

	TITLE	DRAWING NO.	REV.
2325 Orchard Parkway San Jose, CA 95131	**64M1**, 64-pad, 9 x 9 x 1.0 mm Body, Lead Pitch 0.50 mm, 5.40 mm Exposed Pad, Micro Lead Frame Package (MLF)	64M1	G

9. Errata

The revision letter in this section refers to the revision of the ATmega128A device.

9.1 ATmega128A Rev. U

- **Wrong value for Version in the JTAG Device Identification Register**
- **First Analog Comparator conversion may be delayed**
- **Interrupts may be lost when writing the timer registers in the asynchronous timer**
- **Stabilizing time needed when changing XDIV Register**
- **Stabilizing time needed when changing OSCCAL Register**
- **IDCODE masks data from TDI input**
- **Reading EEPROM by using ST or STS to set EERE bit triggers unexpected interrupt request**

1. **First Analog Comparator conversion may be delayed**

   If the device is powered by a slow rising V_{CC}, the first Analog Comparator conversion will take longer than expected on some devices.

   Problem Fix/Workaround

   When the device has been powered or reset, disable then enable the Analog Comparator before the first conversion.

2. **Interrupts may be lost when writing the timer registers in the asynchronous timer**

   The interrupt will be lost if a timer register that is synchronous timer clock is written when the asynchronous Timer/Counter register (TCNTx) is 0x00.

   Problem Fix/Workaround

   Always check that the asynchronous Timer/Counter register neither have the value 0xFF nor 0x00 before writing to the asynchronous Timer Control Register (TCCRx), asynchronous Timer Counter Register (TCNTx), or asynchronous Output Compare Register (OCRx).

3. **Stabilizing time needed when changing XDIV Register**

   After increasing the source clock frequency more than 2% with settings in the XDIV register, the device may execute some of the subsequent instructions incorrectly.

   Problem Fix / Workaround

   The NOP instruction will always be executed correctly also right after a frequency change. Thus, the next 8 instructions after the change should be NOP instructions. To ensure this, follow this procedure:

   1. Clear the I bit in the SREG Register.
   2. Set the new pre-scaling factor in XDIV register.
   3. Execute 8 NOP instructions
   4. Set the I bit in SREG

   This will ensure that all subsequent instructions will execute correctly.

   Assembly Code Example:

```
CLI                 ; clear global interrupt enable
OUT  XDIV, temp     ; set new prescale value
NOP                 ; no operation
NOP                 ; no operation
NOP                 ; no operation
```

```
NOP                ; no operation
NOP                ; no operation
NOP                ; no operation
NOP                ; no operation
NOP                ; no operation
SEI                ; set global interrupt enable
```

4. **Stabilizing time needed when changing OSCCAL Register**

   After increasing the source clock frequency more than 2% with settings in the OSCCAL register, the device may execute some of the subsequent instructions incorrectly.

   Problem Fix / Workaround

   The behavior follows errata number 3., and the same Fix / Workaround is applicable on this errata.

5. **IDCODE masks data from TDI input**

   The JTAG instruction IDCODE is not working correctly. Data to succeeding devices are replaced by all-ones during Update-DR.

   Problem Fix / Workaround

   – If ATmega128A is the only device in the scan chain, the problem is not visible.
   – Select the Device ID Register of the ATmega128A by issuing the IDCODE instruction or by entering the Test-Logic-Reset state of the TAP controller to read out the contents of its Device ID Register and possibly data from succeeding devices of the scan chain. Issue the BYPASS instruction to the ATmega128A while reading the Device ID Registers of preceding devices of the boundary scan chain.
   – If the Device IDs of all devices in the boundary scan chain must be captured simultaneously, the ATmega128A must be the fist device in the chain.

6. **Reading EEPROM by using ST or STS to set EERE bit triggers unexpected interrupt request.**

   Reading EEPROM by using the ST or STS command to set the EERE bit in the EECR register triggers an unexpected EEPROM interrupt request.

   Problem Fix / Workaround

   Always use OUT or SBI to set EERE in EECR.

10. Datasheet Revision History

Please note that the referring page numbers in this section are referred to this document. The referring revision in this section are referring to the document revision.

10.1 Rev. 8151G – 07/10

1. Updated the table note of Table 27-3 on page 324. The test is performed using BODLEVEL=0 and BODLEVEL=1

10.2 Rev. 8151F – 06/10

1. Inserted cross reference in "Minimizing Power Consumption" on page 48
2. Updated Technical Terminology according to Atmel standard
3. Note 6 and Note 7 below "Two-wire Serial Bus Requirements" on page 325 have been removed
4. The text in "Bit 6 – TXCIEn: TX Complete Interrupt Enable" on page 194 has been corrected by adding an "n"

10.3 Rev. 8151E – 02/10

1. Updated "Receiving Frames with 9 Data Bits" on page 185. The C code updated.
2. Updated "Packaging Information" on page 373.
3. Updated "Performing Page Erase by SPM" on page 283.

10.4 Rev. 8151D – 07/09

1. Updated "Errata" on page 376.
2. Updated the last page with Atmel's new addresses.

10.5 Rev. 8151C – 05/09

1. Updated "Errata" on page 375. ATmega128A Rev. U.

10.6 Rev. 8151B – 03/09

1. Updated view of "Typical Characteristics" on page 337 view.
2. Editorial updates.

10.7 Rev. 8151A– 08/08

1. Initial revision. (Based on the ATmega128/L datasheet 2467R-AVR-06/08)

   Changes done compared to the ATmega128/L datasheet 2467R-AVR-06/08:
   - Updated "Stack Pointer" on page 13 description.
   - "Power Management and Sleep Modes" on page 46 is reorganized.
   - All Electrical characteristics is moved to "Electrical Characteristics" on page 321.
   - Output Low Voltage (V_{OL}) and Reset Pull-up Resistor (R_{RST}) limits updated in "DC Characteristics" on page 321.
   - Register descriptions are moved to sub sections at the end of each chapter.
   - New graphs in "Typical Characteristics" on page 338.
   - New "Ordering Information" on page 373.

Headquarters

Atmel Corporation
2325 Orchard Parkway
San Jose, CA 95131
USA
Tel: 1(408) 441-0311
Fax: 1(408) 487-2600

International

Atmel Asia
Unit 1-5 & 16, 19/F
BEA Tower, Millennium City 5
418 Kwun Tong Road
Kwun Tong, Kowloon
Hong Kong
Tel: (852) 2245-6100
Fax: (852) 2722-1369

Atmel Europe
Le Krebs
8, Rue Jean-Pierre Timbaud
BP 309
78054 Saint-Quentin-en-
Yvelines Cedex
France
Tel: (33) 1-30-60-70-00
Fax: (33) 1-30-60-71-11

Atmel Japan
9F, Tonetsu Shinkawa Bldg.
1-24-8 Shinkawa
Chuo-ku, Tokyo 104-0033
Japan
Tel: (81) 3-3523-3551
Fax: (81) 3-3523-7581

Product Contact

Web Site
www.atmel.com

Technical Support
avr@atmel.com

Sales Contact
www.atmel.com/contacts

Literature Requests
www.atmel.com/literature

Disclaimer: The information in this document is provided in connection with Atmel products. No license, express or implied, by estoppel or otherwise, to any intellectual property right is granted by this document or in connection with the sale of Atmel products. **EXCEPT AS SET FORTH IN ATMEL'S TERMS AND CONDITIONS OF SALE LOCATED ON ATMEL'S WEB SITE, ATMEL ASSUMES NO LIABILITY WHATSOEVER AND DISCLAIMS ANY EXPRESS, IMPLIED OR STATUTORY WARRANTY RELATING TO ITS PRODUCTS INCLUDING, BUT NOT LIMITED TO, THE IMPLIED WARRANTY OF MERCHANTABILITY, FITNESS FOR A PARTICULAR PURPOSE, OR NON-INFRINGEMENT. IN NO EVENT SHALL ATMEL BE LIABLE FOR ANY DIRECT, INDIRECT, CONSEQUENTIAL, PUNITIVE, SPECIAL OR INCIDENTAL DAMAGES (INCLUDING, WITHOUT LIMITATION, DAMAGES FOR LOSS OF PROFITS, BUSINESS INTERRUPTION, OR LOSS OF INFORMATION) ARISING OUT OF THE USE OR INABILITY TO USE THIS DOCUMENT, EVEN IF ATMEL HAS BEEN ADVISED OF THE POSSIBILITY OF SUCH DAMAGES.** Atmel makes no representations or warranties with respect to the accuracy or completeness of the contents of this document and reserves the right to make changes to specifications and product descriptions at any time without notice. Atmel does not make any commitment to update the information contained herein. Unless specifically provided otherwise, Atmel products are not suitable for, and shall not be used in, automotive applications. Atmel's products are not intended, authorized, or warranted for use as components in applications intended to support or sustain life.

© 2010 Atmel Corporation. All rights reserved. Atmel®, Atmel logo and combinations thereof, AVR®, AVR® logo and others are registered trademarks or trademarks of Atmel Corporation or its subsidiaries. Other terms and product names may be trademarks of others.

8151GS–AVR–07/10